STATE OF ILLINOIS
COUNTY OF LAKE
PLANS FOR PROPOSED IMPROVEMENTS OF
21ST STREET, KENOSHA ROAD & WADSWORTH ROAD
SECTION 15-00999-18-RS

INDEX OF SHEETS

SHEET No.	DESCRIPTION
1	COVER SHEET
2 - 4	GENERAL NOTES
5	COMPOSITE SUMMARY OF QUANTITES
66 - 68	BUTT JOINT DETAILS
73 - 91	LCDOT DETAILS
92 - 128	IDOT DETAILS

SECTION 146 - 21ST STREET GREEN BAY TO KENOSHA RD

RESURFACING	6	SUMMARY OF QUANTITES	RESURFACING
	7 - 12	SCHEDULE OF QUANTITES	
	13	TYPICAL SECTIONS	
	14 - 16	TRAFFIC CONTROL PLAN	
	17 - 19	REMOVE / REPAIR SHEETS	
	20 - 22	PAVEMENT MARKING PLANS	
WIDENING	23 - 25	TYPICAL SECTION	WIDENING
	26	ALIGNMENT & TIES	
	27 - 28	REMOVAL PLANS	
	29 - 32	PLAN & PROFILE	
	33	EROSION CONTORL PLAN	
	34 - 35	PAVEMENT MARKINGS PLANS	
	36 - 48	CROSS SECTIONS	

SECTION 125 - KENOSHA ROAD GREEN BAY TO 21st STREET

RESURFACING	49	SUMMARY OF QUANTITES	RESURFACING
	50 - 54	SCHEDULE OF QUANTITES	
	55	TYPICAL SECTIONS	
	56 - 57	TRAFFIC CONTROL PLAN	
	58 - 61	REMOVE / REPAIR SHEETS	
	62 - 65	PAVEMENT MARKINGS PLANS	

SECTION 55 - WADSWORTH ROAD AT SHERIDAN

MEDIAN IMP.	69	SUMMARY/ SCHEDULE OF QUANTITES	MEDIAN IMP.
	70 - 71	TRAFFIC CONTROL PLAN	
	72	LANDSCAPING DETAILS	

HOT-MIX ASPHALT MIXTURE REQUIREMENTS

MIXTURE TYPE	AC TYPE	AIR VOIDS
HOT-MIX ASPHALT SURFACE COURSE, MIX "D", N50	PG 64-22	4% = 50 GYRATION
HOT-MIX ASPHALT BINDER COURSE, IL-19.0, N50	PG 64-22	4% = 50 GYRATION
LEVELING BINDER (MACHINE METHOD), N50	PG 64-22	4% = 50 GYRATION

THE UNIT WEIGHT USED TO CALCULATE ALL HMA SURFACE MIXTURE QUANTITIES IS 112 LBS/SQ YD/IN.

IDOT HIGHWAY STANDARDS

000001-06 (8 SHTS)	442201-03	542301-03
604201-03	602406-07	602601-04
602701-02	604001-04	604036-03
606001-06	701001-02	701006-05
701101-05	701201-04	701301-04
701306-03	701311-03	701326-04
701427-04	701501-06	701502-06
701601-09	701901-05	

LAKE COUTY STANDARDS DETAILS

LC0020	LC2000	LC2050	LC2051
LC3000	LC4100	LC4103	LC4110
LC4111	LC4120	LC4202	LC4810
LC5402	LC5403	LC6000	LC6003
LC6020	LC7000	LC7003	LC7004
LC7005	LC7200	LC7800	LC7802

PROJECT LOCATION

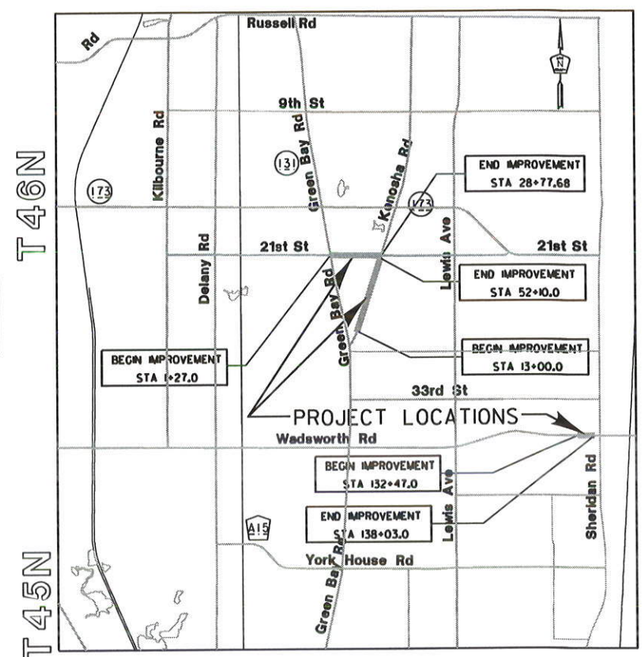

ROAD	STATION	STATION	LENGTH (FT.)	LENGTH (MI.)
21ST STREET	1+27.00	28+77.68	2750.68	0.521
KENOSHA ROAD	13+00.00	52+10.00	3910.00	0.741
WADSWORTH ROAD	132+47.00	138+03.00	556.00	0.105
NET LENGTH OF IMPROVEMENT			7216.68	1.367

21ST ST/KENOSHA RD/WADSWORTH RD | 15-00999-18-RS

KEVIN J. CARRIER
062-061626
LICENSED PROFESSIONAL ENGINEER
STATE OF ILLINOIS

FOR UNDERGROUND UTILITY LOCATIONS, CALL

J. U. L. I. E.

TOLL FREE

800-892-0123

BUILDING LAKE COUNTY'S EFFECTIVE TRANSPORTATION SYSTEM TODAY

APPROVED
DEPARTMENT OF TRANSPORTATION

DATE March 16TH 2016

P. J. Rugg/BG
Regional Engineer

County Engineer
On behalf of IDOT pursuant to Agreement of Understanding dated January 18, 2013

Plans Prepared By: LakeCounty Division of Transportation

Signature: K-A
Date: 3/16/16
Illinois License No: 062-061626
Expiration Date: 11/30/17
Field: CIVIL
Approved By: P. J. Rugg/BG County Engineer
Date: 3/16/16

REVISIONS / REMARKS					
NO.	DESCRIPTION	DATE	BY	SURVEYOR:	__/__
		__/__/__		DSGNR/LIAISON:	
		__/__/__		PLOTTED BY: HDI8574 3/10/2016	

21ST STREET/KENOSHA RD/WADSWORTH RD
COVER SHEET

ROUTE	SECTION	SECTION NUMBER	SHEET	SHEETS
CH17 CH53 CH67	55 125 146	15-00999-18-RS	1	128

FILE NAME: U:\Design\Shrestha\15-00999-18-RS 21st Street Resurfacing (131 to Kenosha Rd)\B-00999$Sheet_0001_Cover_Sheet.dgn

GENERAL NOTES

LCDOT GENERAL NOTES
(Revised 1/5/15)

1. GENERAL

a. All construction shall be done according to the State of Illinois "Standard Specifications for Road and Bridge Construction" adopted April 1, 2016; the "Supplemental Specifications and Recurring Special Provisions, adopted April 1, 2016; the latest edition of the "Illinois Manual on Uniform Traffic Control devices for Streets and Highways" "The Standard Specifications for Water and Sewer Main Construction in Illinois"January 2014 seventh edition; the details in these plans, and the Special Provisions included in the contract documents.

b. The Contractor shall notify the Engineer at least 72 hours prior to beginning work and shall coordinate all construction operations with the Engineer.

c. The Contractor shall coordinate his/her work with any adjacent projects that are or may be under construction.

d. The Contractor shall verify all dimensions and existing conditions in the field prior to ordering materials and beginning construction. Where new work is proposed to meet existing features, it shall be the Contractor's responsibility to field check all dimensions and elevations and notify the Engineer of discrepancies before proceeding with construction.

e. The Contractor shall provide access to abutting properties at all times during construction, except for brief periods of interruption. The Contractor shall notify the property owner no less than 24 hours in advance of the interruption of access and/or services. The notification will include the time and duration of the interruption. The cost to provide access shall be paid for and included in the cost of TRAFFIC CONTROL AND PROTECTION (SPECIAL)

2. SURVEY

a. All elevations shown on these plans are based upon the North American Vertical Datum of 1988 (NAVD 88). The elevations shown on the plans are for finished grades unless otherwise noted.

b. Where section or subsection monuments are encountered, the Engineer shall be notified before the monuments are removed. The Contractor shall carefully preserve all property marks and monuments until the owner, authorized surveyor or agent has witnessed or otherwise referenced their location.

c. All radii for proposed curb and gutter are to the edge of pavement unless otherwise noted.

3. REMOVAL

a. The Contractor shall saw cut the existing pavement, concrete curb & gutter, median, hot-mix asphalt shoulder; sidewalk; and/or other appurtenances as shown on the plans, to separate the existing material to be removed, by means of an approved concrete saw to a depth shown on the plans or as directed by the Engineer. This work shall be included in the cost of the item being removed.

The Contractor shall be required to saw vertical cuts so as to form clean vertical joints. Should the Contractor deface any edge, a new sawed joint shall be provided and any additional work, including removal and replacement, shall be done at the Contractor's expense.

b. All excess material shall be disposed of offsite on the day it is excavated or removed.

c. The Contractor is prohibited from burning any material within or adjacent to the project limits. All excess or waste material shall be hauled away from the project site by the contractor and legally disposed of outside the right-of-way. No extra compensation will be allowed the contractor for any expense incurred by complying with the requirements of this note.

4. DRAINAGE

a. The cost of connecting existing storm sewers to the proposed drainage system shall be included in the unit cost of the proposed drainage structure. The cost of connecting proposed storm sewer to existing structures shall be included in the unit cost of the proposed storm sewer. Additional pipe required to complete the connections will be paid for at the contract unit price for "STORM SEWER" of the type, size and class required.

b. Unless otherwise noted on the plans, the existing drainage facilities shall remain in use during the period of construction. During construction operations the Contractor shall ensure positive site drainage at the conclusion of each day. Site drainage may be achieved by ditching, pumping, or any other method acceptable to the Engineer.

c. The Contractor shall confirm all existing storm sewer pipe sizes and inverts prior to ordering structures. Any modification of structures due to the failure of the Contractor to perform this task shall be at the Contractor's expense and may lead to the rejection of the structure in the field if the modification is not approved by the Engineer.

d. If during construction, the Contractor encounters or otherwise becomes aware of any sewers or underdrains within the right-of-way other than those shown on the plans, he/she shall inform the Engineer, who shall direct the work necessary to maintain or replace the facilities in service and to protect them from damage during construction if maintained. Existing facilities to be maintained that are damaged because of non-compliance with this provision shall be replaced at the C ontractor's own expense. Should the Engineer direct the replacement of a facility, the necessary work and payment shall be according to Sections 550 and 601, and Article 104.02 of the "Standard Specifications".

GENERAL NOTES

e. When existing drainage facilities are disturbed, the contractor shall provide and maintain temporary outlets and connections for all private or public drains, culverts, sewers or catch basins. The Contractor shall provide facilities to take in all storm water which will be received by these drains and sewers and discharge the same. The Contractor shall provide and maintain an efficient pumping plant, if necessary, and a temporary outlet. The Contractor shall be prepared at all times to dispose of the water received from temporary connections until such time as the permanent connections with sewer are built and in service. This work will not be paid for separately, but shall be included in the cost of the storm sewers and drainage structures installed as part of this project.

f. The Contractor shall determine when flat slab tops are required on manholes and catch basins. Restricted depth manholes and catch basins shall be constructed according to LCDOT standard LC6000. Sumps, where required, will be included in the unit price of the restricted depth structure. No additional compensation shall be allowed for the use of flat slab tops.

g. All existing drainage facilities, headwalls and fences no longer required, in the opinion of the Engineer, shall be removed. The cost of removal of existing pipe culverts, storm sewers, drainage structures, concrete headwalls, fencing or other obstructions which interfere with the proposed improvements and which are not shown to be removed as a separate pay item shall be considered included in the cost of EARTH EXCAVATION.

h. During the construction operation when any loose material is deposited in the flow line of ditches, gutters or drainage structures so the natural flow of water is obstructed, the material shall be removed at the close of each working day.

At the conclusion of the construction operations all drainage structures shall be free from all dirt and debris. This work will not be paid for separately but shall be considered included in the unit costs of the various Temporary Erosion Control Systems e.g. INLET FILTERS, INLET PROTECTION SPECIAL, TEMPORARY DITCH CHECKS, etc...

i. Top of frame (rim) elevations shown on the plans are only to assist the Contractor in determining the approximate overall height of the structure. Frames on all new structures shall be adjusted to the final elevations of the areas in which they are located as part of the structure cost. Any plating of the structure required for staged construction shall be included in the cost of the structure.

j. Unless otherwise noted, locations shown on the plans are to the edge of pavement for structures in the curb and to the center of the structure for all other structures. All top of frame (rim) elevations for structures located in the curb and gutter are at the edge of pavement. See the LCDOT detail for Drainage Structure Rim Elevations and Offsets LC6003. Drainage structure flat-tops and cones shall be turned so that the frames are closest to the centerline of the lane unless otherwise noted. All flat-tops and cones are assumed to be eccentric unless otherwise noted.

k. Stations, offsets, and invert elevations for flared end sections are given at the centerline of the outlet end of the flared end section. The flared end section shall be installed at the same slope as the outlet pipe.

l. All frames with closed lids to be furnished as part of this contract, for the construction, adjustment or reconstruction of manholes, catch basins, inlets, valve vaults, or meter vaults shall have cast into the lid one of the following words: Lids for storm sewer structures shall bear the word STORM. Lids for sanitary sewer structures shall bear the word SANITARY. Lids for water system structures shall bear the word WATER. Additionally open grates or lids shall include the wording DUMP NO WASTE, DRAINS TO WATERWAYS. This work shall be included in the unit cost of the structure being constructed, adjusted or reconstructed.

m. Hot-mix asphalt or concrete pavement crossings shall not be left in gravel overnight. This will include the main road, side streets, private entrances, commercial entrances and parking areas. Temporary hot-mix asphalt patching or steel plates (see steel plate special provision) at the Contractor's expense may be used in lieu of immediate pavement replacement.

n. Temporary sheeting or bracing for sewer trenches that may be required shall be the responsibility of the Contractor. The cost of this work shall be included in the proposed drainage and/or utility unit prices and no additional compensation will be allowed.

o. At locations where the proposed storm sewer crosses over utilities, a 4" Styrofoam cushion shall be placed under the storm sewer when directed to do so by the Engineer. This work shall be included in the unit price for the proposed storm sewer.

p. All field tile encountered during construction operations shall be connected to the proposed storm sewer or extended to outlet into a proposed drainage way. If this cannot be accomplished, then it shall be repaired with new pipe of similar size and material to the original line and put in acceptable operating condition. A record of the location of all field tile or on-site drain pipe encountered shall be kept by the contractor and turned over to the engineer upon completion of the project. An estimated quantity of PIPE DRAINS, 4" and PIPE DRAINS, 6" has been included for this work.

q. Precast concrete adjustment rings, maximum of 12" in height, will be allowed in the adjustment or reconstruction of catch basin, manhole, inlet and valve vault structures. HDPE plastic and recycled rubber adjusting rings may be used according to Section 602 of the “Standard Specifications”. Common brick will not be allowed. All type 8 grates on drainage structures shall be adjusted to plan grade with 4" minimum concrete adjustment rings. The rings shall be included in the cost of the structure.

r. Couplings used for connections of new pipe to existing pipe and where dissimilar pipe and joint materials are encountered shall be approved by the Engineer prior to installation. No stainless steel shear rings will be allowed. This work will not be paid for separately, but shall be included in the cost of the storm sewer being installed.

5. DRIVEWAYS and ENTRANCES

a. Existing hot-mix asphalt, concrete, and gravel driveways and entrances shall be re-surfaced to one foot inside the right-of-way with hot-mix asphalt surface course as scheduled on the plans.

GENERAL NOTES

b. Existing hot-mix asphalt driveways and entrances shall be sawcut at the limits of construction line. The surface shall be removed to the sawcut. The aggregate base shall be appropriately prepared, and the driveway shall be resurfaced with Hot-Mix Asphalt Surface Course.

c. Existing aggregate field entrances shall be built up in place to one foot inside the right-of-way with aggregate base course.

6. LANDSCAPING: Phosphorus Fertilizer Nutrient **shall not** be used on Lake County Highways.

7. MILLED PAVEMENT: When milled pavement is open to traffic, the maximum elevation difference between lanes, at concrete curb and gutter, or existing ground (shoulders, entrances etc...) shall not exceed 1.5 inches. With written approval from the Engineer the maximum elevation difference may be up to 3 inches if the edge of the milling is sloped a minimum 3:1 (H:V).

8. SIGNS

a. The Contractor will be required to relocate or remove and replace signs which interfere with his\her construction operations, and to temporarily reset all such signs during construction operations according to **Article 107.25 of the " Standard Specifications".**

- All unused signs shall be returned to the County.
- Longer posts may be required at some temporary or permanent sign locations to maintain proper sign elevations.

b. Permanent signing will be furnished and installed by LCDOT. Proposed permanent signs shown on the plans are for reference only.

9. UTILITIES

a. Location information for underground utility facilities shown on the plans and/or included in the Contract Specifications represents the best information provided to LCDOT, and is only included for the convenience of the Contractor. LCDOT assumes no responsibility for the sufficiency or the accuracy of the location information provided.

b. Before starting any excavation, the Contractor shall contact "JULIE" at 1-800-892-0123 for field locations of buried electric, telephone, gas, water, sewer, cable, etc.., utility lines (minimum 48 hours notification is required).

c. The Contractor shall be responsible for any damage or destruction of public or private property according to the special provisions and Article 107.20 of the " Standard Specifications". The Contractor shall restore such property at his/her own expense. The Contractor shall use all necessary precautions and protective measures required to maintain existing utilities, sewers, and appurtenances that must be kept in operation. In particular, the Contractor will take adequate measures to prevent the undermining of utilities and sewers which are still in service.

10. MAILBOXES

a. According to Article 107.20 of the "Standard Specifications"the Contractor s hall remove all mailboxes within the limits of construction which interfere with construction operations. The removed mailboxes shall be erected at temporary locations. As soon as construction operations permit, the Contractor shall set the mailboxes at their permanent locations as directed by the Engineer and approved by the Postmaster. This work is included in the unit bid price of the contract, and no additional compensation will be allowed.

11. MISCELLANEOUS

a. The Contractor shall provide temporary toilet facilities for the use of all the Contractors' personnel employed on the work site, and shall maintain same in proper sanitary condition. The temporary facilities shall include hand sanitizing stations. At the completion of the project, the facilities shall be removed and the premises left clean. The Engineer shall approve the location of the temporary toilets. The cost of this work shall be included in the unit bid prices and no additional compensation will be allowed.

b. Generally 10 foot transitions shall be used to match proposed items of work to existing items in the field, unless otherwise shown on the plans. The transitions shall be paid for at the contract unit price for the proposed item of work specified.

c. The Contractor shall not cross completed surface course, or existing pavement not scheduled to be removed, with construction equipment which may damage the pavement.

d. All references in the highway standards and standard specifications for reinforcement, dowel bars and tie bars in pavement, shoulders, curb, gutter, combination curb & gutter and median, and chair supports for continuously reinforced concrete pavement, shall be epoxy coated, unless noted on the plans.

e. The Contractor's attention is called to the fact that some quantities are given in both summary form and on the plan sheets. Care should be taken to avoid duplication of quantities.

11. PROJECT SPECIFIC NOTES

a. All plant material shall be guaranteed by the contractor for a period of 1(one) year from the date of substantial completion to be alive, healthy and true to form. All material not considered acceptable by the County within the warranty period shall be replaced by the Contractor at no additional cost to the County.

b. The Contractor shall provide 6" PVC pipe sleeves in the pcc median surface for use by LCDOT for sign re-installation. The sleeves shall be installed in their existing location and backfilled with an aggregate approved by the Engineer. The PVC sleeve shall be schedule 40, extend through the entire median section, and be flush with the median surface. The cost of this work shall be included in the unit price for STAMPED COLORED PORTLAND CEMENT CONCRETE MEDIAN SURFACE 6 INCH.

POINTS OF CONTACT

COMED
TERRI J. BLECK
PUBLIC RELATION GROUP MANAGER
1500 FRANKLIN BLVD.
LIBERTYVILLE, IL 60048
PH: (847) 816-5239

NORTH SHORE GAS CO.
MR. GERALD GLOGOVSKY
ENGINEERING
3001 GRAND AVE.
WAUKEGAN, IL 60085
PH: (847) 263-4687

AT&T CORP
MR. HECTOR GARCIA
1000 COMMERCE DR.
OAK BROOK, IL 60523
PH: (630) 573-5465

CITY OF ZION
PUBLIC WORKS DEPARTMENT
MR. RON COLANGELO
3220 W 27" STREET
ZION, IL 60099
PH: (847) 746-4057

VILLAGE OF BEACH PARK
PUBLIC WORKS DEPARTMENT
MR. GENE GROSS
11270 W. WADSWORTH ROAD
BEACH PARK, IL 60099
PH: (847) 746-1770

NORTH SHORE SANITARY DISTRICT
MR. BILL STOLTZ
WILLIAM KOEPSEL DRIVE
GURNEE, IL 60031
PH: (847) 623-6060

COMPOSITE SUMMARY OF QUANTITIES

ITEM #	E	S	PAY CODE	DESCRIPTION	UNIT	21ST STREET	KENOSHA ROAD	WADSWORTH ROAD	COMPOSITE TOTAL
						QUANTITIES			
1		S	20100110	TREE REMOVAL (6 TO 15 UNITS DIAMETER)	UNIT	82	0	0	82
2	E	S	20101200	TREE ROOT PRUNING	EACH	12	0	0	12
3			20101400	NITROGEN FERTILIZER NUTRIENT	LBS	144	98	0	242
4			20101600	POTASSIUM FERTILIZER NUTRIENT	LBS	144	98	0	242
5		S	20200100	EARTH EXCAVATION	CU YD	4583	0	170	4753
6		S	20200600	EXCAVATING AND GRADING EXISTING SHOULDER	UNIT	15	74	0	89
7			20800150	TRENCH BACKFILL	CU YD	20	0	0	20
8			21001000	GEOTECHNICAL FABRIC FOR GROUND STABILIZATON	SQ YD	4104	0	0	4104
9		S	21101600	TOPSOIL FURNISH AND PLACE, VARIABLE DEPTH	SQ YD	7726	5252	0	12978
10			25000210	SEEDING, CLASS 2A	ACRE	1.6	1.1	0.0	2.7
11			25100630	EROSION CONTROL BLANKET	SQ YD	7726	5252	0	12978
12		S	28000305	TEMPORARY DITCH CHECKS	FOOT	308	0	0	308
13		S	28000400	PERIMETER EROSION BARRIER	FOOT	3046	0	0	3046
14			28100105	STONE RIPRAP, CLASS A3	SQ YD	49	0	0	49
15		S	30300112	AGGREGATE SUBGRADE IMPROVEMENT 12"	SQ YD	3798	0	0	3798
16		S	35101400	AGGREGATE BASE COURSE, TYPE B	TON	1115	729	25	1869
17			40201000	AGGREGATE FOR TEMPORARY ACCESS	TON	240	0	0	240
18			40600290	BITUMINOUS MATERIALS (TACK COAT)	POUND	23040	20106	0	43146
19	E		40600400	MIXTURE FOR CRACKS, JOINTS, AND FLANGEWAYS	TON	5	5	0	10
20	E	S	40600525	LEVELING BINDER (HAND METHOD), N50	TON	5	5	0	10
21			40600625	LEVELING BINDER (MACHINE METHOD), N50	TON	570	689	0	1259
22			40600990	TEMPORARY RAMP	SQ YD	106	187	0	293
23			40603080	HOT-MIX ASPHALT BINDER COURSE IL-19.0, N50	TON	2236	2332	0	4568
24			40603335	HOT-MIX ASPHALT SURFACE COURSE, MIX "D", N50	TON	1726	2156	0	3882
25		S	42001300	PROTECTIVE COAT	SQ YD	29	0	0	29
26			44000100	PAVEMENT REMOVAL	SQ YD	0	0	84	84
27		S	44000159	HOT-MIX ASPHALT SURFACE REMOVAL 2 1/2"	SQ YD	5247	16474	0	21721
28		S	44000167	HOT-MIX ASPHALT SURFACE REMOVAL 4 1/2"	SQ YD	6404	0	0	6404
29	E		44000200	DRIVEWAY PAVEMENT REMOVAL	SQ YD	791	2186	0	2977
30	E		44000300	CURB REMOVAL	FOOT	0	0	115	115
31			44000500	COMBINATION CURB AND GUTER REMOVAL	FOOT	30	0	0	30
32	E	S	44201761	CLASS D PATCHES, TYPE I, 10 INCH	SQ YD	146	73	0	219
33	E	S	44201765	CLASS D PATCHES, TYPE II, 10 INCH	SQ YD	218	109	0	327
34	E	S	44201769	CLASS D PATCHES, TYPE III, 10 INCH	SQ YD	655	328	0	983
35	E	S	44201771	CLASS D PATCHES, TYPE IV, 10 INCH	SQ YD	437	218	0	655
36		S	44300100	AREA REFLECTIVE CRACK CONTROL TREATMENT	SQ YD	13689	12782	0	26471
37		S	48101200	AGGREGATE SHOULDERS, TYPE B	TON	558	816	0	1374
38			50105220	PIPE CULVERT REMOVAL	FOOT	108	0	0	108
39			54213657	PRECAST REINFORCED CONCRETE FLARED END SECTION 12"	EACH	1	0	0	1
40			54213660	PRECAST REINFORCED CONCRETE FLARED END SECTION 15"	EACH	2	0	0	2
41			550A0050	STORM SEWER, CLASS A, TYPE 1 12"	FOOT	234	0	0	234
42			550A0070	STORM SEWER, CLASS A, TYPE 1 15"	FOOT	161	0	0	161
43			550A0120	STORM SEWER, CLASS A, TYPE 1 24"	FOOT	26	0	0	26
44			550A0450	STORM SEWER, CLASS A, TYPE 2 36"	FOOT	33	0	0	33
45		S	550A2320	STORM SEWERS, RUBBER GASKET, CLASS A, TYPE 1 12"	FOOT	100	0	0	100
46			55100700	STORM SEWER REMOVAL 15"	FOOT	78	0	0	78
47		S	56105702	INSERTING VALVES 12"	EACH	1	0	0	1
48		S	56109210	WATER VALVES TO BE ADJUSTED	EACH	2	0	0	2
49		S	56400800	FIRE HYDRANTS AND VALVE TO BE MOVED	EACH	4	0	0	4
50	E	S	60100905	PIPE DRAINS 4"	FOOT	200	0	0	200
51	E	S	60100915	PIPE DRAINS 6"	FOOT	200	0	0	200
52			60218400	MANHOLE, TYPE A, 4' DIA, TYPE 1 FRAME, CLOSED LID	EACH	2	0	0	2

COMPOSITE SUMMARY OF QUANTITIES

ITEM #	E	S	PAY CODE	DESCRIPTION	UNIT	21ST STREET	KENOSHA ROAD	WADSWORTH ROAD	COMPOSITE TOTAL
						QUANTITIES			
53			60219000	MANHOLE, TYPE A, 4' DIA, TYPE 8 GRATE	EACH	1	0	0	1
54			60224005	MANHOLE, TYPE A, 6' DIA, TYPE 8 GRATE	EACH	1	0	0	1
55			60235300	INLETS, TYPE A, TYPE 1 FRAME, CLOSED LID	EACH	0	0	1	1
56			60262700	INLETS TO BE RECONSTRUCTED	EACH	0	2	0	2
57			60500040	REMOVING MANHOLES	EACH	1	0	0	1
58		S	60600605	CONCRETE CURB, TYPE B	FOOT	0	0	115	115
59		S	60603800	COMBINATION CONCRETE CURB AND GUTTER, TYPE B-6.12	FOOT	98	0	0	98
60		S	60603900	COMBINATION CURB AND GUTTER, TYPE B-6.12 (ABUTTING EXISTING PAVEMENT)	FOOT	30	0	0	30
61			67100100	MOBILIZATION	L SUM	-	-	-	1
62			70300100	SHORT TERM PAVEMENT MARKING	FOOT	9343	9462	0	18805
63	E		70300150	SHORT TERM PAVEMENT MARKING REMOVAL	SQ FT	1999	673	0	2672
64			70300210	TEMPORARY PAVEMENT MARKING - LETTERS AND SYMBOLS	SQ FT	350	218	0	568
65			70300220	TEMPORARY PAVEMENT MARKING - LINE 4"	FOOT	7222	10652	0	17874
66			70300230	TEMPORARY PAVEMENT MARKING - LINE 5"	FOOT	5497	7665	0	13162
67			70300240	TEMPORARY PAVEMENT MARKING - LINE 6"	FOOT	736	577	0	1313
68			70300260	TEMPORARY PAVEMENT MARKING - LINE 12"	FOOT	323	787	0	1110
69			70300280	TEMPORARY PAVEMENT MARKING - LINE 24"	FOOT	0	46	0	46
70			70300520	PAVEMENT MARKING TAPE, TYPE III 4"	FOOT	5995	2019	0	8014
71		S	78000100	THERMOPLASTIC PAVEMENT MARKING - LETTERS AND SYMBOLS	SQ FT	350	218	0	568
72		S	78000300	THERMOPLASTIC PAVEMENT MARKING - LINE 5"	FOOT	1131	197	0	1328
73			78001120	PAINT PAVEMENT MARKING - LINE 5"	FOOT	4378	7468	0	11846
74		S	78300200	RAISED REFLECTIVE PAVEMENT MARKER REMOVAL	EACH	99	81	0	180
75		S	A2002920	TREE, CELTIS OCCIDENTALIS (COMMON HACKBERRY), 2-1/2" CALIPER, BALLED AND BURLAPPED	EACH	4	0	0	4
76		S	A2007120	TREE, QUERCUS RUBRA (RED OAK), 2-1/2" CALIPER, BALLED AND BURLAPPED	EACH	4	0	0	4
77		S	C2005824	SHRUB, RHUS AROMATICA GRO-LOW (GRO-LOW FRAGRANT SUMAC), 2' WIDTH, BB	EACH	0	0	45	45
78		S	C2008318	SHRUB, ROSA PURPLE PAVEMENT (PURPLE PAVEMENT ROSE), 18" HEIGHT, CONTAINER	EACH	0	0	18	18
79		S	K0012990	PERENNIAL PLANTS, ORNAMENTAL TYPE, GALLON POT	UNIT	0	0	5	5.00
80		S	K0036118	MULCH PLACEMENT 3"	SQ YD	0	0	393	393
81		S	LC200051	REJECTED LOAD TRANSPORTATION	LOAD	5	2	1	8
82		S	LC200501	MAINTENANCE OF TEMPORARY EROSION CONTROL SYSTEMS	UNIT	11444	0	0	11444
83		S	LC400000	BUTT JOINT FOR ENTRANCE RESURFACING	FOOT	253	644	0	897
84		S	LC500228	GRATED CULVERT END SECTIONS, 24" DIAMETER	EACH	1	0	0	1
85		S	LC600200	INSTALL SURVEY MONUMENTS	EACH	1	0	0	1
86		S	LC780021	GROOVED THERMOPLASTIC PAVEMENT MARKING - LINE 4"	FOOT	7222	10556	0	17778
87		S	LC780023	GROOVED THERMOPLASTIC PAVEMENT MARKING - LINE 6"	FOOT	736	577	0	1313
88		S	LC780025	GROOVED THERMOPLASTIC PAVEMENT MARKING - LINE 12"	FOOT	323	775	0	1098
89		S	LC780026	GROOVED THERMOPLASTIC PAVEMENT MARKING - LINE 24"	FOOT	0	46	0	46
90		S	X2070304	POROUS GRANULAR EMBANKMENT, SPECIAL	CU YD	896	0	0	896
91		S	X2110100	TOPSOIL FURNISH AND PLACE, SPECIAL	CU YD	0	0	197	197
92		S	X2800500	INLET PROTECTION, SPECIAL	EACH	7	0	0	7
93		S	X4401198	HOT-MIX ASPHALT SURFACE REMOVAL, VARIABLE DEPTH	SQ YD	833	525	0	1358
94		S	X6013600	PIPE UNDERDRAINS 4" (MODIFIED)	FOOT	2362	0	304	2666
95		S	X6030205	FRAME AND GRATES TO BE ADJUSTED (SPECIAL)	EACH	4	7	0	11
96		S	X6062206	STAMPED COLORED PORTLAND CEMENT CONCRETE MEDIAN SURFACE 6"	SQ FT	0	0	1018	1018
97		S	X6700405	ENGINEER'S FIELD OFFICE, TYPE A (MODIFIED)	CAL MO	3	1	0	4
98		S	X7010216	TRAFFIC CONTROL AND PROTECTION, (SPECIAL)	L SUM	-	-	-	1
99	E	S	XX000856	MAILBOX REMOVAL AND RELOCATION	EACH	7	18	0	25
100		S	XX008865	PERMEABLE PLASTIC BERM	FOOT	363	0	0	363
101	E	S	XX206400	MAILBOX POST	EACH	7	18	0	25
			E	ESTIMATED OR CONTINGENCY ITEM					
			S	REQUIRES SPECIAL PROVISION					

REVISIONS / REMARKS					
NO.	DESCRIPTION	DATE	BY	SURVEYOR:	/
		/ /		DSGNR/LIAISON:	
		/ /		PLOTTED BY:	HDI8574 3/23/2016

21st STREET/KENOSHA RD/ WADSWORTH ROAD

LakeCounty
Division of Transportation

QUANTITY SHEET

21ST STREET/KENOSHA ROAD/WADSWORTH ROAD

ROUTE	SECTION	SECTION NUMBER	SHEET	SHEETS
CH17 CH53 CH67	55 125 146	15-00999-18-RS	5	128

FILE NAME: U:\Design\Shrestha\15-00999-18-RS 21st Street Resurfacing (13)to Kenosha Rd)\B-00999$Sheet_0005_Composite Summary-of-quantity.dgn

21st STREET (GREEN BAY TO KENOSHA) SUMMARY OF QUANTITIES AND INDEX OF SCHEDULES

E	S	PAY CODE	DESCRIPTION	UNIT	QUANTITY	SCHEDULE #	SHEET
	S	20100110	TREE REMOVAL (6 TO 15 UNITS DIAMETER)	UNIT	82.0	31	10
E	S	20101200	TREE ROOT PRUNING	EACH	12.0	29	12
		20101400	NITROGEN FERTILIZER NUTRIENT	LBS	144.0	30	12
		20101600	POTASSIUM FERTILIZER NUTRIENT	LBS	144.0	30	12
	S	20200100	EARTH EXCAVATION	CU YD	4583	25	12
	S	20200600	EXCAVATING AND GRADING EXISTING SHOULDER	UNIT	15	1	7
		20800150	TRENCH BACKFILL	CU YD	20	26	11
		21001000	GEOTECHNICAL FABRIC FOR GROUND STABILIZATON	SQ YD	4104	13	8
	S	21101600	TOPSOIL FURNISH AND PLACE, VARIABLE DEPTH	SQ YD	7726	30	12
		25000210	SEEDING, CLASS 2A	ACRE	1.6	30	12
		25100630	EROSION CONTROL BLANKET	SQ YD	7726	30	12
	S	28000305	TEMPORARY DITCH CHECKS	FOOT	308	11	8
	S	28000400	PERIMETER EROSION BARRIER	FOOT	3046	12	8
		28100105	STONE RIPRAP, CLASS A3	SQ YD	49	26	11
	S	30300112	AGGREGATE SUBGRADE IMPROVEMENT 12"	SQ YD	3798	13	8
	S	35101400	AGGREGATE BASE COURSE, TYPE B	TON	1115	14	9
		40201000	AGGREGATE FOR TEMPORARY ACCESS	TON	240	14A	9
		40600290	BITUMINOUS MATERIALS (TACK COAT)	POUND	23040	10	8
E		40600400	MIXTURE FOR CRACKS, JOINTS, AND FLANGEWAYS	TON	5.0	29	12
E	S	40600525	LEVELING BINDER (HAND METHOD), N50	TON	5.0	29	12
		40600625	LEVELING BINDER (MACHINE METHOD), N50	TON	570	5	7
		40600990	TEMPORARY RAMP	SQ YD	106	17	8
		40603080	HOT-MIX ASPHALT BINDER COURSE IL-19.0, N50	TON	2236	7	7
		40603335	HOT-MIX ASPHALT SURFACE COURSE, MIX "D", N50	TON	1726	8	8
	S	42001300	PROTECTIVE COAT	SQ YD	29	28/28A	10
	S	44000159	HOT-MIX ASPHALT SURFACE REMOVAL 2 1/2"	SQ YD	5247	3	7
	S	44000167	HOT-MIX ASPHALT SURFACE REMOVAL 4 1/2"	SQ YD	6404	2	7
E		44000200	DRIVEWAY PAVEMENT REMOVAL	SQ YD	791	29	12
		44000500	COMBINATION CURB AND GUTER REMOVAL	FOOT	30	27	10
E	S	44201761	CLASS D PATCHES, TYPE I, 10 INCH	SQ YD	146	29	12
E	S	44201765	CLASS D PATCHES, TYPE II, 10 INCH	SQ YD	218	29	12
E	S	44201769	CLASS D PATCHES, TYPE III, 10 INCH	SQ YD	655	29	12
E	S	44201771	CLASS D PATCHES, TYPE IV, 10 INCH	SQ YD	437	29	12
	S	44300100	AREA REFLECTIVE CRACK CONTROL TREATMENT	SQ YD	13689	6	7
	S	48101200	AGGREGATE SHOULDERS, TYPE B	TON	558	15	9
		50105220	PIPE CULVERT REMOVAL	FOOT	108	26	11
		54213657	PRECAST REINFORCED CONCRETE FLARED END SECTION 12"	EACH	1	26	11
		54213660	PRECAST REINFORCED CONCRETE FLARED END SECTION 15"	EACH	2	26	11
		550A0050	STORM SEWER, CLASS A, TYPE 1 12"	FOOT	234	26	11
		550A0070	STORM SEWER, CLASS A, TYPE 1 15"	FOOT	161	26	11
		550A0120	STORM SEWER, CLASS A, TYPE 1 24"	FOOT	26	26	11
		550A0450	STORM SEWER, CLASS A, TYPE 2 36"	FOOT	33	26	11
	S	550A2320	STORM SEWERS, RUBBER GASKET, CLASS A, TYPE 1 12"	FOOT	100	26	11
		55100700	STORM SEWER REMOVAL 15"	FOOT	78	26	11

21st STREET (GREEN BAY TO KENOSHA) SUMMARY OF QUANTITIES AND INDEX OF SCHEDULES

E	S	PAY CODE	DESCRIPTION	UNIT	QUANTITY	SCHEDULE #	SHEET
	S	56105702	INSERTING VALVES 12"	EACH	1	32	11
	S	56109210	WATER VALVES TO BE ADJUSTED	EACH	2	32	11
	S	56400800	FIRE HYDRANT AND VALVE TO BE MOVED	EACH	4	32	11
E	S	60100905	PIPE DRAINS 4"	FOOT	200	29	12
E	S	60100915	PIPE DRAINS 6"	FOOT	200	29	12
		60218400	MANHOLE, TYPE A, 4' DIA, TYPE 1 FRAME, CLOSED LID	EACH	2	26	11
		60219000	MANHOLE, TYPE A, 4' DIA, TYPE 8 GRATE	EACH	1	26	11
		60224005	MANHOLE, TYPE A, 6' DIA, TYPE 8 GRATE	EACH	1	26	11
		60500040	REMOVING MANHOLES	EACH	1	26	11
	S	60603800	COMBINATION CONCRETE CURB AND GUTTER, TYPE B-6.12	FOOT	98	28	10
	S	60603900	COMBINATION CURB AND GUTTER, TYPE B-6.12 (ABUTTING EXISTING PAVEMENT)	FOOT	30	28A	10
		70300100	SHORT TERM PAVEMENT MARKING	FOOT	9343	18	9
E		70300150	SHORT TERM PAVEMENT MARKING REMOVAL	SQ FT	1999	29	12
		70300210	TEMPORARY PAVEMENT MARKING - LETTERS AND SYMBOLS	SQ FT	350	19	9
		70300220	TEMPORARY PAVEMENT MARKING - LINE 4"	FOOT	7222	19	9
		70300230	TEMPORARY PAVEMENT MARKING - LINE 5"	FOOT	5497	19	9
		70300240	TEMPORARY PAVEMENT MARKING - LINE 6"	FOOT	736	19	9
		70300260	TEMPORARY PAVEMENT MARKING - LINE 12"	FOOT	323	19	9
		70300520	PAVEMENT MARKING TAPE, TYPE III 4"	FOOT	5995	20	10
	S	78000100	THERMOPLASTIC PAVEMENT MARKING - LETTERS AND SYMBOLS	SQ FT	350	21	10
	S	78000300	THERMOPLASTIC PAVEMENT MARKING - LINE 5"	FOOT	1131	21	10
		78001120	PAINT PAVEMENT MARKING - LINE 5"	FOOT	4378	23	10
	S	78300200	RAISED REFLECTIVE PAVEMENT MARKER REMOVAL	EACH	99	24	10
	S	A2002920	TREE, CELTIS OCCIDENTALIS (COMMON HACKBERRY), 2-1/2" CALIPER, BALLED AND BURLAPPED	EACH	4	35	11
	S	A2007120	TREE, QUERCUS RUBRA (RED OAK), 2-1/2" CALIPER, BALLED AND BURLAPPED	EACH	4	35	11
	S	LC200051	REJECTED LOAD TRANSPORTATION	LOAD	5	-	-
	S	LC200501	MAINTENANCE OF TEMPORARY EROSION CONTROL SYSTEMS	UNIT	11444	-	-
	S	LC400100	BUTT JOINT FOR ENTRANCE RESURFACING	FOOT	253	9	8
	S	LC500228	GRATED CULVERT END SECTIONS, 24" DIAMETER	EACH	1	26	11
	S	LC600200	INSTALL SURVEY MONUMENTS	EACH	1	34	11
	S	LC780021	GROOVED THERMOPLASTIC PAVEMENT MARKING - LINE 4"	FOOT	7222	22	10
	S	LC780023	GROOVED THERMOPLASTIC PAVEMENT MARKING - LINE 6"	FOOT	736	22	10
	S	LC780025	GROOVED THERMOPLASTIC PAVEMENT MARKING - LINE 12"	FOOT	323	22	10
	S	X2070304	POROUS GRANULAR EMBANKMENT, SPECIAL	CU YD	896	25	12
	S	X2800500	INLET PROTECTION, SPECIAL	EACH	7	11	8
	S	X4401198	HOT-MIX ASPHALT SURFACE REMOVAL, VARIABLE DEPTH	SQ YD	833	4	7
	S	X6013600	PIPE UNDERDRAINS 4" (MODIFIED)	FOOT	2362	26	11
	S	X6030205	FRAME AND GRATES TO BE ADJUSTED (SPECIAL)	EACH	4	33	11
	S	X6700405	ENGINEER'S FIELD OFFICE, TYPE A (MODIFIED)	CAL MO	3	-	-
E	S	XX000856	MAILBOX REMOVAL AND RELOCATION	EACH	7	29	12
	S	XX008856	PERMEABLE PLASTIC BERM	FOOT	363	11	8
E	S	XX206400	MAILBOX POST	EACH	7	29	11
		E	ESTIMATED OR CONTINGENCY ITEM				
		S	REQUIRES SPECIAL PROVISION				

4 HOT-MIX ASPHALT SURFACE REMOVAL, VARIABLE DEPTH

FROM	TO	LT/RT	LENGTH (FEET)	AVG. WIDTH (FEET)	AREA (SQ. FT.)	AREA (SQ. YDS.)
MAINLINE - LEFT						
1+27.00	1+87.00	LT	60.00	20.3	1216.8	135.2
14+58.80	14+98.80	LT	40.00	15.4	616.0	68.4
26+60.00	27+00.00	LT	40.00	12.0	480.0	53.3
27+93.20	28+27.50	LT			626.9	69.7
28+57.70	28+77.70	LT			383.1	42.6
1+27.00	1+87.00	RT	60.00	21.8	1305.0	145.0
14+58.80	14+98.80	RT	40.00	15.4	616.0	68.4
26+60.00	27+00.00	RT	40.00	12.0	480.0	53.3
27+44.60	27+86.50	RT			800.7	89.0
28+57.70	28+77.70	RT			287.4	31.9
					SUBTOTAL	756.9
PAY CODE X4401198					10% CONTINGENCY	75.7
					TOTAL	832.6

2 HOT-MIX ASPHALT SURFACE REMOVAL 4 1/2"

FROM	TO	LT/RT	LENGTH (FEET)	AVG. WIDTH (FEET)	AREA (SQ. FT.)	AREA (SQ. YDS.)
MAINLINE - LEFT						
1+87.00	5+00.00	LT	313.00	20.6	6450.9	716.8
5+00.00	10+20.30	LT	520.30	20.9	10895.1	1210.6
10+20.30	11+00.00	LT	79.70	20.0	1594.0	177.1
11+00.00	14+58.80	LT	358.80	19.8	7086.3	787.4
MAINLINE - RIGHT						
1+87.00	3+30.00	RT	143.00	21.8	3111.7	345.7
3+30.00	3+50.00	RT	20.00	22.7	453.4	50.4
3+50.00	5+00.00	RT	150.00	23.6	3537.0	393.0
5+00.00	6+59.40	RT	159.40	23.6	3761.8	418.0
6+59.40	11+18.00	RT	458.60	20.3	9286.7	1031.9
11+18.00	14+58.80	RT	340.80	18.2	6216.2	690.7
					SUBTOTAL	5821.5
PAY CODE 44000167					10% CONTINGENCY	582.1
					TOTAL	6403.6

3 HOT-MIX ASPHALT SURFACE REMOVAL 2 1/2"

FROM	TO	LT/RT	LENGTH (FEET)	AVG. WIDTH (FEET)	AREA (SQ. FT.)	AREA (SQ. YDS.)
MAINLINE - LEFT						
14+98.80	17+50.00	LT	251.20	13.6	3416.3	379.6
17+50.00	26+60.00	LT	910.00	12.0	10920.0	1213.3
27+00.00	28+57.70	LT			5931.4	659.0
MAINLINE - RIGHT						
14+98.80	17+50.00	RT	251.20	13.6	3416.3	379.6
17+50.00	26+60.00	RT	910.00	12.0	10920.0	1213.3
27+00.00	28+57.70	RT			5962.3	662.5
SIDE ROADS						
SUNNYSIDE		LT			2367.2	263.0
					SUBTOTAL	4770.4
PAY CODE 44000159					10% CONTINGENCY	477.0
					TOTAL	5247.4

5 LEVELING BINDER (MACHINE METHOD), N50

FROM	TO	LEFT OR RIGHT	LENGTH (FEET)	AVERAGE WIDTH (FEET)	DEPTH (INCHES)	AREA TO BE PRIMED (SQ. YDS.)	QUANTITY (TONS)
MAINLINE LEFT							
1+87.00	5+00.00	LT	313.00	20.6	0.75	716.8	30.1
5+00.00	10+20.30	LT	520.30	20.9	0.75	1210.6	50.8
10+20.30	11+00.00	LT	79.70	20.0	0.75	177.1	7.4
11+00.00	14+58.80	LT	358.80	19.8	0.75	787.4	33.1
14+58.80	17+50.00	LT	291.20	13.8	0.75	446.5	18.8
17+50.00	27+00.00	LT	950.00	12.0	0.75	1266.7	53.2
27+00.00	28+57.70	LT	-	-	0.75	649.6	27.3
MAINLINE RIGHT							
1+87.00	3+30.00	RT	143.00	22.0	0.75	349.6	14.7
3+30.00	3+50.00	RT	20.00	22.8	0.75	50.7	2.1
3+50.00	5+00.00	RT	150.00	23.6	0.75	393.0	16.5
5+00.00	6+59.40	RT	159.40	23.6	0.75	418.0	17.6
6+59.40	11+18.00	RT	458.60	20.3	0.75	1031.9	43.3
11+18.00	14+58.80	RT	340.80	18.2	0.75	690.7	29.0
14+58.80	17+50.00	RT	291.20	13.8	0.75	446.5	18.8
17+50.00	27+00.00	RT	950.00	12.0	0.75	1266.7	53.2
27+00.00	28+57.70	RT	-	-	0.75	654.2	27.5
SIDE ROADS							
SUNNYSIDE		LT			0.75	2358.5	99.1
					SUBTOTAL	12914.2	542.4
PAY CODE 40600625 (112 lbs./Sq. Yd./1" Depth)					5% CONTINGENCY	645.7	27.1
					TOTAL	13559.9	569.5

6 AREA REFLECTIVE CRACK CONTROL TREATMENT

FROM	TO	LEFT OR RIGHT	LENGTH (FEET)	AVERAGE WIDTH (FEET)	AREA TO BE PRIMED (SQ. YDS.)
MAINLINE LEFT					
1+87.00	5+00.00	LT	313.00	21.0	730.3
5+00.00	10+20.30	LT	520.30	20.9	1208.3
10+20.30	11+00.00	LT	79.70	20.0	177.1
11+00.00	14+58.80	LT	358.80	19.2	765.4
14+58.80	17+47.90	LT	289.10	22.0	706.7
17+47.90	18+47.90	LT	100.00	28.0	311.1
18+47.90	19+58.90	LT	111.0	34.0 - 50.0	543.2
19+58.90	21+74.20	LT	215.3	34.0	813.4
21+74.20	23+74.20	LT	200.00	28.0	622.2
23+74.20	26+44.30	LT	270.10	19.0	570.2
26+44.30	27+00.00	LT	55.70	16.0	99.0
MAINLINE RIGHT					
1+87.00	3+30.00	RT	143.0	22.0	349.6
3+30.00	3+50.00	RT	20.0	22.8	50.7
3+50.00	5+00.00	RT	150.0	23.6	393.0
5+00.00	6+59.40	RT	159.4	23.6	418.0
6+59.40	11+18.00	RT	458.6	20.3	1031.9
11+18.00	14+58.80	RT	340.8	18.2	690.7
14+58.80	23+74.20	RT	915.40	22.0	2237.6
23+47.20	26+44.30	RT	297.10	19.0	627.2
26+44.30	27+00.00	RT	55.70	16.0	99.0
				SUBTOTAL	12444.6
PAY CODE 44300100				10% CONTINGENCY	1244.5
				TOTAL	13689.0

7 HOT-MIX ASPHALT BINDER COURSE, IL-19.0, N50

FROM	TO	LEFT OR RIGHT	LENGTH (FEET)	AVERAGE WIDTH (FEET)	DEPTH (INCHES)	AREA TO BE PRIMED (SQ. YDS.)	QUANTITY (TONS)
MAINLINE LEFT							
1+57.00	5+00.00	LT	343.00	20.6	2.25	785.5	99.0
5+00.00	10+20.30	LT	520.30	20.9	2.25	1210.6	152.5
10+20.30	11+00.00	LT	79.70	20.0	2.25	177.1	22.3
11+00.00	14+58.80	LT	358.80	19.8	2.25	787.4	99.2
14+58.80	17+50.00	LT	291.20	13.8	2.25	446.5	56.3
17+50.00	27+00.00	LT	950.00	12.0	2.25	1266.7	159.6
6+58.30	10+20.30	LT	362.00	1.0	4.50	40.2	10.1
10+20.30	11+00.00	LT	79.70	2.0	4.50	17.7	4.5
11+00.00	13+05.00	LT	205.00	2.0	4.50	45.6	11.5
14+58.80	17+47.90	LT	289.10	8.2	4.50	263.4	66.4
17+47.90	18+47.90	LT	100.00	16.0	4.50	179.8	45.3
18+47.90	19+58.90	LT	111.00	22.0 - 38.0	4.50	395.1	99.6
19+58.90	21+74.20	LT	215.30	22.0	4.50	528.3	133.1
21+74.20	23+74.20	LT	200.00	16.0	4.50	355.6	89.6
23+74.20	26+44.30	LT	270.10	7.0	4.50	210.1	52.9
26+44.30	27+00.00	LT	55.70	4.0	4.50	24.8	6.2
27+00.00	28+77.70	LT	-	-	4.50	106.7	26.9
MAINLINE RIGHT							
1+57.00	3+30.00	RT	173.00	21.8	2.25	418.3	52.7
3+30.00	3+50.00	RT	20.00	22.7	2.25	50.4	6.3
3+50.00	5+00.00	RT	150.00	23.6	2.25	393.0	49.5
5+00.00	6+59.40	RT	159.40	23.6	2.25	418.0	52.7
6+59.40	11+18.00	RT	458.60	20.3	2.25	1031.9	130.0
11+18.00	14+58.80	RT	340.80	18.2	2.25	690.7	87.0
14+58.80	17+50.00	RT	291.20	13.8	2.25	446.5	56.3
17+50.00	27+00.00	RT	950.00	12.0	2.25	1266.7	159.6
6+59.40	11+18.00	RT	458.60	2.0	4.50	101.9	25.7
11+18.00	14+50.00	RT	332.00	4.0	4.50	147.6	37.2
14+50.00	14+58.80	RT	8.80	4.2	4.50	4.1	1.0
14+58.80	17+50.00	RT	291.20	8.2	4.50	265.3	66.9
17+50.00	23+74.20	RT	624.20	10.0	4.50	693.6	174.8
23+74.20	26+44.30	RT	270.1	7.0	4.50	210.1	52.9
26+44.30	27+00.00	RT	55.70	4.0	4.50	24.8	6.2
27+00.00	28+77.70	RT	-	-	4.50	140.7	35.5
					SUBTOTAL	13144.2	2129.3
PAY CODE 40603080 (112 lbs./Sq. Yd./1" Depth)					5% CONTINGENCY	657.2	106.5
					TOTAL	13801.4	2235.8

1 EXCAVATING AND GRADING EXISTING SHOULDER

FROM	TO	LEFT OR RIGHT	LENGTH (FEET)	AVERAGE WIDTH (FEET)	QUANTITY 1 UNIT = 100' (UNITS)
6+58.30	11+00.00	LT	441.70	4.0	4.4
11+00.00	13+05.00	LT	205.00	4.0	2.1
14+56.00	14+90.00	LT	34.00	6.0	0.3
26+90.00	27+47.00	LT	57.00	6.0	0.6
6+59.50	7+40.50	RT	81.00	4.0	0.8
8+07.00	9+53.80	RT	146.80	4.0	1.5
10+62.60	10+93.00	RT	30.40	4.0	0.3
11+12.30	14+75.65	RT	363.35	6.0	3.6
27+00.00	27+19.10	RT	19.10	6.0	0.2
				SUBTOTAL	13.8
PAY CODE 20200600				10% CONTINGENCY	1.4
				TOTAL	15.2

REVISIONS / REMARKS					
NO.	DESCRIPTION	DATE	BY	SURVEYOR:	/
		/ /		DSGNR/LIAISON:	
		/ /		PLOTTED BY:	hdsxs 3/3/2016

21st STREET RESURFACING

LakeCounty Division of Transportation

QUANTITY SHEET

21ST STREET RESURFACING

ROUTE	SECTION	SECTION NUMBER	SHEET	SHEETS
CH67	146	15-00999-18-RS	7	128

FILE NAME: U:\Design\Shrestha\15-00999-18-RS 21st Street Resurfacing (13th to Kenosha Rd)\B-00999$Sheet_0007_Quantity1.dgn

8 HOT-MIX ASPHALT SURFACE COURSE, MIX "D", N50

FROM	TO	LEFT OR RIGHT	LENGTH (FEET)	AVERAGE WIDTH (FEET)	DEPTH (INCHES)	AREA TO BE PRIMED (SQ. YDS.)	QUANTITY (TONS)
MAINLINE - LEFT							
1+27.00	5+00.00	LT	373.00	20.6	1.50	854.2	71.8
5+00.00	6+58.00	LT	158.00	21.0	1.50	368.7	31.0
6+58.00	11+00.00	LT	442.00	21.6	1.50	1060.8	89.1
11+00.00	13+05.00	LT	205.00	22.0	1.50	501.1	42.1
13+05.00	14+58.80	LT	153.80	19.5	1.50	333.2	28.0
14+58.80	17+47.90	LT	289.10	22.0	1.50	706.7	59.4
17+47.90	18+47.90	LT	100.00	28.0	1.50	313.1	26.3
18+47.90	19+58.90	LT	111.00	34.0 - 50.0	1.50	543.2	45.6
19+58.90	21+74.20	LT	215.30	34.0	1.50	815.4	68.5
21+74.20	23+74.20	LT	200.00	28.0	1.50	622.2	52.3
23+74.20	26+44.30	LT	270.10	19.0	1.50	570.2	47.9
26+44.30	27+00.00	LT	55.70	16.0	1.50	99.0	8.3
27+00.00	28+77.70	LT	-	-	1.75	942.5	92.4
MAINLINE - RIGHT							
1+27.00	3+30.00	RT	203.00	22.0	1.50	496.2	41.7
3+30.00	3+50.00	RT	20.00	22.8	1.50	50.7	4.3
3+50.00	5+00.00	RT	150.00	23.6	1.50	393.0	33.0
5+00.00	6+59.40	RT	159.40	23.6	1.50	418.0	35.1
6+59.40	11+00.00	RT	440.60	22.0	1.50	1077.0	90.5
11+00.00	14+58.80	RT	358.80	22.0	1.50	877.1	73.7
14+58.80	23+74.20	RT	915.40	22.0	1.50	2237.6	188.0
23+74.20	26+44.30	RT	270.1	19.0	1.50	570.2	47.9
26+44.30	27+00.00	RT	55.70	16.0	1.50	99.0	8.3
27+00.00	28+77.70	RT	-	-	1.75	988.8	96.9
SIDE ROADS							
SUNNYSIDE		LT	-	-	2.00	2358.5	264.2

ENTRANCES

NUMBER OF ENTRANCES	AREA PER ENTRANCE (SQ. YDS.)	TONS PER ENTRANCE (TONS)	DEPTH (INCHES)	AREA TO BE PRIMED (SQ. YDS.)	QUANTITY (TONS)
Field Entrance Quantities					
2	75.0	7.0	1.5	150.0	14.0
Minor Access Quantities					
9	75.0	7.0	1.5	675.0	63.0

MAILBOX TURNOUT based on LCDOT Special Detail LC4121

NO OF TURNOUTS	AREA PER TURNOUT (SQ. YDS.)	TONS PER TURNOUT (TONS)	DEPTH (INCHES)	AREA TO BE PRIMED (SQ. YDS.)	QUANTITY (TONS)
5	30.0	4.2	2.5	150.0	21.0
PAY CODE 40603335 (112 lbs./Sq. Yd./1" Depth)			SUBTOTAL	18271.4	1644.0
			5% CONTINGENCY	913.6	82.2
			TOTAL	**19185.0**	**1726.2**

9 BUTT JOINT FOR ENTRANCE RESURFACING

PER LCDOT SPECIAL DETAIL LC4110

NUMBER OF ENTRANCES	TYPE OF DRIVEWAY	LENGTH / DRIVEWAY	(FEET)
WITH CURB & GUTTER			
2	major	45.0	90.0
WITH AGGREGATE SHOULDER			
7	Minor	20.0	140.0
PAY CODE LC400100		SUBTOTAL	230.0
		10% CONTINGENCY	23.0
		TOTAL	**253.0**

10 BITUMINOUS MATERIALS (TACK COAT)

Area from Leveling Binder (Machine Method)	13559.9
Area from Hot-Mix Asphalt Binder Course	13801.4
Area from Hot-Mix Asphalt Surface Course	19185.0
SUM OF AREAS (SQ. YDS.)	**46546.3**
PRIME TYPE SS-1 @ 0.45 GAL./SQ. YD.	
PAY CODE 40600290 — PRIME QUANTITY (POUND)	20945.8
10% CONTINGENCY	2094.6
TOTAL PRIME (POUND)	**23040.4**

16

FROM STATION	TO STATION	LEFT OR RIGHT	DESCRIPTION	LENGTH (ft)
			NOT USED	
			INTENTIONALLY LEFT BLANK	

17 TEMPORARY RAMP

STATION	TYPE	LT/RT	LENGTH (FEET)	AVG WIDTH (FEET)	AREA (SQ. FT.)	AREA (SQ. YDS.)
2+15	Major	RT	32.0	1.0	32.0	3.6
4+40	Major	RT	32.0	1.0	32.0	3.6
6+10	Major	RT	32.0	1.0	32.0	3.6
7+91	Major	RT	37.0	1.0	37.0	4.1
9+97	Major	RT	31.0	1.0	31.0	3.4
10+30	Major	RT	29.0	1.0	29.0	3.2
11+03	Major	RT	28.0	1.0	28.0	3.1
13+73	Major	LT	126.0	1.0	126.0	14.0
15+12	Major	RT	27.0	1.0	27.0	3.0
22+45	Major	RT	60.0	1.0	60.0	6.7
PAY CODE 40600990				SUBTOTAL		48.2
				2 Applications		96.4
				10% CONTINGENCY		9.6
				TOTAL		**106.1**

12 SCHEDULE OF PERIMETER EROSION BARRIER

STATION	LT OR RT	OFFSET (FEET)	LENGTH (FEET)
21ST STREET			
14+50.00	LT	40.0	---
15+78.00	LT	40.0	128
15+78.00	LT	65.0	25
21+72.00	LT	65.0	594
21+72.00	LT	50.0	15
27+13.50	LT	50.0	542
27+61.40	LT	82.6	64
14+50.00	RT	40.0	---
14+95.80	RT	40.0	46
15+16.90	RT	40.0	---
15+60.70	RT	40.0	44
15+60.70	RT	50.0	10
26+88.60	RT	50.0	1128
27+12.60	RT	79.3	47
KENOSHA ROAD			
51+83.30		49.0	---
52+00.80		49.0	18
53+70.60		49.0	---
54+73.20		49.0	103
54+77.90		44.0	5
PAY CODE 28000400	SUBTOTAL		2769
	10% CONTINGENCY		277
	TOTAL		**3046**

11 SCHEDULE EROSION CONTROL ITEMS

STATION	LT / RT	OFFSET (FT)	TEMPORARY DITCH CHECK 28000305 (FT)	INLET PROTECTION, SPECIAL X2800500 (EACH)	PERMEABLE PLASTIC BERM XX008865 (FT)
21st STREET					
15+00.00	LT	35.3	14		16.5
16+00.00	LT	37.1	14		16.5
17+00.00	LT	41.3	14		16.5
17+50.00	LT	44.0		1	
18+50.00	LT	44.0		1	
20+00.00	LT	42.4	14		16.5
20+83.90	LT	44.0		1	
21+50.00	LT	42.3	14		16.5
24+00.00	LT	38.4	14		16.5
25+00.00	LT	37.7	14		16.5
26+00.00	LT	38.3	14		16.5
27+00.00	LT	39.0		1	
14+50.00	RT	31.4	14		16.5
16+00.00	RT	31.9	14		16.5
17+00.00	RT	34.7	14		16.5
18+00.00	RT	35.9	14		16.5
19+00.00	RT	40.0	14		16.5
20+00.00	RT	42.6	14		16.5
20+81.40	RT	40.5		1	
21+00.00	RT	44.0	14		16.5
22+00.00	RT	34.8	14		16.5
23+00.00	RT	31.7	14		16.5
24+00.00	RT	32.0	14		16.5
25+00.00	RT	32.0	14		16.5
26+00.00	RT	33.9	14		16.5
26+50.00	RT	38.8		1	
KENOSHA ROAD					
52+01.40	LT	31.0		1	
54+00.00	LT	33.7	14		16.5
54+70.00	LT	37.0	14		16.5
	TOTAL		**308**	**7**	**363**

13 SCHEDULE OF AGGREGATE SUBGRADE IMPROVEMENT 12" AND GEOTECHNICAL FABRIC

STATION	LT/RT	12" THICKNESS OFFSET	OFFSET	C&G?	AREA (SQ YDS)	RUNNING TOTAL THIS AREA	AREA TOTALS (SQ YDS)	GEO. FABRIC (SQ YD)	RUNNING GEO. FABRIC TOTAL	AREA TOTAL (SQ YDS)
21ST STREET WESTBOUND										
14+58.80	LT	15.6	23.0							
17+47.90	LT	12.0	23.0		295.6	295.6		327.8	327.8	
18+32.00	LT	12.0	33.1		150.0	445.6		159.4	487.2	
18+32.00	LT	VARIES		RADII	517.0	962.6		534.8	1022.0	
19+74.90	LT									
19+74.90	LT	12.0	35.0		---	---		---	---	
21+74.20	LT	12.0	35.0		509.4	1472.0		531.6	1553.6	
23+74.20	LT	12.0	23.0		377.8	1849.8		400.1	1953.7	
26+44.30	LT	12.0	17.0		240.1	2089.9		270.2	2223.9	
27+00.00	LT	12.0	17.0		31.0	2120.9		37.2	2261.1	
21ST STREET EASTBOUND										
14+58.80	RT	15.6	23.0							
17+50.00	RT	12.0	23.0		297.7	297.7		330.1	330.1	
23+74.20	RT	12.0	23.0		763.0	1060.7		832.4	1162.5	
26+44.30	RT	12.0	17.0		240.1	1300.8		270.2	1432.7	
27+00.00	RT	12.0	17.0		31.0	1331.8		37.2	1469.9	
PAYCODE 30300112, 21001000					SUBTOTAL		3452.7			3731.0
					10% CONTINGENCY		345.3			373.10
					TOTAL		**3798.0**			**4104.1**

REVISIONS / REMARKS					
NO.	DESCRIPTION	DATE	BY	SURVEYOR:	/
		/ /		DSGNR/LIAISON:	
		/ /		PLOTTED BY:	hdsxs 3/14/2016

21st STREET RESURFACING

LakeCounty Division of Transportation

QUANTITY SHEET

21ST STREET RESURFACING

ROUTE	SECTION	SECTION NUMBER	SHEET	SHEETS
CH67	146	15-00999-18-RS	8	128

FILE NAME: U:\Design\Shrestha\15-00999-18-RS 21st Street Resurfacing (13th to Kenosha Rd)\B-00999$Sheet_0008_Quantity2.dgn

15 AGGREGATE SHOULDERS, TYPE B

STATION	ITEM	LT/RT	LENGTH (FEET)	WIDTH (FEET)	DEPTH (INCHES)	AREA (SQ. YDS.)	VOLUME (CU. YDS.)	QUANTITY (TONS)
MAINLINE - RIGHT								
1+27.00	1+72.00	RT	45.0	4.0	6.0	20.0	3.4	6.8
2+26.00	3+39.00	RT	113.0	4.0	6.0	50.2	8.4	16.8
6+66.00	7+33.70	RT	67.7	2.0	6.0	15.0	2.6	5.2
8+10.50	9+47.60	RT	137.1	2.0	6.0	30.5	5.1	10.2
10+65.80	10+91.20	RT	25.4	2.0	6.0	5.6	1.0	2.0
11+13.30	14+58.80	RT	345.5	4.0	6.0	153.6	25.6	51.2
14+58.80	14+88.80	RT	30.0	3.3	6.0	10.8	1.9	3.8
14+88.80	14+99.20	RT	10.4	3.1	6.0	3.5	0.6	1.2
15+33.60	15+53.60	RT	20.0	2.0	6.0	4.4	0.8	1.6
15+53.60	27+00.00	RT	1146.4	4.0	6.0	509.5	85.0	170.0
MAINLINE - LEFT								
1+79.20	3+47.50	LT	168.30	4.0	6.0	74.8	12.5	25.0
6+58.20	13+05.00	LT	646.80	2.0	6.0	143.7	24.0	48.0
14+58.80	18+41.90	LT	383.10	4.0	6.0	170.3	28.4	56.8
19+64.90	27+00.00	LT	735.10	4.0	6.0	326.7	54.5	109.0
PAY CODE 48101200 (2 Tons per Cubic Yard)				SUBTOTAL		1518.8	253.8	507.6
				10% CONTINGENCY		151.9	25.4	50.8
				TOTAL		1670.6	279.2	558.4

14 AGGREGATE BASE COURSE, TYPE B

NUMBER OF ENTRNACES		AREA PER ENTRANCE	DEPTH (INCHES)	AREA (SQ YDS)	VOLUME (CU YDS)	QUANTITY (TON)
QUANTITIES and AREAS FROM HMA SURFACE COURSE & HMA BINDER COURSE SCHEDULES						
ENTRANCE PAVEMENT FROM HMA SURFACE COURSE SCHEDULE						
FIELD ENTRANCE	2.0	43.0	6.0	86.0	14.3	28.7
PRIVATE ENTRANCE	9.0	75.0	6.0	675.0	112.5	225.0
MAILBOX TURNOUT PAVEMENT FROM HMA SURFACE COURSE SCHEDULE						
MAILBOX TURNOUT	1.0	30.0	6.0	30.0	5.0	10.0
HMA SHOULDER AREAS FROM HMA BINDER COURSE SCHEDULE						
	21ST STREET		4.0	3373.7	374.9	749.7
PAY CODE 35101400 (2 Tons per Cubic Yard)	SUBTOTALS			4164.7	506.7	1013.4
	10 % CONTINGENCY					101.3
	TOTAL					1114.7

14A AGGREGATE FOR TEMPORARY ACCESS

FROM STATION	TO STATION	LT/RT	AREA (SQ FT)	DEPTH (INCHES)	AREA (SQ YDS)	VOLUME (CU YDS)	QUANTITY (TON)
14+58.8	15+28.6	RT	707.4	18.0	78.6	39.3	78.6
22+04.3	22+84.0	LT	1254.5	18.0	139.4	69.7	139.4
PAY CODE 40201000 (2 Tons per Cubic Yard)	SUBTOTALS				218.0	109.0	218.0
	10% CONTINGENCY						21.8
	TOTAL						239.8

19 TEMPORARY PAVEMENT MARKINGS

FROM STATION	TO STATION	LEFT OR RIGHT	LENGTH (FEET)	DESCRIPTION	QUANTITY (SQ FT)
LETTERS & SYMBOLS - WHITE					
2+96.32	3+28.32	C/L	32.0	LEFT TURN ONLY	36.4
5+06.30	5+30.30	C/L	24.0	TWO WAY LEFT TURN	32.8
6+81.00	7+05.00	C/L	24.0	TWO WAY LEFT TURN	32.8
8+55.80	8+79.80	C/L	24.0	TWO WAY LEFT TURN	32.8
10+30.40	10+54.40	C/L	24.0	TWO WAY LEFT TURN	32.8
12+26.60	12+58.60	C/L	32.0	LEFT TURN ONLY	36.4
16+52.80	16+84.80	C/L	32.0	LEFT TURN ONLY	36.4
18+12.70	18+44.70	C/L	32.0	LEFT TURN ONLY	36.4
19+69.20	20+01.20	LT	32.0	RIGHT TURN ONLY	36.4
21+42.20	21+74.20	LT	32.0	RIGHT TURN ONLY	36.4
PAY CODE 70300210				TOTAL 1 APPLICATION	349.6
				TOTAL 1 APPLICATIONS	349.6

FROM STATION	TO STATION	LEFT OR RIGHT	LENGTH (FEET)	DESCRIPTION	QUANTITY (FEET)
4" YELLOW LINE					
1+27.00	4+65.40	C/L	338.4	DOUBLE YELLOW	676.8
4+65.00	13+15.20	LT	850.2	10/30 SOLID SKIP MEDIAN	1062.8
4+65.00	13+15.20	RT	850.2	10/30 SOLID SKIP MEDIAN	1062.8
14+09.20	14+58.80	LT	49.6	DOUBLE YELLOW	99.2
14+09.20	14+58.80	RT	49.6	DOUBLE YELLOW	99.2
14+58.80	16+42.80	LT	184.0	DOUBLE YELLOW	368.0
14+58.80	16+42.80	RT	184.0	DOUBLE YELLOW	368.0
16+42.80	18+52.80	LT	210.0	DOUBLE YELLOW	420.0
19+39.00	19+72.00	LT	41.1	DOUBLE YELLOW	82.2
19+39.00	19+72.00	RT	28.2	DOUBLE YELLOW	56.4
19+72.00	26+44.20	LT	672.2	DOUBLE YELLOW	1344.4
19+72.00	26+44.20	RT	672.2	DOUBLE YELLOW	1344.4
26+44.20	27+00.00	C/L	55.8	DOUBLE YELLOW	111.6
27+00.00	27+20.24	C/L	20.2	DOUBLE YELLOW	40.5
28+35.00	28+77.70	C/L	42.7	DOUBLE YELLOW	85.4
PAY CODE 70300220				TOTAL 1 APPLICATION	7221.6
				TOTAL 1 APPLICATIONS	7221.6

FROM STATION	TO STATION	LEFT OR RIGHT	LENGTH (FEET)	DESCRIPTION	QUANTITY (FEET)
5" SOLID WHITE LINE					
1+27.00	5+00.00	LT	373.0	EDGE LINE	373.0
5+00.00	11+00.00	LT	600.0	EDGE LINE	600.0
11+00.00	13+10.00	LT	210.0	EDGE LINE	210.0
14+39.30	14+58.80	LT	19.5	EDGE LINE	19.5
14+39.30	14+58.80	LT	19.5	EDGE LINE	19.5
14+58.80	17+35.00	LT	276.2	EDGE LINE	276.2
17+35.00	18+51.70	LT	116.7	EDGE LINE	116.7
19+59.20	23+74.20	LT	415.0	EDGE LINE	415.0
23+74.20	27+00.00	LT	325.8	EDGE LINE	325.8
1+27.00	5+00.00	RT	373.0	EDGE LINE	373.0
5+00.00	11+00.00	RT	600.0	EDGE LINE	600.0
11+00.00	14+58.80	RT	358.8	EDGE LINE	358.8
14+58.80	27+00.00	RT	1241.2	EDGE LINE	1241.2
NW Quad @ SUNNYSIDE DR		LT	51.0	EDGE LINE @ RETURN	51.0
NE Quad @ SUNNYSIDE DR		LT	52.0	EDGE LINE @ RETURN	52.0
NW Quad @ LIBERTY LANE		LT	14.3	EDGE LINE @ RETURN	14.3
NE Quad @ LIBERTY LANE		LT	16.9	EDGE LINE @ RETURN	16.9
NW Quad @ KENOSHA RD		LT	101.1	EDGE LINE @ RETURN	101.1
SW Quad @ KENOSHA RD		LT	84.5	EDGE LINE @ RETURN	84.5
NE Quad @ KENOSHA RD		RT	103.0	EDGE LINE @ RETURN	103.0
SE Quad @ KENOSHA RD		RT	145.0	EDGE LINE @ RETURN	145.0
PAY CODE 70300230				TOTAL 1 APPLICATION	5496.5
				TOTAL 1 APPLICATIONS	5496.5

19 TEMPORARY PAVEMENT MARKINGS

FROM STATION	TO STATION	LEFT OR RIGHT	LENGTH (FEET)	DESCRIPTION	QUANTITY (SQ FT)
6" SOLID WHITE LINE					
1+27.00	3+38.30	LT	211.3	TURN LANE	211.3
12+15.20	13+15.20	RT	100.0	TURN LANE	100.0
16+42.80	18+52.80	RT	210.0	TURN LANE	210.0
19+59.20	21+74.20	LT	215.0	TURN LANE	215.0
PAY CODE 70300240				TOTAL 1 APPLICATION	736.3
				TOTAL 1 APPLICATIONS	736.3

LOCATION		NUMBER	AVGERAGE	DESCRIPTION	QUANTITY (FEET)
12" SOLID YELLOW LINE					
14+14.50	14+58.80	4.0	14.0	MEDIAN DIAGONALS	56.0
14+58.80	16+42.80	6.0	8.6	MEDIAN DIAG. @ 30'	51.6
19+39.00	20+84.40	5.0	17.0	MEDIAN DIAG. @ 30'	85.0
20+84.40	23+84.40	3.0	17.0	MEDIAN DIAG. @ 75'	51.0
23+84.40	26+44.20	8.0	9.9	MEDIAN DIAG. @ 30'	79.2
PAY CODE 70300260				TOTAL 1 APPLICATION	322.8
				TOTAL 1 APPLICATIONS	322.8

18 SHORT TERM PAVEMENT MARKINGS

FROM STATION	TO STATION	LEFT OR RIGHT	LENGTH (FEET)	DESCRIPTION	QUANTITY (FEET)
LETTERS & SYMBOLS					
2+96.32	3+28.32	C/L	32.0	LEFT TURN ONLY	109
5+06.30	5+30.30	C/L	24.0	TWO WAY LEFT TURN	24
6+81.00	7+05.00	C/L	24.0	TWO WAY LEFT TURN	24
8+55.80	8+79.80	C/L	24.0	TWO WAY LEFT TURN	24
10+30.40	10+54.40	C/L	24.0	TWO WAY LEFT TURN	24
12+26.60	12+58.60	C/L	32.0	LEFT TURN ONLY	109
16+52.80	16+84.80	C/L	32.0	LEFT TURN ONLY	109
18+12.70	18+44.70	C/L	32.0	LEFT TURN ONLY	109
19+69.20	20+01.20	LT	32.0	RIGHT TURN ONLY	109
21+42.20	21+74.20	LT	32.0	RIGHT TURN ONLY	109
PAY CODE 70300100				TOTAL 1 APPLICATION	750.0
				TOTAL 4 APPLICATIONS	3000.0

FROM STATION	TO STATION	LEFT OR RIGHT	LENGTH (FEET)	DESCRIPTION	QUANTITY (FEET)
4" DOUBLE YELLOW LINE, 4' DASH 40' SPACE (MULTIPLIED BY 2)					
1+27.00	4+65.40	C/L	338.4	D DASH CENTERLINE	67.7
4+65.00	13+15.20	LT	850.2	D DASH CENTERLINE	170.0
4+65.00	13+15.20	RT	850.2	D DASH CENTERLINE	170.0
14+09.20	14+42.80	LT	33.6	D DASH CENTERLINE	6.7
14+09.20	14+42.80	RT	33.6	D DASH CENTERLINE	6.7
14+42.80	16+42.80	LT	200.0	D DASH CENTERLINE	40.0
14+42.80	16+42.80	RT	200.0	D DASH CENTERLINE	40.0
16+42.80	18+54.70	LT	211.9	D DASH CENTERLINE	42.4
19+39.00	23+74.20	LT	435.2	D DASH CENTERLINE	87.0
19+39.00	23+74.20	RT	435.2	D DASH CENTERLINE	87.0
23+74.20	26+44.20	LT	270.0	D DASH CENTERLINE	54.0
23+74.20	26+44.20	RT	270.0	D DASH CENTERLINE	54.0
26+44.20	27+20.24	C/L	76.0	D DASH CENTERLINE	15.2
28+35.00	28+77.70	C/L	42.7	D DASH CENTERLINE	8.5
PAY CODE 70300100				TOTAL 1 APPLICATION	849.4
				TOTAL 4 APPLICATIONS	3397.6

FROM STATION	TO STATION	LEFT OR RIGHT	LENGTH (FEET)	DESCRIPTION	QUANTITY (FEET)
4" SOLID WHITE LINE					
1+27.00	3+38.30	LT	211.3	TURN LANE	211.3
12+15.20	13+15.20	RT	100.0	TURN LANE	100.0
16+42.80	18+52.80	RT	210.0	TURN LANE	210.0
19+59.20	21+74.20	LT	215.0	TURN LANE	215.0
PAY CODE 70300100				TOTAL 1 APPLICATION	736.3
				TOTAL 4 APPLICATIONS	2945.2
				COMPOSITE TOTAL	9342.8

REVISIONS / REMARKS					
NO.	DESCRIPTION	DATE	BY	SURVEYOR:	/
		/ /		DSGNR/LIAISON:	
		/ /		PLOTTED BY:	hdsxs 3/9/2016

21st STREET RESURFACING

LakeCounty Division of Transportation

QUANTITY SHEET

21ST STREET RESURFACING

ROUTE	SECTION	SECTION NUMBER	SHEET	SHEETS
CH67	146	15-00999-18-RS	9	128

FILE NAME: U:\Design\Shrestha\15-00999-18-RS 21st Street Resurfacing (131to Kenosha Rd)\B-00999$Sheet_0009_Quantity3.dgn

21 THERMOPLASTIC PAVEMENT MARKINGS

LETTERS & SYMBOLS - WHITE (SQUARE FEET)

FROM STATION	TO STATION	LEFT OR RIGHT	LENGTH (FEET)	DESCRIPTION	QUANTITY (SQ FT)
2+96.32	3+28.32	C/L	32.0	LEFT TURN ONLY	36.4
5+06.30	5+30.30	C/L	24.0	TWO WAY LEFT TURN	32.8
6+81.00	7+05.00	C/L	24.0	TWO WAY LEFT TURN	32.8
8+55.80	8+79.80	C/L	24.0	TWO WAY LEFT TURN	32.8
10+30.40	10+54.40	C/L	24.0	TWO WAY LEFT TURN	32.8
12+26.60	12+58.60	C/L	32.0	LEFT TURN ONLY	36.4
16+52.80	16+84.80	C/L	32.0	LEFT TURN ONLY	36.4
18+12.70	18+44.70	C/L	32.0	LEFT TURN ONLY	36.4
19+69.20	20+01.20	LT	32.0	RIGHT TURN ONLY	36.4
21+42.20	21+74.20	LT	32.0	RIGHT TURN ONLY	36.4
PAY CODE 78000100				TOTAL	349.6

5" SOLID WHITE LINE

FROM STATION	TO STATION	LEFT OR RIGHT	LENGTH (FEET)	DESCRIPTION	QUANTITY (FEET)
NW Quad @ SUNNYSIDE DR		LT	51.0	EDGE LINE @ RETURN	51.0
NE Quad @ SUNNYSIDE DR		LT	52.0	EDGE LINE @ RETURN	52.0
17+48.10	18+52.10	LT	104.0	EDGE LINE	104.0
NW Quad @ LIBERTY LANE		LT	35.1	EDGE LINE @ RETURN	35.1
NE Quad @ LIBERTY LANE		LT	39.5	EDGE LINE @ RETURN	39.5
19+58.90	23+74.20	LT	415.3	EDGE LINE	415.3
NW Quad @ KENOSHA RD		LT	101.1	EDGE LINE @ RETURN	101.1
SW Quad @ KENOSHA RD		LT	84.5	EDGE LINE @ RETURN	84.5
NE Quad @ KENOSHA RD		RT	103.0	EDGE LINE @ RETURN	103.0
SE Quad @ KENOSHA RD		RT	145.0	EDGE LINE @ RETURN	145.0
PAY CODE 78000300				TOTAL	1130.5

22 GROOVED THERMOPLASTIC PAVEMENT MARKINGS

4" YELLOW LINE

FROM STATION	TO STATION	LEFT OR RIGHT	LENGTH (FEET)	DESCRIPTION	QUANTITY (FEET)
1+27.00	4+65.40	C/L	338.4	DOUBLE YELLOW	676.8
4+65.00	13+15.20	LT	850.2	10/30 SOLID SKIP MEDIAN	1062.8
4+65.00	13+15.20	RT	850.2	10/30 SOLID SKIP MEDIAN	1062.8
14+09.20	14+58.80	LT	49.6	DOUBLE YELLOW	99.2
14+09.20	14+58.80	RT	49.6	DOUBLE YELLOW	99.2
14+58.80	16+42.80	LT	184.0	DOUBLE YELLOW	368.0
14+58.80	16+42.80	RT	184.0	DOUBLE YELLOW	368.0
16+42.80	18+52.80	LT	210.0	DOUBLE YELLOW	420.0
19+39.00	19+72.00	LT	41.1	DOUBLE YELLOW	82.2
19+39.00	19+72.00	RT	28.2	DOUBLE YELLOW	56.4
19+72.00	26+44.20	LT	672.2	DOUBLE YELLOW	1344.4
19+72.00	26+44.20	RT	672.2	DOUBLE YELLOW	1344.4
26+44.20	27+00.00	C/L	55.8	DOUBLE YELLOW	111.6
27+00.00	27+20.24	C/L	20.2	DOUBLE YELLOW	40.5
28+35.00	28+77.70	C/L	42.7	DOUBLE YELLOW	85.4
PAY CODE LC780021				TOTAL	7221.6

6" SOLID WHITE LINE

FROM STATION	TO STATION	LEFT OR RIGHT	LENGTH (FEET)	DESCRIPTION	QUANTITY (FEET)
1+27.00	3+38.30	LT	211.3	TURN LANE	211.3
12+15.20	13+15.20	RT	100.0	TURN LANE	100.0
16+42.80	18+52.80	RT	210.0	TURN LANE	210.0
19+59.20	21+74.20	LT	215.0	TURN LANE	215.0
PAY CODE LC780023				TOTAL	736.3

12" SOLID YELLOW LINE

FROM	TO	NUMBER OF STRIPES	AVG. LENGTH	DESCRIPTION	QUANTITY (FEET)
14+14.50	14+58.80	4.0	14.0	MEDIAN DIAGONALS	56.0
14+58.80	16+42.80	6.0	8.6	MEDIAN DIAG. @ 30'	51.6
19+39.00	20+84.40	5.0	17.0	MEDIAN DIAG. @ 30'	85.0
20+84.40	23+84.40	3.0	17.0	MEDIAN DIAG. @ 75'	51.0
23+84.40	26+44.20	8.0	9.9	MEDIAN DIAG. @ 30'	79.2
PAY CODE LC780025				TOTAL	322.8

20 PAVEMENT MARKING TAPE, TYPE III 4"

LETTERS & SYMBOLS

FROM STATION	TO STATION	LEFT OR RIGHT	LENGTH (FEET)	DESCRIPTION	QUANTITY (FEET)
2+96.32	3+28.32	C/L	32.0	LEFT TURN ONLY	109.0
12+26.60	12+58.60	C/L	32.0	LEFT TURN ONLY	109.0
16+52.80	16+84.80	C/L	32.0	LEFT TURN ONLY	109.0
18+12.70	18+44.70	C/L	32.0	LEFT TURN ONLY	109.0
19+69.20	20+01.20	LT	32.0	RIGHT TURN ONLY	109.0
21+42.20	21+74.20	LT	32.0	RIGHT TURN ONLY	109.0
				TOTAL 1 APPLICATION	654.0

4' DASH 40' SPACE

FROM STATION	TO STATION	LEFT OR RIGHT	LENGTH (FEET)	DESCRIPTION	QUANTITY (FEET)
1+27.00	4+65.40	C/L	338.4	D DASH CENTERLINE	67.7
4+65.00	13+15.20	LT	850.2	D DASH CENTER MEDIAN	85.0
4+65.00	13+15.20	RT	850.2	D DASH CENTER MEDIAN	85.0
14+09.20	14+90.00	LT	80.8	D DASH CENTER MEDIAN	16.2
14+09.20	14+90.00	RT	80.8	D DASH CENTER MEDIAN	8.1
14+09.20	14+58.80	LT	49.6	D DASH CENTER MEDIAN	99.2
14+09.20	14+58.80	RT	49.6	D DASH CENTER MEDIAN	99.2
14+58.80	16+42.80	LT	184.0	D DASH CENTER MEDIAN	368.0
14+58.80	16+42.80	RT	184.0	D DASH CENTER MEDIAN	368.0
16+42.80	18+52.80	LT	210.0	D DASH CENTER MEDIAN	420.0
19+39.00	19+72.00	LT	41.1	D DASH CENTER MEDIAN	82.2
19+39.00	19+72.00	RT	28.2	D DASH CENTER MEDIAN	56.4
19+72.00	26+44.20	LT	672.2	D DASH CENTER MEDIAN	1344.4
19+72.00	26+44.20	RT	672.2	D DASH CENTER MEDIAN	1344.4
26+44.20	27+00.00	C/L	55.8	D DASH CENTERLINE	111.6
27+00.00	27+20.24	C/L	20.2	D DASH CENTERLINE	40.5
28+35.00	28+77.70	C/L	42.7	D DASH CENTERLINE	8.5
				TOTAL 1 APPLICATION	4604.4

4" SOLID WHITE LINE

FROM STATION	TO STATION	LEFT OR RIGHT	LENGTH (FEET)	DESCRIPTION	QUANTITY (FEET)
1+27.00	3+38.30	LT	211.3	TURN LANE	211.3
12+15.20	13+15.20	RT	100.0	TURN LANE	100.0
16+42.80	18+52.80	RT	210.0	TURN LANE	210.0
19+59.20	21+74.20	LT	215.0	TURN LANE	215.0
				TOTAL 1 APPLICATION	736.3
PAY CODE 70300520				COMPOSITE TOTAL	5994.7

23 PAINT PAVEMENT MARKINGS

5" SOLID WHITE LINE

FROM	TO	LEFT OR RIGHT	LENGTH (FEET)	DESCRIPTION	QUANTITY (FEET)
1+27.00	5+00.00	LT	373.0	EDGE LINE	373.0
5+00.00	11+00.00	LT	600.0	EDGE LINE	600.0
11+00.00	13+10.00	LT	210.0	EDGE LINE	210.0
14+39.30	14+58.80	LT	19.5	EDGE LINE	19.5
14+58.80	17+35.00	LT	276.2	EDGE LINE	276.2
23+74.20	27+00.00	LT	325.8	EDGE LINE	325.8
1+27.00	5+00.00	RT	373.0	EDGE LINE	373.0
5+00.00	11+00.00	RT	600.0	EDGE LINE	600.0
11+00.00	14+58.80	RT	358.8	EDGE LINE	358.8
14+58.80	27+00.00	RT	1241.2	EDGE LINE	1241.2
PAY CODE 78001120				TOTAL	4377.5

24 RAISED REFLECTIVE PAVEMENT MARKER REMOVAL

FROM STATION	TO STATION	LT/RT	DESCRIPTION	LENGTH (FEET)	SPACING (FEET)	QUANTITY (EACH)
1+27.00	13+15.00	LT	C/L	1188.0	40.0	31
		RT	C/L	1188.0	40.0	31
1+27.00	3+38.00	LT	TURN LANE	211.0	40.0	6
12+15.00	13+15.00	RT	TURN LANE	100.0	40.0	4
14+09.00	17+50.00	LT	C/L	341.0	40.0	10
		RT	C/L	341.0	40.0	10
PAY CODE 78300200					SUBTOTAL	90
					10% CONTIGENCY	9
					TOTAL	99

27 COMBINATION CURB AND GUTTER REMOVAL

FROM STATION	TO STATION	OFFSET	LT/RT	DESCRIPTION	FOOT
12+90.00	13+15.00	20-22	LT	CONCRETE CURB AND GUTTER	25
				SUBTOTAL	25
				20% CONTINGENCY	5.0
				PAY CODE 44000500 TOTAL	30.0

28 COMBINATION CONCRETE CURB AND GUTTER, TYPE B-6.12, PROTECTIVE COAT

FROM STATION	TO STATION	OFFSET	LT/RT	DESCRIPTION	FOOT	42001300 PROTECTIVE COAT SQ YD
18+41.90	18+77.30	33.3 - 50.0	LT	CONCRETE CURB AND GUTTER	40.9	9.1
19+29.50	19+64.90	34.0 - 50.0	LT	CONCRETE CURB AND GUTTER	40.9	9.1
				SUBTOTAL	81.8	18.2
				20% CONTINGENCY	16.4	3.6
				PAY CODE 60603800, 42001300 TOTAL	98.2	21.8

28A COMBINATION CONCRETE CURB AND GUTTER B-6.12 (ABUTTING EXISTING PAVEMENT), PROTECTIVE COAT

FROM STATION	TO STATION	OFFSET	LT/RT	DESCRIPTION	FOOT	42001300 PROTECTIVE COAT SQ YD
12+90.00	13+15.00	20-22	LT	CONCRETE CURB AND GUTTER	25	5.6
				SUBTOTAL	25	5.6
				20% CONTINGENCY	5.0	1.1
				PAY CODE 60603900, 42001300 TOTAL	30.0	6.7

31 TREE REMOVAL (6 TO 15 UNITS DIAMETER)

STATION	OFFSET	LEFT OR RIGHT	DESCRIPTION	QUANTITY (UNIT)
21st STREET				
16+99.80	48.8	RT	TREE REMOVAL (6 TO 15 UNITS DIAMETER)	11.0
17+03.40	43.2	RT	TREE REMOVAL (6 TO 15 UNITS DIAMETER)	13.0
17+28.10	47.7	RT	TREE REMOVAL (6 TO 15 UNITS DIAMETER)	6.0
17+35.70	43.8	RT	TREE REMOVAL (6 TO 15 UNITS DIAMETER)	10.0
17+37.20	45.6	RT	TREE REMOVAL (6 TO 15 UNITS DIAMETER)	11.0
17+37.60	42.9	RT	TREE REMOVAL (6 TO 15 UNITS DIAMETER)	9.0
17+39.40	43.4	RT	TREE REMOVAL (6 TO 15 UNITS DIAMETER)	13.0
22+19.60	44.7	RT	TREE REMOVAL (6 TO 15 UNITS DIAMETER)	8.7
PAY CODE 20100110			SUBTOTALS	81.7
			TOTAL	81.7

26 SCHEDULE OF DRAINAGE RELATED ITEMS

FROM STATION	TO STATION	LEFT OR RIGHT	OFFSET (FT)	TRENCH BACKFILL 20800150 (CU YD)	STONE RIPRAP, CLASS A3 28100105 (SQ YD)	PIPE CULVERT REMOVAL 50105220 (FT)	PRECAST REINFORCED CONCRETE FLARED END SECTION 12" 54213657 (EACH)	PRECAST REINFORCED CONCRETE FLARED END SECTION 15" 54213660 (EACH)	GRATED CULVERT END SECTIONS, 24" DIAMETER LC500228 (EACH)	STORM SEWER, CLASS A, TYPE 1 12" 550A0050 (FT)	STORM SEWER, CLASS A, TYPE 1 15" 550A0070 (FT)	STORM SEWER, CLASS A, TYPE 1 24" 550A0120 (FT)	STORM SEWER, CLASS A, TYPE 2 36" 550A0450 (FT)	STORM SEWERS, RUBBER GASKET, CLASS A, TYPE 1 12" 550A2320 (FT)	STORM SEWER REMOVAL 15" 55100700 (FOOT)	MANHOLES, TYPE A, 4'-DIAMETER, TYPE 1 FRAME, CLOSED LID 60218400 (EACH)	MANHOLES, TYPE A, 4'-DIAMETER, TYPE 8 GRATE 60219000 (EACH)	MANHOLES, TYPE A, 6'-DIAMETER, TYPE 8 GRATE 60224005 (EACH)	REMOVING MANHOLES 60500040 (EACH)	PIPE UNDERDRAINS 4" (MODIFIED) X6013600 (FT)
21st Street																				
14+60.00	16+50.00	LT	23.0 - 32.2																	202
16+50.00	18+50.00	LT	23.0 - 44.0																	205
17+31.60	17+53.80	LT	25.1			23														
17+50.00	---	LT	44.0				1													
17+50.00	18+50.00	LT	44.0											100						
18+50.00	---	LT	44.0														1			
18+50.00	20+83.90	LT	44.0	10.6						234										
19+74.90	20+83.90	LT	35.0 - 37.0																	115
20+03.20	20+80.30	LT	46.7 - 48.5												78					
20+83.90	22+15.40	LT	24.5 - 37.0																	137
20+83.30	---	LT	48.6																1	
20+83.90	---	LT	44.0															1		
20+83.90	---	LT	29.8 - 44.0	7.7									14							
20+83.90	---	LT	44.0 - 48.6										5							
20+84.00	---	LT	37.8																	
22+84.20	25+00.00	LT	20.2 - 29.4																	227
25+00.00	26+95.00	LT	17.0 - 36.4																	215
27+00.00	---	LT	39.0					1												
27+00.00	27+66.60	LT	39.0 - 41.9								67									
27+66.60	---	LT	41.9													1				
14+60.00	16+50.00	RT	23.0 - 37.4																	207
16+50.00	18+50.00	RT	23.0 - 32.2																	205
14+88.80	15+27.80	RT	28.5			40														
18+50.00	20+00.00	RT	23.0 - 32.2																	158
20+00.00	20+81.90	RT	23.0 - 25.1																	85
20+71.30	20+91.30	RT	34.5 - 46.5		27															
20+81.40	---	RT	40.5																	
20+81.40	---	RT	26.9 - 40.5										14							
20+81.90	22+00.00	RT	23.0 - 25.1																	119
22+00.00	23+50.00	RT	23.0 - 32.2																	161
23+50.00	25+00.00	RT	20.2 - 29.4																	158
25+00.00	26+45.00	RT	17.0 - 37.8																	168
26+50.00	---	RT	38.8					1												
26+50.00	27+43.80	RT	36.8 - 38.8	1.7							94									
27+43.80	---	RT	36.8													1				
Kenosha Road																				
53+33.10	53+54.60	LT	32.9 - 33.0			23														
53+38.20	53+58.60	LT	32.9 - 36.4									26								
53+58.60	---	LT	37.8						1											
53+63.20	---	LT	38.5		22															
54+41.40	54+63.90	LT	33.4			22														
			TOTAL	20	49	108	1	2	1	234	161	26	33	100	78	2	1	1	1	2362

33 FRAMES AND GRATES TO BE ADJUSTED (SPECIAL)

STATION	OFFSET	LT/RT	DESCRIPTION	EACH
6+38.30	19.1	LT	FRAMES & GRATES TO BE ADJUSTED - STORM	1
28+01.40	29.5	RT	FRAMES & GRATES TO BE ADJUSTED	1
28+10.20	27.9	RT	FRAMES & GRATES TO BE ADJUSTED	1
28+21.70	21.7	RT	FRAMES & GRATES TO BE ADJUSTED	1
			PAY CODE X6030205 TOTAL	4

34 INSTALL SURVEY MONUMENTS

STATION	LEFT OR RIGHT	QUANTITY (EACH)
21st STREET		
16+41.30	RT	1.0
PAY CODE LC600200		1.0
		1.0

35 TREE REPLACEMENT

CODE	PAY ITEM	Sym.	Sta. 16+00 to Sta. 17+00	Sta. 17+35 to Sta. 18+40
A2002920	TREE, CELTIS OCCIDENTALIS (COMMON HACKBERRY), 2-1/2" CALIPER, BALLED AND BURLAPPED	Ce oc	4	
A2007120	TREE, QUERCUS RUBRA (RED OAK), 2-1/2" CALIPER, BALLED AND BURLAPPED	Qu ru		4

32 SCHEDULE OF WATERMAIN RELATED ITEMS

STATION	OFFSET	LEFT OR RIGHT	INSERTING VALVES 12" 56105702 (EACH)	WATER VALVES TO BE ADJUSTED 56109210 (EACH)	FIRE HYDRANT AND VALVE TO BE MOVED 56400800 (EACH)
21st STREET					
14+27.50	34.3	RT	1		
16+41.30	40.0	RT			1
17+81.40	22.7	RT		1	
19+43.10	38.75	RT			1
22+16.10	23.2	RT		1	
22+52.00	48.75	RT			1
25+52.60	48.75	RT			1
TOTAL			1	2	4

REVISIONS / REMARKS					
NO.	DESCRIPTION	DATE	BY	SURVEYOR:	/
		/ /		DSGNR/LIAISON:	
		/ /		PLOTTED BY:	hdsxs 3/9/2016

21st STREET RESURFACING

LakeCounty Division of Transportation

QUANTITY SHEET
21ST STREET RESURFACING

ROUTE	SECTION	SECTION NUMBER	SHEET	SHEETS
CH67	146	15-00999-18-RS	11	128

FILE NAME: U:\Design\Shrestha\15-00999-18-RS 21st Street Resurfacing (131 to Kenosha Rd)\B-00999$Sheet_0011_Quantity5.dgn

30 LANDSCAPING ITEMS

FROM STATION	TO STATION	LT/RT	LENGTH (FEET)	WIDTH (FEET)	AREA (SQ FT)	AREA (SQ YDS)	THICKNES (INCHES)	VOLUME (CU YD)
21st STREET MAINLINE - LEFT								
6+58.00	11+00.00	LT	442.0	6.0	2652.0	294.7	1.5	12.3
11+00.00	13+05.00	LT	205.0	6.0	1230.0	136.7	1.5	5.7
14+58.80	14+88.68	LT	29.9	8.1	240.5	26.7	4.0	3.0
14+88.68	15+00.00	LT	11.3	10.8	121.7	13.5	4.0	1.5
15+00.00	15+25.68	LT	25.7	11.8	303.0	33.7	4.0	3.7
15+25.68	15+50.00	LT	24.3	12.6	306.4	34.0	4.0	3.8
15+50.00	16+00.00	LT	50.0	18.7	932.5	103.6	4.0	11.5
16+00.00	16+50.00	LT	50.0	24.7	1232.5	136.9	4.0	15.2
16+50.00	17+00.00	LT	50.0	26.1	1302.5	144.7	4.0	16.1
17+00.00	17+50.00	LT	50.0	26.6	1331.3	147.9	4.0	16.4
17+50.00	17+80.00	LT	30.0	24.6	738.0	82.0	4.0	9.1
17+80.00	18+00.00	LT	20.0	21.1	422.8	47.0	4.0	5.2
18+00.00	18+50.00	LT	50.0	21.3	1063.3	118.1	4.0	13.1
18+50.00	19+00.00	LT	50.0	17.7	882.5	98.1	4.0	10.9
19+00.00	19+50.00	LT	50.0	17.3	865.0	96.1	4.0	10.7
19+50.00	20+00.00	LT	50.0	21.0	1047.5	116.4	4.0	12.9
20+00.00	20+50.00	LT	50.0	19.9	992.5	110.3	4.0	12.3
20+50.00	20+82.73	LT	32.7	18.4	600.6	66.7	4.0	7.4
20+82.73	21+00.00	LT	17.3	16.4	282.4	31.4	4.0	3.5
21+00.00	21+50.00	LT	50.0	13.8	690.0	76.7	4.0	8.5
21+50.00	22+00.00	LT	50.0	12.3	612.5	68.1	4.0	7.6
22+00.00	22+13.00	LT	13.0	12.3	159.3	17.7	4.0	2.0
22+13.00	22+45.00	LT	32.0	6.0	192.0	21.3	4.0	2.4
22+45.00	22+50.00	LT	5.0	0.0	0.0	0.0	4.0	0.0
22+50.00	23+00.00	LT	50.0	8.2	407.5	45.3	4.0	5.0
23+00.00	23+50.00	LT	50.0	17.9	895.0	99.4	4.0	11.0
23+50.00	24+00.00	LT	50.0	19.7	985.0	109.4	4.0	12.2
24+00.00	24+50.00	LT	50.0	21.5	1075.0	119.4	4.0	13.3
24+50.00	25+00.00	LT	50.0	22.8	1137.5	126.4	4.0	14.0
25+00.00	25+50.00	LT	50.0	23.5	1172.5	130.3	4.0	14.5
25+50.00	26+00.00	LT	50.0	25.2	1260.5	140.1	4.0	15.6
26+00.00	26+50.00	LT	50.0	26.8	1340.5	148.9	4.0	16.5
26+50.00	27+00.00	LT	50.0	28.4	1417.5	157.5	4.0	17.5
27+00.00	27+54.43	LT	54.4	17.5	952.5	105.8	1.5	4.4
21st STREET MAINLINE - RIGHT								
6+59.50	7+83.60	RT	124.1	6.0	744.6	82.7	1.5	3.4
7+97.90	9+90.80	RT	192.9	6.0	1157.4	128.6	1.5	5.4
10+37.30	10+96.20	RT	58.9	6.0	353.4	39.3	1.5	1.6
11+10.60	11+71.10	RT	60.5	6.0	363.0	40.3	1.5	1.7
11+83.20	13+95.70	RT	212.5	6.0	1275.0	141.7	1.5	5.9
14+09.50	14+58.80	RT	49.3	6.0	295.8	32.9	1.5	1.4
14+58.80	14+88.80	RT	30.0	13.8	412.5	45.8	4.0	5.1
14+88.80	14+98.00	RT	9.2	13.0	119.6	13.3	4.0	1.5
15+15.00	15+25.68	RT	10.7	13.0	138.3	15.4	4.0	1.7
15+25.68	15+50.00	RT	24.3	13.0	314.9	35.0	4.0	3.9
15+50.00	16+00.00	RT	50.0	15.4	770.0	85.6	4.0	9.5
16+00.00	16+50.00	RT	50.0	18.7	932.5	103.6	4.0	11.5
16+50.00	17+00.00	RT	50.0	20.6	1027.5	114.2	4.0	12.7
17+00.00	17+50.00	RT	50.0	22.3	1115.0	123.9	4.0	13.8
17+50.00	17+80.00	RT	30.0	23.0	690.0	76.7	4.0	8.5
17+80.00	18+00.00	RT	20.0	23.0	460.0	51.1	4.0	5.7
18+00.00	18+50.00	RT	50.0	23.0	1150.0	127.8	4.0	14.2
18+50.00	19+00.00	RT	50.0	23.0	1150.0	127.8	4.0	14.2
19+00.00	19+50.00	RT	50.0	23.0	1150.0	127.8	4.0	14.2
19+50.00	20+00.00	RT	50.0	23.0	1150.0	127.8	4.0	14.2
20+00.00	20+50.00	RT	50.0	23.0	1150.0	127.8	4.0	14.2
20+50.00	20+82.73	RT	32.7	23.0	752.8	83.6	4.0	9.3
20+82.73	21+00.00	RT	17.3	23.0	397.2	44.1	4.0	4.9
21+00.00	21+50.00	RT	50.0	23.0	1150.0	127.8	4.0	14.2
21+50.00	22+00.00	RT	50.0	23.0	1150.0	127.8	4.0	14.2
22+00.00	22+13.63	RT	13.6	23.0	313.5	34.8	4.0	3.9
22+13.63	22+45.65	RT	32.0	23.0	736.5	81.8	4.0	9.1
22+45.65	22+50.00	RT	4.3	23.0	100.0	11.1	4.0	1.2
22+50.00	23+00.00	RT	50.0	20.5	1025.0	113.9	4.0	12.7
23+00.00	23+50.00	RT	50.0	17.8	890.0	98.9	4.0	11.0
23+50.00	24+00.00	RT	50.0	20.6	1030.0	114.4	4.0	12.7
24+00.00	24+50.00	RT	50.0	24.2	1207.5	134.2	4.0	14.9
24+50.00	25+00.00	RT	50.0	25.3	1262.5	140.3	4.0	15.6
25+00.00	25+50.00	RT	50.0	26.4	1317.5	146.4	4.0	16.3
25+50.00	26+00.00	RT	50.0	27.5	1372.5	152.5	4.0	16.9
26+00.00	26+50.00	RT	50.0	28.5	1425.0	158.3	4.0	17.6
26+50.00	27+00.00	RT	50.0	17.6	880.0	97.8	4.0	10.9
27+00.00	27+54.43	RT	54.4	6.1	332.0	36.9	1.5	1.5

30 LANDSCAPING ITEMS

FROM STATION	TO STATION	LT/RT	LENGTH (FEET)	WIDTH (FEET)	AREA (SQ FT)	AREA (SQ YDS)	THICKNES (INCHES)	VOLUME (CU YD)
KENOSHA ROAD MAINLINE - LEFT								
53+58.60	54+00.00	LT	41.4	23.1	954.3	106.0	4.0	11.8
54+00.00	54+50.00	LT	50.0	17.8	890.0	98.9	4.0	11.0
54+50.00	54+92.30	LT	42.3	8.6	363.8	40.4	4.0	4.5

DRIVEWAYS

NUMBER OF ENTRANCES	AREA PER ENTRANCE (SQ FT)	(SQ. YDS.)	QUANTITY (SQ FT)	(SQ. YDS.)		
Minor Access Quantities based on LCDOT Special Detail LC4110					-	-
7	90.0	10.0	630.0	70.0		
Major Access Quantities based on LCDOT Special Detail LC4111						
2	135.0	15.0	270.0	30.0		
		SUBTOTAL	63213.8	7023.8		697.1
		10% CONTINGENCY	6321.4	702.4		69.7
		TOTALS	69535.2	**7726.1**		**766.8**

SUMMARY

PAY CODE	DESCRIPTION	UNIT	QUANTITY
21101600	TOPSOIL FUNRISH AND PLACE, VARIABLE DEPTH	SQ YD	7726.1
25000210	SEEDING, CLASS 2A	ACRE	1.6
25100630	EROSION CONTROL BLANKET	SQ YD	7726.1
20101400	NITROGEN FERTILIZER NUTRIENT (90 lbs./Acre)	LBS	143.7
20101600	POTASSIUM FERTILIZER NUTRIENT (90 lbs./Acre)	LBS	143.7

29 ESTIMATED & CONTINGENT ITEMS

PAY CODE	NUMBER OF ENTRANCES	AREA PER ENTRANCE (SQ. YDS.)	DEPTH (INCHES)	QUANTITY (SQ. YDS.)	VOLUME (CU. YDS.)	QUANTITY (TON)
	Field Entrances					
	2	43.0	6.0	86.0	14.3	
	Contingency for Private Entrance Reconstruction/Removal					
	9	75.0	6.0	675.0	112.5	
	Mailbox Turnout Reconstruction/Removal					
	1	30.0	---	30.0	---	
			TOTAL	791.0		
20101200	TREE ROOT PRUNING		EACH			12.0
44000200	DRIVEWAY PAVEMENT REMOVAL		SQ YD			791.0
40600400	MIXTURE FOR CRACKS, JOINTS, AND FLANGEWAYS		TON			5.0
40600525	LEVELING BINDER (HAND METHOD), N50		TON			5.0
60100905	PIPE DRAINS 4"		FOOT			200.0
60100915	PIPE DRAINS 6"		FOOT			200.0
70300150	SHORT TERM PAVEMENT MARKING REMOVAL*		SQ FT			269.0
XX000856	MAILBOX REMOVAL AND RELOCATION		EACH			7.0
XX206400	MAILBOX POST		EACH			7.0
	PAVEMENT PATCHING					**AREA (SQ. YDS.)**
	AREA OF MAINLINE HOT-MIX ASPHALT CONCRETE SURFACE COURSE =					14550
	PATCHING @ 10%					1455
44201761	CLASS D PATCHES, TYPE I, 10 INCH			10%		145.5
44201765	CLASS D PATCHES, TYPE II, 10 INCH			15%		218.3
44201769	CLASS D PATCHES, TYPE III, 10 INCH			45%		654.8
44201771	CLASS D PATCHES, TYPE IV, 10 INCH			30%		436.5

* SHORT TERM PAVEMENT MARKING REMOVAL should be used for Removal of Pavement Marking Tape, Type III 4" From Surface Cours

25 SCHEDULE OF EARTH EXCAVATION

STATION	DISTANCE (ft)	LT/RT	CUT: TOTAL SECTION AREA (sq ft)	CUT: TOTAL CUT VOLUME (cu ft)	CUT: TOPSOIL STRIP SECTION AREA (sq ft)	CUT: TOPSOIL STRIP CUT VOLUME (cu ft)	CUT: EARTH SECTION AREA (sq ft)	CUT: EARTH CUT VOLUME (cu ft)	CUT: AGG SHOULDER SECTION AREA (sq ft)	CUT: AGG SHOULDER CUT VOLUME (cu ft)	CUT: RDWY PVMT SECTION AREA (sq ft)	CUT: RDWY PVMT CUT VOLUME (cu ft)	FILL: SECTION AREA (sq ft)	FILL: FILL VOLUME (cu ft)
21st STREET														
14+58.80		LT	-		-		-		-		-		-	
14+88.68	29.9	LT	24.1	360.1	15.7	235.2	1.5	22.6	3.4	50.9	3.4	51.4	18.3	273.7
15+00.00	11.3	LT	25.5	280.8	16.3	181.2	1.7	18.3	4.2	43.1	3.3	38.1	18.8	210.3
15+25.68	25.7	LT	29.7	709.3	17.7	436.4	4.4	78.6	4.0	105.3	3.6	89.0	18.9	484.2
15+50.00	24.3	LT	28.8	711.1	19.2	449.1	2.1	78.9	3.6	91.9	3.9	91.2	18.6	455.3
16+00.00	50.0	LT	40.5	1,731.8	32.9	1,302.0	1.6	92.8	3.5	175.5	2.6	161.5	47.0	1,638.0
16+50.00	50.0	LT	43.3	2,095.5	36.8	1,740.5	1.5	78.3	3.4	170.3	1.7	106.5	66.3	2,831.3
17+00.00	50.0	LT	44.7	2,200.8	38.3	1,875.8	1.4	74.0	3.0	159.5	2.0	91.5	46.9	2,828.5
17+50.00	50.0	LT	50.3	2,375.0	40.4	1,967.5	3.8	130.8	3.4	159.3	2.7	117.5	36.2	2,075.3
17+80.00	30.0	LT	45.8	1,441.4	37.8	1,172.7	1.5	79.7	3.3	99.0	3.3	90.0	61.2	1,460.9
18+00.00	20.0	LT	45.2	909.8	37.0	747.4	1.3	28.5	3.2	64.8	3.6	69.1	65.9	1,271.5
18+50.00	50.0	LT	51.0	2,403.8	42.8	1,993.8	1.1	61.3	3.8	174.5	3.4	174.3	87.8	3,841.8
19+00.00	50.0	LT	56.3	2,682.8	47.9	2,266.5	1.4	63.0	4.1	195.3	3.0	158.0	100.9	4,715.0
19+50.00	50.0	LT	51.5	2,696.3	43.2	2,276.3	1.3	68.5	4.0	201.8	3.0	149.8	106.6	5,185.5
20+00.00	50.0	LT	51.4	2,572.3	43.1	2,155.5	1.4	67.5	3.8	196.0	3.1	153.3	113.4	5,500.0
20+50.00	50.0	LT	50.9	2,555.5	42.3	2,133.8	1.5	72.3	4.1	197.3	3.0	152.3	113.8	5,679.8
20+81.82	31.8	LT	33.1	1,335.5	22.2	1,026.0	3.6	81.9	4.2	131.4	3.1	96.1	102.8	3,445.8
21+00.00	18.2	LT	14.5	432.8	2.9	228.3	4.3	72.1	4.3	77.3	3.0	55.1	65.3	1,528.5
21+50.00	50.0	LT	13.9	709.8	2.5	136.3	3.4	193.8	4.9	230.3	3.0	149.5	18.5	2,095.3
22+00.00	50.0	LT	34.1	1,199.3	2.3	120.0	23.6	675.8	4.8	242.3	3.5	161.3	0.4	471.5
22+13.00	13.0	LT	28.9	409.4	2.1	28.2	23.6	306.7	-	31.1	3.2	43.5	0.2	3.8
22+45.00	32.0	LT	5.6	552.0	-	33.1	2.4	416.0	-	-	3.2	102.9	4.7	79.2
22+50.00	5.0	LT	6.3	29.9	-	-	3.1	13.9	-	-	3.2	16.1	3.9	21.7
23+00.00	50.0	LT	39.7	1,150.3	2.0	50.8	28.6	794.0	5.8	145.8	3.2	159.8	-	98.0
23+50.00	50.0	LT	37.6	1,931.0	2.0	101.0	25.8	1,360.3	6.3	302.8	3.5	167.0	4.4	109.3
24+00.00	50.0	LT	31.5	1,727.3	1.9	97.5	20.1	1,147.8	6.3	313.5	3.2	168.5	5.4	244.5
24+50.00	50.0	LT	44.0	1,888.3	2.0	97.5	32.1	1,306.0	6.6	320.3	3.3	164.5	3.8	229.0
25+00.00	50.0	LT	40.0	2,100.3	1.9	98.3	28.7	1,520.5	5.9	311.8	3.5	169.8	3.4	179.8
25+50.00	50.0	LT	44.0	2,100.5	2.0	97.8	32.7	1,535.3	6.2	303.3	3.1	164.3	5.0	211.0
26+00.00	50.0	LT	45.4	2,234.3	2.0	100.5	34.3	1,673.8	6.4	315.3	2.7	144.8	8.1	326.3
26+50.00	50.0	LT	36.1	2,036.8	2.1	103.3	25.0	1,481.3	6.1	313.3	2.9	139.0	10.0	451.8
27+00.00	50.0	LT	24.9	1,525.0	2.2	107.3	13.0	950.3	6.7	319.5	3.0	148.0	11.3	532.5
27+54.43	54.4	LT	-	413.7	-	59.6	-	354.1					-	307.0
14+58.80		RT	13.2		2.0		4.4		3.5		3.3		6.5	
14+88.68	29.9	RT	13.4	398.0	2.0	60.5	6.6	164.3	2.0	81.3	2.9	91.9	9.7	241.6
15+00.00	11.3	RT	6.3	89.1	-	-	3.2	55.5	-	-	3.1	33.7	3.6	75.2
15+25.68	25.7	RT	14.0	261.0	2.1	26.7	6.1	119.4	2.3	29.7	3.5	85.3	4.9	109.3
15+50.00	24.3	RT	15.0	353.2	2.2	52.0	5.5	141.1	3.9	75.9	3.4	84.3	10.1	182.8
16+00.00	50.0	RT	17.1	802.5	2.9	126.8	6.6	302.5	3.6	189.3	4.0	184.0	11.2	532.8
16+50.00	50.0	RT	13.7	768.3	3.3	154.8	4.0	265.0	3.1	168.3	3.2	180.3	18.4	741.3
17+00.00	50.0	RT	30.4	1,101.5	3.4	168.8	19.1	577.5	4.7	194.8	3.2	160.5	12.1	764.3
17+50.00	50.0	RT	40.9	1,783.5	3.9	183.0	30.6	1,242.5	4.4	226.5	2.1	131.5	12.2	608.0
17+80.94	30.9	RT	44.8	1,325.8	3.7	117.7	33.7	994.7	5.2	148.0	2.1	65.3	9.0	326.9
18+00.00	19.1	RT	46.9	874.0	3.6	69.9	35.8	662.3	6.7	113.0	0.9	28.8	7.6	157.6
18+50.00	50.0	RT	40.9	2,197.0	3.7	182.5	29.8	1,640.0	5.4	300.3	2.1	74.3	10.0	438.8
19+00.00	50.0	RT	49.0	2,249.3	3.6	181.0	35.9	1,642.5	7.2	314.5	2.4	111.3	12.0	549.8
19+50.00	50.0	RT	44.7	2,344.3	3.7	182.0	33.7	1,740.0	5.1	307.8	2.2	114.5	13.2	631.0
20+00.00	50.0	RT	41.4	2,154.3	3.8	187.8	29.5	1,580.0	5.8	272.3	2.4	114.3	18.0	780.5
20+50.00	50.0	RT	35.9	1,932.3	3.8	190.0	24.7	1,355.0	5.1	273.0	2.2	114.3	22.7	1,017.0
20+81.82	31.8	RT	25.7	979.6	4.0	123.9	14.6	624.5	5.0	161.5	2.2	69.7	30.5	845.9
21+00.00	18.2	RT	29.5	501.6	3.7	69.8	18.5	300.4	5.1	92.4	2.1	38.9	14.0	404.3
21+50.00	50.0	RT	42.1	1,788.0	3.7	185.5	31.3	1,245.0	5.0	253.0	2.1	104.5	6.1	501.8
22+00.00	50.0	RT	54.1	2,403.5	3.8	188.3	42.7	1,850.0	5.4	260.3	2.1	105.0	3.4	236.0
22+13.00	13.0	RT	53.5	699.0	3.9	50.4	41.9	549.9	5.5	71.2	2.1	27.5	3.9	47.4
22+45.00	32.0	RT	48.7	1,634.6	3.9	124.5	37.3	1,267.2	5.6	178.2	2.0	64.6	4.5	134.6
22+50.00	5.0	RT	44.0	231.8	3.8	19.1	32.5	174.5	5.8	28.6	1.9	9.7	4.9	23.3
23+00.00	50.0	RT	26.8	1,770.8	3.0	168.5	15.0	1,187.5	6.5	308.3	2.3	106.5	4.2	225.8
23+50.00	50.0	RT	23.6	1,259.8	3.0	148.8	12.1	677.5	6.3	321.0	2.2	112.5	5.0	229.8
24+00.00	50.0	RT	51.6	1,878.5	3.7	167.0	39.2	1,282.5	6.3	316.0	2.4	113.0	3.7	218.3
24+50.00	50.0	RT	66.1	2,941.3	3.7	185.3	53.6	2,320.0	6.1	311.0	2.7	125.0	3.2	171.8
25+00.00	50.0	RT	72.6	3,466.0	3.7	186.0	60.2	2,845.0	6.0	303.8	2.6	131.3	3.3	161.3
25+50.00	50.0	RT	62.5	3,377.0	3.6	184.0	50.0	2,755.0	5.9	297.3	3.0	140.8	2.8	152.3
26+00.00	50.0	RT	67.8	3,257.5	3.6	181.0	54.9	2,622.5	6.0	297.5	3.2	156.5	4.6	184.8
26+50.00	50.0	RT	52.4	3,005.3	3.4	174.5	38.6	2,337.5	7.4	337.0	3.0	156.3	5.8	259.0
27+00.00	50.0	RT	12.6	1,625.3	0.7	101.8	3.0	1,040.0	5.7	328.8	3.2	154.8	1.5	181.8
27+54.43	54.4	RT	-	100.4	-	18.8	-	81.6					-	40.8
LIBERTY LANE														
22+45.00	(21st St)	LT	-	1,219.3	-	-	-	-	-	-	-	1,219.3	-	-
KENOSHA ROAD														
53+68.60		LT	23.6		9.3		14.3		-		-		3.1	
54+00.00	31.4	LT	14.0	590.9	6.2	243.0	7.9	347.9	-	-	-	-	0.1	50.2
54+50.00	50.0	LT	18.1	505.3	5.7	-	12.4	505.3	-	-	-	-	-	1.8
54+70.00	20.0	LT	-	180.6	-	57.0	-	123.6	-	-	-	-	-	-
TOTALS				**99,551.5**		**27,879.1**		**51,517.6**		**12,001.9**		**8,152.8**		**60,012.6**

PAY CODE 20200100	**CUT**	**3,687.1 cu yd**
	ESTIMATED UNDERCUT	**896.0 cu yd**
	TOTAL CUT	**4,583.1 cu yd**
	FILL REQUIRED (ASSUMED 20% SHRINKAGE)	**2,667.2 cu yd**
	EXCESS	**1,915.9 cu yd**
PAY CODE X2070304	**PGE, (SPECIAL)**	**896.0 cu yd**

REVISIONS / REMARKS					
NO.	DESCRIPTION	DATE	BY	SURVEYOR:	/
		/ /		DSGNR/LIAISON:	
		/ /		PLOTTED BY:	hdsxs 3/14/2016

21st STREET RESURFACING

LakeCounty Division of Transportation

QUANTITY SHEET

21ST STREET RESURFACING

ROUTE	SECTION	SECTION NUMBER	SHEET	SHEETS
CH67	146	15-00999-18-RS	12	128

FILE NAME: U:\Design\Shrestha\15-00999-18-RS 21st Street Resurfacing (131to Kenosha Rd)\B-00999$Sheet_0012_Quantity6.dgn

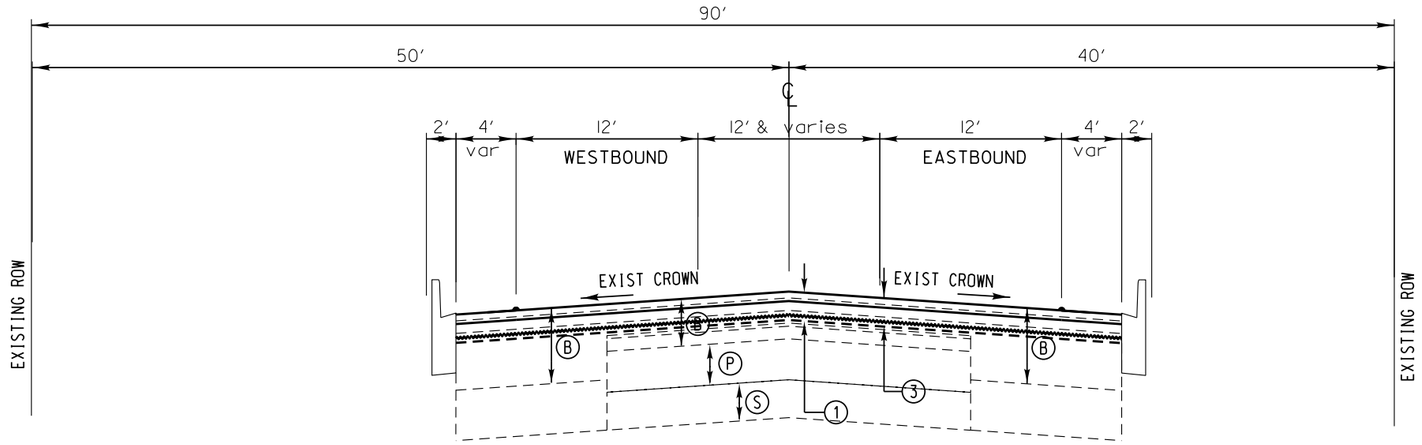

EXIST. PAVEMENT PER RECORDS:
- 1995 - 3" Bit. Binder and Surface Course (After mill 2")
- 1982 - 2" Bit. Binder and Surface Course
- 1974 - 2" Bit. Surface Plant Mix
- 1966 - 2" Hot Sand Seal
- 1963 - 2" B-5
- 1963 - 6½" Pozzolanic Base
- 1963 - 6" Sub-Base Granular, Type B

(B) BITUMINOUS
(P) POZZOLANIC BASE
(S) SUB-BASE GRANULAR

STA. 0+40.00 TO STA. 6+59.40

B-6.12 C&G exist on north side of intersection and on both sides from STA. 3+48.00 TO STA. 6+59.40

PROPOSED TYPICAL SECTION

PROPOSED PAVEMENT:
1.) 4½" SURFACE REMOVAL
2.) EXCAVATING AND GRADING EXISTING SHOULDERS
3.) 1½" HOT-MIX ASPHALT SURFACE COURSE, MIX "D", N50
2¼" HOT-MIX ASPHALT BINDER COURSE, IL-19.0, N50
AREA REFLECTIVE CRACK CONTROL TREATMENT
¾" LEVELING BINDER (MACHINE METHOD), N50
4.) 4½" HOT-MIX ASPHALT BINDER COURSE, IL-19.0, N50
5.) AGGREGATE SHOULDERS, TYPE B
6.) FURNISHING & PLACING TOPSOIL

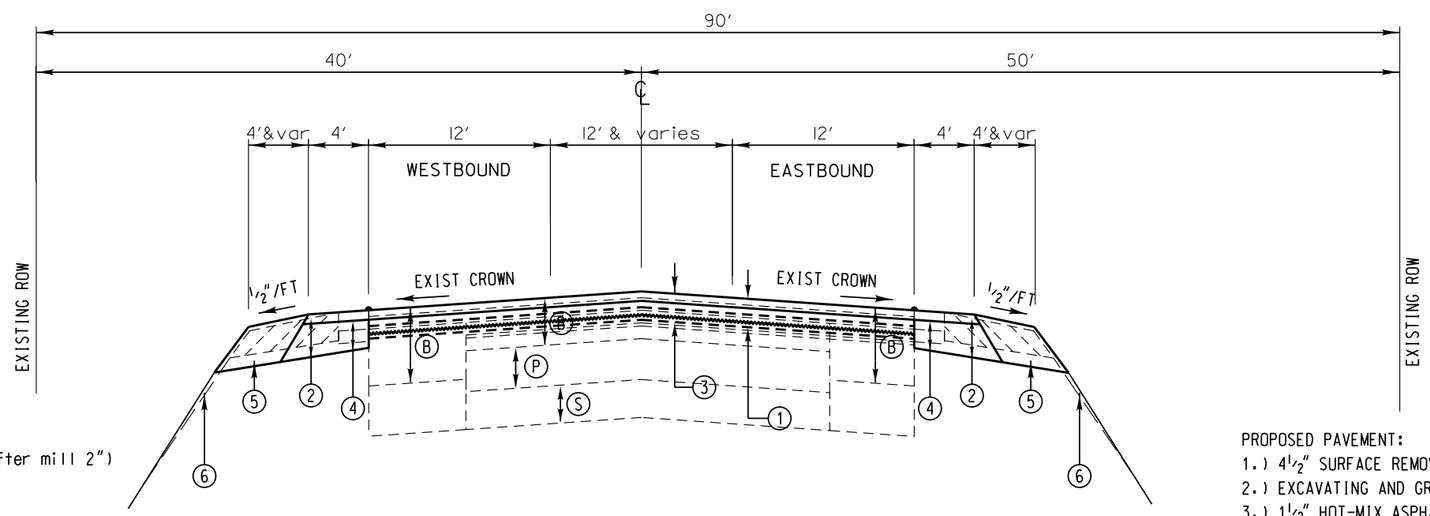

EXIST. PAVEMENT PER RECORDS:
- 1995 - 3" Bit. Binder and Surface Course (After mill 2")
- 1982 - 2" Bit. Binder and Surface Course
- 1974 - 2" Bit. Surface Plant Mix
- 1966 - 2" Hot Sand Seal
- 1963 - 2" B-5
- 1963 - 6½" Pozzolanic Base
- 1963 - 6" Sub-Base Granular, Type B

(B) BITUMINOUS
(P) POZZOLANIC BASE
(S) SUB-BASE GRANULAR

STA. 6+59.40 TO STA. 14+58.00

PROPOSED TYPICAL SECTION

PROPOSED PAVEMENT:
1.) 4½" SURFACE REMOVAL
2.) EXCAVATING AND GRADING EXISTING SHOULDERS
3.) 1½" HOT-MIX ASPHALT SURFACE COURSE, MIX "D", N50
2¼" HOT-MIX ASPHALT BINDER COURSE, IL-19.0, N50
AREA REFLECTIVE CRACK CONTROL TREATMENT
¾" LEVELING BINDER (MACHINE METHOD), N50
4.) 4½" HOT-MIX ASPHALT BINDER COURSE, IL-19.0, N50
5.) AGGREGATE SHOULDERS, TYPE B
6.) FURNISHING & PLACING TOPSOIL

SCALE: 1" = 10' HORIZ.
1" = 2' VERT.

REVISIONS / REMARKS	DATE	BY		
	/ /		SURVEYOR:	/
	/ /		DSGNR/LIAISON:	
	/ /		PLOTTED BY:	hdsxs 3/14/2016

6" VERT 0 — SCALES HORIZ. 0 5 10

21st STREET RESURFACING

LakeCounty Division of Transportation

TYPICAL CROSS SECTION
21st Street - SEC 146

ROUTE	SECTION	SECTION NUMBER	SHEET	SHEETS
CH67	146	15-00999-18-RS	13	128

21st STREET
TRAFFIC CONTROL PLAN

TRAFFIC CONTROL AND PROTECTION GENERAL NOTES

1. APPLICABLE STANDARDS

   701001-02, 701006-05, 701201-04, 701301-04, 701306-03, 701311-03, 701326-04, 701501-06, 701502-06, LC 701801, 701901-05, LC7000, LC7003, LC7004, LC7005, LC7200, LC7201

2. The permanent traffic control depicted hereon is the minimum requirement. Additional traffic control devices as specified by the above Highway Standards and the Special Provisions shall be placed by the contractor to the satisfaction of the engineer. All traffic control devices shall be considered incidental to the lump sum pay item "TRAFFIC CONTROL AND PROTECTION (SPECIAL)" unless otherwise indicated in the plans or special provisions.

3. All traffic control warning signs and associated signing mounted with the warning signs shall have black legends and borders on fluorescent orange reflective sheeting.

4. All construction signs, barricades and other devices required to control traffic shall be furnished, installed and maintained by the Contractor.

5. All traffic control devices shall be removed, covered or turned away from traffic immediately when they are no longer necessary. When a sign is covered, it's post shall have a reflective 3 inch x 6 inch delineator installed.

6. The sign spacing for the above Highway Standards shall be according to the Sign Spacing Table shown on this Traffic Control Plan.

7. Road name plates shall be installed on the "ROAD WORK AHEAD" signs at the intersections shown on this Traffic Control Plan. The road name plates shall be 9 inch blanks with 6 inch uppercase and 5 inch lowercase lettering. The road name plates shall be furnished by the Contractor.

8. "ROAD WORK AHEAD" signs shall be equipped with mono-directional Type A amber flashing lights.

SIGN NO.		SIGN TYPE
1		W20-1 (O)-48
2		W17-I 100 (O)-9xVARIABLE
3		M6-1R (O)-2115
4		M6-1L (O)-2115
5		M6-4 (O)-2115

POSTED SPEED LIMIT
21ST STREET. - 45 MPH
GREEN BAY RD. - 45 MPH
KENOSHA RD. - 45 MPH

TRAFFIC CONTROL SIGN SPACING TABLE	
55 MPH	500 FT.
45-50 MPH	350 FT.
<45 MPH	200 FT.

REVISIONS / REMARKS					
NO.	DESCRIPTION	DATE	BY	SURVEYOR:	/
		/ /		DSGNR/LIAISON:	
		/ /		PLOTTED BY:	hdsxs 3/3/2016

21ST STREET RESURFACING

LakeCounty Division of Transportation

TRAFFIC CONTROL PLAN
21ST STREET RESURFACING

ROUTE	SECTION	SECTION NUMBER	SHEET	SHEETS
CH67	146	15-00999-18-RS	14	128

FILE NAME: U:\Design\Shrestha\15-00999-18-RS 21st Street Resurfacing (131to Kenosha Rd)\B-00999$Sheet_0014_TCP.dgn

	DATE	BY		
	/ /		SURVEYOR:	/
	/ /		DSGNR/LIAISON:	
	/ /		PLOTTED BY:	hdsxs 3/3/2016

SCALE
0 100 200

21ST STREET RESURFACING

LakeCounty
Division of Transportation

TRAFFIC CONTROL PLAN

21ST STREET - SECTION 146

ROUTE	SECTION	SECTION NUMBER	SHEET	SHEETS
CH67	146	15-00999-18-RS	15	128

	DATE	BY		
	/ /		SURVEYOR:	/
	/ /		DSGNR/LIAISON:	
	/ /		PLOTTED BY:	hdsxs 3/3/2016

SCALE
0 100 200

21ST STREET RESURFACING

LakeCounty
Division of Transportation

TRAFFIC CONTROL PLAN

21ST STREET - SECTION 146

ROUTE	SECTION	SECTION NUMBER	SHEET	SHEETS
CH67	146	15-00999-18-RS	16	128

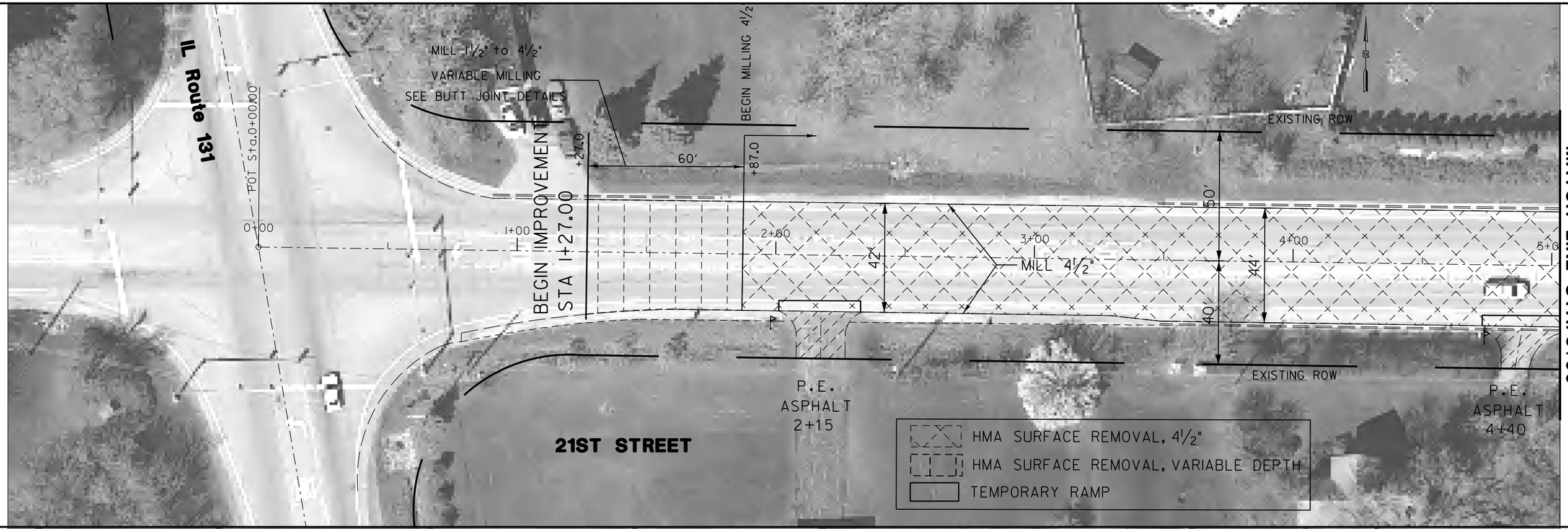

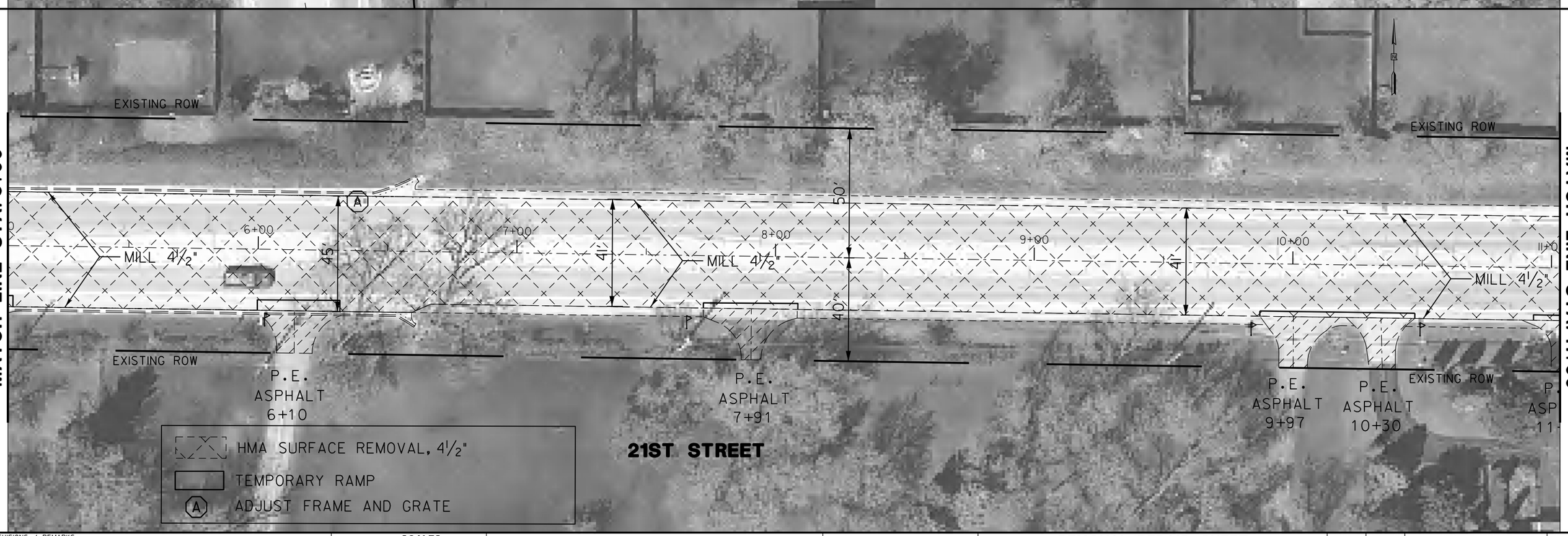

REVISIONS / REMARKS					
NO.	DESCRIPTION	DATE	BY	SURVEYOR:	/
		/ /		DSGNR/LIAISON:	
		/ /		PLOTTED BY:	hdsxs 3/3/2016

SCALES HORIZ. 0 20 40

21ST STREET RESURFACING

LakeCounty Division of Transportation

REMOVAL/REPAIR SHEET

STA. 00+00.00 TO 11+00.00

ROUTE	SECTION	SECTION NUMBER	SHEET	SHEETS
CH67	146	15-00999-18-RS	17	128

FILE NAME: U:\Design\Shrestha\15-00999-18-RS 21st Street Resurfacing (131 to Kenosha Rd)\B-00999$Sheet_0017_Removal_Sheet.dgn

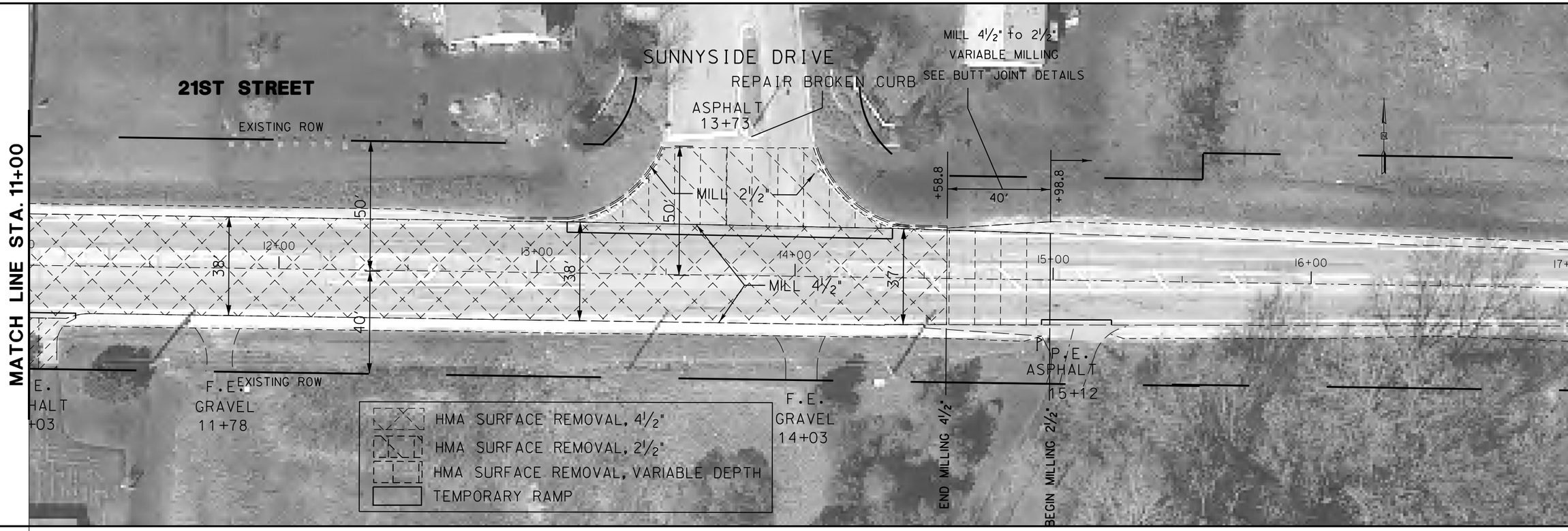

21ST STREET

SEE WIDENING PLANS
FROM STA 14+58.8 TO STA 27+00

MATCH LINE STA. 17+00

MATCH LINE STA. 23+00

REVISIONS / REMARKS					
NO.	DESCRIPTION	DATE	BY	SURVEYOR:	/
		/ /		DSGNR/LIAISON:	
		/ /		PLOTTED BY:	hdsxs 3/14/2016

SCALES
HORIZ.
0 20 40

21ST STREET RESURFACING

LakeCounty
Division of Transportation

REMOVAL/REPAIR SHEET
STA. 11+00.00 TO 23+00.00

ROUTE	SECTION	SECTION NUMBER	SHEET	SHEETS
CH67	146	15-00999-18-RS	18	128

FILE NAME: U:\Design\Shrestha\15-00999-18-RS 21st Street Resurfacing (131to Kenosha Rd)\B-00999$Sheet_0018_Removal_Sheet.dgn

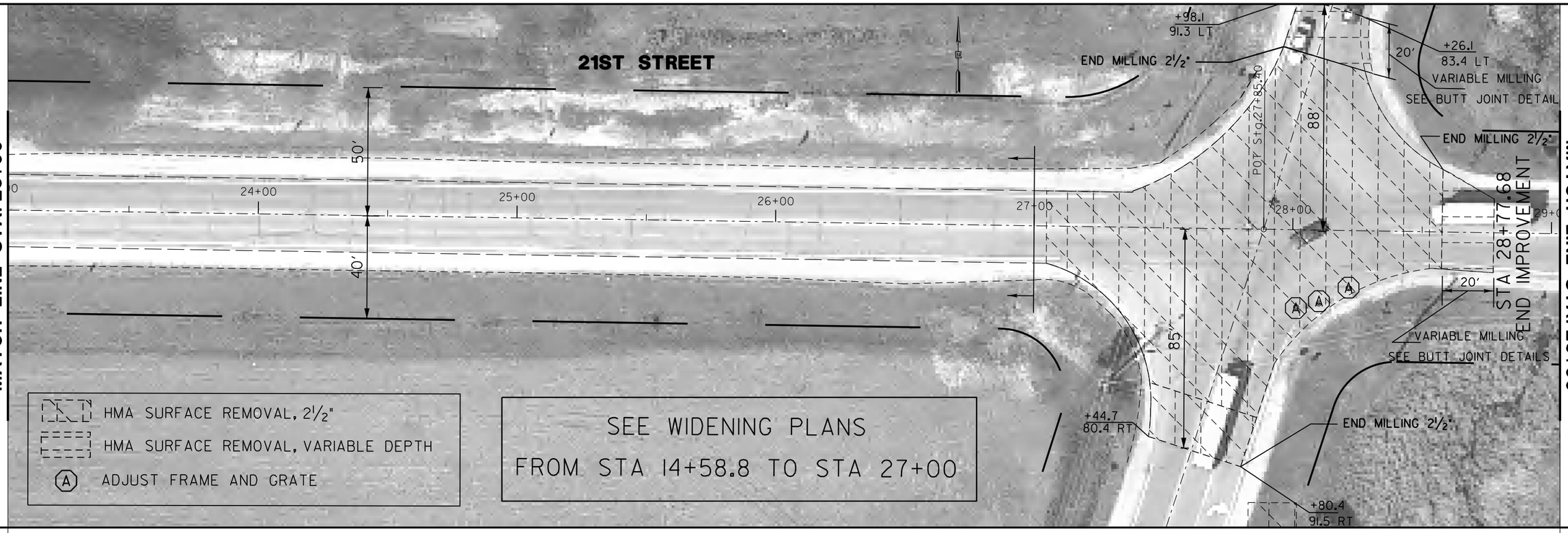

REVISIONS / REMARKS					
NO.	DESCRIPTION	DATE	BY	SURVEYOR:	/
		/ /		DSGNR/LIAISON:	
		/ /		PLOTTED BY:	hdsxs 3/14/2016

SCALES
HORIZ.
0 20 40

21ST STREET RESURFACING

LakeCounty
Division of Transportation

REMOVAL/REPAIR SHEET
STA. 11+00.00 TO 23+00.00

ROUTE	SECTION	SECTION NUMBER	SHEET	SHEETS
CH67	146	15-00999-18-RS	19	128

FILE NAME: U:\Design\Shrestha\15-00999-18-RS 21st Street Resurfacing (131 to Kenosha Rd)\B-00999$Sheet_0019_Removal_Sheet.dgn

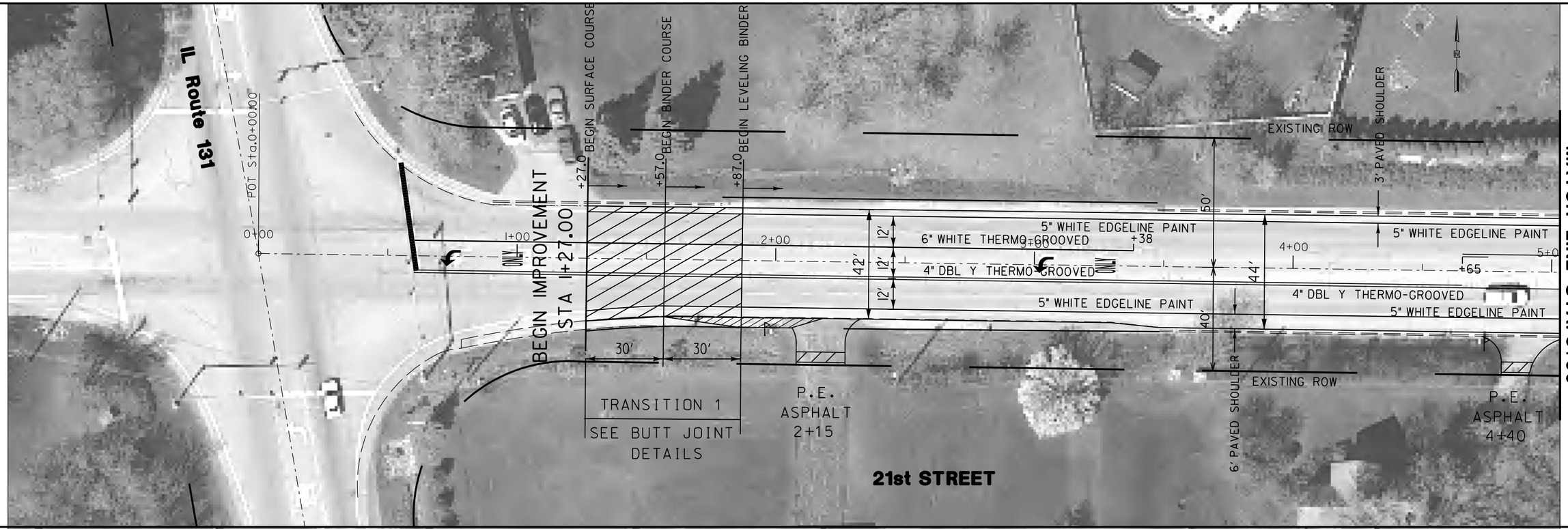

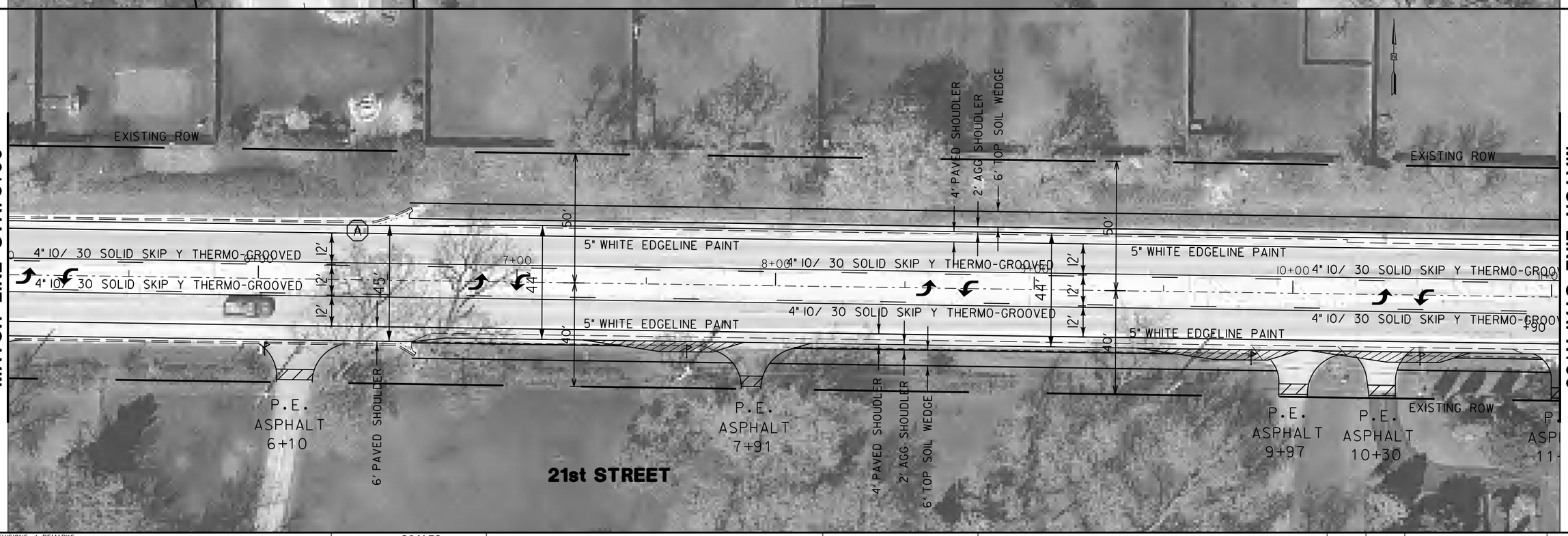

REVISIONS / REMARKS					
NO.	DESCRIPTION	DATE	BY	SURVEYOR:	/
		/ /		DSGNR/LIAISON:	
		/ /		PLOTTED BY:	hdsxs 3/3/2016

SCALES
HORIZ.
0 20 40

21st STREET RESURFACING

LakeCounty
Division of Transportation

PAVEMENT MARKING PLAN SHEET
STA. 00+00.00 TO 11+00.00

ROUTE	SECTION	SECTION NUMBER	SHEET	SHEETS
CH67	146	15-00999-18-RS	20	128

FILE NAME: U:\Design\Shrestha\15-00999-18-RS 21st Street Resurfacing (131 to Kenosha Rd)\B-00999$Sheet_0020_Plan_Sheet.dgn

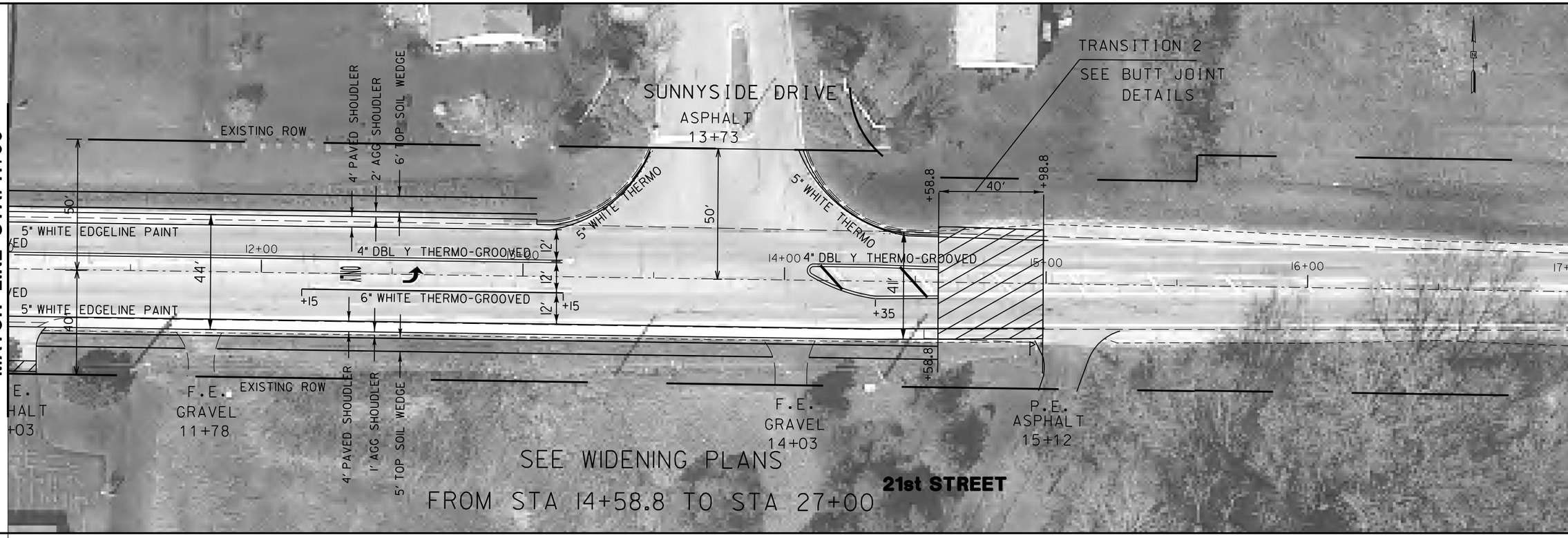

REVISIONS / REMARKS					
NO.	DESCRIPTION	DATE	BY	SURVEYOR:	/
		/ /		DSGNR/LIAISON:	
		/ /		PLOTTED BY:	hdsxs 3/14/2016

SCALES
HORIZ.
0 20 40

21st STREET RESURFACING

LakeCounty
Division of Transportation

PAVEMENT MARKING PLAN SHEET
STA. 11+00.00 TO 23+00.00

ROUTE	SECTION	SECTION NUMBER	SHEET	SHEETS
CH67	146	15-00999-18-RS	21	128

FILE NAME: U:\Design\Shrestha\15-00999-18-RS 21st Street Resurfacing (131 to Kenosha Rd)\B-00999$Sheet_0021_Plan_Sheet.dgn

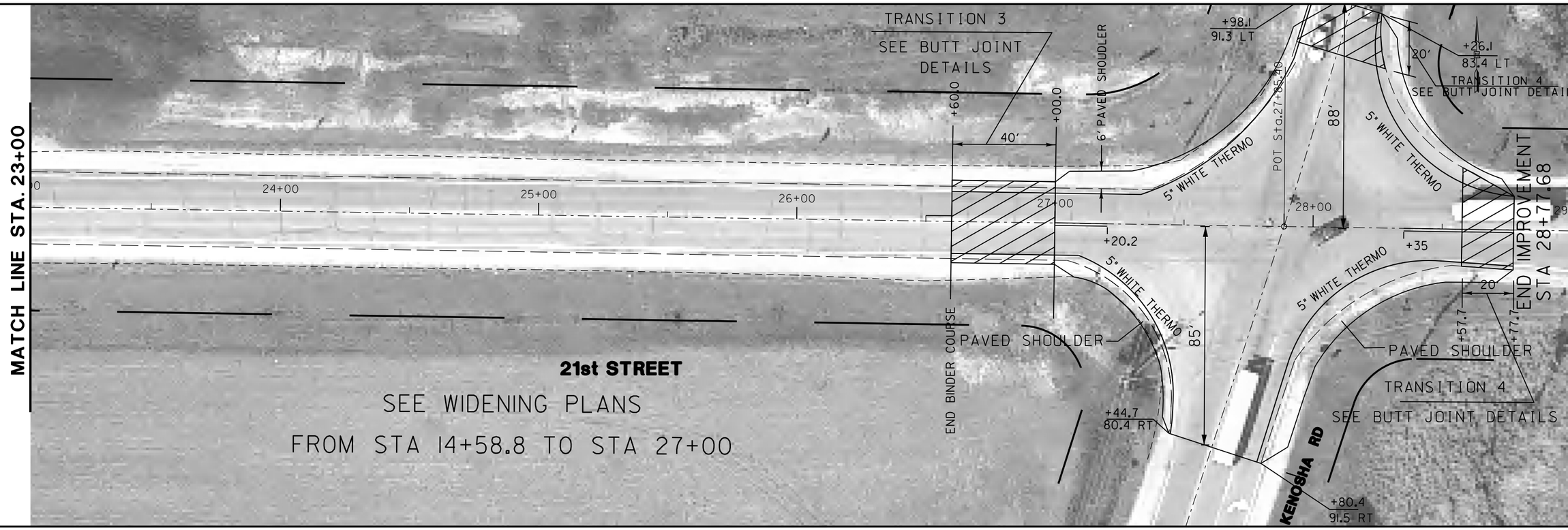

REVISIONS / REMARKS					
NO.	DESCRIPTION	DATE	BY	SURVEYOR:	/
		/ /		DSGNR/LIAISON:	
		/ /		PLOTTED BY:	hdsxs 3/14/2016

SCALES
HORIZ.
0 20 40

21st STREET RESURFACING

LakeCounty
Division of Transportation

PAVEMENT MARKING PLAN SHEET

STA. 23+00.00 TO 27+69.30

ROUTE	SECTION	SECTION NUMBER	SHEET	SHEETS
CH67	146	15-00999-18-RS	22	128

FILE NAME: U:\Design\Shrestha\15-00999-18-RS 21st Street Resurfacing (131 to Kenosha Rd)\B-00999$Sheet_0022_Plan_Sheet.dgn

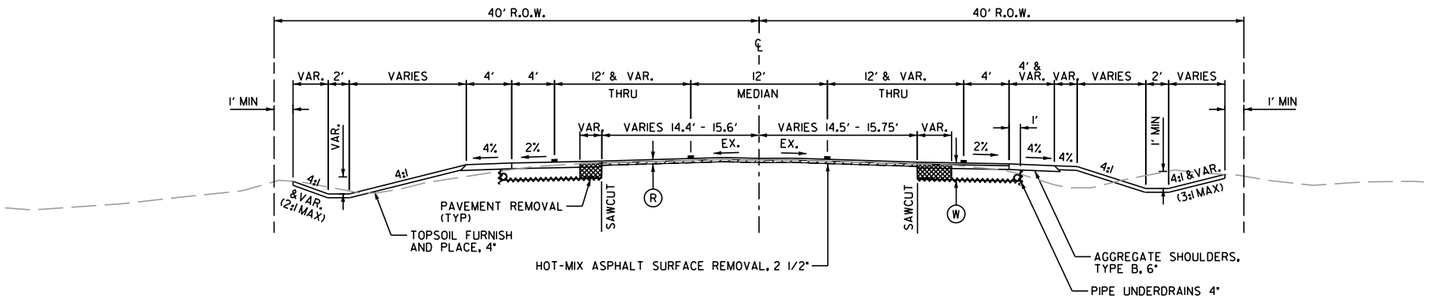

(R) TYPICAL RESURFACING PAVEMENT SECTION (SHEET 23)

(W) TYPICAL WIDENING PAVEMENT SECTION (SHEET 23)

STA. 14+58.8 TO 15+57.4

TYPICAL PAVEMENT SECTIONS

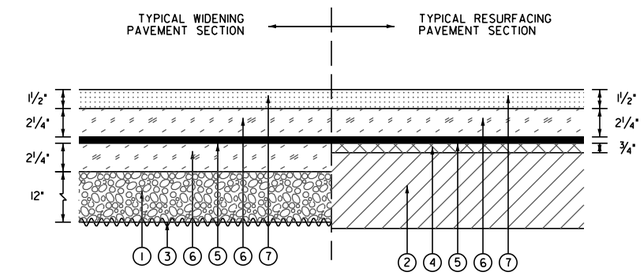

1. AGGREGATE SUBGRADE
2. EXISTING PAVEMENT
3. GEOTECHNICAL FABRIC FOR GROUND STABILIZATION
4. LEVELING BINDER (MACHINE METHOD), N50
5. AREA REFLECTIVE CRACK CONTROL FABRIC
6. HOT-MIX ASPHALT BINDER COURSE, IL-19.0, N50
7. HOT-MIX ASPHALT SURFACE COURSE, MIX "D", N50

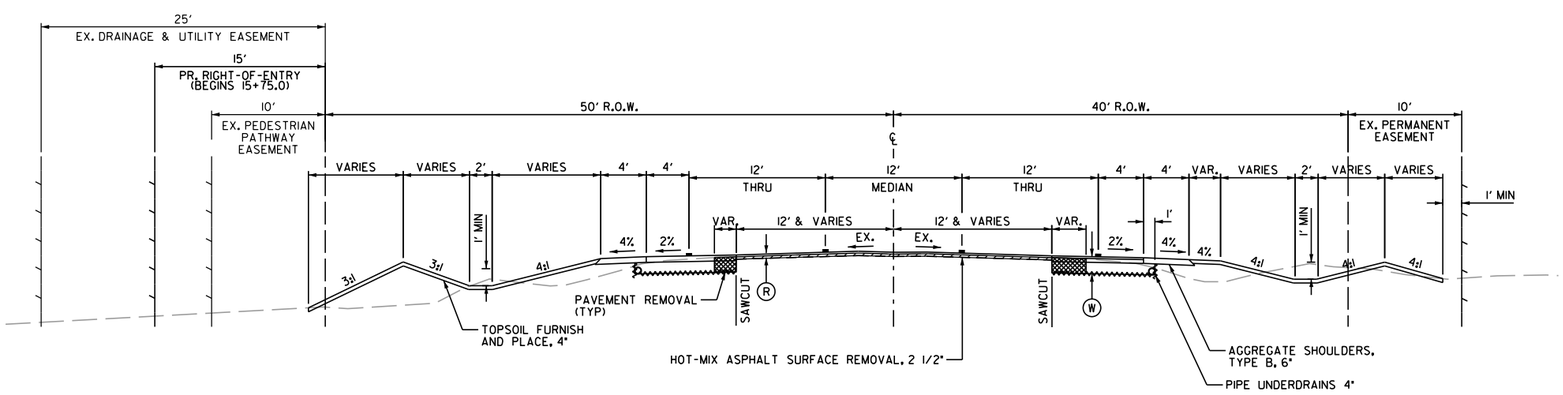

(R) TYPICAL RESURFACING PAVEMENT SECTION (SHEET 23)

(W) TYPICAL WIDENING PAVEMENT SECTION (SHEET 23)

STA. 15+57.4 TO 16+85.0

CONSTRUCTION NOTE:

THE CONTRACTOR'S ATTENTION IS DIRECTED TO SECTION 701.08 OF THE "STANDARD SPECIFICATIONS", WHICH LIMITS EXCAVATION AND CONSTRUCTION OPERATIONS TO ONE SIDE OF THE ROAD AT A TIME.

REVISIONS / REMARKS					
NO.	DESCRIPTION	DATE	BY	SURVEYOR:	___/___
		__/__/__	___	DSGNR/LIAISON:	___
		__/__/__	___	PLOTTED BY:	khdl8691 3/10/2016

21st STREET WIDENING

LakeCounty Division of Transportation

21ST STREET

TYPICAL SECTIONS

ROUTE	SECTION	SECTION NUMBER	SHEET	SHEETS
CH67	146	15-00999-18-RS	23	128

FILE NAME: U:\Design\Russo\15-00999-18-RS 21st Street Resurfacing (Access Improvements)\CAD\15-00999-18-RS.dgn

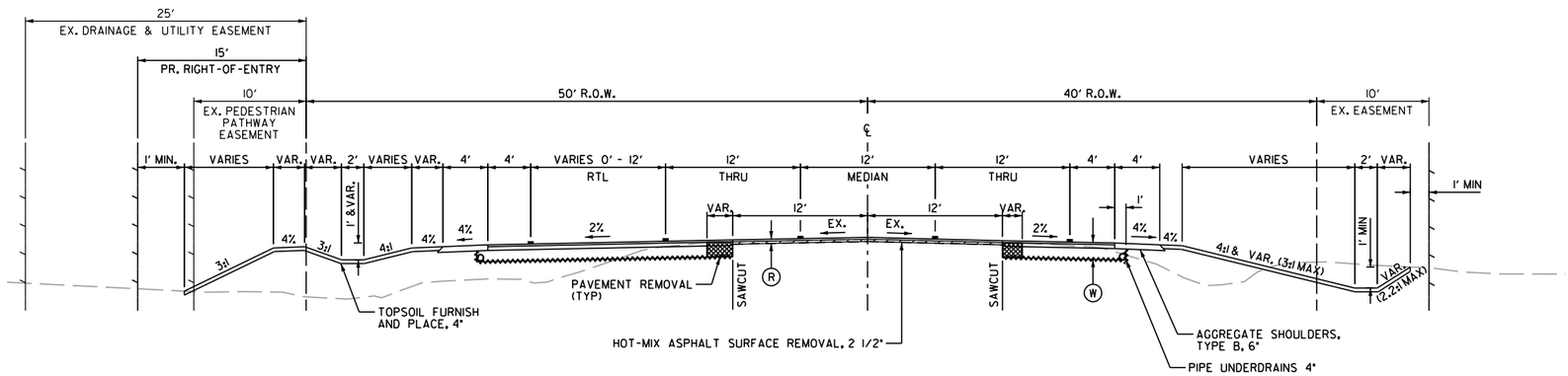

(R) TYPICAL RESURFACING PAVEMENT SECTION (SHEET 23)

(W) TYPICAL WIDENING PAVEMENT SECTION (SHEET 23)

STA. 16+85.0 TO 21+75.0

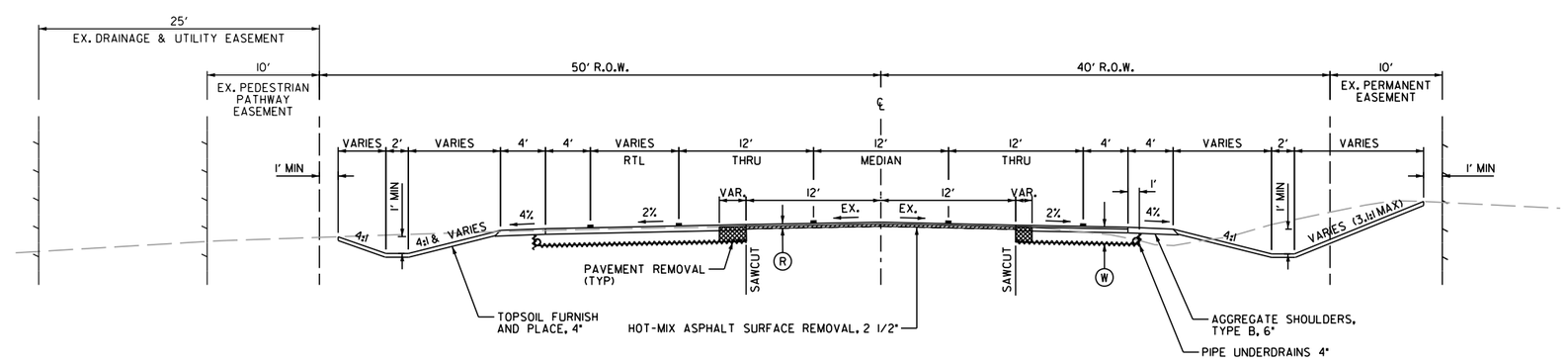

(R) TYPICAL RESURFACING PAVEMENT SECTION (SHEET 23)

(W) TYPICAL WIDENING PAVEMENT SECTION (SHEET 23)

STA. 21+75.0 TO 23.74.2

CONSTRUCTION NOTE:

THE CONTRACTOR'S ATTENTION IS DIRECTED TO SECTION 701.08 OF THE "STANDARD SPECIFICATIONS", WHICH LIMITS EXCAVATION AND CONSTRUCTION OPERATIONS TO ONE SIDE OF THE ROAD AT A TIME.

REVISIONS / REMARKS					
NO.	DESCRIPTION	DATE	BY	SURVEYOR:	___/___
				DSGNR/LIAISON:	___
		___/___/___	___	PLOTTED BY:	khdl8691 3/10/2016

21st STREET WIDENING

LakeCounty Division of Transportation

21ST STREET

TYPICAL SECTIONS

ROUTE	SECTION	SECTION NUMBER	SHEET	SHEETS
CH67	146	15-00999-18-RS	24	128

FILE NAME: U:\Design\Russo\15-00999-18-RS 21st Street Resurfacing (Access Improvements)\CAD\15-00999-18-RS.dgn

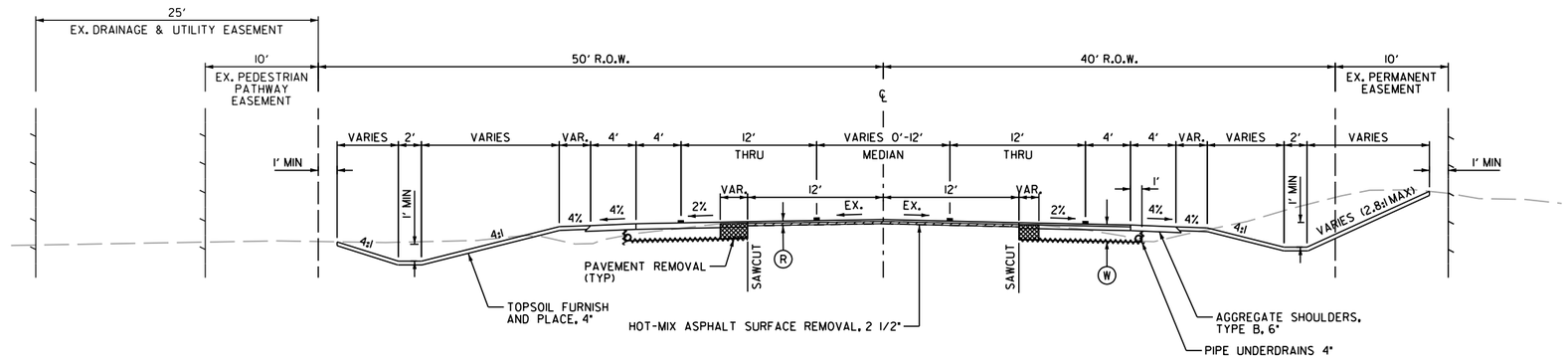

(R) TYPICAL RESURFACING PAVEMENT SECTION (SHEET 23)

(W) TYPICAL WIDENING PAVEMENT SECTION (SHEET 23)

STA. 23+74.2 TO 27+00.0

CONSTRUCTION NOTE:

THE CONTRACTOR'S ATTENTION IS DIRECTED TO SECTION 701.08 OF THE "STANDARD SPECIFICATIONS", WHICH LIMITS EXCAVATION AND CONSTRUCTION OPERATIONS TO ONE SIDE OF THE ROAD AT A TIME.

REVISIONS / REMARKS					
NO.	DESCRIPTION	DATE	BY	SURVEYOR:	___/___
		__/__/__		DSGNR/LIAISON:	
		__/__/__		PLOTTED BY:	khd18691 3/10/2016

21st STREET WIDENING

LakeCounty
Division of Transportation

21ST STREET

TYPICAL SECTIONS

ROUTE	SECTION	SECTION NUMBER	SHEET	SHEETS
CH67	146	15-00999-18-RS	25	128

FILE NAME: U:\Design\Russo\15-00999-18-RS 21st Street Resurfacing (Access Improvements)\CAD\15-00999-18-RS.dgn

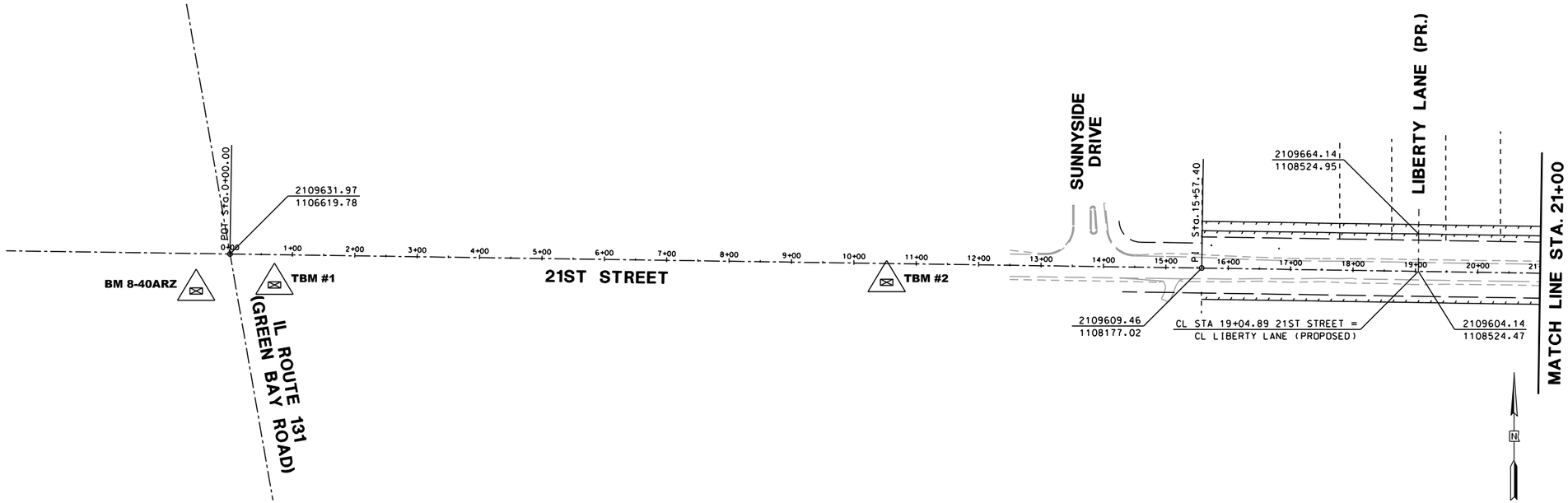

ELEVATION BENCHMARKS

NO.	DESCRIPTION	ELEVATION (DATUM: NAVD88)
LCM BM 8-40ARZ	"□" ON N'LY MOST CORNER DOUBLE HANDHOLE @ SW CORNER 21ST ST & GREEN BAY RD	739.72
LCM BM 8-40R	"□" N. SIDE CONC. LIGHT BASE @ NE CORNER 21ST ST & E. ENTRANCE TO ZION BENTON HIGH SCHOOL	730.48
TBM #1	MUELLER BOLT ON FH @ SE CORNER 21ST ST & GREEN BAY RD	739.97
TBM #2	SW FLANGE BOLT W/ CUT "X" ON FH @ 4311 21ST ST	724.64
TBM #4	SE FLANGE BOLT W/ "X" ON FH @ SE CORNER 21ST ST & KENOSHA RD	709.67

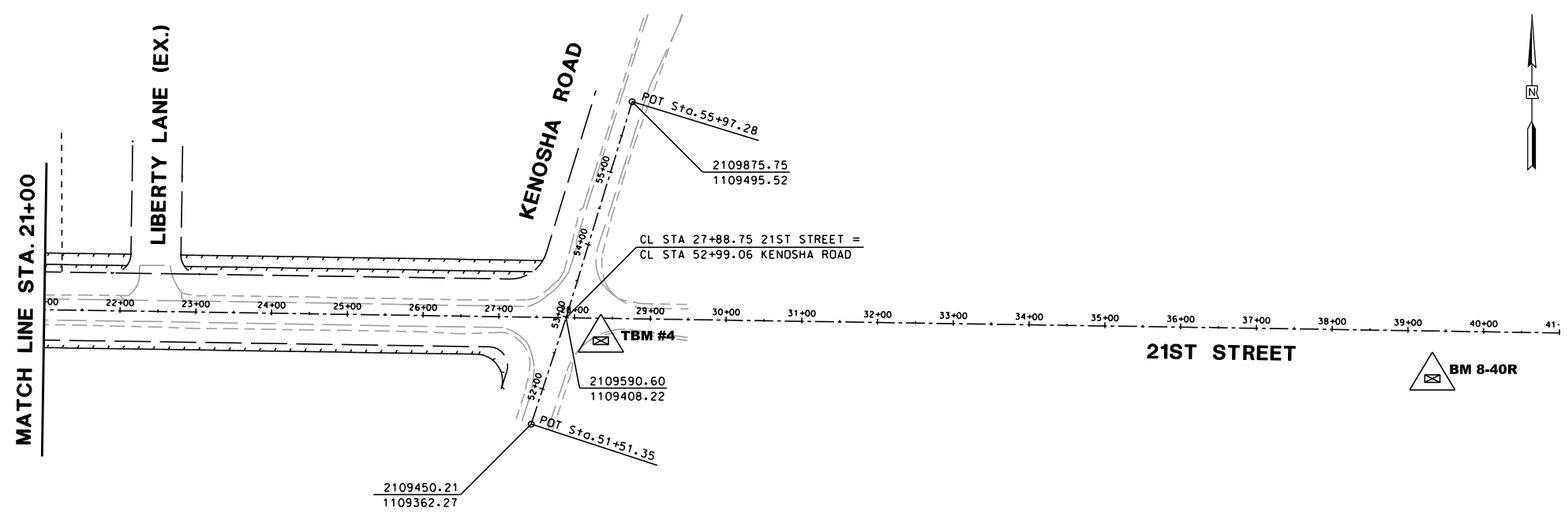

REVISIONS / REMARKS					
NO.	DESCRIPTION	DATE	BY	SURVEYOR:	___/___
		__/__/__		DSGNR/LIAISON:	
		__/__/__		PLOTTED BY:	khdl8691 3/10/2016

SCALES HORIZ. 0 100 200

21st STREET WIDENING

LakeCounty Division of Transportation

21ST STREET

ALIGNMENT AND TIES

ROUTE	SECTION	SECTION NUMBER	SHEET	SHEETS
CH67	146	15-00999-18-RS	26	128

FILE NAME: U:\Design\Russo\15-00999-18-RS 21st Street Resurfacing (Access Improvements)\CAD\15-00999-18-RS.dgn

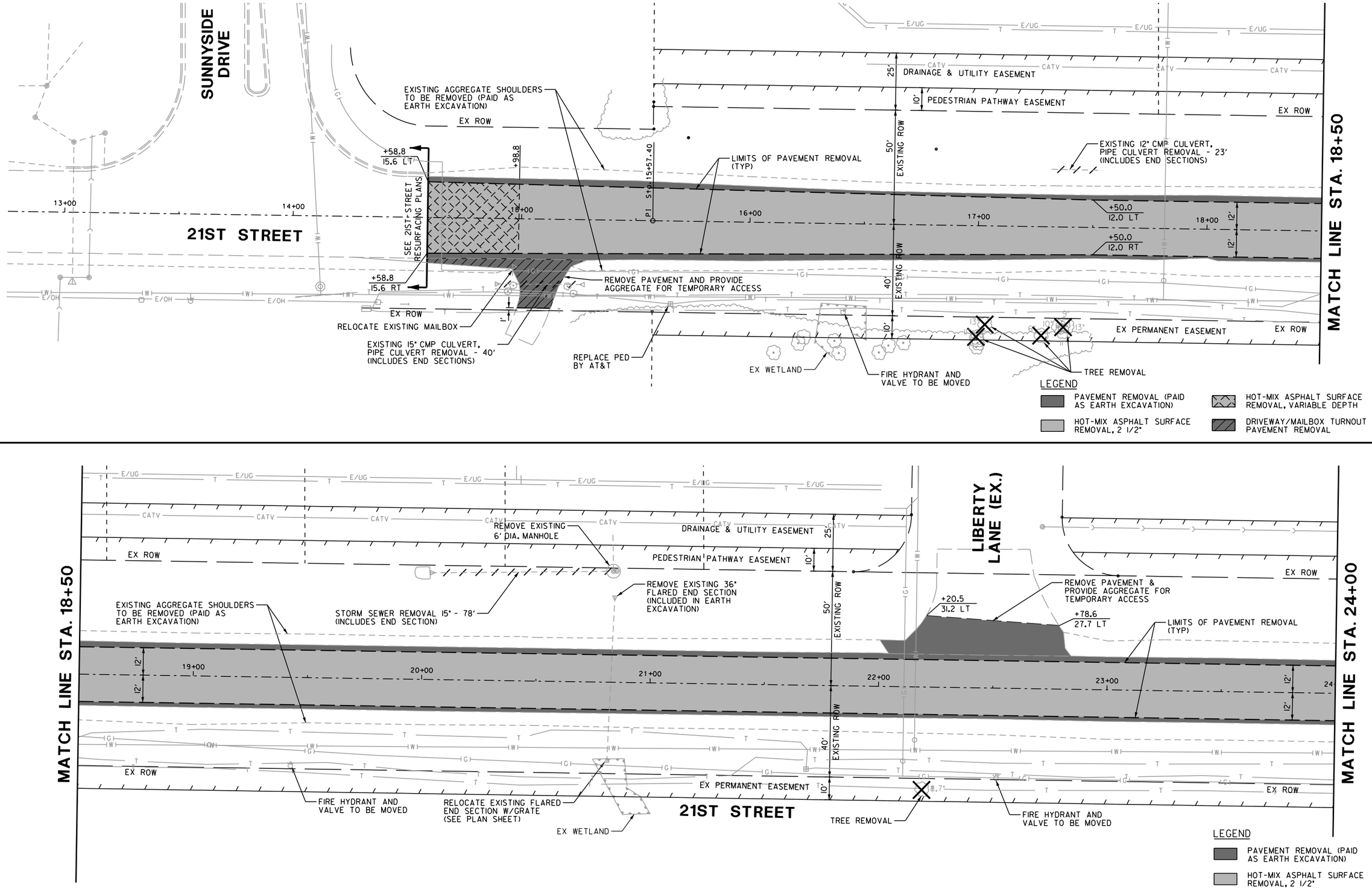

REVISIONS / REMARKS					
NO.	DESCRIPTION	DATE	BY	SURVEYOR:	
				DSGNR/LIAISON:	
				PLOTTED BY: khdi8691 3/14/2016	

SCALES HORIZ. 0 20 40

21st STREET WIDENING

LakeCounty Division of Transportation

REMOVAL PLAN

STA. 18+50.00 TO 24+00.00

ROUTE	SECTION	SECTION NUMBER	SHEET	SHEETS
CH67	146	15-00999-18-RS	27	128

FILE NAME: U:\Design\Russo\15-00999-18-RS 21st Street Resurfacing (Access Improvements)\CAD\15-00999-18-RS.dgn

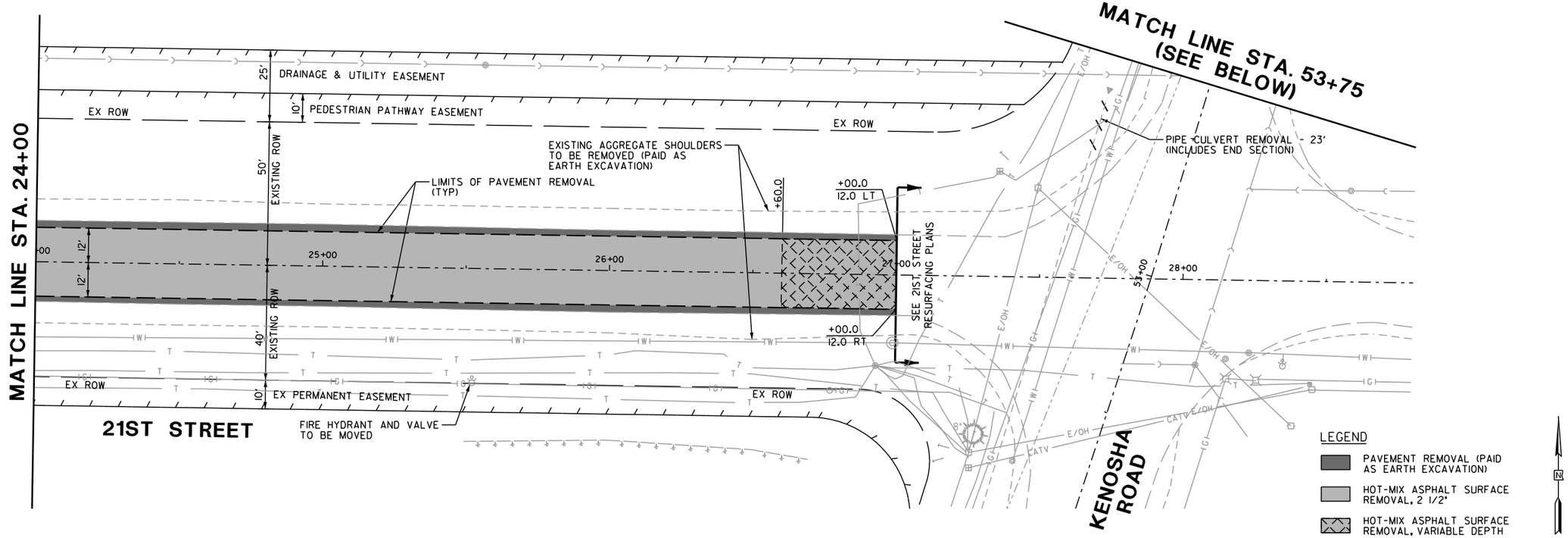

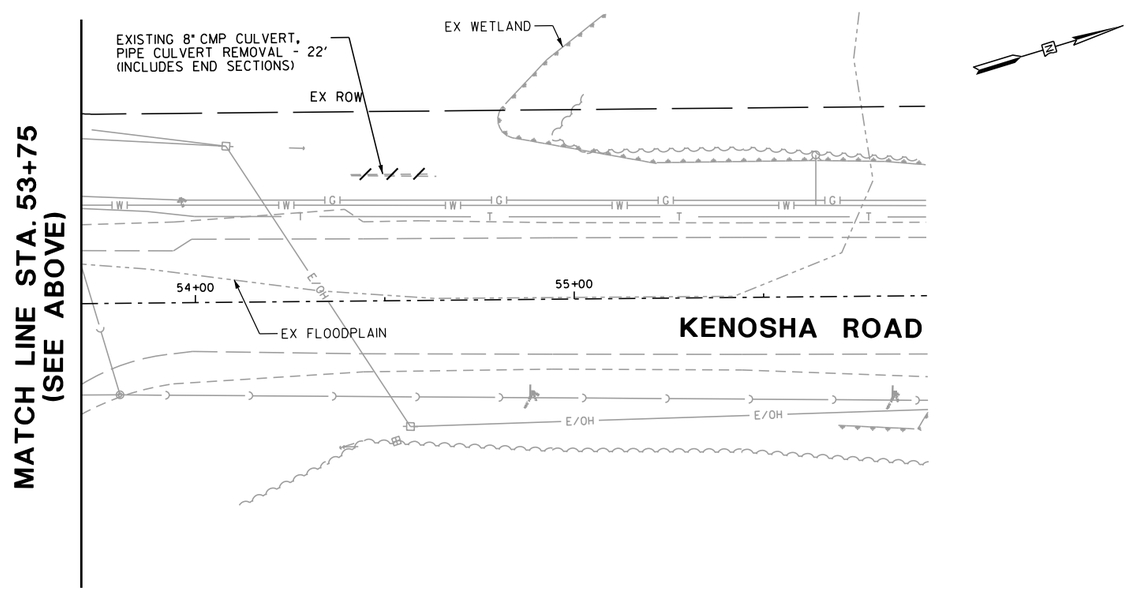

REVISIONS / REMARKS						SCALES HORIZ.	21st STREET WIDENING	LakeCounty Division of Transportation	REMOVAL PLAN	ROUTE	SECTION	SECTION NUMBER	SHEET	SHEETS
NO.	DESCRIPTION	DATE	BY	SURVEYOR:	___/___	0 20 40			STA. 18+50.00 TO 24+00.00	CH67	146	15-00999-18-RS	28	128
		__/__/__		DSGNR/LIAISON:	___									
		__/__/__		PLOTTED BY:	khdi8691 3/14/2016									

FILE NAME: U:\Design\Russo\15-00999-18-RS 21st Street Resurfacing (Access Improvements)\CAD\15-00999-18-RS.dgn

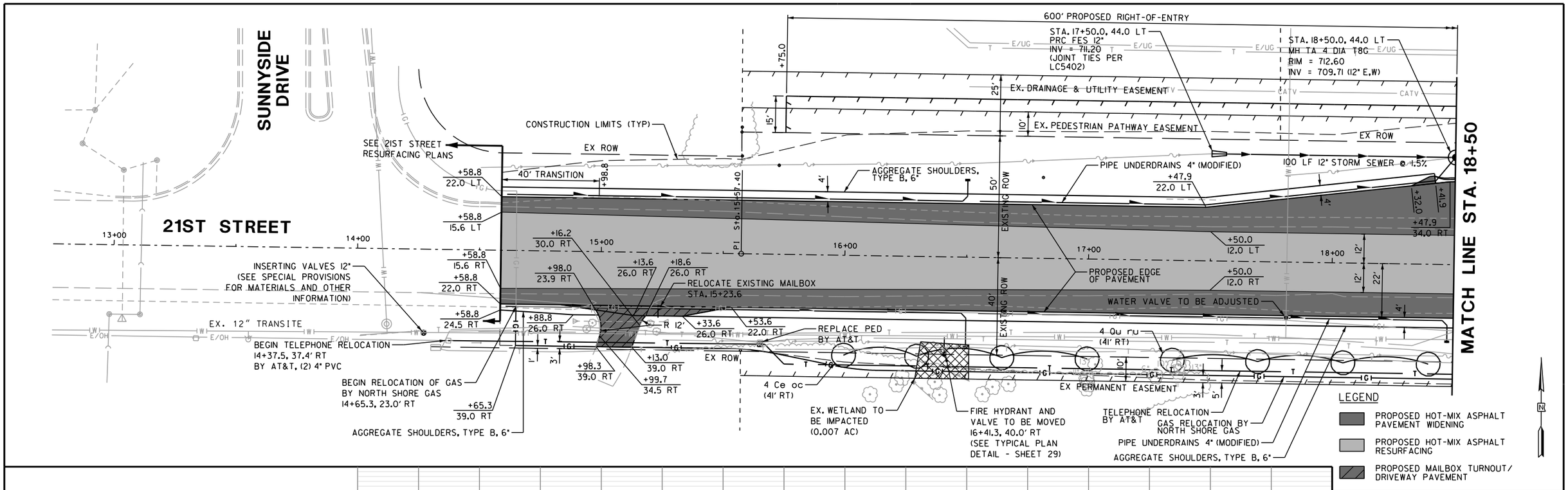

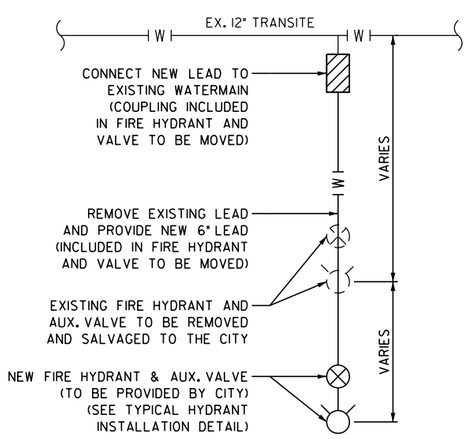

NOTE: SEE SPECIAL PROVISIONS FOR MATERIALS AND OTHER INFORMATION.

FIRE HYDRANT AND VALVE TO BE MOVED (TYPICAL PLAN)

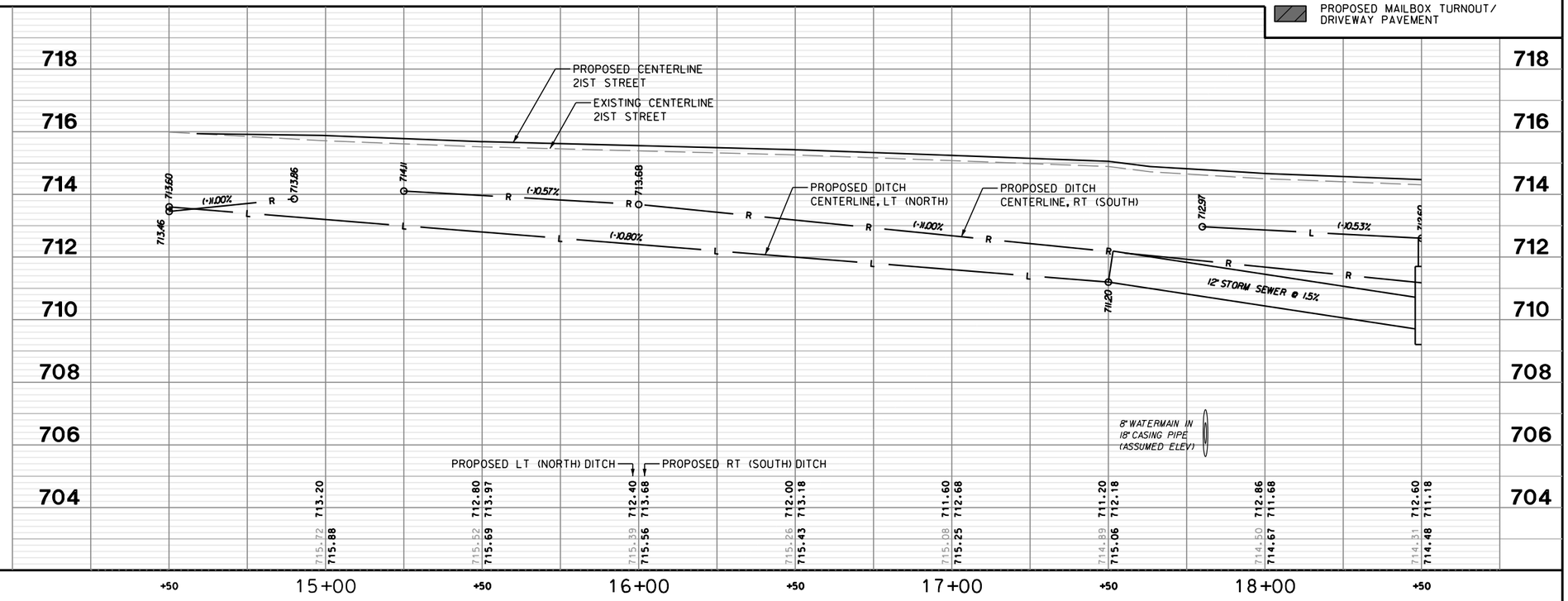

REVISIONS / REMARKS					
NO.	DESCRIPTION	DATE	BY	SURVEYOR:	___/___
				DSGNR/LIAISON:	___
		___/___/___	___	PLOTTED BY: khdl8691 3/10/2016	

SCALES: VERT. 2 0; HORIZ. 0 20 40

21st STREET WIDENING

LakeCounty Division of Transportation

21ST STREET

PLAN & PROFILE STA. 14+50 TO STA. 18+50

ROUTE	SECTION	SECTION NUMBER	SHEET	SHEETS
CH67	146	15-00999-18-RS	29	128

FILE NAME: U:\Design\Russo\15-00999-18-RS 21st Street Resurfacing (Access Improvements)\CAD\15-00999-18-RS.dgn

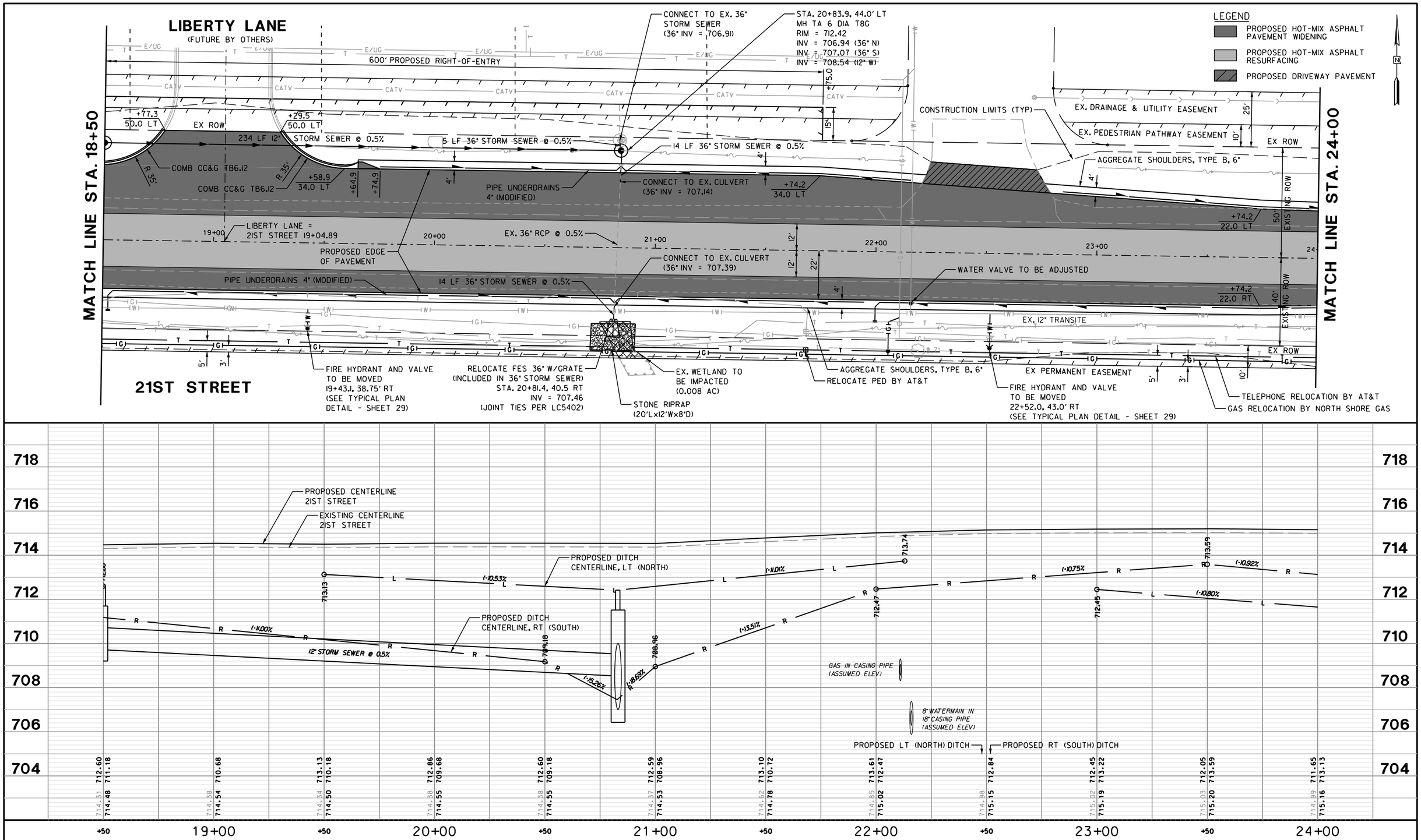

REVISIONS / REMARKS					
NO.	DESCRIPTION	DATE	BY	SURVEYOR:	
				DSGNR/LIAISON:	
				PLOTTED BY:	khdl8691 3/10/2016

SCALES: VERT. 2 0; HORIZ. 0 20 40

21st STREET WIDENING

LakeCounty Division of Transportation

21ST STREET

PLAN & PROFILE STA. 18+50 TO STA. 24+00

ROUTE	SECTION	SECTION NUMBER	SHEET	SHEETS
CH67	146	15-00999-18-RS	30	128

FILE NAME: U:\Design\Russo\15-00999-18-RS 21st Street Resurfacing (Access Improvements)\CAD\15-00999-18-RS.dgn

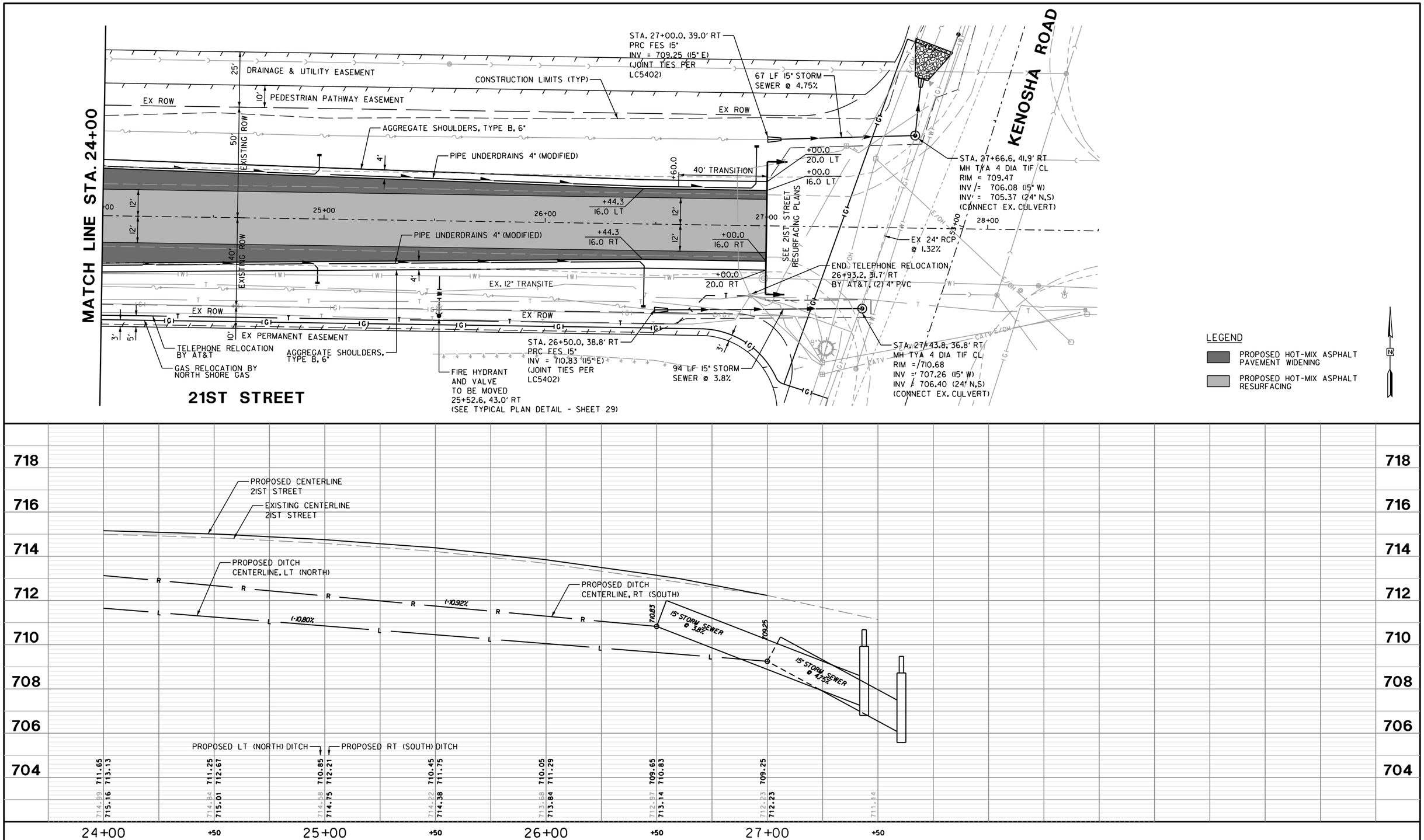

REVISIONS / REMARKS					
NO.	DESCRIPTION	DATE	BY	SURVEYOR:	
				DSGNR/LIAISON:	
				PLOTTED BY:	khdl8691 3/10/2016

SCALES: VERT. 2 0; HORIZ. 0 20 40

21st STREET WIDENING

LakeCounty Division of Transportation

21ST STREET

PLAN & PROFILE STA. 24+00 TO STA. 27+00

ROUTE	SECTION	SECTION NUMBER	SHEET	SHEETS
CH67	146	15-00999-18-RS	31	128

FILE NAME: U:\Design\Russo\15-00999-18-RS 21st Street Resurfacing (Access Improvements)\CAD\15-00999-18-RS.dgn

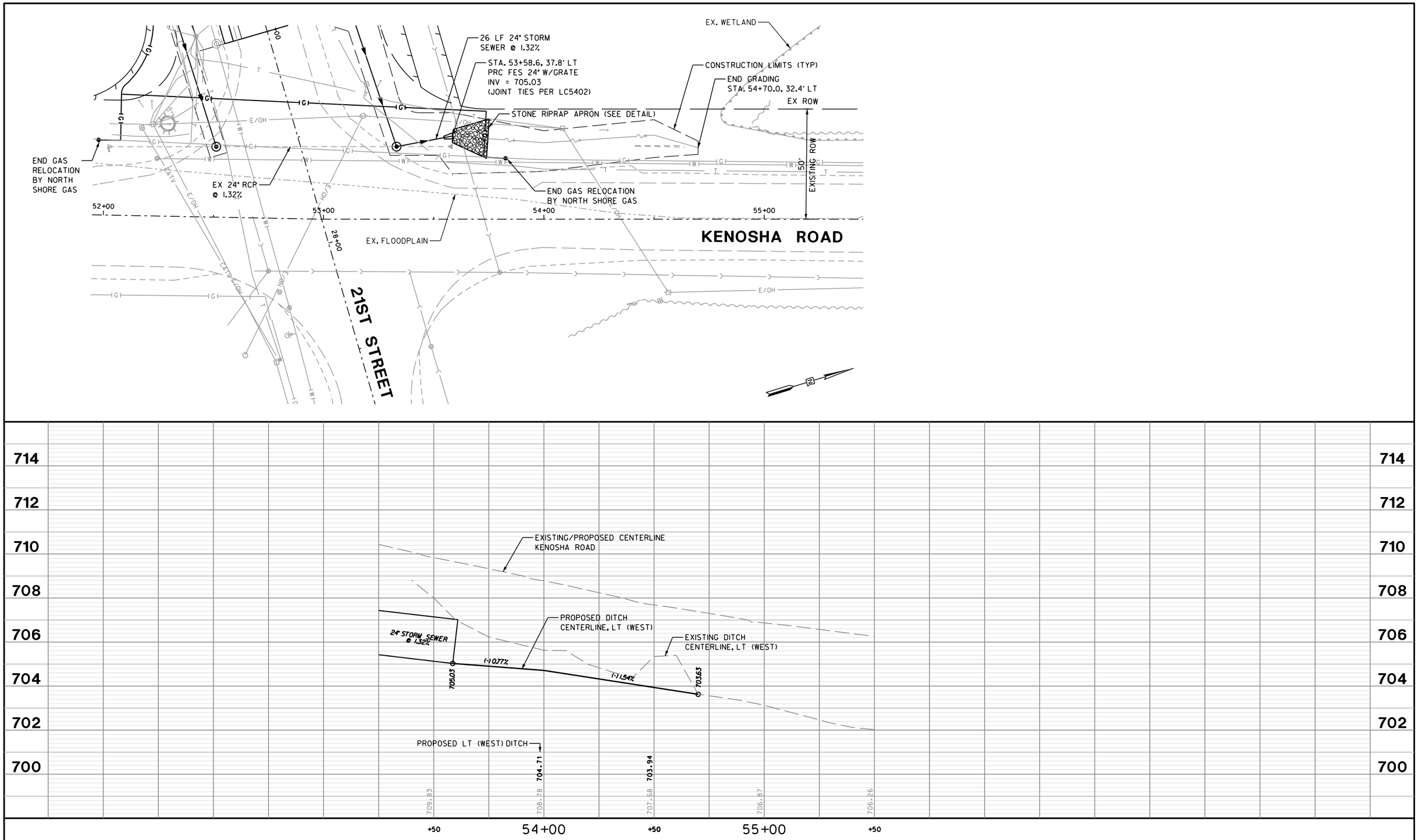

REVISIONS / REMARKS					
NO.	DESCRIPTION	DATE	BY	SURVEYOR:	__/__
		__/__/__		DSGNR/LIAISON:	
		__/__/__		PLOTTED BY:	khdl8691 3/10/2016

VERT 2 0

SCALES HORIZ. 0 20 40

21st STREET WIDENING

LakeCounty Division of Transportation

KENOSHA ROAD

PLAN & PROFILE STA. 52+00 TO STA. 55+10

ROUTE	SECTION	SECTION NUMBER	SHEET	SHEETS
CH67	146	15-00999-18-RS	32	128

FILE NAME: U:\Design\Russo\15-00999-18-RS 21st Street Resurfacing (Access Improvements)\CAD\15-00999-18-RS.dgn

EROSION CONTROL PLAN
& STORMWATER POLLUTION PREVENTION PLAN

THIS PROJECT DISTURBS 2.1 ACRES OF TOTAL LAND AREA.
COMPLIANCE WITH THE NATIONAL POLLUTION DISCHARGE ELIMINATION SYSTEM (NPDES) STORMWATER PERMIT IS ONLY NECESSARY IF A PROJECT DISTURBS 1.0 OR MORE ACRES OF TOTAL LAND AREA; AN NPDES STORMWATER PERMIT WILL BE REQUIRED FOR THIS PROJECT.

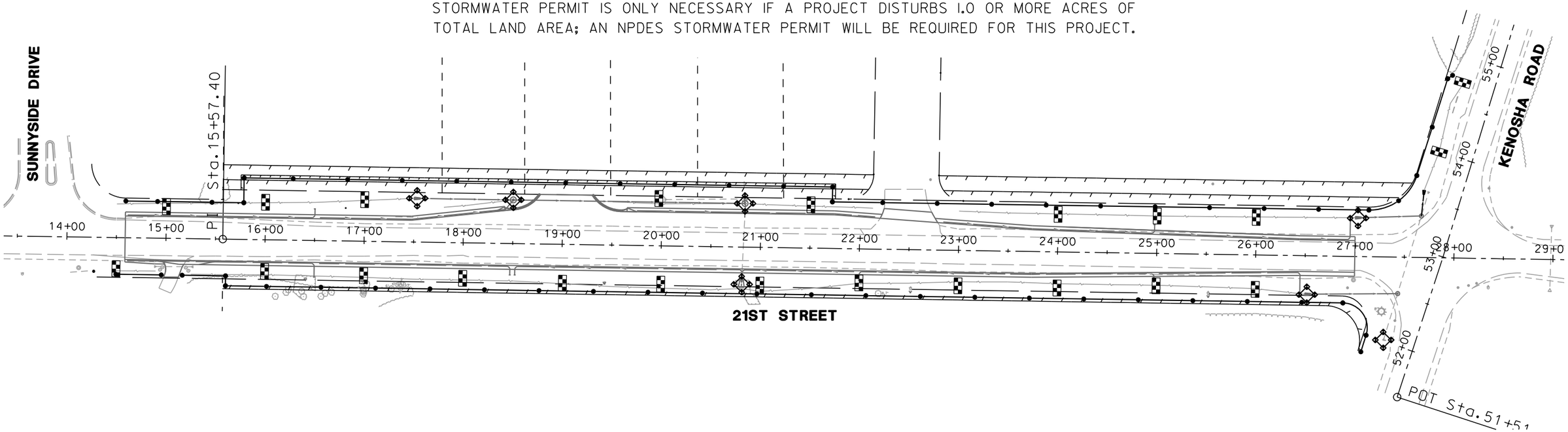

DRAINAGE BASINS OF LAKE COUNTY

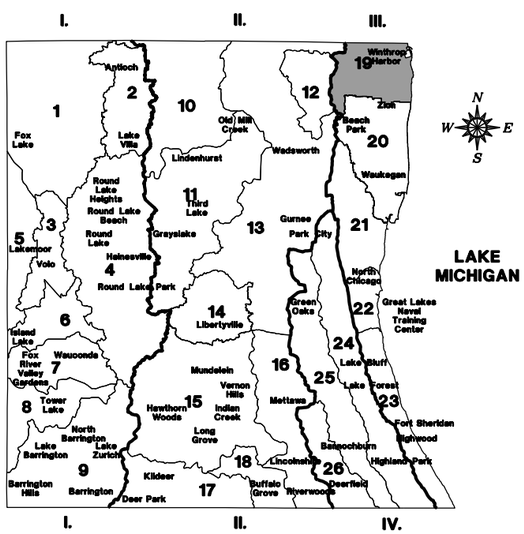

I. FOX RIVER WATERSHED
1. Upper Fox River
2. Sequoit Creek
3. Fish Lake Drain
4. Squaw Creek
5. Lower Fox River
6. Mutton Creek
7. Slocum Lake Drain
8. Tower Lake Drain
9. Flint Creek

II. DES PLAINES RIVER WATERSHED
10. North Mill Creek
11. Mill Creek
12. Newport Drainage Ditch
13. Upper Des Plaines River
14. Bull Creek
15. Indian Creek
16. Lower Des Plaines River
17. Buffalo Creek
18. Aptakisic Creek

III. LAKE MICHIGAN WATERSHED
19. Kellogg Creek
20. Dead River
21. Waukegan River
22. Pettibone Creek
23. Bluff/Ravine

IV. CHICAGO RIVER WATERSHED
24. Skokie River
25. Middle Fork
26. West Fork

GENERAL NOTES FOR SOIL EROSION CONTROL

1. PERIMETER EROSION BARRIER SHALL BE INSTALLED AT LOCATIONS SPECIFIED IN THE PLANS AT ONE FOOT OUTSIDE THE TOE OF SLOPE OR INSIDE THE RIGHT-OF-WAY WHICHEVER IS CLOSER TO THE CENTERLINE, OR AS DIRECTED BY THE ENGINEER PRIOR TO THE START OF ANY EARTHWORK, CULVERT, OR STORM SEWER CONSTRUCTION.

2. THE PERIMETER EROSION BARRIER SHALL REMAIN IN PLACE UNTIL ALL DISTURBED AREAS HAVE BEEN STABILIZED WITH VEGETATION. AT THIS TIME, THE PERIMETER EROSION BARRIER SHALL BE REMOVED AND AREAS DAMAGED BY THE PERIMETER EROSION BARRIER REMOVAL SHALL BE RESTORED. THE RESTORATION OF THE AREA DISTURBED BY THE PERIMETER EROSION BARRIER REMOVAL SHALL BE INCLUDED IN THE PAY ITEM OF PERIMETER EROSION BARRIER.

3. THE INSTALLATION & REMOVAL OF PERIMETER EROSION BARRIER SHALL BE PAID FOR UNDER THE ITEM OF PERIMETER EROSION BARRIER. MAINTENANCE OF PERIMETER EROSION BARRIER SHALL BE PAID FOR UNDER THE ITEM OF MAINTENANCE OF TEMPORARY EROSION CONTROL SYSTEMS.

4. TEMPORARY DITCH CHECKS SHALL BE CONSTRUCTED AS PER THE STANDARD DETAIL INCLUDED IN THE PLANS AS SHOWN HEREON OR AS DIRECTED BY THE ENGINEER. THE DITCH CHECKS SHALL BE INSTALLED AS GRADING PROGRESSES THROUGH THE PROJECT.

5. ALL DISTURBED AREAS SHALL BE SEEDED/SODDED AS SOON AS PRACTICAL AFTER CONSTRUCTION IN THAT AREA HAS CONCLUDED. (I.E. NORTH SIDE PERMANENTLY LANDSCAPED THEN SOUTH SIDE LATER OR VICE VERSA)

6. ALL SEEDED AREAS SHALL BE COVERED WITH EROSION CONTROL BLANKET.

LEGEND

- PERIMETER EROSION BARRIER
- TEMPROARY DITCH CHECK, URETHANE FOAM/GEOTEXTILE
- INLET PROTECTION, SPECIAL
- STORM SEWER
- DITCH FLOW OR OUTFALL
- INLET FILTER

ESTIMATED QUANTITIES

2,769 FEET - PERIMETER EROSION BARRIER

7 EACH - INLET PROTECTION, SPECIAL

REVISIONS / REMARKS					
NO.	DESCRIPTION	DATE	BY	SURVEYOR:	___/___
		__/__/__		DSGNR/LIAISON:	
		__/__/__		PLOTTED BY: khdl8691 3/14/2016	

SCALES HORIZ. 0 50 100

21st STREET WIDENING

LakeCounty Division of Transportation

EROSION CONTROL PLAN

ROUTE	SECTION	SECTION NUMBER	SHEET	SHEETS
CH67	146	15-00999-18-RS	33	128

FILE NAME: U:\Design\Russo\15-00999-18-RS 21st Street Resurfacing (Access Improvements)\CAD\15-00999-18-RS.dgn

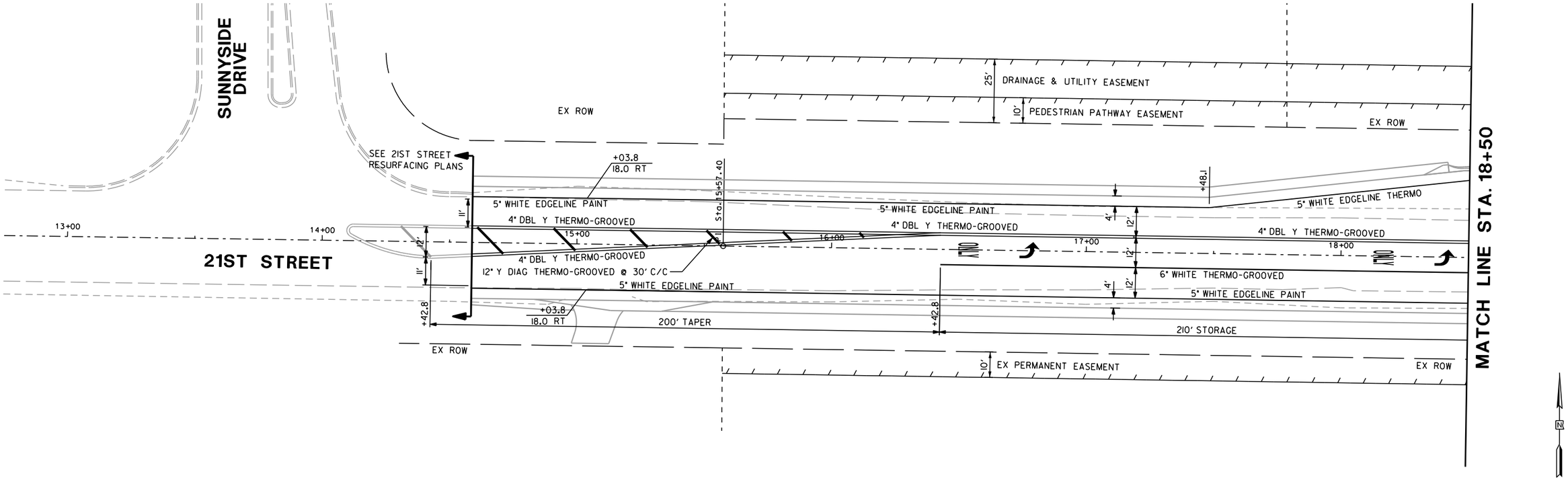

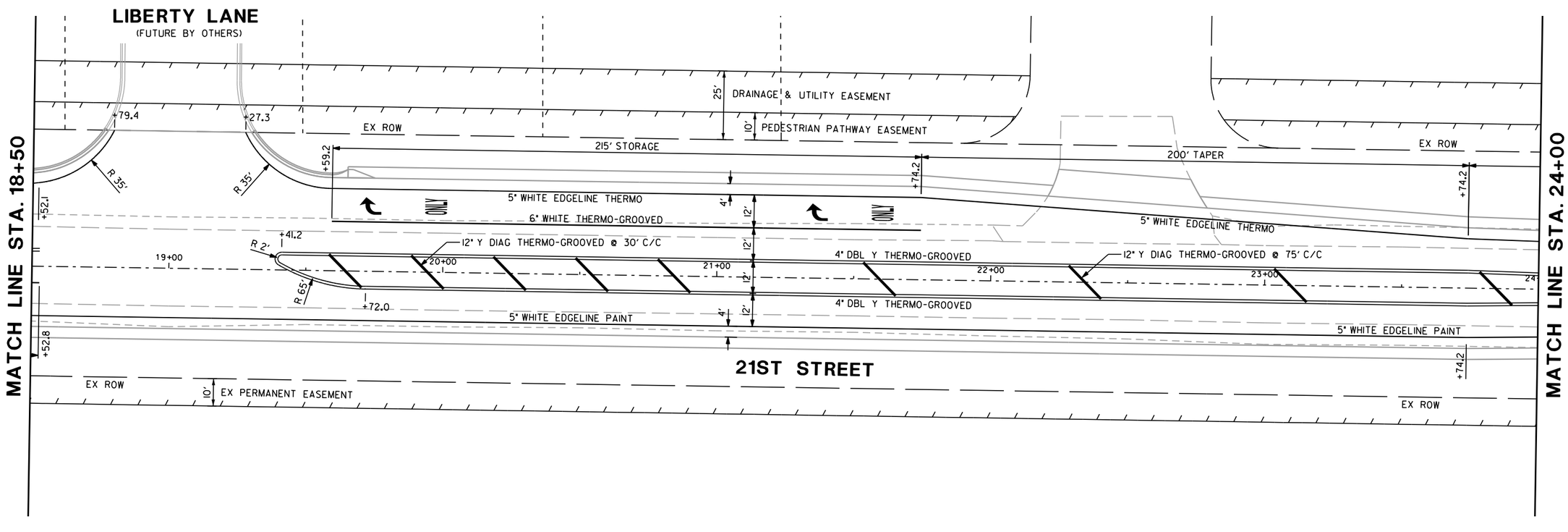

REVISIONS / REMARKS					
NO.	DESCRIPTION	DATE	BY	SURVEYOR:	
				DSGNR/LIAISON:	
				PLOTTED BY: khdi8691 3/10/2016	

SCALES HORIZ. 0 20 40

21st STREET WIDENING

LakeCounty Division of Transportation

PAVEMENT MARKING PLAN

STA. 18+50.00 TO 24+00.00

ROUTE	SECTION	SECTION NUMBER	SHEET	SHEETS
CH67	146	15-00999-18-RS	34	128

FILE NAME: U:\Design\Russo\15-00999-18-RS 21st Street Resurfacing (Access Improvements)\CAD\15-00999-18-RS.dgn

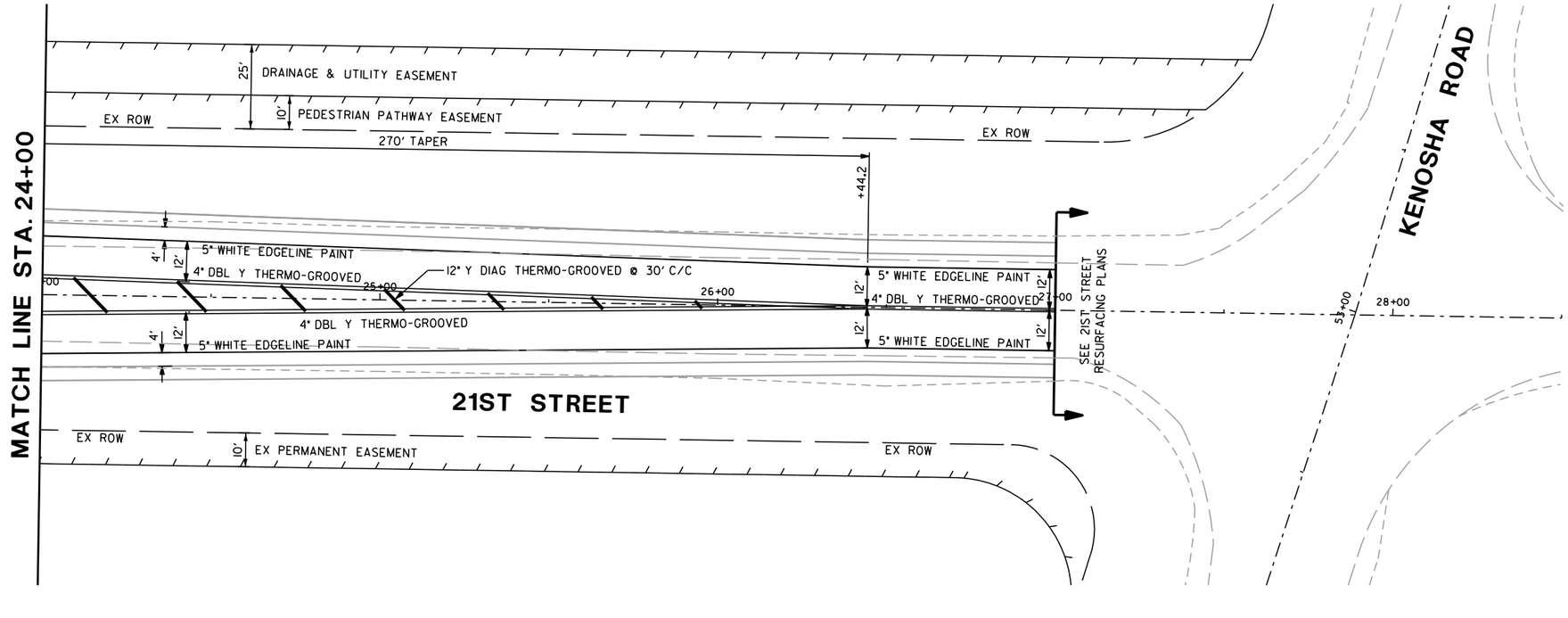

REVISIONS / REMARKS					
NO.	DESCRIPTION	DATE	BY	SURVEYOR:	___/___
		__/__/__		DSGNR/LIAISON:	
		__/__/__		PLOTTED BY: xhdi8691 3/10/2016	

SCALES
HORIZ.
0 20 40

21st STREET WIDENING

LakeCounty
Division of Transportation

PAVEMENT MARKING PLAN

STA. 18+50.00 TO 24+00.00

ROUTE	SECTION	SECTION NUMBER	SHEET	SHEETS
CH67	146	15-00999-18-RS	35	128

FILE NAME: U:\Design\Russo\15-00999-18-RS 21st Street Resurfacing (Access Improvements)\CAD\15-00999-18-RS.dgn

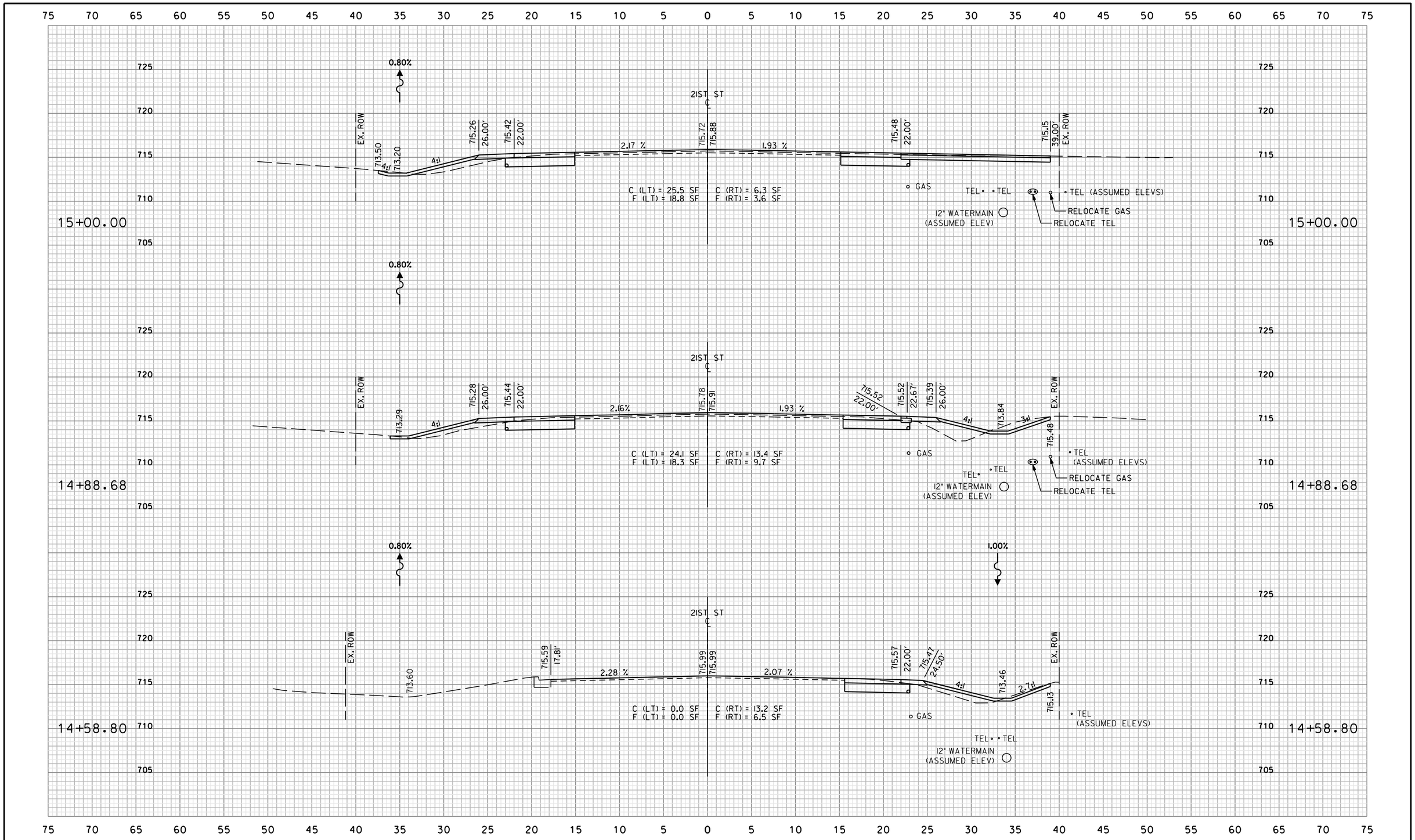

REVISIONS / REMARKS					
NO.	DESCRIPTION	DATE	BY	SURVEYOR:	___/___
		__/__/__		DSGNR/LIAISON:	___/___
		__/__/__		PLOTTED BY: khd18691 3/10/2016	

21st STREET WIDENING

LakeCounty
Division of Transportation

21ST STREET

CROSS SECTION STA. 14+50.00 TO STA. 15+00.00

ROUTE	SECTION	SECTION NUMBER	SHEET	SHEETS
CH67	146	15-00999-18-RS	36	128

FILE NAME: U:\Design\Russo\15-00999-18-RS 21st Street Resurfacing (Access Improvements)\CAD\15-00999-18-RS.dgn

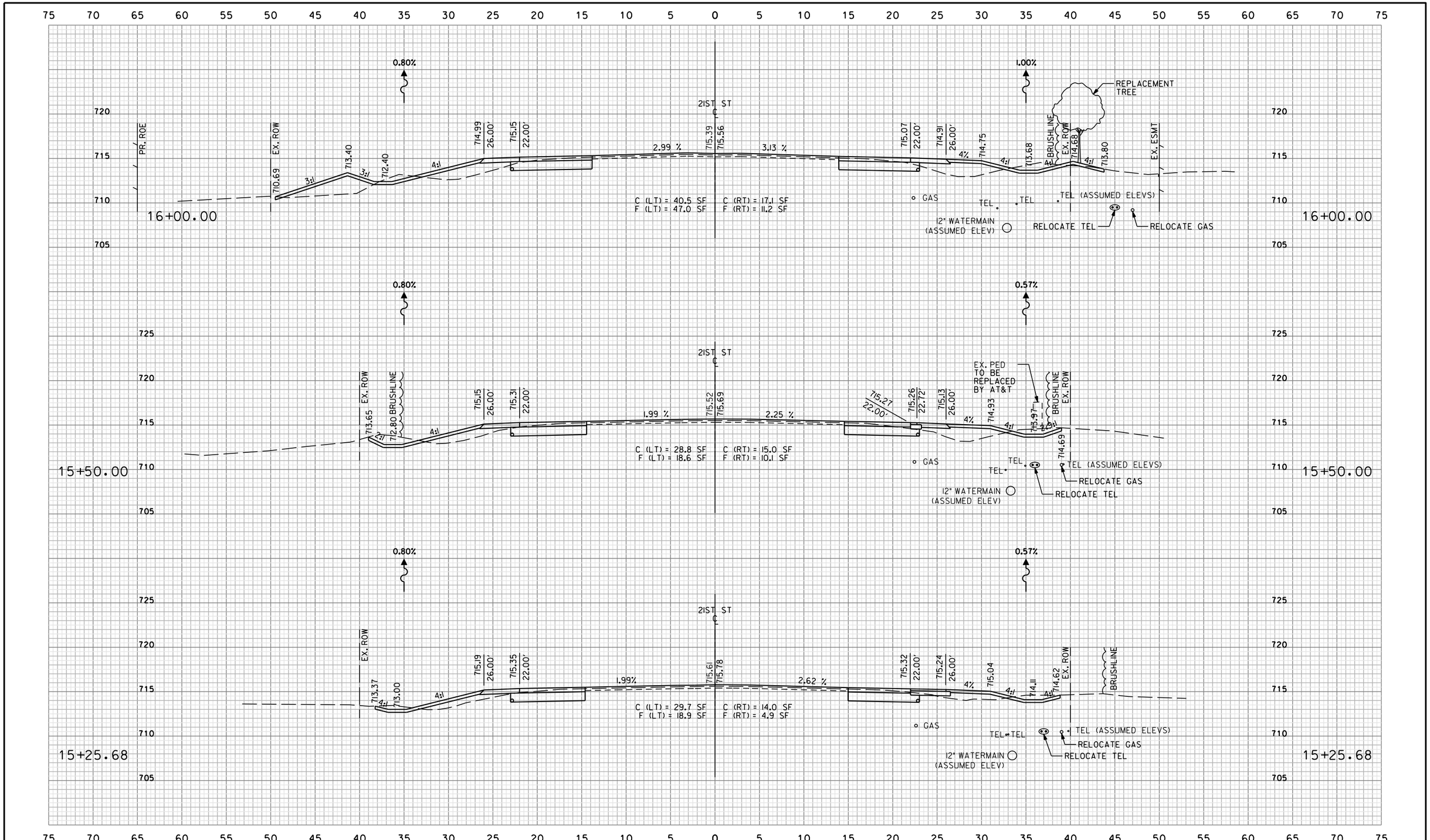

REVISIONS / REMARKS					
NO.	DESCRIPTION	DATE	BY	SURVEYOR:	___/___
		___/___/___	___	DSGNR/LIAISON:	___/___
		___/___/___	___	PLOTTED BY:	khdl8691 3/10/2016

21st STREET WIDENING

LakeCounty
Division of Transportation

21ST STREET
CROSS SECTION STA. 15+25.68 TO STA. 16+00.00

ROUTE	SECTION	SECTION NUMBER	SHEET	SHEETS
CH67	146	15-00999-18-RS	37	128

FILE NAME: U:\Design\Russo\15-00999-18-RS 21st Street Resurfacing (Access Improvements)\CAD\15-00999-18-RS.dgn

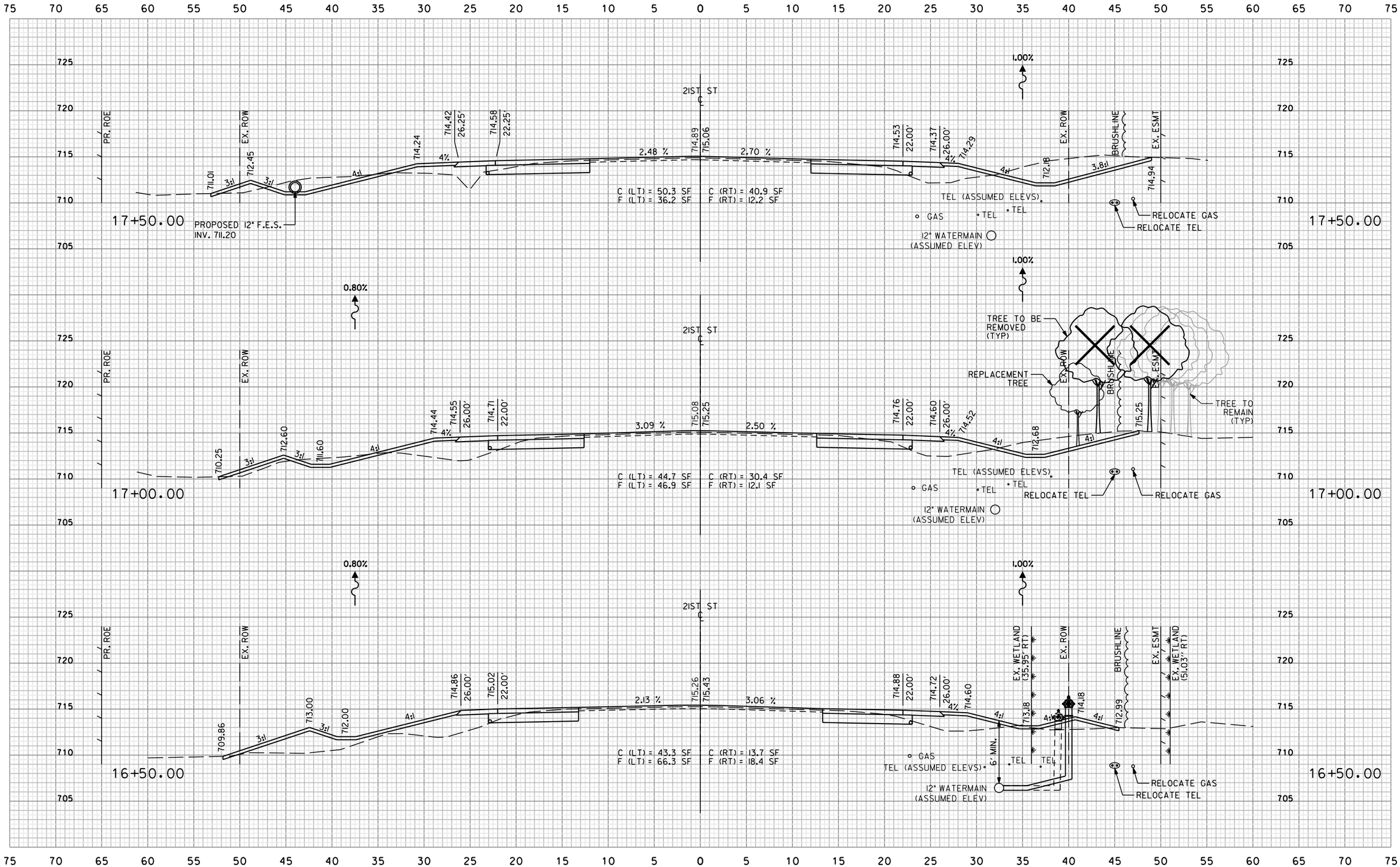

REVISIONS / REMARKS					
NO.	DESCRIPTION	DATE	BY	SURVEYOR:	___/___
		___/___/___	___	DSGNR/LIAISON:	___
		___/___/___	___	PLOTTED BY:	khdl8691 3/10/2016

21st STREET WIDENING

LakeCounty
Division of Transportation

21ST STREET

CROSS SECTION STA. 16+50.00 TO STA. 17+50.00

ROUTE	SECTION	SECTION NUMBER	SHEET	SHEETS
CH67	146	15-00999-18-RS	38	128

FILE NAME: U:\Design\Russo\15-00999-18-RS 21st Street Resurfacing (Access Improvements)\CAD\15-00999-18-RS.dgn

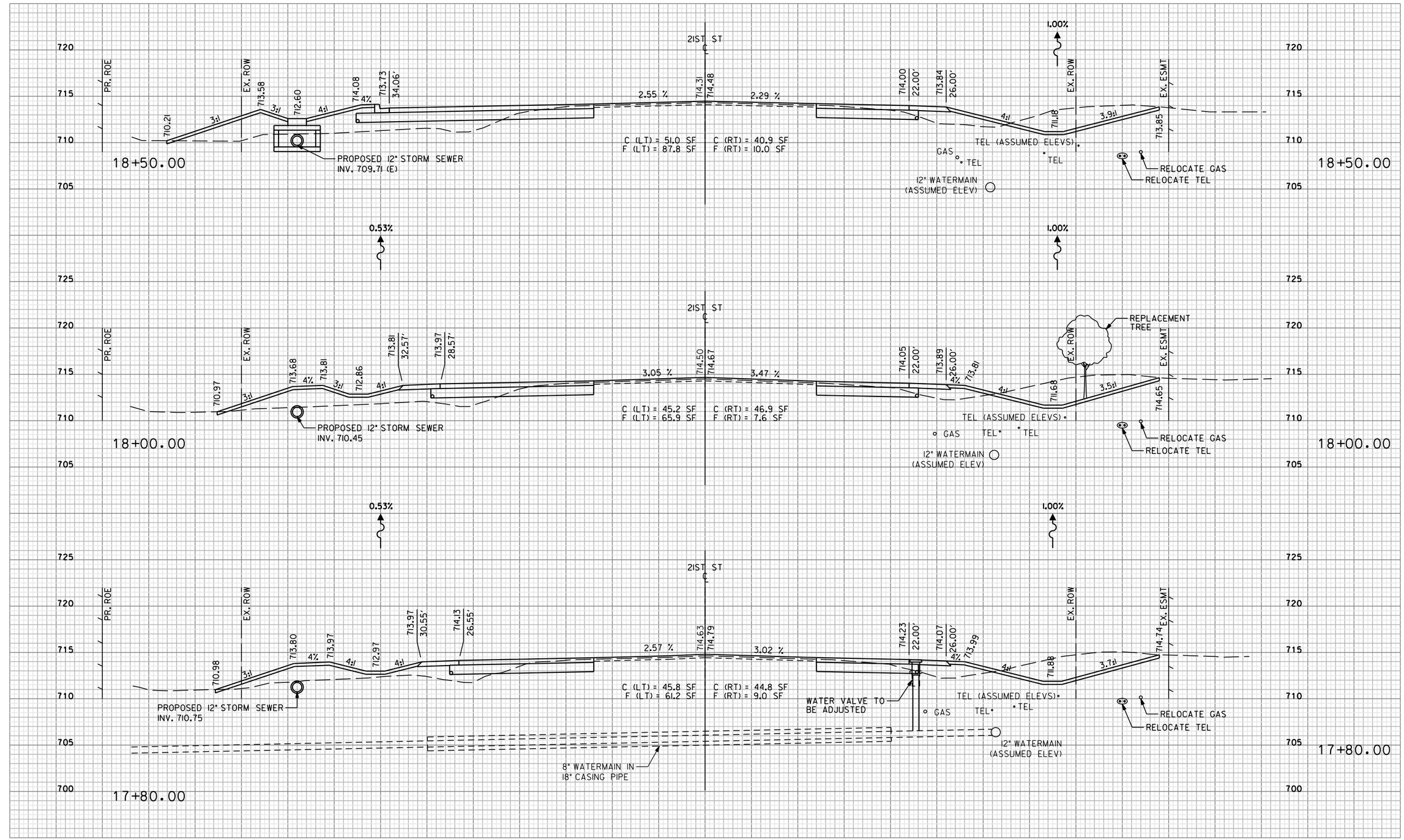

REVISIONS / REMARKS					
NO.	DESCRIPTION	DATE	BY	SURVEYOR:	___/___
		___/___/___	___	DSGNR/LIAISON:	___
		___/___/___	___	PLOTTED BY:	khdl8691 3/10/2016

21st STREET WIDENING

LakeCounty
Division of Transportation

21ST STREET

CROSS SECTION STA. 17+80.00 TO STA. 18+50.00

ROUTE	SECTION	SECTION NUMBER	SHEET	SHEETS
CH67	146	15-00999-18-RS	39	128

FILE NAME: U:\Design\Russo\15-00999-18-RS 21st Street Resurfacing (Access Improvements)\CAD\15-00999-18-RS.dgn

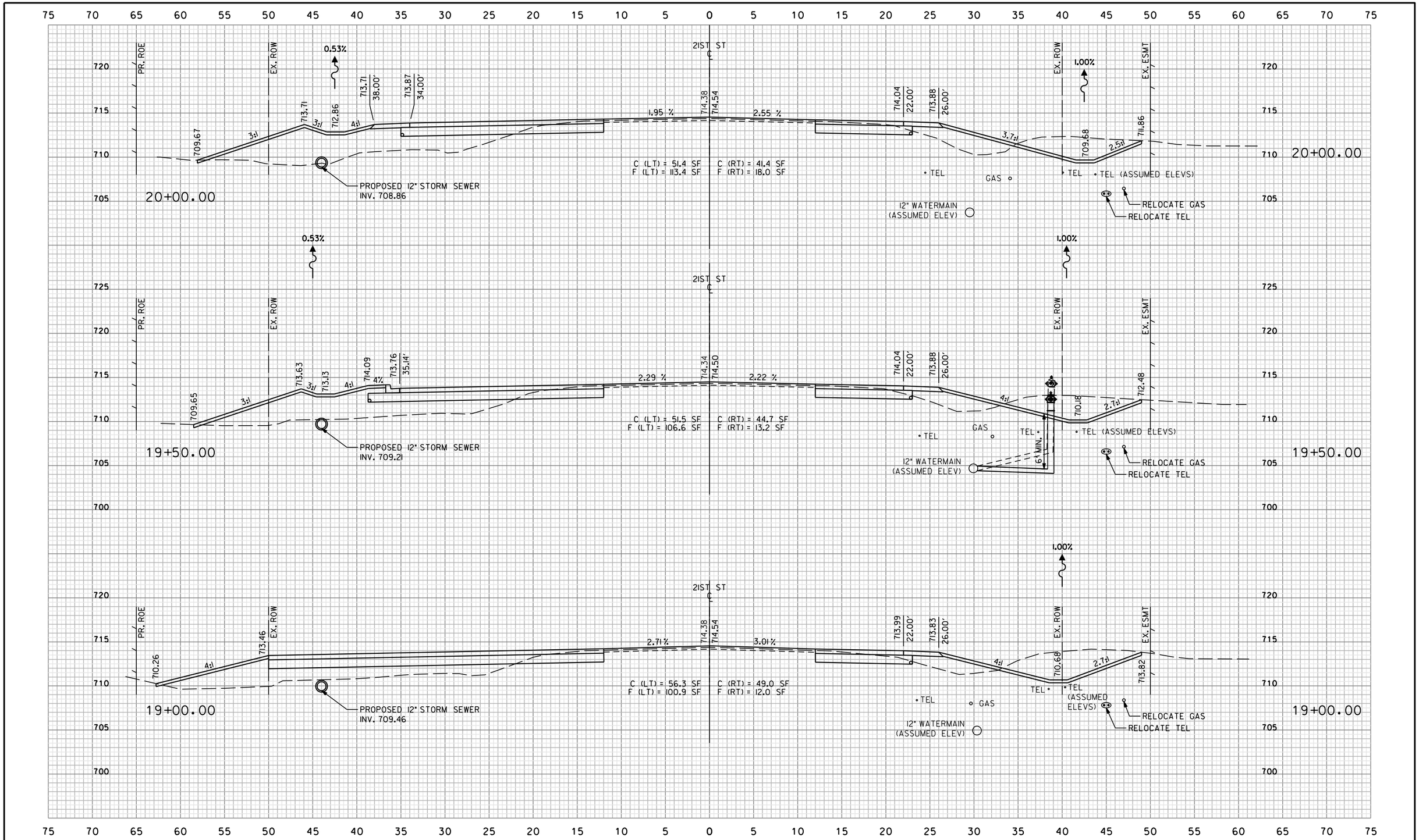

REVISIONS / REMARKS					
NO.	DESCRIPTION	DATE	BY	SURVEYOR:	___/___
				DSGNR/LIAISON:	___
				PLOTTED BY:	khdl8691 3/10/2016

21st STREET WIDENING

LakeCounty
Division of Transportation

21ST STREET

CROSS SECTION STA. 19+00.00 TO STA. 20+00.00

ROUTE	SECTION	SECTION NUMBER	SHEET	SHEETS
CH67	146	15-00999-18-RS	40	128

FILE NAME: U:\Design\Russo\15-00999-18-RS 21st Street Resurfacing (Access Improvements)\CAD\15-00999-18-RS.dgn

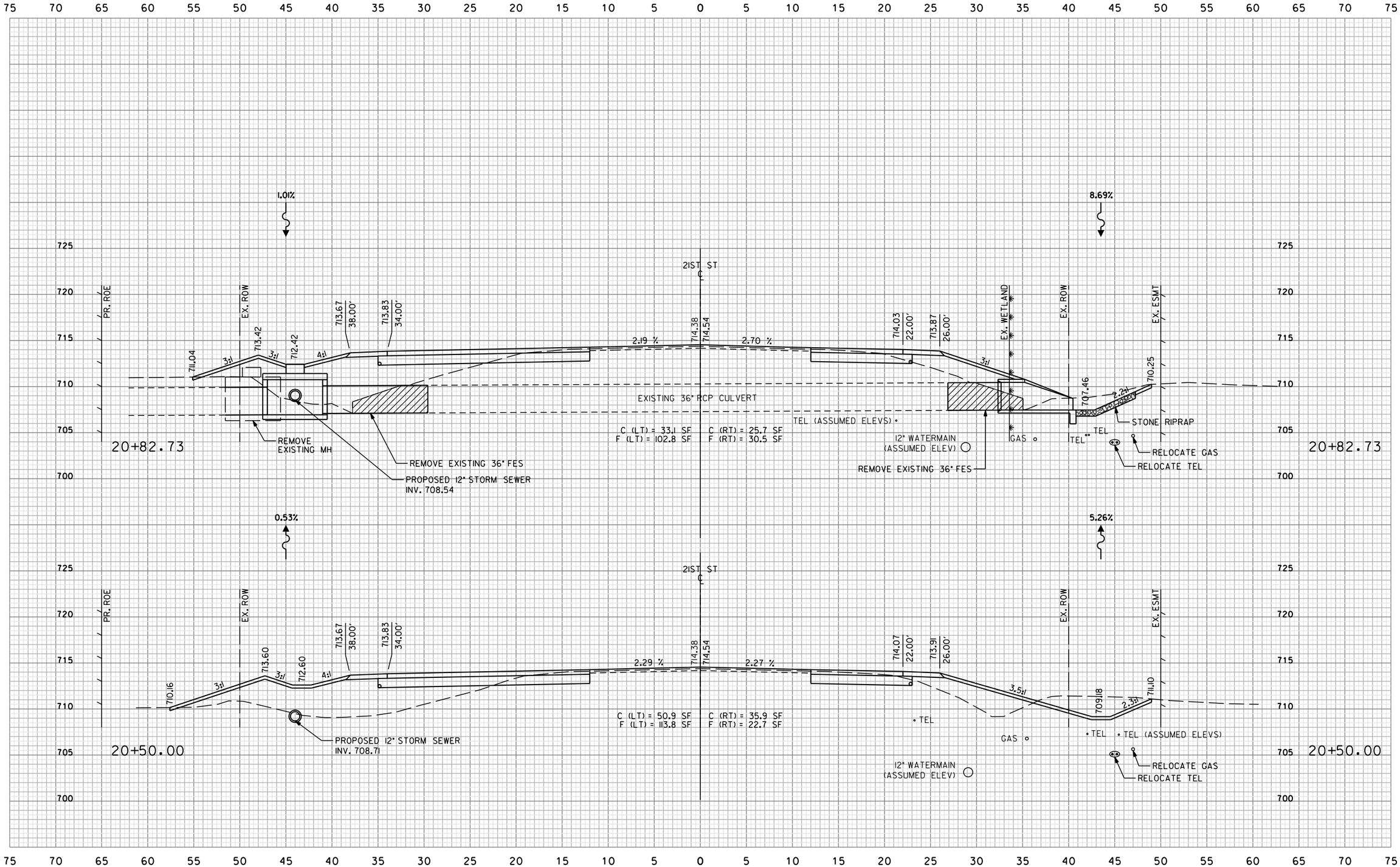

REVISIONS / REMARKS					
NO.	DESCRIPTION	DATE	BY	SURVEYOR:	___/___
		__/__/__		DSGNR/LIAISON:	___
		__/__/__		PLOTTED BY: khdl8691 3/10/2016	

21st STREET WIDENING

LakeCounty
Division of Transportation

21ST STREET

CROSS SECTION STA. 20+50.00 TO STA. 20+82.73

ROUTE	SECTION	SECTION NUMBER	SHEET	SHEETS
CH67	146	15-00999-18-RS	41	128

FILE NAME: U:\Design\Russo\15-00999-18-RS 21st Street Resurfacing (Access Improvements)\CAD\15-00999-18-RS.dgn

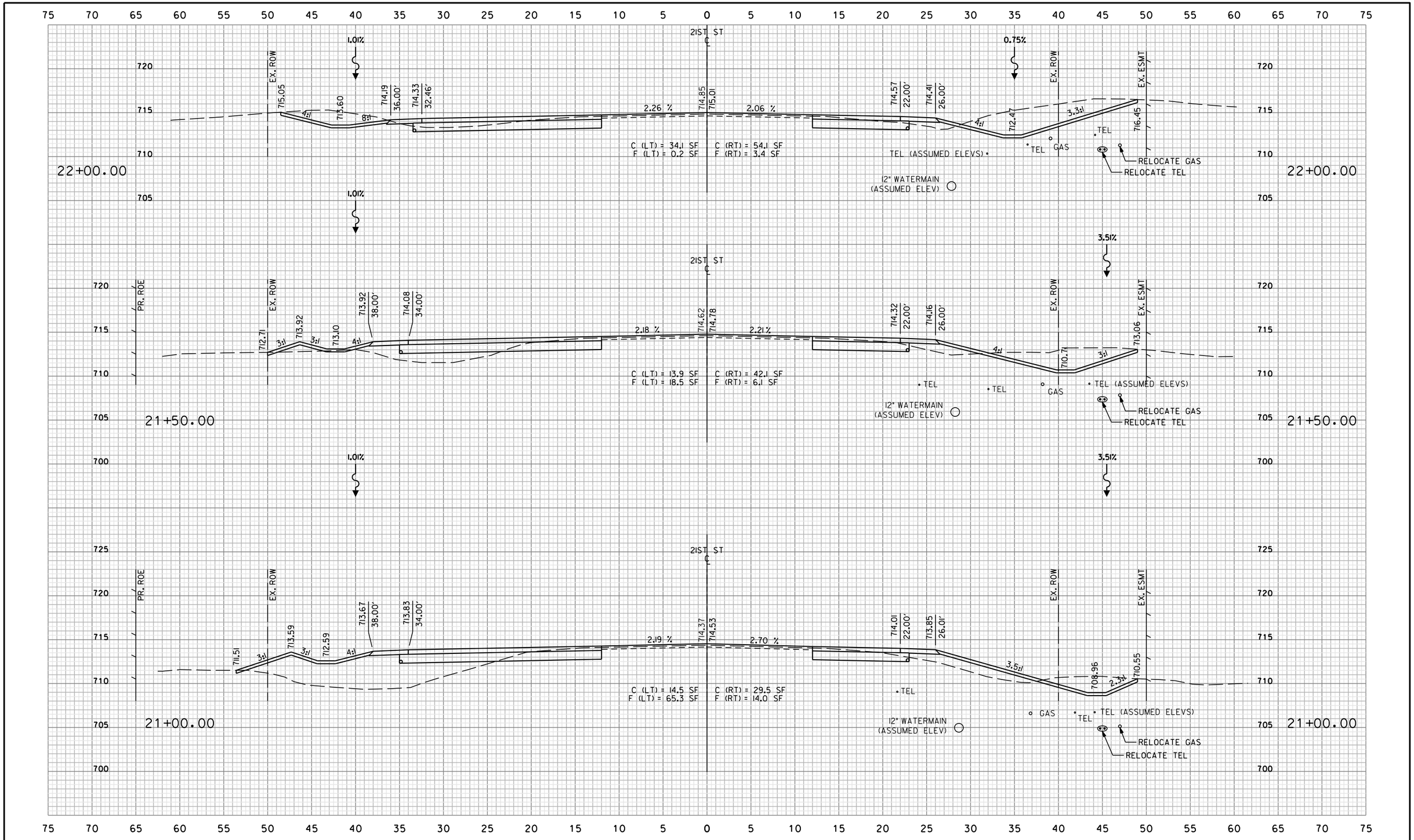

REVISIONS / REMARKS					
NO.	DESCRIPTION	DATE	BY	SURVEYOR:	__/__
		__/__/__		DSGNR/LIAISON:	
		__/__/__		PLOTTED BY: khdl8691 3/10/2016	

21st STREET WIDENING

LakeCounty
Division of Transportation

21ST STREET

CROSS SECTION STA. 21+00.00 TO STA. 22+00.00

ROUTE	SECTION	SECTION NUMBER	SHEET	SHEETS
CH67	146	15-00999-18-RS	42	128

FILE NAME: U:\Design\Russo\15-00999-18-RS 21st Street Resurfacing (Access Improvements)\CAD\15-00999-18-RS.dgn

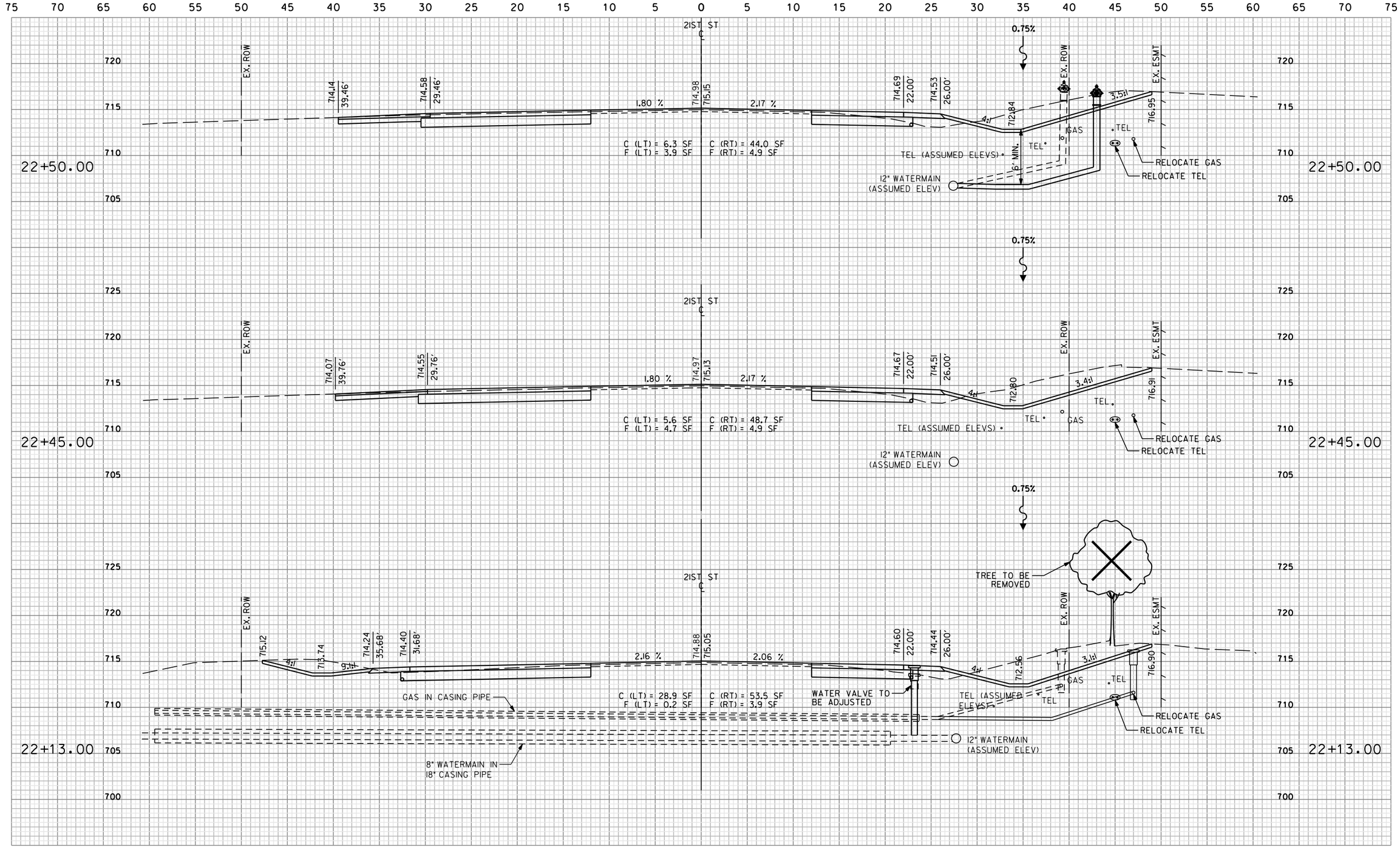

REVISIONS / REMARKS					
NO.	DESCRIPTION	DATE	BY	SURVEYOR:	___/___
		___/___/___	___	DSGNR/LIAISON:	___
		___/___/___	___	PLOTTED BY:	khdl869l 3/10/2016

21st STREET WIDENING

LakeCounty
Division of Transportation

21ST STREET

CROSS SECTION STA. 22+13.00 TO STA. 22+50.00

ROUTE	SECTION	SECTION NUMBER	SHEET	SHEETS
CH67	146	15-00999-18-RS	43	128

FILE NAME: U:\Design\Russo\15-00999-18-RS 21st Street Resurfacing (Access Improvements)\CAD\15-00999-18-RS.dgn

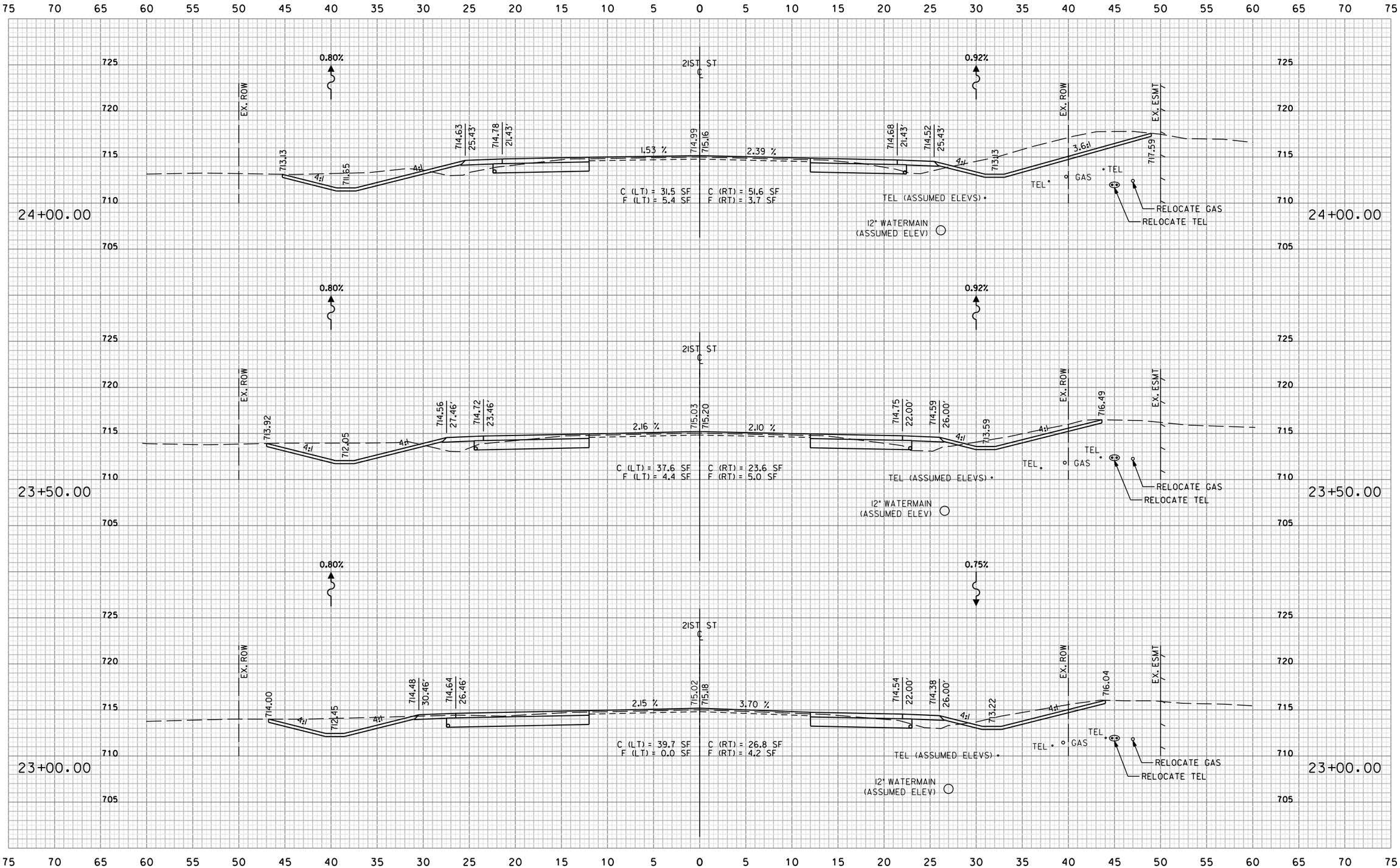

REVISIONS / REMARKS					
NO.	DESCRIPTION	DATE	BY	SURVEYOR:	___/___
		__/__/__		DSGNR/LIAISON:	___
		__/__/__		PLOTTED BY: khdl8691 3/10/2016	

21st STREET WIDENING

LakeCounty
Division of Transportation

21ST STREET

CROSS SECTION STA. 23+00.00 TO STA. 24+00.00

ROUTE	SECTION	SECTION NUMBER	SHEET	SHEETS
CH67	146	15-00999-18-RS	44	128

FILE NAME: U:\Design\Russo\15-00999-18-RS 21st Street Resurfacing (Access Improvements)\CAD\15-00999-18-RS.dgn

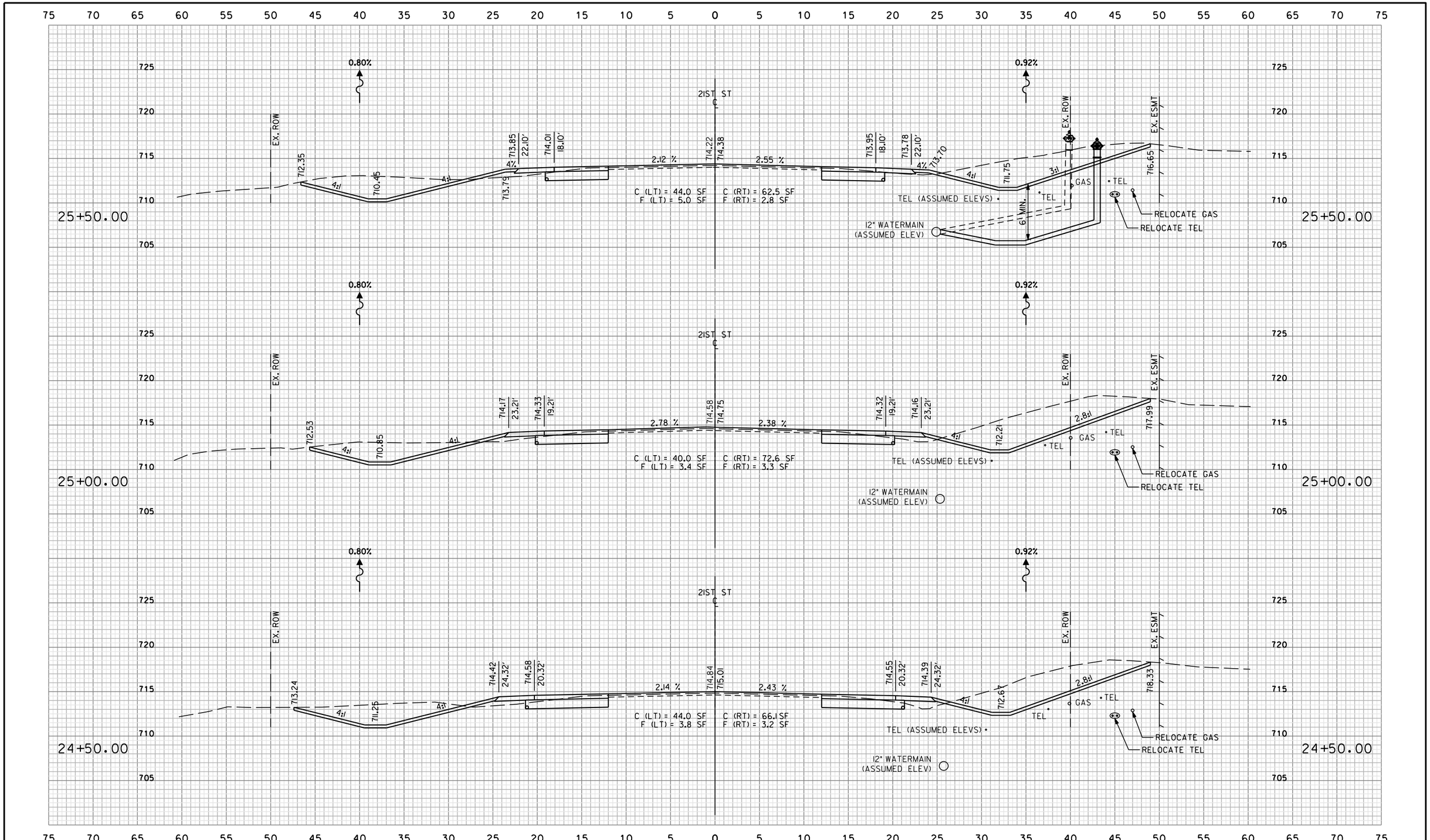

REVISIONS / REMARKS					
NO.	DESCRIPTION	DATE	BY	SURVEYOR:	___/___
		___/___/___	___	DSGNR/LIAISON:	___
		___/___/___	___	PLOTTED BY:	khdl8691 3/10/2016

21st STREET WIDENING

LakeCounty
Division of Transportation

21ST STREET
CROSS SECTION STA. 24+50.00 TO STA. 25+50.00

ROUTE	SECTION	SECTION NUMBER	SHEET	SHEETS
CH67	146	15-00999-18-RS	45	128

FILE NAME: U:\Design\Russo\15-00999-18-RS 21st Street Resurfacing (Access Improvements)\CAD\15-00999-18-RS.dgn

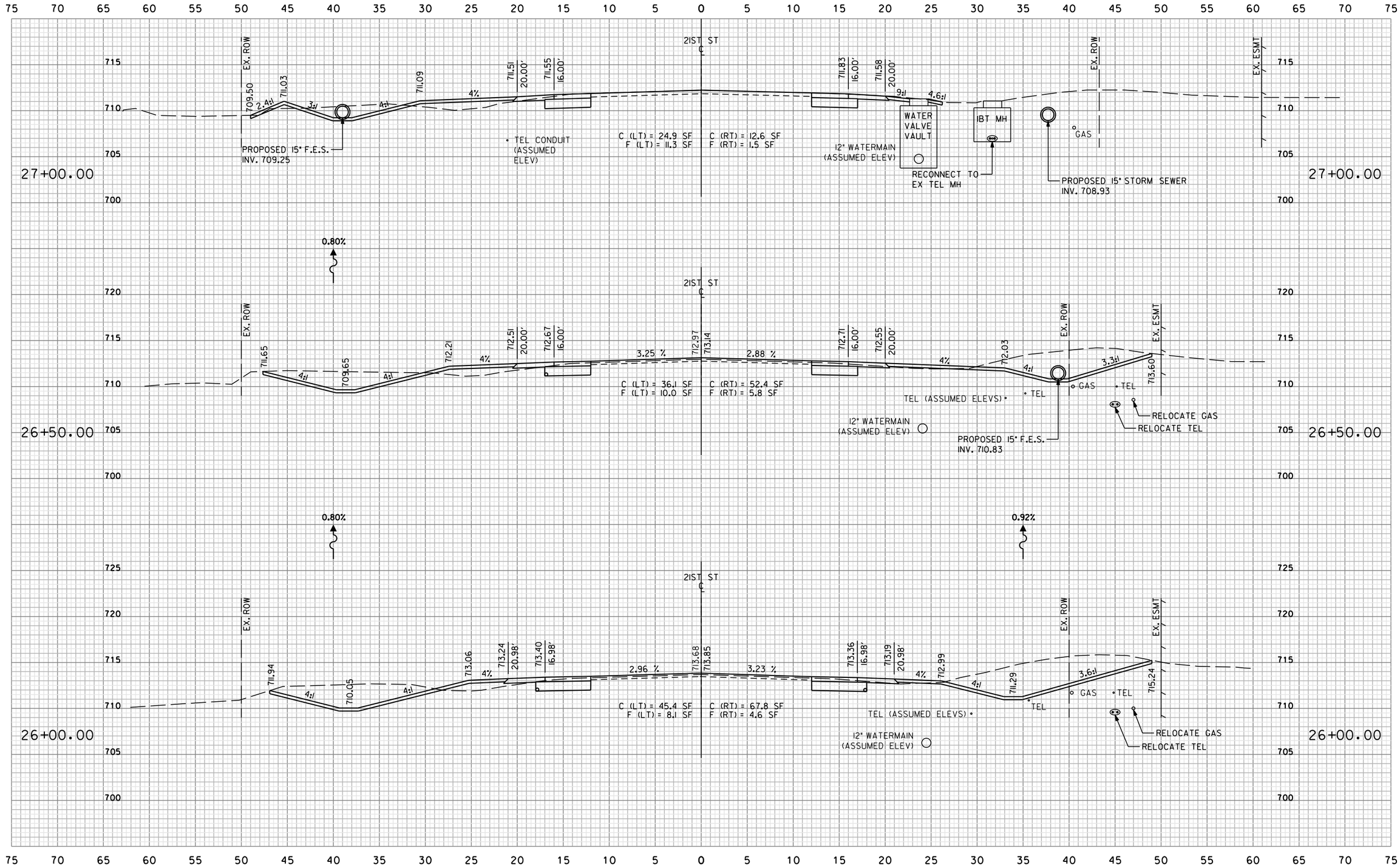

REVISIONS / REMARKS					
NO.	DESCRIPTION	DATE	BY	SURVEYOR:	___/___
		___/___/___	___	DSGNR/LIAISON:	___
		___/___/___	___	PLOTTED BY:	khd18691 3/10/2016

21st STREET WIDENING

LakeCounty
Division of Transportation

21ST STREET

CROSS SECTION STA. 26+00.00 TO STA. 27+00.00

ROUTE	SECTION	SECTION NUMBER	SHEET	SHEETS
CH67	146	15-00999-18-RS	46	128

FILE NAME: U:\Design\Russo\15-00999-18-RS 21st Street Resurfacing (Access Improvements)\CAD\15-00999-18-RS.dgn

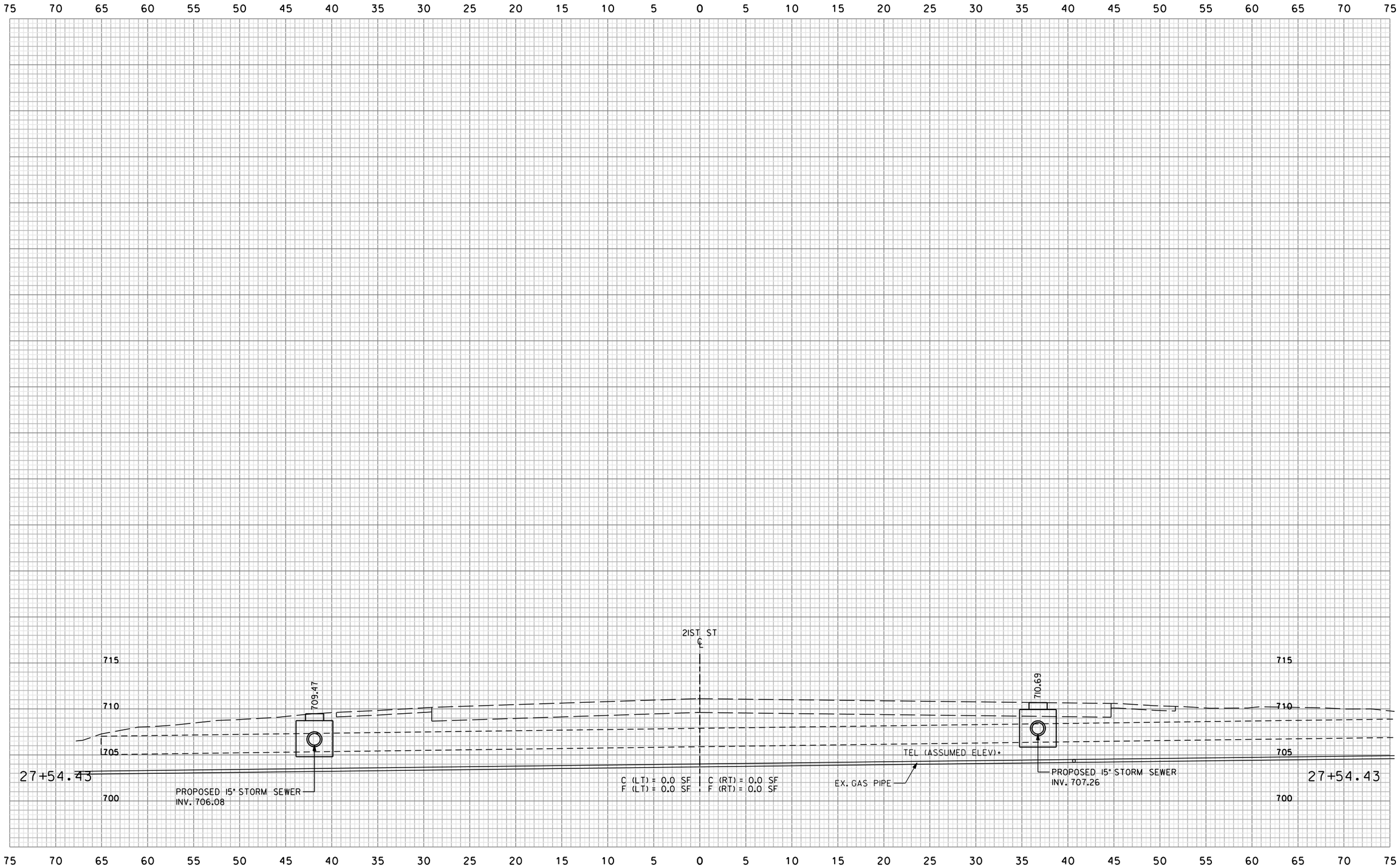

REVISIONS / REMARKS					
NO.	DESCRIPTION	DATE	BY	SURVEYOR:	___/___
		__/__/__		DSGNR/LIAISON:	___/___
		__/__/__		PLOTTED BY:	khd18691 3/10/2016

21st STREET WIDENING

LakeCounty
Division of Transportation

21ST STREET

CROSS SECTION STA. 27+54.43

ROUTE	SECTION	SECTION NUMBER	SHEET	SHEETS
CH67	146	15-00999-18-RS	47	128

FILE NAME: U:\Design\Russo\15-00999-18-RS 21st Street Resurfacing (Access Improvements)\CAD\15-00999-18-RS.dgn

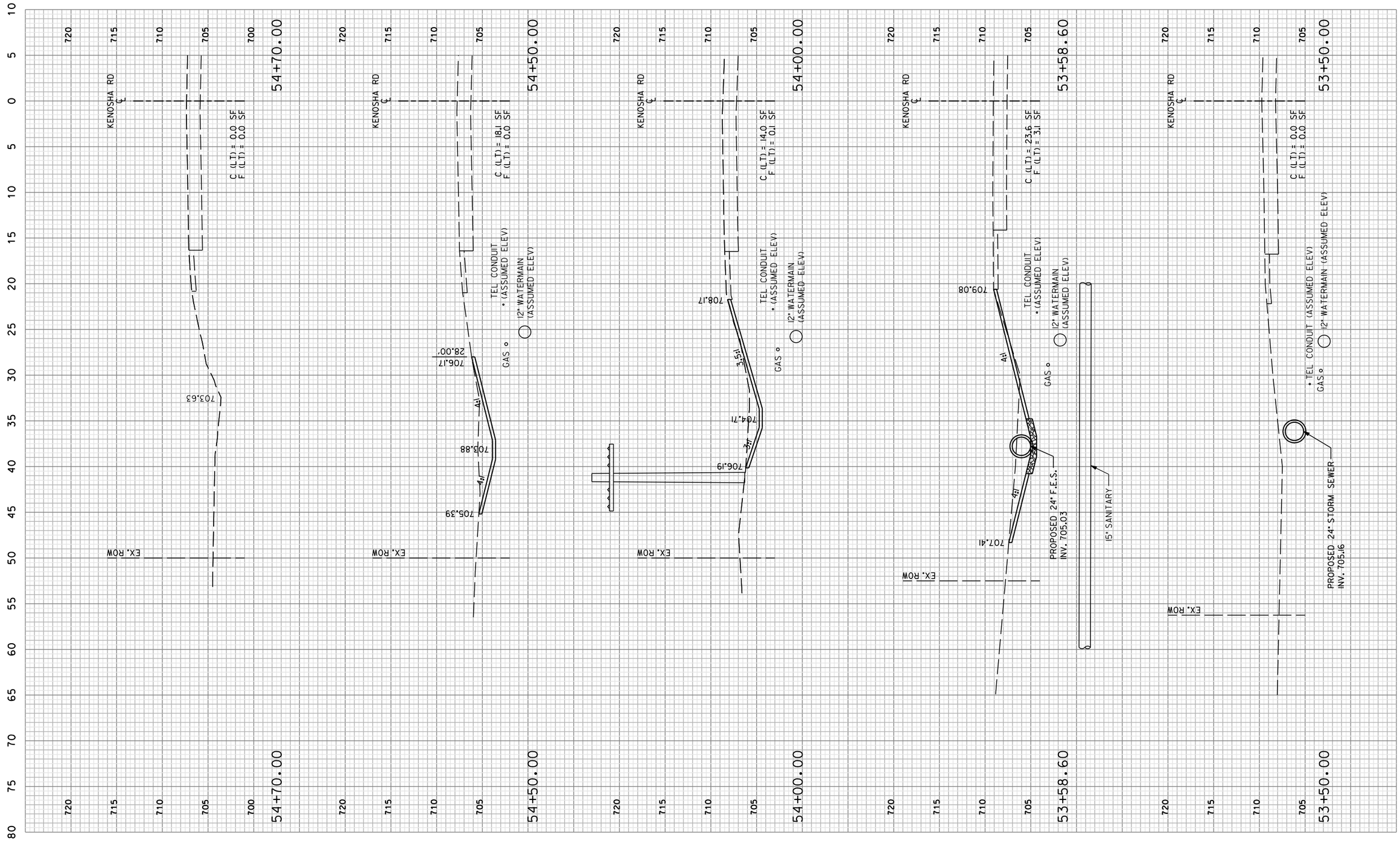

REVISIONS / REMARKS					
NO.	DESCRIPTION	DATE	BY	SURVEYOR:	___/___
		___/___/___	___	DSGNR/LIAISON:	___/___
		___/___/___	___	PLOTTED BY:	khd18691 3/10/2016

21st STREET WIDENING

LakeCounty
Division of Transportation

KENOSHA ROAD

CROSS SECTION STA. 53+50.00 TO STA. 54+70.00

ROUTE	SECTION	SECTION NUMBER	SHEET	SHEETS
CH67	146	15-00999-18-RS	48	128

FILE NAME: U:\Design\Russo\15-00999-18-RS 21st Street Resurfacing (Access Improvements)\CAD\15-00999-18-RS.dgn

KENOSHA ROAD (IL 131 TO 21ST STREET) SUMMARY OF QUANTITIES AND INDEX OF SCHEDULES

E	S	PAY CODE	DESCRIPTION	UNIT	QUANTITY	SCHEDULE #	SHEET
		20101400	NITROGEN FERTILIZER NUTRIENT (90 lbs./Acre)	LBS	98	18	54
		20101600	POTASSIUM FERTILIZER NUTRIENT (90 lbs./Acre)	LBS	98	18	54
	S	20200600	EXCAVATING AND GRADING EXISTING SHOULDER	UNIT	74	1	50
	S	21101600	TOPSOIL FURNISH AND PLACE, VARIABLE DEPTH	SQ YD	5252	18	54
		25000210	SEEDING, CLASS 2A	ACRE	1.1	18	54
		25100630	EROSION CONTROL BLANKET	SQ YD	5252	18	54
E	S	35101400	AGGREGATE BASE COURSE, TYPE B	TON	729	17	53
		40600290	BITUMINOUS MATERIALS (TACK COAT)	POUND	20106	8	53
E		40600400	MIXTURE FOR CRACKS, JOINTS, AND FLANGEWAYS	TON	5	17	53
E	S	40600525	LEVELING BINDER (HAND METHOD), N50	TON	5	17	53
		40600625	LEVELING BINDER (MACHINE METHOD), N50	TON	689	4	50
		40600990	TEMPORARY RAMP	SQ YD	187	9	51
		40603080	HOT-MIX ASPHALT BINDER COURSE IL-19.0, N50	TON	2332	5	51
		40603335	HOT-MIX ASPHALT SURFACE COURSE, MIX "D", N50	TON	2156	6	51
	S	44000159	HOT-MIX ASPHALT SURFACE REMOVAL 2 1/2"	SQ YD	16474	2	50
E		44000200	DRIVEWAY PAVEMENT REMOVAL	SQ YD	2186	17	53
E	S	44201761	CLASS D PATCHES, TYPE I, 10 INCH	SQ YD	73	17	53
E	S	44201765	CLASS D PATCHES, TYPE II, 10 INCH	SQ YD	109	17	53
E	S	44201769	CLASS D PATCHES, TYPE III, 10 INCH	SQ YD	328	17	53
E	S	44201771	CLASS D PATCHES, TYPE IV, 10 INCH	SQ YD	218	17	53
	S	44300100	AREA REFLECTIVE CRACK CONTROL TREATMENT	SQ YD	12782	22	54
	S	48101200	AGGREGATE SHOULDERS, TYPE B	TON	816	21	54
		60262700	INLETS TO BE RECONSTRUCTED	EACH	2	19	54
		70300100	SHORT TERM PAVEMENT MARKING	FOOT	9462	10	52
E		70300150	SHORT TERM PAVEMENT MARKING REMOVAL	SQ FT	673	17	53
		70300210	TEMPORARY PAVEMENT MARKING - LETTERS AND SYMBOLS	SQ FT	218	11	52
		70300220	TEMPORARY PAVEMENT MARKING - LINE 4"	FOOT	10652	11	52
		70300230	TEMPORARY PAVEMENT MARKING - LINE 5"	FOOT	7665	11	52
		70300240	TEMPORARY PAVEMENT MARKING - LINE 6"	FOOT	577	11	52
		70300260	TEMPORARY PAVEMENT MARKING - LINE 12"	FOOT	787	11	52
		70300280	TEMPORARY PAVEMENT MARKING - LINE 24"	FOOT	46	11	52
		70300520	PAVEMENT MARKING TAPE, TYPE III 4"	FOOT	2019	12	53
	S	78000100	THERMOPLASTIC PAVEMENT MARKING - LETTERS AND SYMBOLS	SQ FT	218	13	53
	S	78000300	THERMOPLASTIC PAVEMENT MARKING - LINE 5"	FOOT	197	13	53
		78001120	PAINT PAVEMENT MARKING - LINE 5"	FOOT	7468	15	52
	S	78300200	RAISED REFLECTIVE PAVEMENT MARKER REMOVAL	EACH	81	16	53
	S	LC200051	REJECTED LOAD TRANSPORTATION	LOAD	2	-	-
	S	LC400100	BUTT JOINT FOR ENTRANCE RESURFACING	FOOT	644	7	53
	S	LC780021	GROOVED THERMOPLASTIC PAVEMENT MARKING - LINE 4"	FOOT	10556	14	53
	S	LC780023	GROOVED THERMOPLASTIC PAVEMENT MARKING - LINE 6"	FOOT	577	14	53
	S	LC780025	GROOVED THERMOPLASTIC PAVEMENT MARKING - LINE 12"	FOOT	775	14	53
	S	LC780026	GROOVED THERMOPLASTIC PAVEMENT MARKING - LINE 24"	FOOT	46	14	53
	S	X4401198	HOT-MIX ASPHALT SURFACE REMOVAL, VARIABLE DEPTH	SQ YD	525	3	50
	S	X6030205	FRAME AND GRATES TO BE ADJUSTED (SPECIAL)	EACH	7	20	54
	S	X6700405	ENGINEER'S FIELD OFFICE, TYPE A (MODIFIED)	CAL MO	1	-	-
E	S	XX000856	MAILBOX REMOVAL AND RELOCATION	EACH	18	17	53
E	S	XX206400	MAILBOX POST	EACH	18	17	53
		E	ESTIMATED OR CONTINGENCY ITEM				
		S	REQUIRES SPECIAL PROVISION				

1 EXCAVATING AND GRADING EXISTING SHOULDER

FROM	TO	LEFT OR RIGHT	LENGTH (FEET)	AVERAGE WIDTH (FEET)	QUANTITY 1 UNIT = 100' (UNITS)
13+00.00	22+00.00	LT	900.00	4.0	9.0
25+31.70	52+10.00	LT	2678.30	4.0	26.8
14+10.00	21+80.00	RT	770.00	4.0	7.7
25+71.60	33+98.93	RT	827.33	4.0	8.3
35+32.00	44+11.20	RT	879.20	4.0	8.8
45+02.80	52+10.00	RT	707.2	4.0	7.1
				SUBTOTAL	67.6
PAY CODE 20200600				10% CONTINGENCY	6.8
				TOTAL	74.4

2 HOT-MIX ASPHALT SURFACE REMOVAL 2 1/2"

FROM	TO	LT/RT	LENGTH (FEET)	AVG. WIDTH (FEET)	AREA (SQ. FT.)	AREA (SQ. YDS.)
MAINLINE - LEFT						
13+00.00	18+50.00	LT	550.00	12.2	6682.5	742.5
18+50.00	22+00.00	LT	350.00	12.1	4245.5	471.7
22+00.00	25+31.70	LT	331.70	13.0	4312.1	479.1
25+31.70	30+50.00	LT	518.30	13.5	6971.1	774.6
30+50.00	36+50.00	LT	600.00	12.5	7500.0	833.3
36+50.00	42+50.00	LT	600.00	12.2	7290.0	810.0
42+50.00	48+50.00	LT	600.00	12.0	7200.0	800.0
48+50.00	52+10.00	LT	360.00	13.2	4755.6	528.4
MAINLINE - RIGHT						
13+00.00	16+72.30	RT	372.30	26.0	9679.8	1075.5
16+72.30	20+18.00	RT	345.70	19.7	6810.3	756.7
20+18.00	24+50.00	RT	432.00	14.0	6048.0	672.0
24+50.00	26+63.50	RT	213.50	14.0	2989.0	332.1
26+63.50	30+50.00	RT	386.50	20.8	8043.1	893.7
30+50.00	32+62.90	RT	212.90	33.3	7089.6	787.7
32+62.90	34+94.80	RT	231.90	39.8	9238.9	1026.5
34+94.80	35+32.00	RT	37.20	33.8	1258.8	139.9
35+32.00	36+50.00	RT	118.00	27.0	3186.0	354.0
36+50.00	38+62.40	RT	212.40	27.0	5734.8	637.2
38+62.40	41+93.50	RT	331.10	19.8	6552.5	728.1
41+93.50	42+50.00	RT	56.50	15.3	865.0	96.1
42+50.00	43+52.90	RT	102.90	23.0	2366.7	263.0
43+52.90	45+02.80	RT	149.90	29.1	4365.8	485.1
45+02.80	46+59.09	RT	156.29	21.1	3302.4	366.9
46+59.09	48+50.00	RT	190.91	12.0	2290.9	254.5
48+50.00	49+85.50	RT	135.50	12.0	1626.0	180.7
49+85.50	51+52.60	RT	167.10	18.0	3007.8	334.2
51+52.60	52+10.00	RT	57.40	24.0	1377.6	153.1
					SUBTOTAL	14976.7
PAY CODE 44000159					10% CONTINGENCY	1497.7
					TOTAL	16474.3

3 HOT-MIX ASPHALT SURFACE REMOVAL, VARIABLE DEPTH

FROM	TO	LT/RT	LENGTH (FEET)	AVG. WIDTH (FEET)	AREA (SQ. FT.)	AREA (SQ. YDS.)
SIDE ROADS						
CYPRESS DR		RT	118.0	-	1395.0	155.0
SHEPHERDS CROSS. DR		RT	96.0	-	747.5	83.1
VAN CT		LT	60.0	-	960.6	106.7
ZBTH WEST		RT	92.0	-	1196.3	132.9
					SUBTOTAL	477.7
PAY CODE X4401198					10% CONTINGENCY	47.8
					TOTAL	525.5

4 LEVELING BINDER (MACHINE METHOD), N50

FROM	TO	LEFT OR RIGHT	LENGTH (FEET)	AVERAGE WIDTH (FEET)	DEPTH (INCHES)	AREA TO BE PRIMED (SQ. YDS.)	QUANTITY (TONS)
MAINLINE - LEFT							
13+00.00	18+50.00	LT	550.00	12.2	0.75	742.5	31.2
18+50.00	22+00.00	LT	350.00	12.1	0.75	471.7	19.8
22+00.00	25+31.70	LT	331.70	13.0	1.00	479.1	26.8
25+31.70	30+50.00	LT	518.30	13.5	0.75	774.6	32.5
30+50.00	36+50.00	LT	600.00	12.5	0.75	833.3	35.0
36+50.00	42+50.00	LT	600.00	12.2	0.75	810.0	34.0
42+50.00	48+50.00	LT	600.00	12.0	0.75	800.0	33.6
48+50.00	49+40.00	LT	90.00	13.2	0.75	132.1	5.5
49+40.00	52+10.00	LT	270.00	13.2	1.00	396.3	22.2
MAINLINE - RIGHT							
13+00.00	16+72.30	RT	372.30	26.0	0.75	1075.5	45.2
16+72.30	20+18.00	RT	345.70	19.7	0.75	756.7	31.8
20+18.00	22+00.00	RT	182.00	14.0	0.75	283.1	11.9
22+00.00	25+31.70	RT	331.70	14.0	1.00	516.0	28.9
25+31.70	26+63.50	RT	131.80	14.0	0.75	205.0	8.6
26+63.50	30+50.00	RT	386.50	20.8	0.75	893.7	37.5
30+50.00	32+62.90	RT	212.90	33.3	0.75	787.7	33.1
32+62.90	34+94.80	RT	231.90	39.8	0.75	1026.5	43.1
34+94.80	35+32.00	RT	37.20	33.8	0.75	139.9	5.9
35+32.00	36+50.00	RT	118.00	27.0	0.75	354.0	14.9
36+50.00	38+62.40	RT	212.40	27.0	0.75	637.2	26.8
38+62.40	41+93.50	RT	331.10	19.8	0.75	728.1	30.6
41+93.50	42+50.00	RT	56.50	15.3	0.75	96.1	4.0
42+50.00	43+52.90	RT	102.90	23.0	0.75	263.0	11.0
43+52.90	45+02.80	RT	149.90	29.1	0.75	485.1	20.4
45+02.80	46+59.09	RT	156.29	21.1	0.75	366.9	15.4
46+59.09	48+50.00	RT	190.91	12.0	0.75	254.5	10.7
48+50.00	49+40.00	RT	90.00	12.0	0.75	120.0	5.0
49+40.00	49+85.00	RT	45.00	12.0	1.00	60.0	3.4
49+85.50	51+52.60	RT	167.10	18.0	1.00	334.2	18.7
51+52.60	52+10.00	RT	57.40	24.0	1.00	153.1	8.6
					SUBTOTAL	14976.0	656.1
PAY CODE 40600625 (110 lbs./Sq. Yd./1" Depth)					5% CONTINGENCY	748.8	32.8
					TOTAL	15724.8	688.9

REVISIONS / REMARKS					
NO.	DESCRIPTION	DATE	BY	SURVEYOR:	/
		/ /		DSGNR/LIAISON:	
		/ /		PLOTTED BY:	HDI8574 3/10/2016

KENOSHA ROAD RESURFACING

LakeCounty Division of Transportation

SCHEDULE OF QUANTITIES

KENOSHA ROAD - STA 13+00.00 TO 52+10.00

ROUTE	SECTION	SECTION NUMBER	SHEET	SHEETS
CH53	125	15-00999-18-RS	50	128

FILE NAME: U:\Design\Shrestha\15-00999-18-RS - Kenosha Rd (Green Bay to 21st St)\B-00999$Sheet_0050_Schedule-of-quantity.dgn

5 HOT-MIX ASPHALT BINDER COURSE, IL-19.0, N50

FROM	TO	LEFT OR RIGHT	LENGTH (FEET)	AVERAGE WIDTH (FEET)	DEPTH (INCHES)	AREA TO BE PRIMED (SQ. YDS.)	QUANTITY (TONS)
MAINLINE LEFT							
13+40.00	18+50.00	LT	510.00	12.0	2.25	680.0	85.7
18+50.00	21+60.00	LT	310.00	12.0	2.25	413.3	52.1
25+71.70	30+50.00	LT	478.30	12.0	2.25	637.7	80.4
30+50.00	36+50.00	LT	600.00	12.0	2.25	800.0	100.8
36+50.00	42+50.00	LT	600.00	12.0	2.25	800.0	100.8
42+50.00	48+50.00	LT	600.00	12.0	2.25	800.0	100.8
48+50.00	49+00.00	LT	50.00	12.0	2.25	66.7	8.4
SHOULDERS LEFT							
13+00.00	18+50.00	LT	550.00	4.0	4.50	244.4	61.6
18+50.00	22+00.00	LT	350.00	4.0	4.50	155.6	39.2
25+31.70	30+50.00	LT	518.30	4.0	4.50	230.4	58.0
30+50.00	36+50.00	LT	600.00	4.0	4.50	266.7	67.2
36+50.00	42+50.00	LT	600.00	4.0	4.50	266.7	67.2
42+50.00	48+50.00	LT	600.00	4.0	4.50	266.7	67.2
48+50.00	52+10.00	LT	360.00	4.0	4.50	160.0	40.3
MAINLINE RIGHT							
13+40.00	16+72.30	RT	332.30	24.0	2.25	886.1	111.7
16+72.30	20+07.00	RT	334.70	18.0	2.25	669.4	84.3
20+07.00	21+60.00	RT	153.00	12.0	2.25	204.0	25.7
25+71.70	26+77.00	RT	105.30	12.0	2.25	140.4	17.7
26+77.00	30+22.35	RT	345.35	18.2	2.25	698.4	88.0
30+22.35	30+81.00	RT	58.65	24.7	2.25	161.0	20.3
30+81.00	32+64.09	RT	183.09	30.5	2.25	620.5	78.2
32+64.09	33+98.88	RT	134.79	36.0	2.25	539.2	67.9
33+98.88	34+94.83	RT	95.95	35.4	2.25	377.4	47.6
34+94.83	35+23.27	RT	28.44	30.1	2.25	95.1	12.0
35+23.27	39+06.93	RT	383.66	24.0	2.25	1023.1	128.9
39+06.93	41+93.78	RT	286.85	18.3	2.25	583.3	73.5
41+93.78	43+53.00	RT	159.22	19.3	2.25	341.4	43.0
43+53.00	44+11.15	RT	58.15	26.0	2.25	168.0	21.2
44+11.15	45+02.80	RT	91.65	25.7	2.25	261.7	33.0
45+02.80	46+59.13	RT	156.33	19.1	2.25	331.8	41.8
46+59.13	49+00.00	RT	240.87	12.0	2.25	321.2	40.5
SHOULDERS RIGHT							
14+10.00	16+72.30	RT	262.30	4.0	4.50	116.6	29.4
16+72.30	21+80.00	RT	507.70	4.0	4.50	225.6	56.9
25+71.60	26+63.50	RT	91.90	4.0	4.50	40.8	10.3
26+63.50	30+50.00	RT	386.50	4.0	4.50	171.8	43.3
30+50.00	32+62.90	RT	212.90	4.0	4.50	94.6	23.8
32+62.90	33+98.93	RT	136.03	4.0	4.50	60.5	15.2
35+32.00	36+50.00	RT	118.00	4.0	4.50	52.4	13.2
36+50.00	38+62.40	RT	212.40	4.0	4.50	94.4	23.8
38+62.40	41+93.50	RT	331.10	4.0	4.50	147.2	37.1
41+93.50	43+52.90	RT	159.40	4.0	4.50	70.8	17.9
43+52.90	44+11.20	RT	58.3	4.0	4.50	25.9	6.5
45+02.80	46+59.09	RT	156.3	4.0	4.50	69.5	17.5
46+59.09	52+10.00	RT	550.9	4.0	4.50	244.8	61.7
					SUBTOTAL	14624.9	2221.4
PAY CODE 40603080 (112 lbs./Sq. Yd./1" Depth)					5% CONTINGENCY	731.2	111.1
					TOTAL	15356.2	2332.5

6 HOT-MIX ASPHALT SURFACE COURSE, MIX "D", N50

FROM	TO	LEFT OR RIGHT	LENGTH (FEET)	AVERAGE WIDTH (FEET)	DEPTH (INCHES)	AREA TO BE PRIMED (SQ. YDS.)	QUANTITY (TONS)
MAINLINE - LEFT							
13+00.00	18+50.00	LT	550.00	16.0	1.5	977.8	82.1
18+50.00	22+00.00	LT	350.00	16.0	1.5	622.2	52.3
22+00.00	25+31.70	LT	331.70	13.6	1.5	501.2	42.1
25+31.70	30+50.00	LT	518.30	16.0	1.5	921.4	77.4
30+50.00	36+50.00	LT	600.00	16.0	1.5	1066.7	89.6
36+50.00	42+50.00	LT	600.00	16.0	1.5	1066.7	89.6
42+50.00	48+50.00	LT	600.00	16.0	1.5	1066.7	89.6
48+50.00	52+10.00	LT	360.00	16.0	1.5	640.0	53.8
MAINLINE - RIGHT							
13+00.00	16+72.30	RT	372.30	28.0	1.5	1158.3	97.3
16+72.30	20+07.00	RT	334.70	22.0	1.5	818.2	68.7
20+07.00	24+50.00	RT	443.00	16.0	1.5	787.6	66.2
24+50.00	26+77.00	RT	227.00	16.0	1.5	403.6	33.9
26+77.00	30+22.35	RT	345.35	22.2	1.5	849.9	71.4
30+22.35	30+81.00	RT	58.65	28.7	1.5	186.8	15.7
30+81.00	32+64.09	RT	183.09	34.5	1.5	701.8	59.0
32+64.09	33+98.88	RT	134.79	40.0	1.5	599.1	50.3
33+98.88	34+94.83	RT	95.95	39.4	1.5	419.7	35.3
34+94.83	35+23.27	RT	28.44	34.1	1.5	107.8	9.1
35+23.27	39+06.93	RT	383.66	28.0	1.5	1193.6	100.3
39+06.93	41+93.78	RT	286.85	22.3	1.5	710.8	59.7
41+93.78	43+53.00	RT	159.22	23.3	1.5	412.0	34.6
43+53.00	44+11.15	RT	58.15	30.0	1.5	193.8	16.3
44+11.15	45+02.80	RT	91.65	29.7	1.5	302.5	25.4
45+02.80	46+59.13	RT	156.33	23.1	1.5	401.8	33.7
46+59.13	49+85.73	RT	326.60	16.0	1.5	580.6	48.8
49+85.73	51+17.76	RT	132.03	22.0	1.5	322.7	27.1
51+17.76	52+10.00	RT	92.24	28.0	1.5	287.0	24.1
SIDE ROADS							
CYPRESS DR		RT	-	-	1.5	1395.0	117.2
SHEPHERDS CROSS. DR		RT	-	-	1.5	747.5	62.8
VAN CT		LT	-	-	1.5	960.6	80.7
ZBTH WEST DR		RT	-	-	1.5	1196.3	100.5

ENTRANCES

NUMBER OF ENTRANCES	AREA PER ENTRANCE (SQ. YDS.)	TONS PER ENTRANCE (TONS)	DEPTH (INCHES)	AREA TO BE PRIMED (SQ. YDS.)	QUANTITY (TONS)
Field Entrance Quantities					
2	75.0	7.0	1.5	150.0	14.0
Minor Access Quantities					
28	75.0	7.0	1.5	2100.0	196.0

MAILBOX TURNOUT based on LCDOT Special Detail LC4121

NO OF TURNOUTS	AREA PER TURNOUT (SQ. YDS.)	TONS PER TURNOUT (TONS)	DEPTH (INCHES)	AREA TO BE PRIMED (SQ. YDS.)	QUANTITY (TONS)
7	30.0	4.2	2.5	210.0	29.4
			SUBTOTAL	24059.6	2053.8
PAY CODE 40603335 (112 lbs./Sq. Yd./1" Depth)			5% CONTINGENCY	1203.0	102.7
			TOTAL	25262.6	2156.5

9 TEMPORARY RAMP

STATION	TYPE	LT/RT	LENGTH (FEET)	AVG WIDTH (FEET)	AREA (SQ. FT.)	AREA (SQ. YDS.)
13+32	Major	LT	60.0	1.0	60.0	6.7
14+81	Major	LT	20.0	1.0	20.0	2.2
15+86	Major	LT	28.5	1.0	28.5	3.2
16+22	Major	LT	27.0	1.0	27.0	3.0
17+09	Major	LT	24.0	1.0	24.0	2.7
18+31	Major	LT	28.0	1.0	28.0	3.1
19+00	Major	LT	23.0	1.0	23.0	2.6
20+37	Major	LT	30.5	1.0	30.5	3.4
20+84	Major	RT	40.0	1.0	40.0	4.4
22+65	Major	RT	21.0	1.0	21.0	2.3
22+74	Major	LT	20.5	1.0	20.5	2.3
25+47	Major	LT	31.5	1.0	31.5	3.5
26+65	Major	LT	34.5	1.0	34.5	3.8
31+05	Major	LT	32.5	1.0	32.5	3.6
31+86	Minor	LT	31.0	1.0	31.0	3.4
32+63	Major	LT	33.5	1.0	33.5	3.7
35+13	Major	LT	21.0	1.0	21.0	2.3
36+38	Minor	LT	23.0	1.0	23.0	2.6
39+38	Major	LT	19.0	1.0	19.0	2.1
39+63	Major	LT	17.0	1.0	17.0	1.9
40+13	Major	RT	25.0	1.0	25.0	2.8
41+31	Major	RT	35.0	1.0	35.0	3.9
42+30	Major	LT	28.0	1.0	28.0	3.1
42+82	Minor	LT	28.8	1.0	28.8	3.2
43+65	Major	LT	26.0	1.0	26.0	2.9
44+40	Major	LT	27.5	1.0	27.5	3.1
45+71	Major	LT	27.5	1.0	27.5	3.1
				SUBTOTAL		84.8
PAY CODE 40600990				2 Applications		169.6
				10% CONTINGENCY		17.0
				TOTAL		186.6

10 SHORT TERM PAVEMENT MARKINGS

LETTERS & SYMBOLS

FROM STATION	TO STATION	LEFT OR RIGHT	LENGTH (FEET)	DESCRIPTION	QUANTITY (FEET)
14+63.00	14+95.00	RT	32.0	LEFT TURN ONLY	109
32+81.00	33+13.00	RT	32.0	LEFT TURN ONLY	109
32+81.00	33+13.00	LT	32.0	RIGHT TURN ONLY	109
35+87.00	36+19.00	RT	32.0	LEFT TURN ONLY	109
43+60.00	43+92.00	RT	32.0	RIGHT TURN ONLY	109
51+63.00	51+95.00	RT	32.0	RIGHT TURN ONLY	109
PAY CODE 70300100				TOTAL 1 APPLICATION	654.0
				TOTAL 4 APPLICATIONS	**2616.0**

4" DOUBLE YELLOW LINE, 4' DASH 40' SPACE (MULTIPLIED BY 2)

FROM STATION	TO STATION	LEFT OR RIGHT	LENGTH (FEET)	DESCRIPTION	QUANTITY (FEET)
13+00.00	13+24.00	LT	24.0	D DASH CENTER MEDIAN	4.8
13+00.00	13+24.00	RT	24.0	D DASH CENTER MEDIAN	4.8
14+05.00	15+05.00	C/L	100.0	D DASH CENTERLINE	20.0
15+05.00	19+96.00	LT	491.0	D DASH CENTER MEDIAN	98.2
15+05.00	19+96.00	RT	491.0	D DASH CENTER MEDIAN	98.2
19+96.00	26+77.00	C/L	681.0	D DASH CENTERLINE	136.2
26+77.00	32+72.00	LT	595.0	D DASH CENTER MEDIAN	119.0
26+77.00	32+72.00	RT	595.0	D DASH CENTER MEDIAN	119.0
32+72.00	33+98.00	C/L	126.0	D DASH CENTERLINE	25.2
35+15.00	36+28.00	C/L	113.0	D DASH CENTERLINE	22.6
36+28.00	41+94.00	RT	566.0	D DASH CENTER MEDIAN	113.2
36+28.00	41+94.00	LT	566.0	D DASH CENTER MEDIAN	113.2
41+94.00	44+38.00	C/L	244.0	D DASH CENTERLINE	48.8
45+00.00	52+10.00	C/L	710.0	D DASH CENTERLINE	142.0
PAY CODE 70300100				TOTAL 1 APPLICATION	1055.6
				TOTAL 4 APPLICATIONS	**4222.4**

4" SOLID WHITE LINE

FROM STATION	TO STATION	LEFT OR RIGHT	LENGTH (FEET)	DESCRIPTION	QUANTITY (FEET)
14+05.00	15+05.00	C/L	100.0	TURN LANE	100.0
32+72.00	33+98.00	RT	126.0	LEFT TURN LANE	126.0
32+72.00	33+98.00	RT	126.0	RIGT TURN LANE	126.0
35+15.00	36+28.00	RT	113.0	LEFT TURN LANE	113.0
43+53.00	44+85.00	LT	132.0	RIGHT TURN LANE	132.0
51+51.00	52+10.00	RT	59.0	RIGHT TURN LANE	59.0
PAY CODE 70300100				TOTAL 1 APPLICATION	656.0
				TOTAL 4 APPLICATIONS	**2624.0**
				COMPOSITE TOTAL	**9462.4**

11 TEMPORARY PAVEMENT MARKINGS

LETTERS & SYMBOLS - WHITE

FROM STATION	TO STATION	LEFT OR RIGHT	LENGTH (FEET)	DESCRIPTION	QUANTITY (SQ FT)
14+63.00	14+95.00	RT	32.0	LEFT TURN ONLY	36.4
32+81.00	33+13.00	RT	32.0	LEFT TURN ONLY	36.4
32+81.00	33+13.00	LT	32.0	RIGHT TURN ONLY	36.4
35+87.00	36+19.00	RT	32.0	LEFT TURN ONLY	36.4
43+60.00	43+92.00	RT	32.0	RIGHT TURN ONLY	36.4
51+63.00	51+95.00	RT	32.0	RIGHT TURN ONLY	36.4
PAY CODE 70300210				TOTAL 1 APPLICATION	218.4
				TOTAL 1 APPLICATIONS	**218.4**

4" YELLOW LINE

FROM STATION	TO STATION	LEFT OR RIGHT	LENGTH (FEET)	DESCRIPTION	QUANTITY (FEET)
13+00.00	13+24.00	LT	24.0	MEDIAN	48.0
13+00.00	13+24.00	RT	24.0	MEDIAN	48.0
14+05.00	15+05.00	C/L	100.0	DOUBLE YELLOW	200.0
15+05.00	19+96.00	LT	491.0	MEDIAN	982.0
15+05.00	19+96.00	RT	491.0	MEDIAN	982.0
19+96.00	26+77.00	C/L	681.0	DOUBLE YELLOW	1362.0
26+77.00	32+72.00	LT	595.0	MEDIAN	1190.0
26+77.00	32+72.00	RT	595.0	MEDIAN	1190.0
32+72.00	33+98.00	C/L	126.0	DOUBLE YELLOW	252.0
35+15.00	36+28.00	C/L	113.0	DOUBLE YELLOW	226.0
36+28.00	41+94.00	RT	566.0	MEDIAN	1132.0
36+28.00	41+94.00	LT	566.0	MEDIAN	1132.0
41+94.00	44+38.00	C/L	244.0	DOUBLE YELLOW	488.0
45+00.00	52+10.00	C/L	710.0	DOUBLE YELLOW	1420.0
PAY CODE 70300220				TOTAL 1 APPLICATION	10652.0
				TOTAL 1 APPLICATIONS	**10652.0**

5" SOLID WHITE LINE

FROM STATION	TO STATION	LEFT OR RIGHT	LENGTH (FEET)	DESCRIPTION	QUANTITY (FEET)
13+00.00	18+50.00	LT	550.0	EDGE LINE	550.0
18+50.00	24+50.00	LT	600.0	EDGE LINE	600.0
24+50.00	30+50.00	LT	600.0	EDGE LINE	600.0
30+50.00	36+50.00	LT	600.0	EDGE LINE	600.0
36+50.00	42+50.00	LT	600.0	EDGE LINE	600.0
42+50.00	48+50.00	LT	600.0	EDGE LINE	600.0
48+50.00	52+10.00	LT	360.0	EDGE LINE	360.0
14+20.00	18+50.00	LT	430.0	EDGE LINE	430.0
18+50.00	24+50.00	LT	600.0	EDGE LINE	600.0
24+50.00	30+50.00	LT	600.0	EDGE LINE	600.0
30+50.00	33+98.00	LT	348.0	EDGE LINE	348.0
35+23.00	42+50.00	RT	727.0	EDGE LINE	727.0
42+50.00	44+11.00	RT	161.0	EDGE LINE	161.0
45+18.00	48+50.00	RT	332.0	EDGE LINE	332.0
48+50.00	52+10.00	RT	360.0	EDGE LINE	360.0
SE Quad @ CYPRESS DR		RT	31.0	EDGE LINE @ RETURN	31.0
SE Quad @ SHEPPARD DR		RT	30.0	EDGE LINE @ RETURN	30.0
NE Quad @ SHEPPARD DR		RT	48.0	EDGE LINE @ RETURN	48.0
SE Quad @ ZBTH ENTRANC		RT	43.0	EDGE LINE @ RETURN	43.0
NE Quad @ ZBTH ENTRANC		RT	45.0	EDGE LINE @ RETURN	45.0
PAY CODE 70300230				TOTAL 1 APPLICATION	7665.0
				TOTAL 1 APPLICATIONS	**7665.0**

11 TEMPORARY PAVEMENT MARKINGS

6" SOLID WHITE LINE

FROM STATION	TO STATION	LEFT OR RIGHT	LENGTH (FEET)	DESCRIPTION	QUANTITY (SQ FT)
14+05.00	15+05.00	C/L	100.0	TURN LANE	100.0
32+72.00	33+98.00	RT	126.0	LEFT TURN LANE	126.0
32+72.00	33+98.00	RT	126.0	RIGT TURN LANE	46.6
35+15.00	36+28.00	RT	113.0	LEFT TURN LANE	113.0
43+53.00	44+85.00	LT	132.0	RIGHT TURN LANE	132.0
51+51.00	52+10.00	RT	59.0	RIGHT TURN LANE	59.4

6" 2'/6' DOTTED WHITE LINE (FEET) = LENGTH X 0.25

FROM STATION	TO STATION	LEFT OR RIGHT	LENGTH (FEET)	DESCRIPTION	QUANTITY (FEET)
30+81.00	32+72.00	RT	191.0	2'/6' DOTTED	47.8
30+81.00	32+72.00	RT	191.0	2'/6' DOTTED	47.8
PAY CODE 70300240				TOTAL 1 APPLICATION	577.0
				TOTAL 1 APPLICATIONS	**577.0**

12" SOLID YELLOW LINE

LOCATION		NUMBER	AVGERAGE	DESCRIPTION	QUANTITY (FEET)
13+00.00	13+09.50	1.0	12.2	MEDIAN DIAGONALS	12.2
15+05.00	19+96.00	21.0	9.8	MEDIAN DIAGONALS	205.2
26+77.00	32+72.00	26.0	11.3	MEDIAN DIAGONALS	294.3
36+28.00	41+94.00	26.0	10.6	MEDIAN DIAGONALS	275.1
PAY CODE 70300260				TOTAL 1 APPLICATION	786.8
				TOTAL 1 APPLICATIONS	**786.8**

24" SOLID WHITE LINE

LOCATION			LENGTH	DESCRIPTION	QUANTITY (FEET)
34+57.00	34+83.00	RT	26.0	STOP BAR - sheppards xing d	23.0
44+65.00	44+87.00	LT	22.0	STOP BAR - ZBTH entrance	23.0
PAY CODE 70300280				TOTAL 1 APPLICATION	46.0
				TOTAL 1 APPLICATIONS	**46.0**

15 PAINT PAVEMENT MARKINGS

5" SOLID WHITE LINE

FROM	TO	LEFT OR RIGHT	LENGTH (FEET)	DESCRIPTION	QUANTITY (FEET)
13+00.00	18+50.00	LT	550.0	EDGE LINE	550.0
18+50.00	24+50.00	LT	600.0	EDGE LINE	600.0
24+50.00	30+50.00	LT	600.0	EDGE LINE	600.0
30+50.00	36+50.00	LT	600.0	EDGE LINE	600.0
36+50.00	42+50.00	LT	600.0	EDGE LINE	600.0
42+50.00	48+50.00	LT	600.0	EDGE LINE	600.0
48+50.00	52+10.00	LT	360.0	EDGE LINE	360.0
14+20.00	18+50.00	LT	430.0	EDGE LINE	430.0
18+50.00	24+50.00	LT	600.0	EDGE LINE	600.0
24+50.00	30+50.00	LT	600.0	EDGE LINE	600.0
30+50.00	33+98.00	LT	348.0	EDGE LINE	348.0
35+23.00	42+50.00	RT	727.0	EDGE LINE	727.0
42+50.00	44+11.00	RT	161.0	EDGE LINE	161.0
45+18.00	48+50.00	RT	332.0	EDGE LINE	332.0
48+50.00	52+10.00	RT	360.0	EDGE LINE	360.0
PAY CODE 78001120				TOTAL	7468.0

12 PAVEMENT MARKING TAPE, TYPE III 4"

LETTERS & SYMBOLS

FROM STATION	TO STATION	LEFT OR RIGHT	LENGTH (FEET)	DESCRIPTION	QUANTITY (FEET)
14+63.00	14+95.00	RT	32.0	LEFT TURN ONLY	109.0
32+81.00	33+13.00	RT	32.0	LEFT TURN ONLY	109.0
32+81.00	33+13.00	LT	32.0	RIGHT TURN ONLY	109.0
35+87.00	36+19.00	RT	32.0	LEFT TURN ONLY	109.0
43+60.00	43+92.00	RT	32.0	RIGHT TURN ONLY	109.0
51+63.00	51+95.00	RT	32.0	RIGHT TURN ONLY	109.0
				TOTAL 1 APPLICATION	654.0

4' DASH 40' SPACE

FROM STATION	TO STATION	LEFT OR RIGHT	LENGTH (FEET)	DESCRIPTION	QUANTITY (FEET)
13+00.00	13+24.00	LT	24.0	D DASH CENTER MEDIAN	4.8
13+00.00	13+24.00	RT	24.0	D DASH CENTER MEDIAN	2.4
14+05.00	15+05.00	C/L	100.0	D DASH CENTERLINE	10.0
15+05.00	19+96.00	LT	491.0	D DASH CENTER MEDIAN	98.2
15+05.00	19+96.00	RT	491.0	D DASH CENTER MEDIAN	49.1
19+96.00	26+77.00	C/L	681.0	D DASH CENTERLINE	68.1
26+77.00	32+72.00	LT	595.0	D DASH CENTER MEDIAN	119.0
26+77.00	32+72.00	RT	595.0	D DASH CENTER MEDIAN	59.5
32+72.00	33+98.00	C/L	126.0	D DASH CENTERLINE	12.6
35+15.00	36+28.00	C/L	113.0	D DASH CENTERLINE	22.6
36+28.00	41+94.00	RT	566.0	D DASH CENTER MEDIAN	113.2
36+28.00	41+94.00	LT	566.0	D DASH CENTER MEDIAN	113.2
41+94.00	44+38.00	C/L	244.0	D DASH CENTERLINE	24.4
45+00.00	52+10.00	C/L	710.0	D DASH CENTERLINE	71.0
				TOTAL 1 APPLICATION	768.1

4" SOLID WHITE LINE

FROM STATION	TO STATION	LEFT OR RIGHT	LENGTH (FEET)	DESCRIPTION	QUANTITY (FEET)
14+05.00	15+05.00	C/L	100.0	TURN LANE	100.0
32+72.00	33+98.00	RT	126.0	LEFT TURN LANE	126.0
32+72.00	33+98.00	RT	126.0	RIGT TURN LANE	126.0
35+15.00	36+28.00	RT	113.0	LEFT TURN LANE	113.0
43+53.00	44+85.00	LT	132.0	RIGHT TURN LANE	132.0
51+51.00	52+10.00	RT	59.0	RIGHT TURN LANE	59.0
				TOTAL 1 APPLICATION	597.0
PAY CODE 70300520				COMPOSITE TOTAL	2019.1

7 BUTT JOINT FOR ENTRANCE RESURFACING

PER LCDOT SPECIAL DETAIL LC4110

NUMBER OF ENTRANCES	TYPE OF DRIVEWAY	LENGTH / DRIVEWAY	(FEET)
WITH CURB & GUTTER			
1	major	45.0	45.0
WITH AGGREGATE SHOULDER			
27	Minor	20.0	540.0
PAY CODE LC400100		SUBTOTAL	585.0
		10% CONTINGENCY	58.5
		TOTAL	643.5

8 BITUMINOUS MATERIALS (TACK COAT)

Area from Hot-Mix Asphalt Binder Course	15356.2
Area from Hot-Mix Asphalt Surface Course	25262.6
SUM OF AREAS (SQ. YDS.)	40618.8
PRIME TYPE SS-1 @ 0.45 LBS./SQ. YD.	
PAY CODE 40600290 — PRIME QUANTITY (POUND)	18278.5
10% CONTINGENCY	1827.8
TOTAL PRIME (POUND)	20106.3

13 THERMOPLASTIC PAVEMENT MARKINGS

LETTERS & SYMBOLS - WHITE (SQUARE FEET)

FROM STATION	TO STATION	LEFT OR RIGHT	LENGTH (FEET)	DESCRIPTION	QUANTITY (SQ FT)
14+63.00	14+95.00	RT	32.0	LEFT TURN ONLY	36.4
32+81.00	33+13.00	RT	32.0	LEFT TURN ONLY	36.4
32+81.00	33+13.00	LT	32.0	RIGHT TURN ONLY	36.4
35+87.00	36+19.00	RT	32.0	LEFT TURN ONLY	36.4
43+60.00	43+92.00	RT	32.0	RIGHT TURN ONLY	36.4
51+63.00	51+95.00	RT	32.0	RIGHT TURN ONLY	36.4
PAY CODE 78000100				TOTAL	218.4

5" SOLID WHITE LINE

FROM STATION	TO STATION	LEFT OR RIGHT	LENGTH (FEET)	DESCRIPTION	QUANTITY (FEET)
SE Quad @ CYPRESS DR		RT	31.0	EDGE LINE @ RETURN	31.0
SE Quad @ SHEPPARD DR		RT	30.0	EDGE LINE @ RETURN	30.0
NE Quad @ SHEPPARD DR		RT	48.0	EDGE LINE @ RETURN	48.0
SE Quad @ ZBTH ENTRANC		RT	43.0	EDGE LINE @ RETURN	43.0
NE Quad @ ZBTH ENTRANC		RT	45.0	EDGE LINE @ RETURN	45.0
PAY CODE 78000300				TOTAL	197.0

14 GROOVED THERMOPLASTIC PAVEMENT MARKINGS

4" YELLOW LINE

FROM STATION	TO STATION	LEFT OR RIGHT	LENGTH (FEET)	DESCRIPTION	QUANTITY (FEET)
13+00.00	13+24.00	LT	24.0	MEDIAN	48.0
13+00.00	13+24.00	RT	24.0	MEDIAN	48.0
14+05.00	15+05.00	C/L	100.0	DOUBLE YELLOW	200.0
15+05.00	19+96.00	LT	491.0	MEDIAN	982.0
15+05.00	19+96.00	RT	491.0	MEDIAN	982.0
19+96.00	26+77.00	C/L	681.0	DOUBLE YELLOW	1362.0
26+77.00	32+72.00	LT	595.0	MEDIAN	1190.0
26+77.00	32+72.00	RT	595.0	MEDIAN	1190.0
32+72.00	33+98.00	C/L	126.0	DOUBLE YELLOW	252.0
35+15.00	36+28.00	C/L	113.0	DOUBLE YELLOW	226.0
36+28.00	41+94.00	RT	566.0	MEDIAN	1132.0
36+28.00	41+94.00	LT	566.0	MEDIAN	1132.0
41+94.00	44+38.00	C/L	244.0	DOUBLE YELLOW	488.0
45+00.00	52+10.00	C/L	710.0	DOUBLE YELLOW	1420.0
PAY CODE LC780021				TOTAL	10556.0

6" SOLID WHITE LINE

FROM STATION	TO STATION	LEFT OR RIGHT	LENGTH (FEET)	DESCRIPTION	QUANTITY (FEET)
14+05.00	15+05.00	C/L	100.0	TURN LANE	100.0
32+72.00	33+98.00	RT	126.0	LEFT TURN LANE	126.0
32+72.00	33+98.00	RT	126.0	RIGT TURN LANE	46.6
35+15.00	36+28.00	RT	113.0	LEFT TURN LANE	113.0
43+53.00	44+85.00	LT	132.0	RIGHT TURN LANE	132.0
51+51.00	52+10.00	RT	59.0	RIGHT TURN LANE	59.4

6" 2'/6' DOTTED WHITE LINE (FEET) = LENGTH X 0.25

FROM STATION	TO STATION	LEFT OR RIGHT	LENGTH (FEET)	DESCRIPTION	QUANTITY (FEET)
30+81.00	32+72.00	RT	191.0	2'/6' DOTTED	47.8
30+81.00	32+72.00	RT	191.0	2'/6' DOTTED	47.8
PAY CODE LC780023				TOTAL	577.0

14 GROOVED THERMOPLASTIC PAVEMENT MARKINGS

12" SOLID YELLOW LINE

FROM	TO	NUMBER OF STRIPES	AVG. LENGTH	DESCRIPTION	QUANTITY (FEET)
13+00.00	13+09.50	1.0	12.2	MEDIAN DIAGONALS	12.2
15+05.00	19+96.00	21.0	9.8	MEDIAN DIAGONALS	205.2
26+77.00	32+72.00	26.0	11.3	MEDIAN DIAGONALS	294.3
36+28.00	41+94.00	26.0	10.6	MEDIAN DIAGONALS	275.1
PAY CODE LC780025				TOTAL	774.6

24" SOLID WHITE LINE

LOCATION			LENGTH	DESCRIPTION	QUANTITY (FEET)
34+57.00	34+83.00	RT	26.0	STOP BAR - sheppards xing di	23.0
44+65.00	44+87.00	LT	22.0	STOP BAR - ZBTH entrance	23.0
PAY CODE LC780026				TOTAL	46.0

16 RAISED REFLECTIVE PAVEMENT MARKER REMOVAL

FROM STATION	TO STATION	LT/RT	DESCRIPTION	LENGTH (FEET)	SPACING (FEET)	QUANTITY (EACH)
26+78.00	33+98.00	LT	REMOVAL	720.0	40.0	19
26+78.00	33+98.00	RT	LANE LINE	720.0	40.0	19
35+15.00	41+94.00	LT	LANE LINE	679.0	40.0	18
35+15.00	41+94.00	RT	LANE LINE	679.0	40.0	18
PAY CODE 78300200					SUBTOTAL	74
					10% CONTIGENCY	7
					TOTAL	81

17 ESTIMATED & CONTINGENT ITEMS

PAY CODE	NUMBER OF ENTRANCES	AREA PER ENTRANCE (SQ. YDS.)	DEPTH (INCHES)	QUANTITY (SQ. YDS.)	VOLUME (CU. YDS.)	QUANTITY (TON)
35101400	**AGGREGATE BASE COURSE, TYPE B**					
	Field Entrances					
	2	43.0	6.0	86.0	14.3	28.7
	Contingency for Private Entrance Reconstruction					
	28	75.0	6.0	2100.0	350.0	700.0
			TOTAL	2186.0		728.7
40600400	MIXTURE FOR CRACKS, JOINTS, AND FLANGE\		TON			5.0
40600535	LEVELING BINDER (HAND METHOD), N70		TON			5.0
44000200	DRIVEWAY PAVEMENT REMOVAL		SQ YD			2186.0
70300150	SHORT TERM PAVEMENT MARKING REMOVAL		SQ FT			673.0
XX000856	MAILBOX REMOVAL AND RELOCATION		EACH			18.0
XX206400	MAILBOX POST		EACH			18.0
	PAVEMENT PATCHING					AREA (SQ. YDS.)
	AREA OF MAINLINE HOT-MIX ASPHALT CONCRETE SURFACE COURSE =					14560
					PATCHING @ 5%	728
44201761	CLASS D PATCHES, TYPE I, 10 INCH				10%	72.8
44201765	CLASS D PATCHES, TYPE II, 10 INCH				15%	109.2
44201769	CLASS D PATCHES, TYPE III, 10 INCH				45%	327.6
44201771	CLASS D PATCHES, TYPE IV, 10 INCH				30%	218.4

*** SHORT TERM PAVEMENT MARKING REMOVAL should be used for Removal of Pavement Marking Tape, Type III 4" from Surface Course**

REVISIONS / REMARKS					
NO.	DESCRIPTION	DATE	BY	SURVEYOR:	/
		/ /		DSGNR/LIAISON:	
		/ /		PLOTTED BY:	HDI8574 3/10/2016

KENOSHA ROAD RESURFACING

LakeCounty Division of Transportation

SCHEDULE OF QUANTITIES

KENOSHA ROAD - STA 13+00.00 TO 52+10.00

ROUTE	SECTION	SECTION NUMBER	SHEET	SHEETS
CH53	125	15-00999-18-RS	53	128

FILE NAME: U:\Design\Shrestha\15-00999-18-RS - Kenosha Rd (Green Bay to 21st St)\B-00999$Sheet_0053_Schedule-of-quantity.dgn

18 LANDSCAPING ITEMS

FROM STATION	TO STATION	LT/RT	LENGTH (FEET)	WIDTH (FEET)	AREA (SQ FT)	AREA (SQ YDS)
MAINLINE - LEFT						
13+53.00	14+75.00	LT	122.0	6.0	732.0	81.3
14+88.00	15+76.00	LT	88.0	6.0	528.0	58.7
16+30.00	16+99.00	LT	69.0	6.0	414.0	46.0
17+16.00	18+22.50	LT	106.5	6.0	639.0	71.0
18+37.50	18+88.50	LT	51.0	6.0	306.0	34.0
19+03.00	20+25.50	LT	122.5	6.0	735.0	81.7
20+44.50	20+80.50	LT	36.0	6.0	216.0	24.0
20+97.30	22+68.00	LT	170.7	6.0	1024.2	113.8
25+59.00	26+55.00	LT	96.0	6.0	576.0	64.0
26+71.50	30+92.00	LT	420.5	6.0	2523.0	280.3
31+13.00	31+76.50	LT	63.5	6.0	381.0	42.3
31+93.40	32+51.00	LT	57.6	6.0	345.6	38.4
32+74.50	34+36.00	LT	161.5	6.0	969.0	107.7
34+72.30	35+05.70	LT	33.4	6.0	200.4	22.3
35+20.50	36+30.00	LT	109.5	6.0	657.0	73.0
36+47.50	39+33.70	LT	286.2	6.0	1717.2	190.8
39+68.80	42+22.90	LT	254.1	6.0	1524.6	169.4
42+42.00	42+71.50	LT	29.5	6.0	177.0	19.7
42+90.00	43+56.80	LT	66.8	6.0	400.8	44.5
43+75.50	44+30.00	LT	54.5	6.0	327.0	36.3
44+47.00	45+58.00	LT	111.0	6.0	666.0	74.0
45+82.50	52+10.00	LT	627.5	6.0	3765.0	418.3
MAINLINE - RIGHT						
14+03.00	16+73.00	RT	270.0	6.0	1620.0	180.0
16+73.00	20+74.50	RT	401.5	6.0	2409.0	267.7
20+94.00	22+57.75	RT	163.8	6.0	982.5	109.2
22+72.50	26+00.00	RT	327.5	6.0	1965.0	218.3
26+00.00	32+64.00	RT	664.0	6.0	3984.0	442.7
32+64.00	34+15.30	RT	151.3	6.0	907.8	100.9
35+17.40	40+07.00	RT	489.6	6.0	2937.6	326.4
40+19.30	41+21.00	RT	101.7	6.0	610.2	67.8
41+41.80	44+11.00	RT	269.2	6.0	1615.2	179.5
45+12.00	52+10.00	RT	698.0	6.0	4188.0	465.3

DRIVEWAYS

DRIVEWAYS	NUMBER OF ENTRANCES	AREA PER ENTRANCE (SQ FT)	AREA PER ENTRANCE (SQ. YDS.)	QUANTITY (SQ FT)	QUANTITY (SQ. YDS.)
	Minor Access Quantities based on LCDOT Special Detail LC4110				
	28	90.0	10.0	2520.0	280.0
	Major Access Quantities based on LCDOT Special Detail LC4111				
	3	135.0	15.0	405.0	45.0
			SUBTOTAL	42968.1	4774.2
			10% CONTINGENCY	4296.8	477.4
			TOTALS	47264.9	5251.7

SUMMARY

PAY CODE	DESCRIPTION	UNIT	QUANTITY
21101600	**TOPSOIL FURNISH AND PLACE, VARIABLE DEPTH**	SQ YD	**5251.7**
25000210	**SEEDING, CLASS 2A**	ACRE	**1.1**
25100630	**EROSION CONTROL BLANKET**	SQ YD	**5251.7**
20101400	**NITROGEN FERTILIZER NUTRIENT (90 lbs./Acre)**	LBS	**97.7**
20101600	**POTASSIUM FERTILIZER NUTRIENT (90 lbs./Acre)**	LBS	**97.7**

22 AREA REFLECTIVE CRACK CONTROL TREATMENT

FROM	TO	LEFT OR RIGHT	LENGTH (FEET)	AVERAGE WIDTH (FEET)	AREA TO BE PRIMED (SQ. YDS.)
MAINLINE LEFT					
13+40.00	18+50.00	LT	510.00	12.0	680.0
18+50.00	21+60.00	LT	310.00	12.0	413.3
25+71.70	30+50.00	LT	478.30	12.0	637.7
30+50.00	36+50.00	LT	600.00	12.0	800.0
36+50.00	42+50.00	LT	600.00	12.0	800.0
42+50.00	48+50.00	LT	600.00	12.0	800.0
48+50.00	49+00.00	LT	50.00	12.0	66.7
MAINLINE RIGHT					
13+40.00	16+72.30	RT	332.30	24.0	886.1
16+72.30	20+07.00	RT	334.70	18.0	669.4
20+07.00	21+60.00	RT	153.00	12.0	204.0
25+71.70	26+77.00	RT	105.30	12.0	140.4
26+77.00	30+22.35	RT	345.35	18.2	698.4
30+22.35	30+81.00	RT	58.65	24.7	161.0
30+81.00	32+64.09	RT	183.09	30.5	620.5
32+64.09	33+98.88	RT	134.79	36.0	539.2
33+98.88	34+94.83	RT	95.95	35.4	377.4
34+94.83	35+23.27	RT	28.44	30.1	95.1
35+23.27	39+06.93	RT	383.66	24.0	1023.1
39+06.93	41+93.78	RT	286.85	18.3	583.3
41+93.78	43+53.00	RT	159.22	19.3	341.4
43+53.00	44+11.15	RT	58.15	26.0	168.0
44+11.15	45+02.80	RT	91.65	25.7	261.7
45+02.80	46+59.13	RT	156.33	19.1	331.8
46+59.13	49+00.00	RT	240.87	12.0	321.2
PAY CODE 44300100				SUBTOTAL	11619.6
				10% CONTINGENCY	1162.0
				TOTAL	**12781.5**

21 AGGREGATE SHOULDERS, TYPE B

STATION	STATION	LT/RT	LENGTH (FEET)	WIDTH (FEET)	DEPTH (INCHES)	AREA (SQ. YDS.)	VOLUME (CU. YDS.)	QUANTITY (TONS)
MAINLINE - LEFT								
13+53.60	14+52.00	LT	98.40	2.0	6.0	21.9	3.6	7.3
14+92.00	15+64.00	LT	72.00	2.0	6.0	16.0	2.7	5.3
16+50.00	16+98.00	LT	48.00	2.0	6.0	10.7	1.8	3.6
17+39.00	18+20.00	LT	81.00	2.0	6.0	18.0	3.0	6.0
18+40.00	18+77.50	LT	37.50	2.0	6.0	8.3	1.4	2.8
19+14.00	20+00.00	LT	86.00	2.0	6.0	19.1	3.2	6.4
20+47.00	22+00.00	LT	153.00	2.0	6.0	34.0	5.7	11.3
25+62.00	26+52.00	LT	90.00	2.0	6.0	20.0	3.3	6.7
26+76.00	30+90.50	LT	414.50	2.0	6.0	92.1	15.4	30.7
31+17.00	31+74.50	LT	57.50	2.0	6.0	12.8	2.1	4.3
31+97.00	32+49.00	LT	52.00	2.0	6.0	11.6	1.9	3.9
32+79.50	34+30.00	LT	150.50	2.0	6.0	33.4	5.6	11.1
34+78.00	36+27.00	LT	149.00	2.0	6.0	33.1	5.5	11.0
36+48.50	39+31.00	LT	282.50	2.0	6.0	62.8	10.5	20.9
39+73.00	42+20.50	LT	247.50	2.0	6.0	55.0	9.2	18.3
42+42.50	42+68.00	LT	25.50	2.0	6.0	5.7	0.9	1.9
42+93.00	43+53.00	LT	60.00	2.0	6.0	13.3	2.2	4.4
43+76.00	44+27.70	LT	51.70	2.0	6.0	11.5	1.9	3.8
44+49.60	52+10.00	LT	760.40	4.0	6.0	338.0	56.3	112.7
MAINLINE - RIGHT								
14+10.00	16+73.00	RT	263.0	4.0	6.0	116.9	19.5	39.0
16+73.00	20+70.80	RT	397.8	4.0	6.0	176.8	29.5	58.9
20+97.00	22+56.70	RT	159.7	2.0	6.0	35.5	5.9	11.8
22+73.50	26+00.00	RT	326.5	2.0	6.0	72.6	12.1	24.2
26+00.00	32+64.00	RT	664.0	4.0	6.0	295.1	49.2	98.4
32+64.00	34+06.70	RT	142.7	4.0	6.0	63.4	10.6	21.1
35+19.00	39+07.00	RT	388.0	4.0	6.0	172.4	28.7	57.5
39+07.00	41+93.70	RT	286.7	3.0	6.0	95.6	15.9	31.9
41+93.70	44+11.00	RT	217.3	4.0	6.0	96.6	16.1	32.2
45+19.00	49+85.70	RT	466.7	4.0	6.0	207.4	34.6	69.1
49+85.70	52+10.00	RT	224.3	3.0	6.0	74.8	12.5	24.9
		RT						
PAY CODE 48101200 (2 Tons per Cubic Yard)					SUBTOTAL	240.1	40.0	741.4
					10% CONTINGENCY		4.0	74.1
					TOTAL		**44.0**	**815.6**

19 INLETS TO BE RECONSTRUCTED

FROM STATION	OFFSET	LT/RT	DESCRIPTION	INLET (EACH)
17+93.60	28.0	LT	1258 INLET TO BE RECONSTRUCT WITH 2240 STANDARD	1
21+66.80	28.5	RT	1258 INLET TO BE RECONSTRUCT WITH 2240 STANDARD	1
			PAY CODE 60262700 TOTAL	**2**

20 FRAME & GRATES TO BE ADJUSTED (SPECIAL)

STATION	OFFSET	LT/RT	DESCRIPTION	EACH
18+22.00	25.3	RT	FRAMES & GRATES TO BE ADJUSTED - STORM	1
19+48.30	21.8	RT	FRAMES & GRATES TO BE ADJUSTED - STORM	1
38+40.00	30.3	RT	FRAMES & GRATES TO BE ADJUSTED - STORM	1
42+82.80	15.8	RT	FRAMES & GRATES TO BE ADJUSTED - STORM	1
44+33.30	32.2	RT	FRAMES & GRATES TO BE ADJUSTED - STORM	1
44+42.50	27.9	RT	FRAMES & GRATES TO BE ADJUSTED - STORM	1
45+36.20	17.2	RT	FRAMES & GRATES TO BE ADJUSTED - STORM	1
			PAY CODE X6030205 TOTAL	**7**

SCALE: 1" = 10' HORIZ.
1" = 2' VERT.

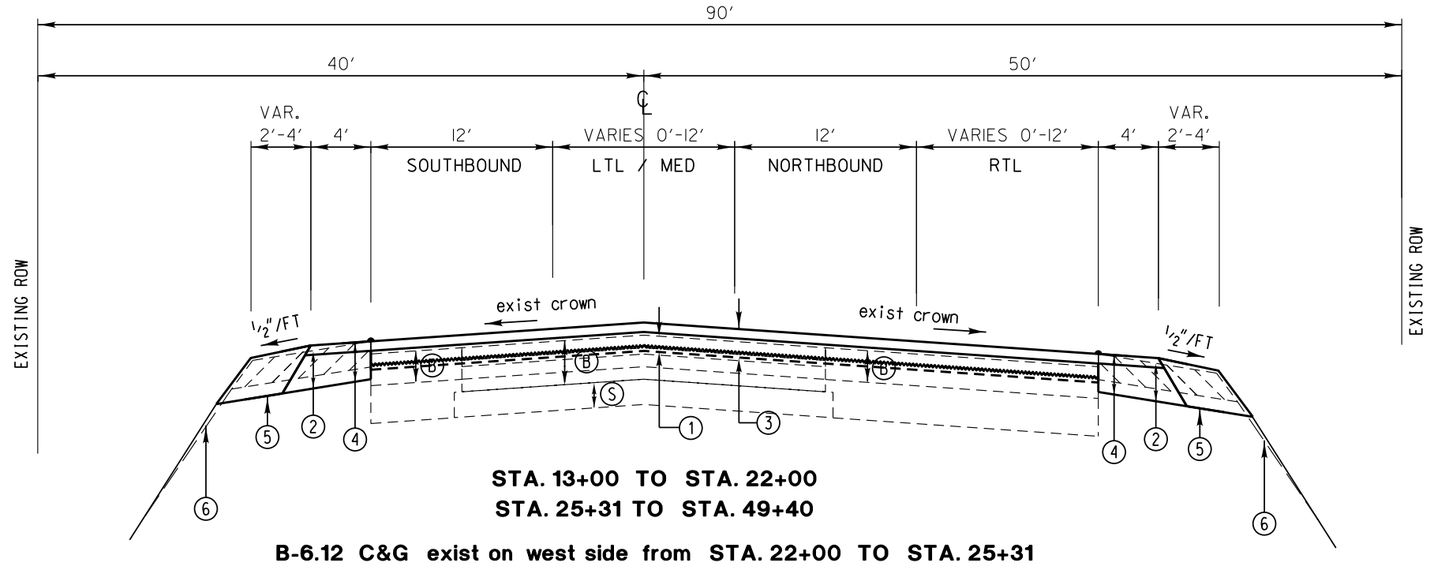

STA. 13+00 TO STA. 22+00
STA. 25+31 TO STA. 49+40

B-6.12 C&G exist on west side from STA. 22+00 TO STA. 25+31

EXIST. PAVEMENT PER RECORDS:
- 1986 - 3" Bit. Binder and Surface Course
- 1986 - 1" Leveling Binder
- 1975 - 2" Bit. Surface Plant Mix
- 1965 - 2" B-5
- 1965 - 4" Sub-Base Granular, Type B

(B) BITUMINOUS
(S) SUB-BASE GRANULAR

PROPOSED TYPICAL SECTION

PROPOSED PAVEMENT:
1.) 2½" SURFACE REMOVAL
2.) EXCAVATING & GRADING EX. SHOULDERS
3.) 1½" HOT-MIX ASPHALT SURFACE COURSE, MIX "D", N50
2¼" HOT-MIX ASPHALT BINDER COURSE, IL-19.0, N50
AREA REFLECTIVE CRACK CONTROL TREATMENT
¾" LEVELING BINDER (MACHINE METHOD), N50
4.) 1½" HOT-MIX ASPHALT SURFACE COURSE, MIX "D", N50
4½" HOT-MIX ASPHALT BINDER COURSE, IL-19.0, N50
5.) AGGREGATE SHOULDERS, TYPE B
6.) FURNISHING & PLACING TOPSOIL

SCALE: 1" = 10' HORIZ.
1" = 2' VERT.

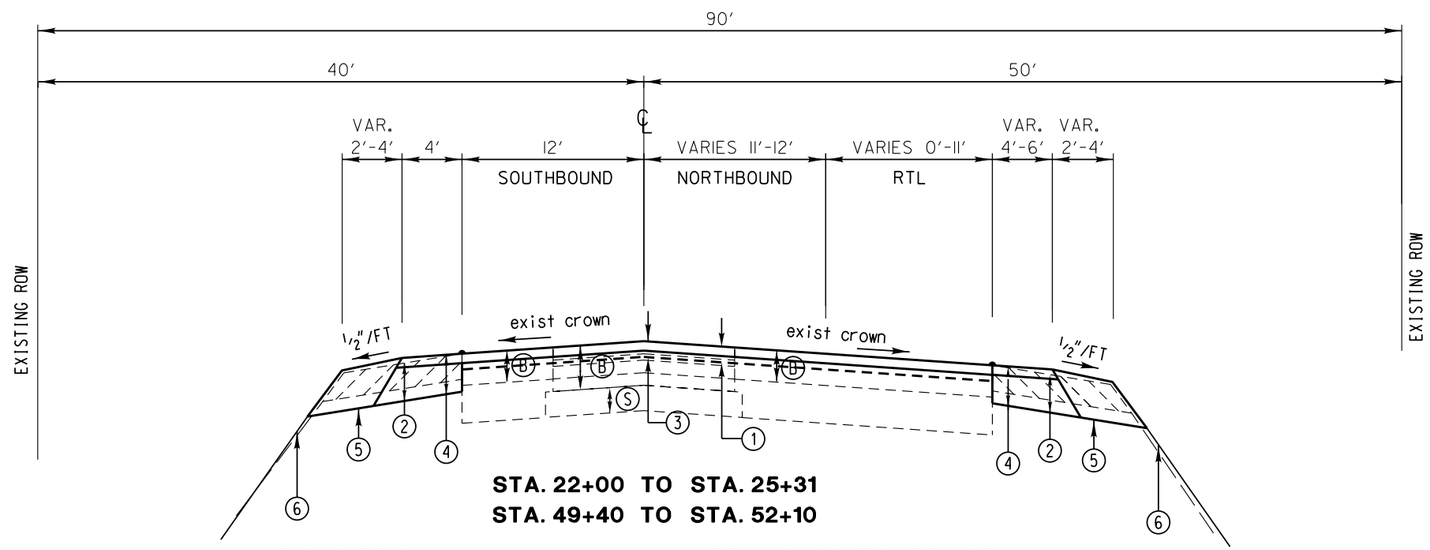

STA. 22+00 TO STA. 25+31
STA. 49+40 TO STA. 52+10

B-6.12 C&G exist on west side from STA. 22+00 TO STA. 25+31

EXIST. PAVEMENT PER RECORDS:
- 1986 - 3" Bit. Binder and Surface Course
- 1986 - 1" Leveling Binder
- 1975 - 2" Bit. Surface Plant Mix
- 1965 - 2" B-5
- 1965 - 4" Sub-Base Granular, Type B

(B) BITUMINOUS
(S) SUB-BASE GRANULAR

PROPOSED TYPICAL SECTION

PROPOSED PAVEMENT:
1.) 2½" SURFACE REMOVAL
2.) EXCAVATING & GRADING EX. SHOULDERS
3.) 1½" HOT-MIX ASPHALT SURFACE COURSE, MIX "D", N50
1" LEVELING BINDER (MACHINE METHOD), N50
4.) 1½" HOT-MIX ASPHALT SURFACE COURSE, MIX "D", N50
4½" HOT-MIX ASPHALT BINDER COURSE, IL-19.0, N50
5.) AGGREGATE SHOULDERS, TYPE B
6.) FURNISHING & PLACING TOPSOIL

REVISIONS / REMARKS	DATE	BY		
	/ /		SURVEYOR:	/
	/ /		DSGNR/LIAISON:	
	/ /		PLOTTED BY:	hdsxs 3/14/2016

6" VERT 0 — SCALES HORIZ. 0 5 10

KENOSHA ROAD RESURFACING

LakeCounty Division of Transportation

TYPICAL CROSS SECTIONS
Kenosha Road - SEC 125

ROUTE	SECTION	SECTION NUMBER	SHEET	SHEETS
CH53	125	154-00999-18-RS	55	128

	DATE	BY	SURVEYOR:	/
	/ /		DSGNR/LIAISON:	
	/ /		PLOTTED BY:	hdsxs 3/3/2016

SCALE
0 100 200

KENOSHA ROAD RESURFACING

LakeCounty
Division of Transportation

TRAFFIC CONTROL PLAN
KENOSHA ROAD - SECTION 125

ROUTE	SECTION	SECTION NUMBER	SHEET	SHEETS
CH53	125	15-00999-18-RS	56	128

	DATE	BY	SURVEYOR:	/
	/ /		DSGNR/LIAISON:	
	/ /		PLOTTED BY:	hdsxs 3/3/2016

SCALE
0 100 200

KENOSHA ROAD RESURFACING

LakeCounty Division of Transportation

TRAFFIC CONTROL PLAN

KENOSHA ROAD - SECTION 125

ROUTE	SECTION	SECTION NUMBER	SHEET	SHEETS
CH53	125	15-00999-18-RS	57	128

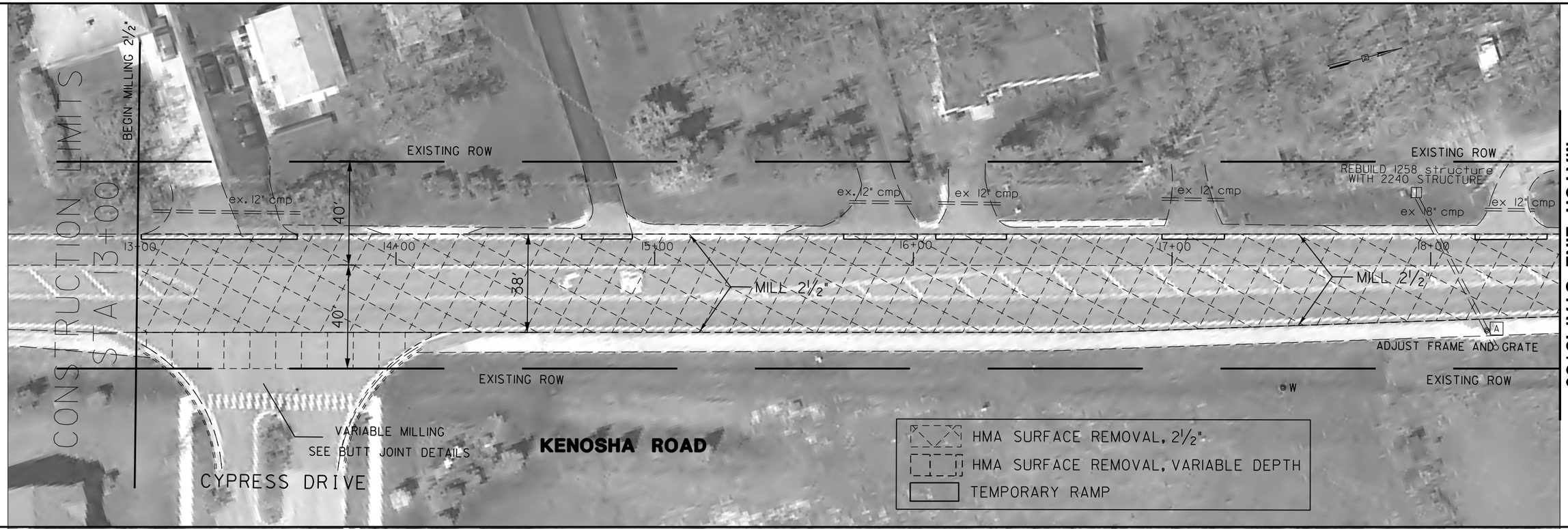

REVISIONS / REMARKS						
NO.	DESCRIPTION	DATE	BY	SURVEYOR:	/	
		/ /		DSGNR/LIAISON:		
		/ /		PLOTTED BY:	hdsxs 3/10/2016	

SCALES HORIZ. 0 20 40

KENOSHA ROAD RESURFACING

LakeCounty Division of Transportation

REMOVAL/REPAIR SHEET

STA. 13+00.00 TO 24+50.00

ROUTE	SECTION	SECTION NUMBER	SHEET	SHEETS
CH53	125	15-00999-20-RS	58	128

FILE NAME: U:\Design\Shrestha\15-00999-18-RS - Kenosha Rd (Green Bay to 21st St)\B-00999$Sheet_0058_Removal_Sheet.dgn

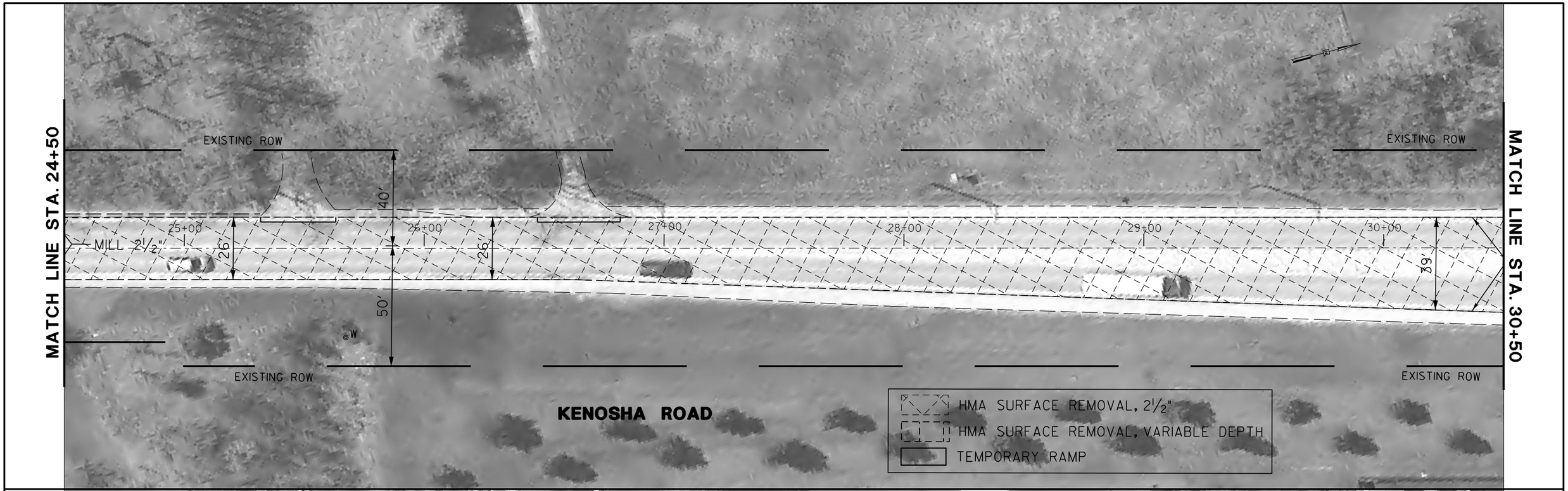

REVISIONS / REMARKS					
NO.	DESCRIPTION	DATE	BY	SURVEYOR:	/
		/ /		DSGNR/LIAISON:	
		/ /		PLOTTED BY:	hdsxs 3/10/2016

SCALES HORIZ. 0 20 40

KENOSHA ROAD RESURFACING

LakeCounty Division of Transportation

REMOVAL/REPAIR SHEET

STA. 24+50.00 TO 36+50.00

ROUTE	SECTION	SECTION NUMBER	SHEET	SHEETS
CH53	125	15-00999-20-RS	59	128

FILE NAME: U:\Design\Shrestha\15-00999-18-RS - Kenosha Rd (Green Bay to 21st St)\B-00999$Sheet_0059_Removal_Sheet.dgn

REVISIONS / REMARKS					
NO.	DESCRIPTION	DATE	BY	SURVEYOR:	/
		/ /		DSGNR/LIAISON:	
		/ /		PLOTTED BY:	hdsxs 3/10/2016

SCALES HORIZ. 0 20 40

KENOSHA ROAD RESURFACING

LakeCounty Division of Transportation

REMOVAL/REPAIR SHEET

STA. 36+50.00 TO 48+50.00

ROUTE	SECTION	SECTION NUMBER	SHEET	SHEETS
CH53	125	15-00999-20-RS	60	128

FILE NAME: U:\Design\Shrestha\15-00999-18-RS - Kenosha Rd (Green Bay to 21st St)\B-00999$Sheet_0060_Removal_Sheet.dgn

REVISIONS / REMARKS					
NO.	DESCRIPTION	DATE	BY	SURVEYOR:	/
		/ /		DSGNR/LIAISON:	
		/ /		PLOTTED BY:	hdsxs 3/10/2016

SCALES HORIZ. 0 20 40

KENOSHA ROAD RESURFACING

LakeCounty Division of Transportation

REMOVAL/REPAIR SHEET

STA. 48+50.00 TO 52+10.00

ROUTE	SECTION	SECTION NUMBER	SHEET	SHEETS
CH53	125	15-00999-20-RS	61	128

FILE NAME: U:\Design\Shrestha\15-00999-18-RS - Kenosha Rd (Green Bay to 21st St)\B-00999$Sheet_0061_Removal_Sheet.dgn

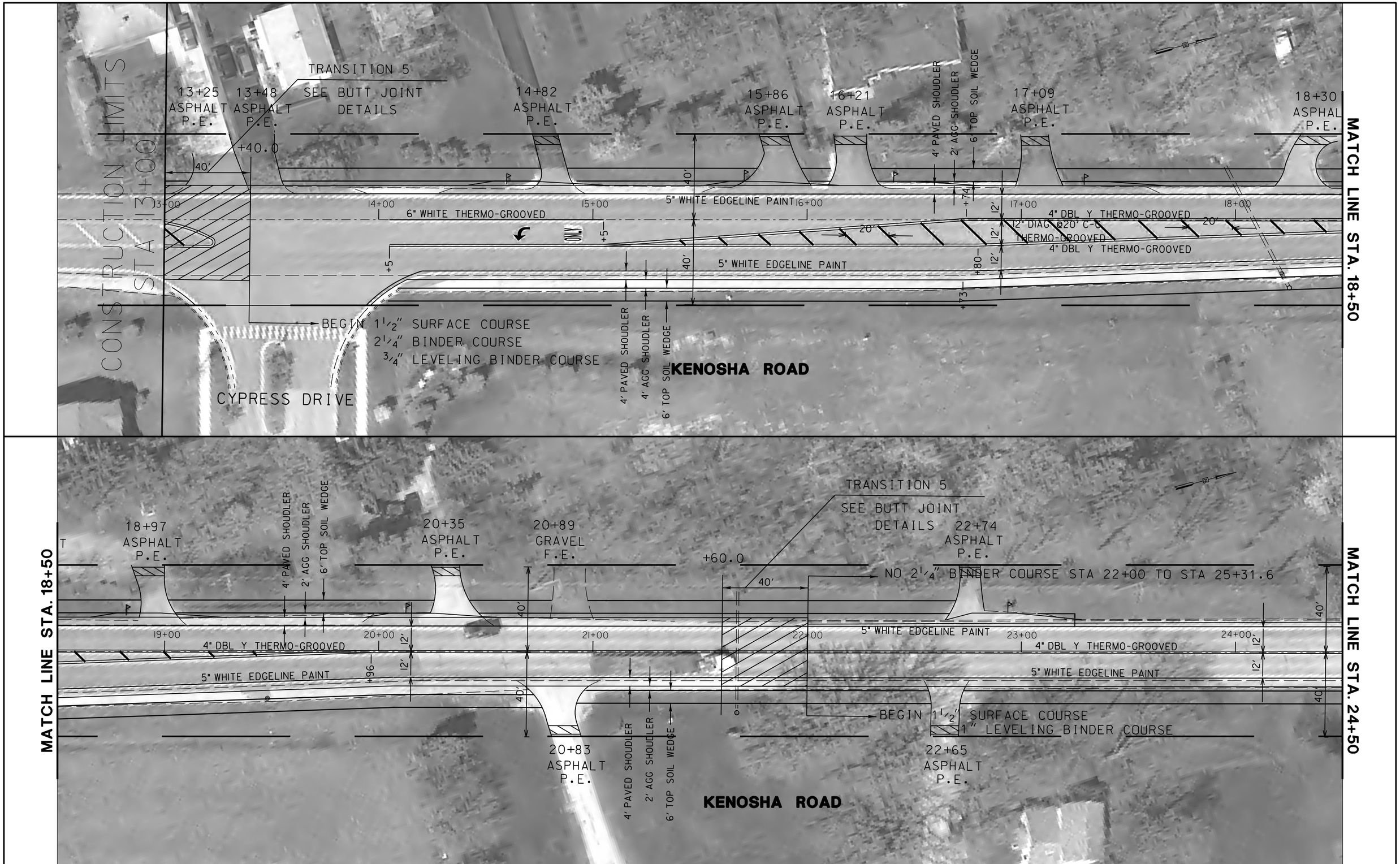

REVISIONS / REMARKS					
NO.	DESCRIPTION	DATE	BY	SURVEYOR:	/
		/ /		DSGNR/LIAISON:	
		/ /		PLOTTED BY:	hdsxs 3/10/2016

SCALES HORIZ. 0 20 40

KENOSHA ROAD RESURFACING

LakeCounty Division of Transportation

PAVEMENT MARKING PLAN SHEET

STA. 13+00.00 TO 24+50.00

ROUTE	SECTION	SECTION NUMBER	SHEET	SHEETS
CH53	125	15-00999-20-RS	62	128

FILE NAME: U:\Design\Shrestha\15-00999-18-RS - Kenosha Rd (Green Bay to 21st St)\B-00999$Sheet_0062_Plan_Sheet.dgn

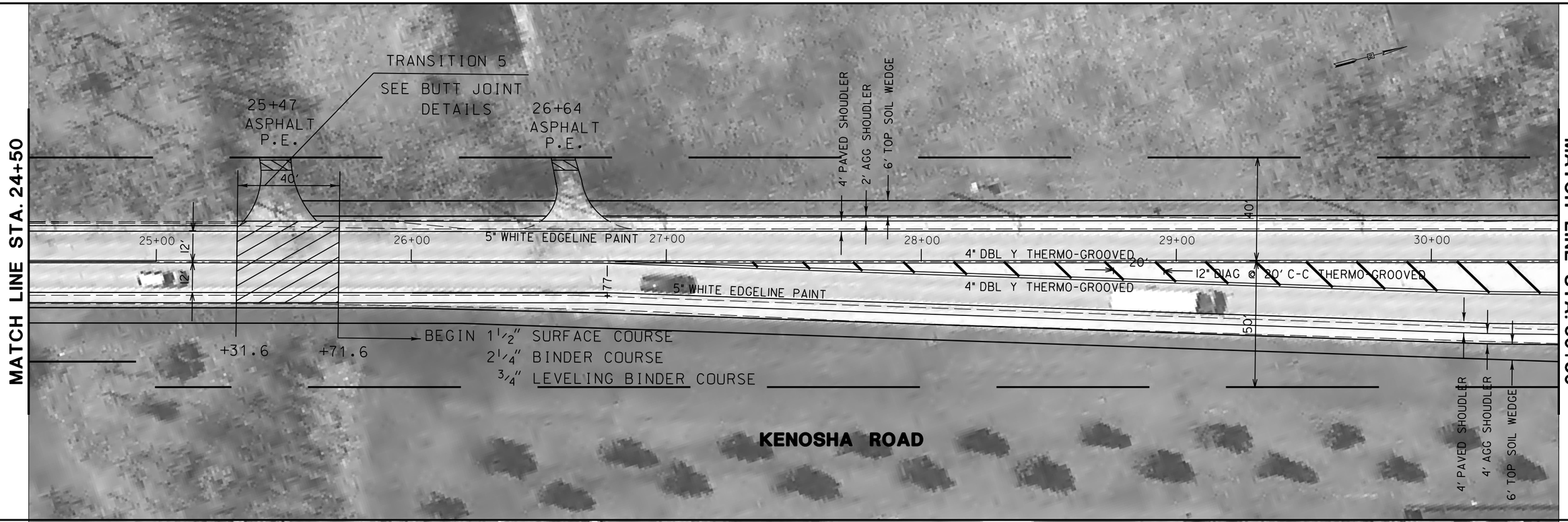

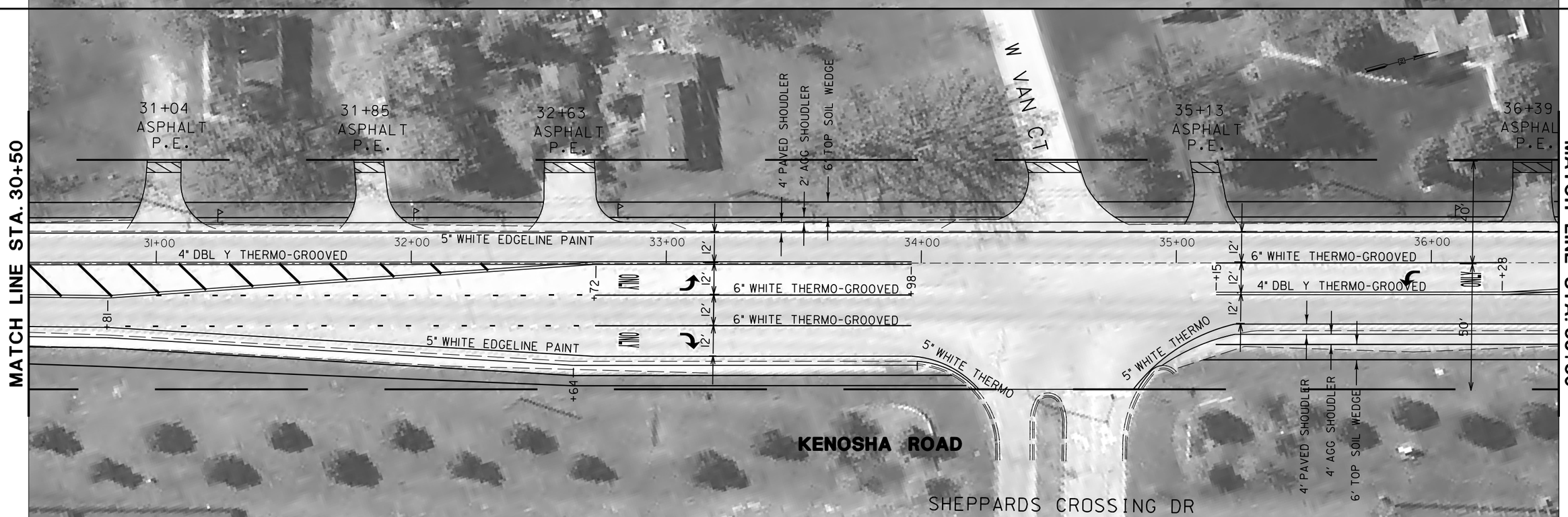

REVISIONS / REMARKS					
NO.	DESCRIPTION	DATE	BY	SURVEYOR:	/
		/ /		DSGNR/LIAISON:	
		/ /		PLOTTED BY:	hdsxs 3/10/2016

SCALES HORIZ. 0 20 40

KENOSHA ROAD RESURFACING

LakeCounty Division of Transportation

PAVEMENT MARKING PLAN SHEET

STA. 24+50.00 TO 36+50.00

ROUTE	SECTION	SECTION NUMBER	SHEET	SHEETS
CH53	125	15-00999-20-RS	63	128

FILE NAME: U:\Design\Shrestha\15-00999-18-RS - Kenosha Rd (Green Bay to 21st St)\B-00999$Sheet_0063_Plan_Sheet.dgn

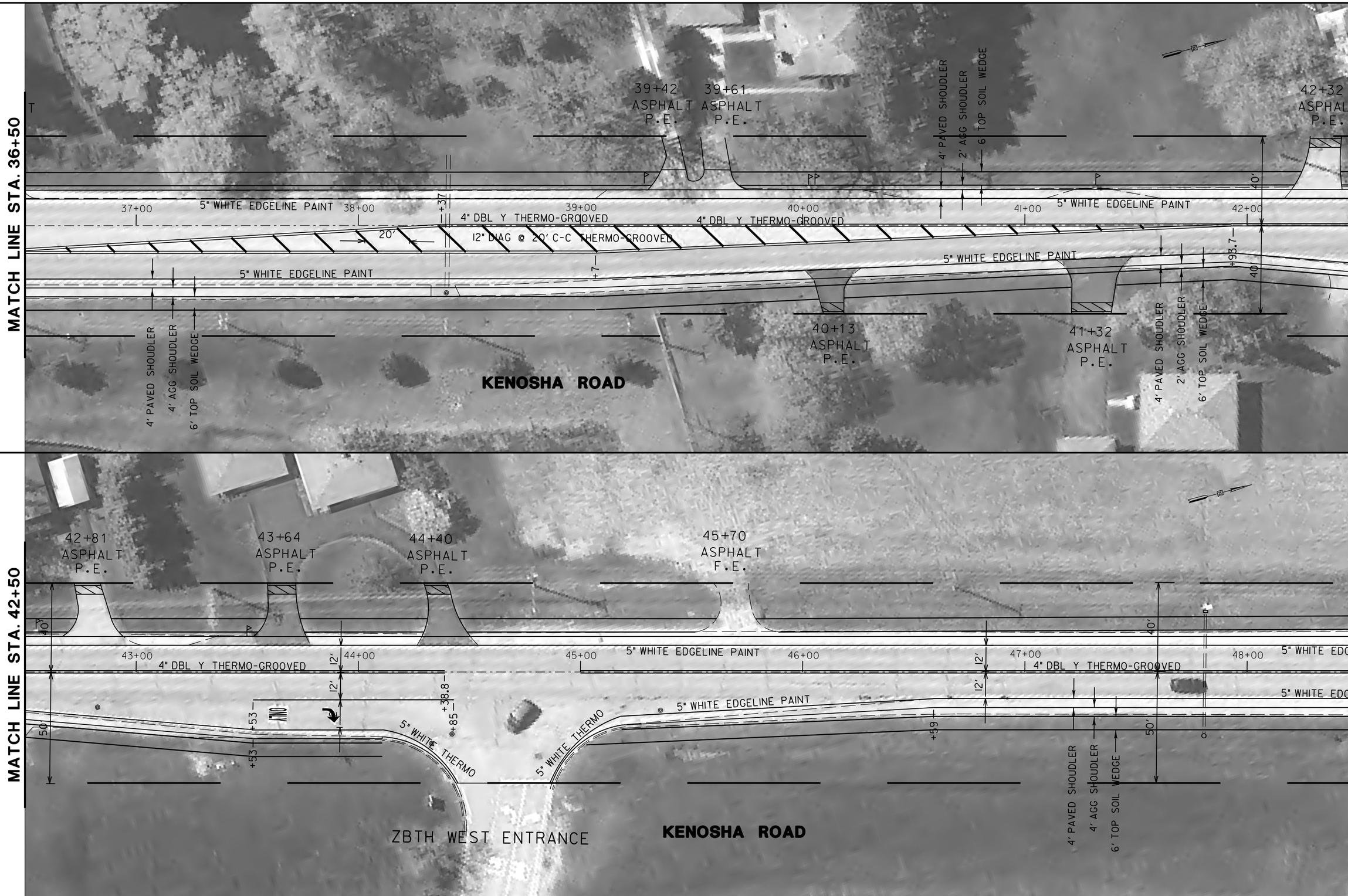

REVISIONS / REMARKS					
NO.	DESCRIPTION	DATE	BY	SURVEYOR:	/
		/ /		DSGNR/LIAISON:	
		/ /		PLOTTED BY:	hdsxs 3/10/2016

HORIZ. 0 20 40

KENOSHA ROAD RESURFACING

LakeCounty Division of Transportation

PAVEMENT MARKING PLAN SHEET

STA. 36+50.00 TO 48+50.00

ROUTE	SECTION	SECTION NUMBER	SHEET	SHEETS
CH53	125	15-00999-20-RS	64	128

FILE NAME: U:\Design\Shrestha\15-00999-18-RS - Kenosha Rd (Green Bay to 21st St)\B-00999$Sheet_0064_Plan_Sheet.dgn

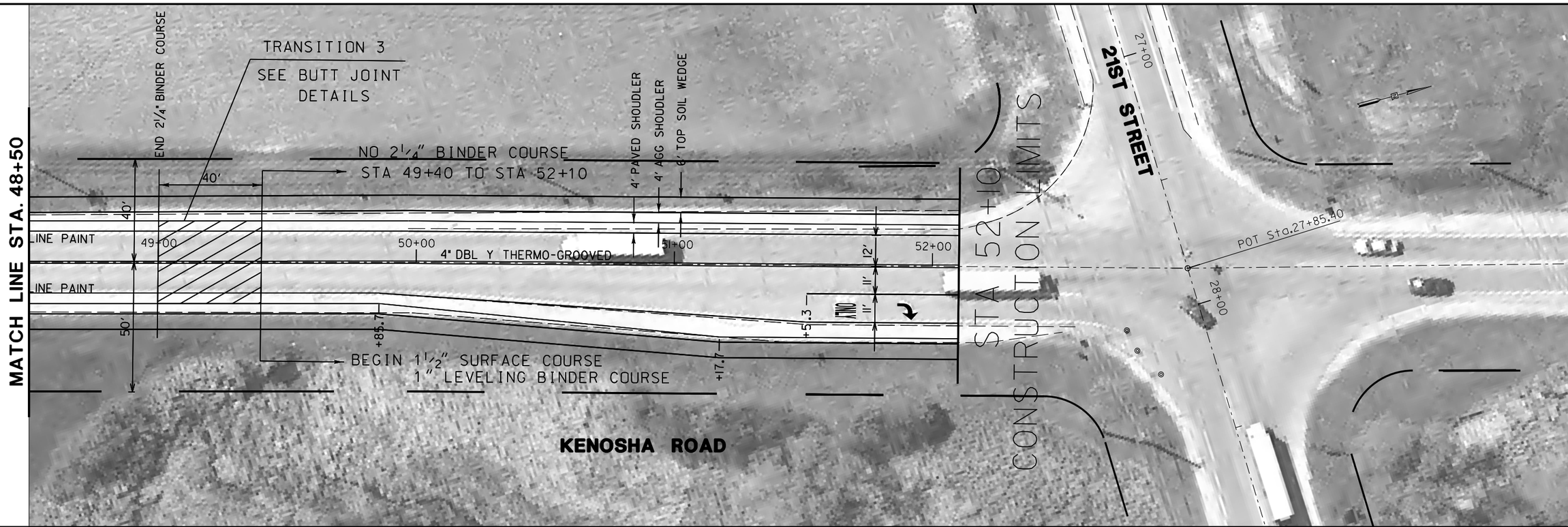

REVISIONS / REMARKS					
NO.	DESCRIPTION	DATE	BY	SURVEYOR:	/
		/ /		DSGNR/LIAISON:	
		/ /		PLOTTED BY:	hdsxs 3/10/2016

SCALES
HORIZ.
0 20 40

KENOSHA ROAD RESURFACING

LakeCounty
Division of Transportation

PAVEMENT MARKING PLAN SHEET

STA. 48+50.00 TO 52+10.00

ROUTE	SECTION	SECTION NUMBER	SHEET	SHEETS
CH53	125	15-00999-20-RS	65	128

FILE NAME: U:\Design\Shrestha\15-00999-18-RS - Kenosha Rd (Green Bay to 21st St)\B-00999$Sheet_0065_Plan_Sheet.dgn

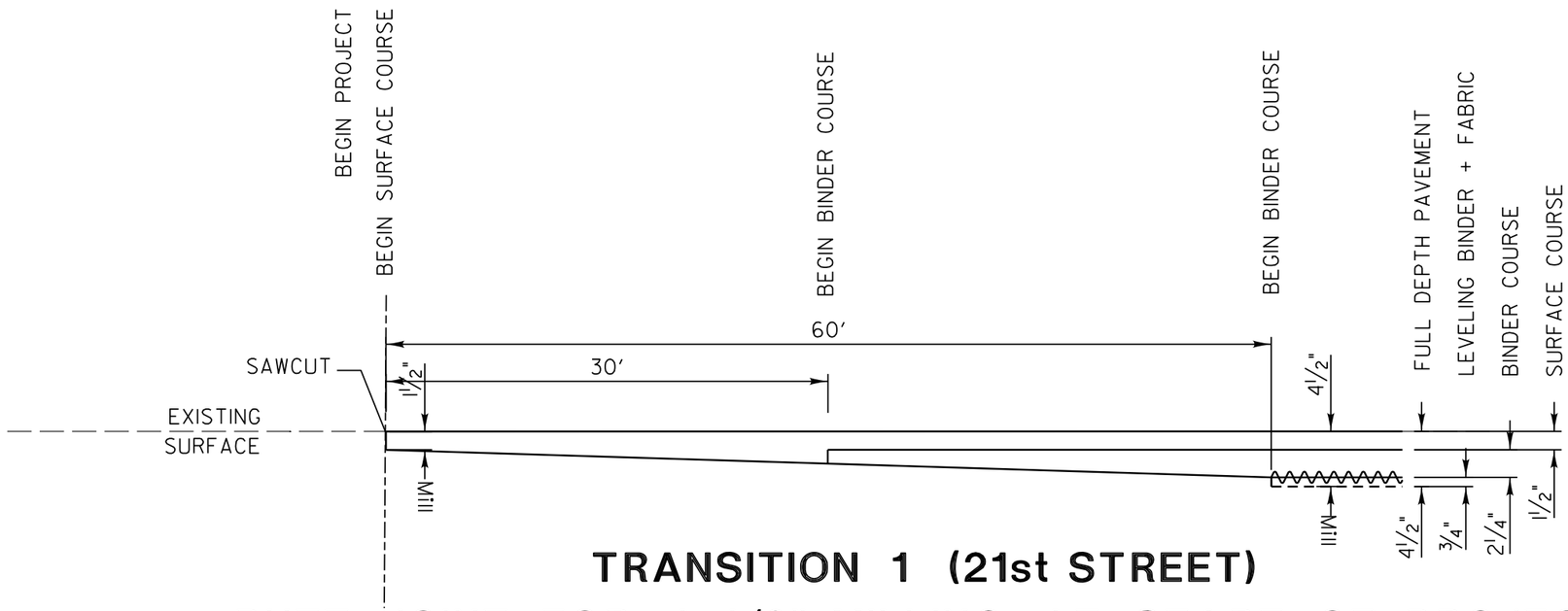

TRANSITION 1 (21st STREET)

BUTT JOINT FOR 4 1/2" MILLING AT START OF PROJECT

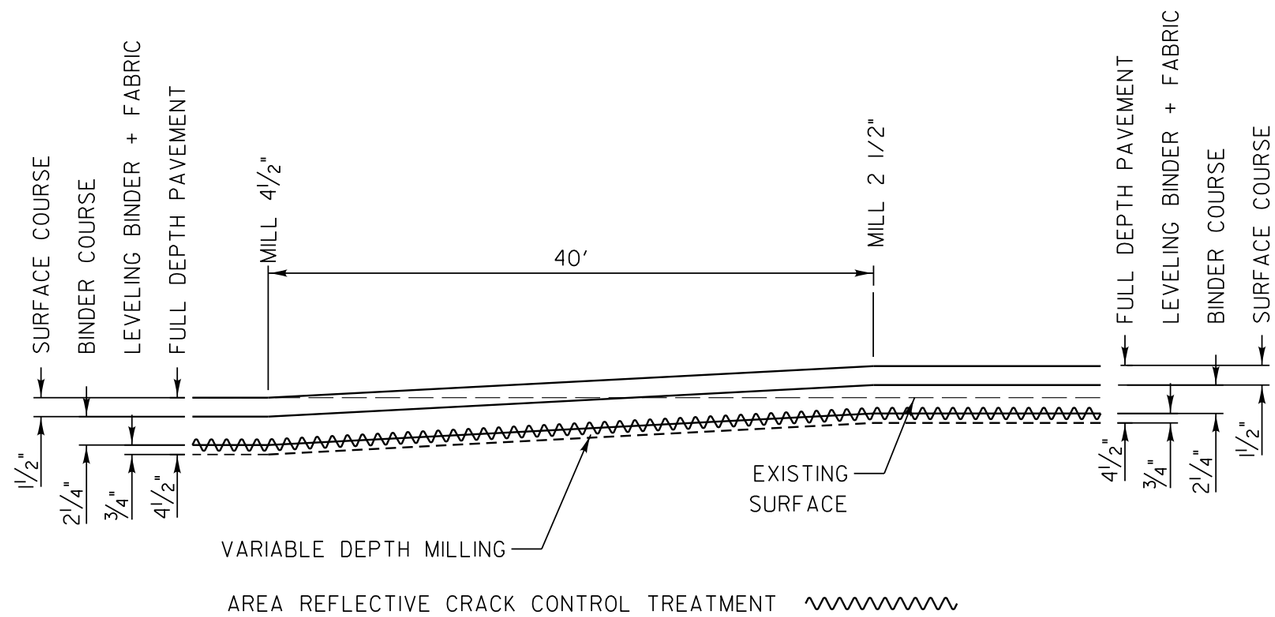

TRANSITION 2 (21st STREET)

FROM 4 1/2" TO 2 1/2" MILLING

REVISIONS / REMARKS					
NO.	DESCRIPTION	DATE	BY	SURVEYOR:	/
		/ /		DSGNR/LIAISON:	
		/ /		PLOTTED BY:	hdsxs 3/10/2016

VERT 3 0 — SCALES HORIZ. 0 5 10

21ST STREET/KENOSHA ROAD RESURFACING

LakeCounty Division of Transportation

BUTT JOINT DETAILS

21ST STREET/KENOSHA ROAD

ROUTE	SECTION	SECTION NUMBER	SHEET	SHEETS
CH67 CH53	146 125	15-00999-18-RS	66	128

FILE NAME: U:\Design\Shrestha\15-00999-18-RS 21st Street Resurfacing (131 to Kenosha Rd)\B-00999$Sheet_0066-68_Butt_Joint_Details.dgn

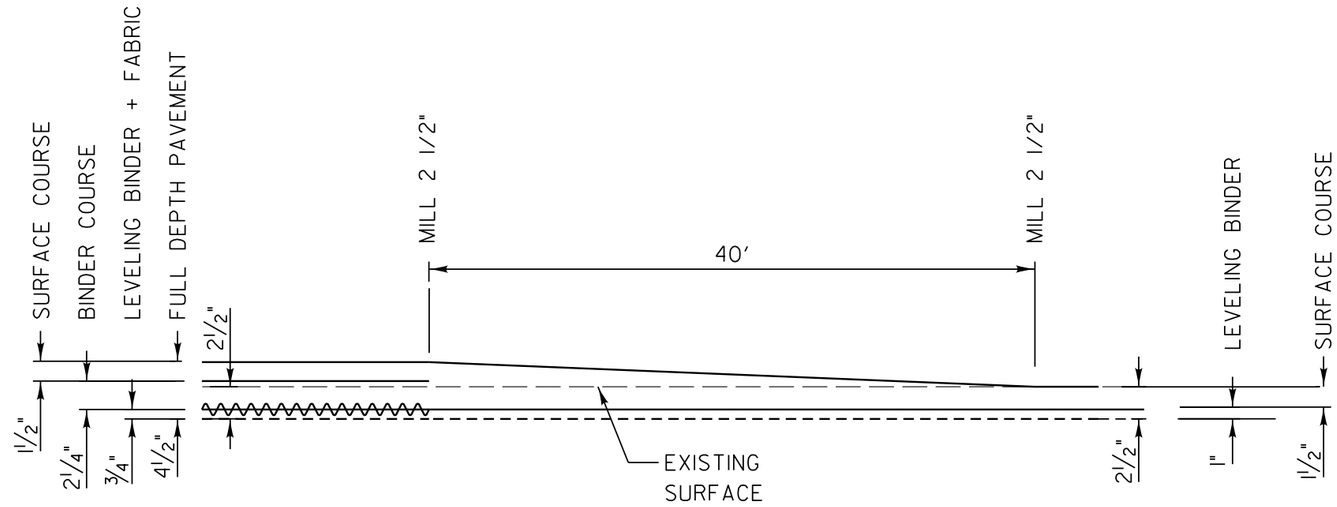

TRANSITION 3 (21st STREET & KENOSHA ROAD)
FROM 2 ½" MILL AND 4 ½" FILL TO 2 ½" MILL AND 2 ½" FILL

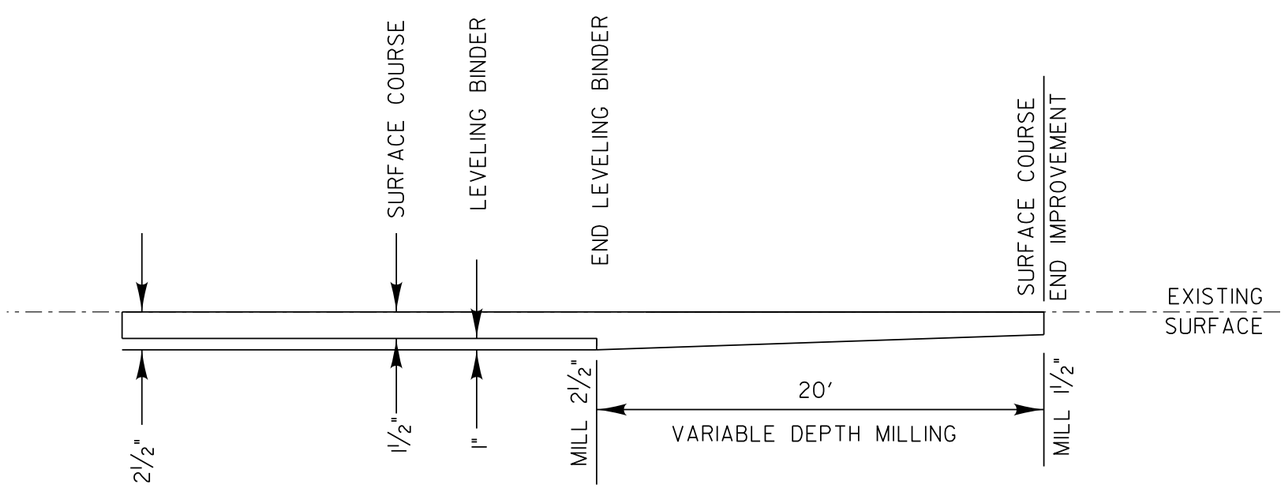

TRANSITION 4 (21st STREET)
AT END OF PROJECT

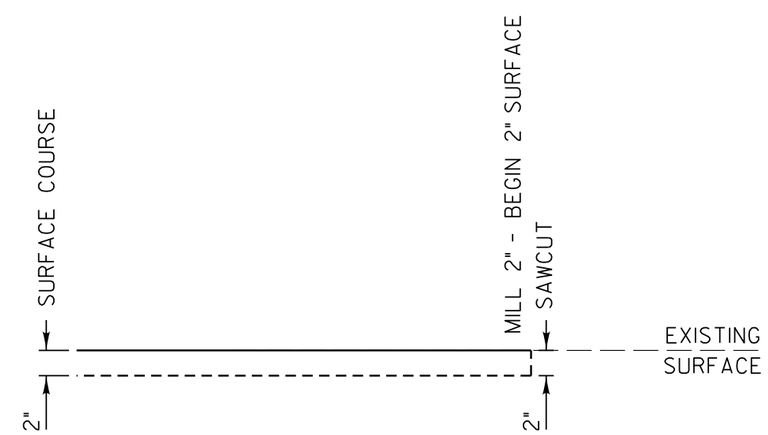

BUTT JOINT DETAIL AT SUNNYSIDE DR
(21st STREET)

REVISIONS / REMARKS					
NO.	DESCRIPTION	DATE	BY	SURVEYOR:	/
		/ /		DSGNR/LIAISON:	
		/ /		PLOTTED BY:	hdsxs 3/10/2016

SCALES: VERT. 3 0; HORIZ. 0 5 10

21ST STREET/KENOSHA ROAD RESURFACING

LakeCounty Division of Transportation

BUTT JOINT DETAILS
21ST STREET/KENOSHA ROAD

ROUTE	SECTION	SECTION NUMBER	SHEET	SHEETS
CH67	146	15-00999-18-RS	67	128
CH53	125			

FILE NAME: U:\Design\Shrestha\15-00999-18-RS 21st Street Resurfacing (131 to Kenosha Rd)\B-00999$Sheet_0066-68_Butt_Joint_Details.dgn

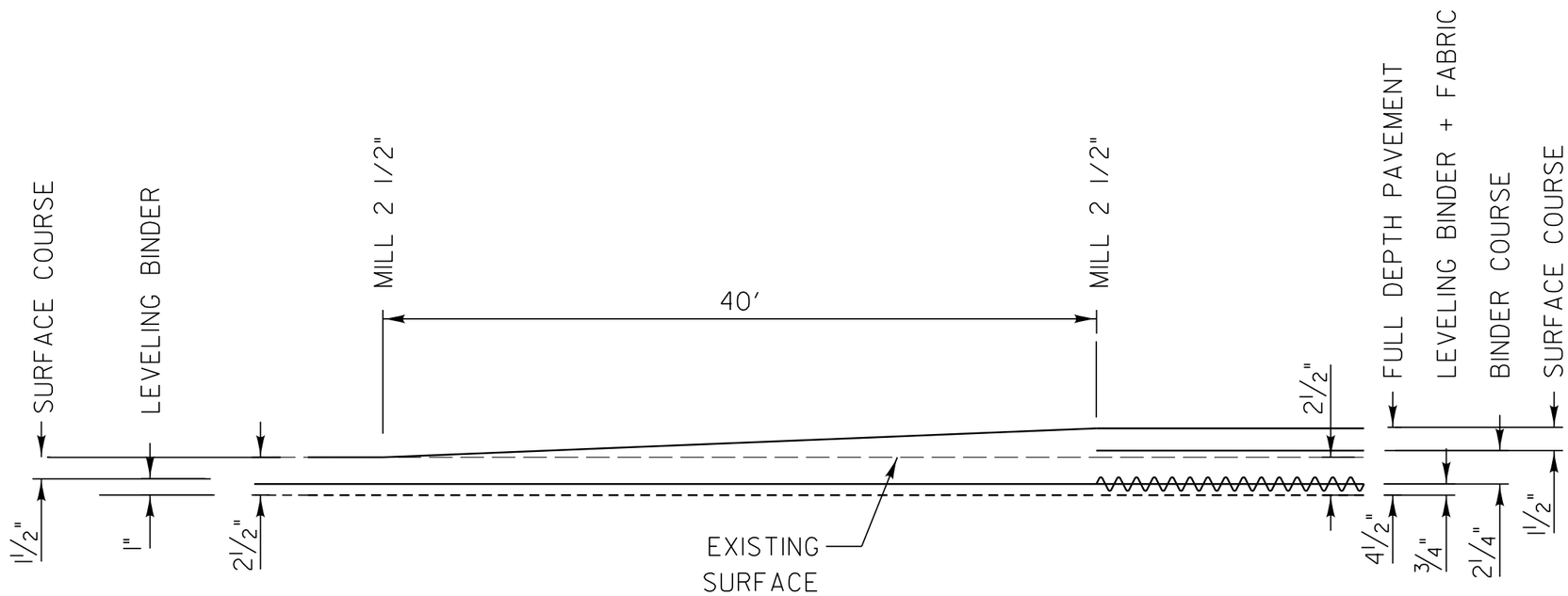

TRANSITION 5 (KENOSHA ROAD)

REVISIONS / REMARKS					
NO.	DESCRIPTION	DATE	BY	SURVEYOR:	/
		/ /		DSGNR/LIAISON:	
		/ /		PLOTTED BY:	hdsxs 3/10/2016

VERT 5 0 — SCALES HORIZ. 0 25 50

21ST STREET/KENOSHA ROAD RESURFACING

LakeCounty Division of Transportation

BUTT-JOINT DETAILS

21st STREET/KENOSHA ROAD

ROUTE	SECTION	SECTION NUMBER	SHEET	SHEETS
CH67 CH53	146 125	15-00999-18-RS	68	128

FILE NAME: U:\Design\Shrestha\15-00999-18-RS 21st Street Resurfacing (131 to Kenosha Rd)\B-00999$Sheet_0066-68_Butt_Joint_Details.dgn

WADSWORTH RD. MEDIAN SUMMARY OF QUANTITIES

E	S	PAY CODE	DESCRIPTION	UNIT	QUANTITY	SCHEDULE #
	S	20200100	EARTH EXCAVATION	CU YD	170	1
	S	35101400	AGGREGATE BASE COURSE, TYPE B	TON	25	2
		44000100	PAVEMENT REMOVAL	SQ YD	84	3
E		44000300	CURB REMOVAL	FOOT	115	-
		60235300	INLETS, TYPE A, TYPE 1 FRAME, CLOSED LID	EACH	1	3
E	S	60600605	CONCRETE CURB, TYPE B	FOOT	115	-
E	S	LC200051	REJECTED LOAD TRANSPORTATION	LOAD	1	-
	S	C2005824	SHRUB, RHUS AROMATICA GRO-LOW (GRO-LOW FRAGRANT SUMAC), 2' WIDTH, BB	EACH	45	-
	S	C2008318	SHRUB, ROSA PURPLE PAVEMENT (PURPLE PAVEMENT ROSE), 18" HEIGHT, CONTAINER	EACH	18	-
	S	K0012990	PERENNIAL PLANTS, ORNAMENTAL TYPE, GALLON POT	UNIT	5	-
	S	K0036118	MULCH PLACEMENT 3"	SQ YD	393	2
	S	X2110100	TOPSOIL FURNISH AND PLACE, SPECIAL	CU YD	197	2
	S	X6013600	PIPE UNDERDRAINS 4" (MODIFIED)	FOOT	304	3
	S	X6062206	STAMPED COLORED PORTLAND CEMENT CONCRETE MEDIAN SURFACE 6 INCH	SQ FT	1018	2

E ESTIMATED OR CONTINGENCY ITEM

S REQUIRES SPECIAL PROVISION

1 EARTH EXCAVATION

STATION FROM	STATION TO	LENGTH FT	CUT AREA SQ FT	CUT DEPTH FT	CUT VOLUME CU YD
132+47.60	133+24.45	76.85	402.00	0.83	12.36
133+24.45	136+28.45	304.00	3372.00	1.00	124.89
136+28.45	138+02.14	173.69	568.00	0.83	17.46
				SUBTOTAL (CY):	154.71
PAY CODE 20200100				10% CONTINGENCY	15.47
				TOTAL (CY):	170.18

2 MISCELLANEOUS MEDIAN ITEMS

FROM	TO	LENGTH (FEET)	AVERAGE WIDTH (FEET)	DEPTH (INCHES)	AREA (SQ. FT.)	QUANTITY (SQ. FT.)
STAMPED COLORED PORTLAND CEMENT CONCRETE MEDIAN SURFACE 6 INCH						
132+47.60	133+24.45	76.9	5.2	6.0	402.0	402.0
136+28.45	138+02.14	173.7	3.3	6.0	568.0	568.0
PAY CODE X6062206					SUBTOTAL	970.0
					5% CONTINGENCY	48.5
					TOTAL	1018.5

FROM	TO	LENGTH (FEET)	AVERAGE WIDTH (FEET)	DEPTH (INCHES)	AREA (SQ. FT.)	QUANTITY (TONS)
AGGREGATE BASE COURSE, TYPE B						
132+47.60	133+24.45	76.9	5.2	4.0	402.0	9.9
136+28.45	138+02.14	173.7	3.3	4.0	568.0	14.0
PAY CODE 35101400 (2 Tons/Cubic Yard))					SUBTOTAL	23.9
					5% CONTINGENCY	1.2
					TOTAL	25.1

FROM	TO	LENGTH (FEET)	AVERAGE WIDTH (FEET)		AREA (SQ. FT.)	QUANTITY (SQ. YD.)
MULCH PLACEMENT 3"						
133+24.45	136+28.45	304.0	11.1		3372.0	374.7
PAY CODE K0036118					SUBTOTAL	374.7
					5% CONTINGENCY	18.7
					TOTAL	393.4

FROM	TO	LENGTH (FEET)	AVERAGE WIDTH (FEET)	DEPTH (INCHES)	AREA (SQ. FT.)	QUANTITY (CU. YD.)
TOPSOIL FURNISH AND PLACE, SPECIAL						
133+24.45	136+28.45	304.0	11.1	18.0	3372.0	187.3
PAY CODE X2110100					SUBTOTAL	187.3
					5% CONTINGENCY	9.4
					TOTAL	196.7

3 DRAINAGE RELATED ITEMS

FROM	TO	LENGTH (FEET)	DESCRIPTION		LENGTH (FEET)
PIPE UNDERDRAINS 4" (MODIFIED)					
133+24.45	134+88.45	164.0	4" UNDERDRAIN		164.0
134+88.45	136+28.45	140.0	4" UNDERDRAIN		140.0
PAY CODE X6013600				TOTAL	304.0

STA.	OFFSET		DESCRIPTION		QUANTITY (EACH)
INLETS, TYPE A, TYPE 1 FRAME, CLOSED LID					
134+88.45	-	-	-	-	1.0
PAY CODE 60235300					1.0

FROM	TO	LENGTH (FEET)	DESCRIPTION	WIDTH (FEET)	QUANTITY (SQ YD)
PAVEMENT REMOVAL					
133+24.45	134+83.45	159.0	4" UNDERDRAIN	2.0	35.3
134+93.45	136+28.45	135.0	4" UNDERDRAIN	2.0	30.0
134+83.45	134+93.45	10.0	INLET, TYPE A	10.0	11.1
				SUBTOTAL	76.4
				10% CONTINGENCY	7.6
PAY CODE 60236200				TOTAL	84.1

REVISIONS / REMARKS					
NO.	DESCRIPTION	DATE	BY	SURVEYOR:	/
		/ /		DSGNR/LIAISON:	
		/ /		PLOTTED BY:	HDI8574 3/23/2016

WADSWORTH RD. ROADWAY ENHANCEMENTS

LakeCounty Division of Transportation

SUMMARY/SCHEDULE OF QUANTITIES

WADSWORTH RD. ROADWAY ENHANCEMENTS

ROUTE	SECTION	SECTION NUMBER	SHEET	SHEETS
CH17	55	15-00999-18-RS	69	128

FILE NAME: U:\Design\Carrier\0 - Wadsworth at Sheridan Median\15-00999-18-RS Landscape Median.dgn

WADSWORTH ROAD
TRAFFIC CONTROL PLAN

TRAFFIC CONTROL AND PROTECTION GENERAL NOTES

1. APPLICABLE STANDARDS

   701101-05, 701427-04, 701601-09
   701901-05

   LC7003, LC7004, LC7200

2. The permanent traffic control depicted hereon is the minimum requirement. Additional traffic control devices as specified by the above Highway Standards and the Special Provisions shall be placed by the contractor to the satisfaction of the engineer. All traffic control devices shall be considered incidental to the lump sum pay item "TRAFFIC CONTROL AND PROTECTION (SPECIAL)" unless otherwise indicated in the plans or special provisions.

3. All traffic control warning signs and associated signing mounted with the warning signs shall have black legends and borders on fluorescent orange reflective sheeting.

4. All construction signs, barricades and other devices required to control traffic shall be furnished, installed and maintained by the Contractor.

5. All traffic control devices shall be removed, covered or turned away from traffic immediately when they are no longer necessary. When a sign is covered, it's post shall have a reflective 3 inch x 6 inch delineator installed.

6. The sign spacing for the above Highway Standards shall be according to the Sign Spacing Table shown on this Traffic Control Plan.

7. Road name plates shall be installed on the "ROAD WORK AHEAD" signs at the intersections shown on this Traffic Control Plan. The road name plates shall be 9 inch blanks with 6 inch uppercase and 5 inch lowercase lettering. The road name plates shall be furnished by the Contractor.

8. "ROAD WORK AHEAD" signs shall be equipped with mono-directional Type A amber flashing lights.

SIGN NO.		SIGN TYPE
1		W20-1 (O)-48
2	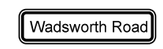	W17-I 100 (O)-9xVARIABLE
3		M6-1R (O)-2115
4		M6-1L (O)-2115
5		M6-4 (O)-2115

POSTED SPEED LIMIT

WADSWORTH ROAD - 35 MPH
SHERIDAN ROAD - 40 MPH

TRAFFIC CONTROL SIGN SPACING TABLE	
55 MPH	500 FT.
45-50 MPH	350 FT.
<45 MPH	200 FT.

REVISIONS / REMARKS					
NO.	DESCRIPTION	DATE	BY	SURVEYOR:	/
		/ /		DSGNR/LIAISON:	
		/ /		PLOTTED BY:	HDI8574 3/3/2016

WADSWORTH RD. ROADWAY ENHANCEMENTS

LakeCounty Division of Transportation

TRAFFIC CONTROL PLAN
WADSWORTH RD. ROADWAY ENHANCEMENTS

ROUTE	SECTION	SECTION NUMBER	SHEET	SHEETS
CH55	999	15-00999-18-RS	70	128

FILE NAME: U:\Design\Carrier\0 - Wadsworth at Sheridan Median\15-00999-18-RS Landscape Median.dgn

REVISIONS / REMARKS					
NO.	DESCRIPTION	DATE	BY	SURVEYOR:	/
		/ /		DSGNR/LIAISON:	
		/ /		PLOTTED BY:	HDI8574 3/3/2016

SCALES: 0 100 200

WADSWORTH RD. ROADWAY ENHANCEMENTS

LakeCounty Division of Transportation

TRAFFIC CONTROL PLAN

WADSWORTH RD. ROADWAY ENHANCEMENTS

ROUTE	SECTION	SECTION NUMBER	SHEET	SHEETS
CH55	999	15-00999-18-RS	71	128

FILE NAME: U:\Design\Carrier\0 - Wadsworth at Sheridan Median\15-00999-18-RS Landscape Median.dgn

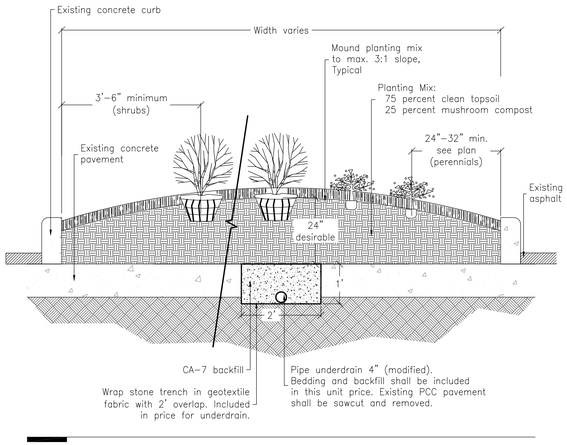

Section
Landscape Island

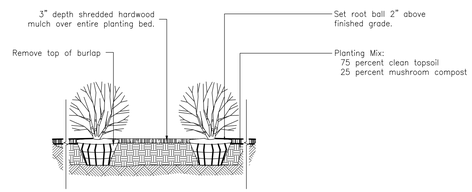

Detail
Shrub Planting

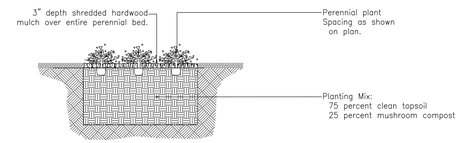

Detail
Perennial Planting

Plant List

Shrubs

Key	Qty.	Size	Botanical Name	Common Name	Remarks
RHG	45	24"	Rhus aromatica 'Gro-Low'	Gro-Low Fragrant Sumac	BB
ROS	18	#3	Rosa rugosa 'Purple Pavement'	Purple Pavement Rose	Container

Perennials, Ornamental Grasses and Groundcovers

Key	Qty.	Size	Botanical Name	Common Name	Remarks
ACH	69	#1	Achillea 'Moonshine'	Moonshine Yarrow	Container
ALL	185	#1	Allium 'Summer Beauty'	Summer Beauty Allium	Container
BER	38	#1	Bergenia cordifolia 'Winter Glow'	Winter Glow Bergenia	Container
CMK	49	#1	Calamagrostis acutiflora 'Karl Foerster'	Feather Reed Grass	Container
HHR	46	#1	Hemerocallis 'Happy Returns'	Happy Returns Daylily	Container
PAN	46	#1	Panicum virgatum 'Heavy Metal'	Heavy Metal Switch Grass	Container
SCH	39	#1	Schizachyrium scoparium	Little Bluestem	Container

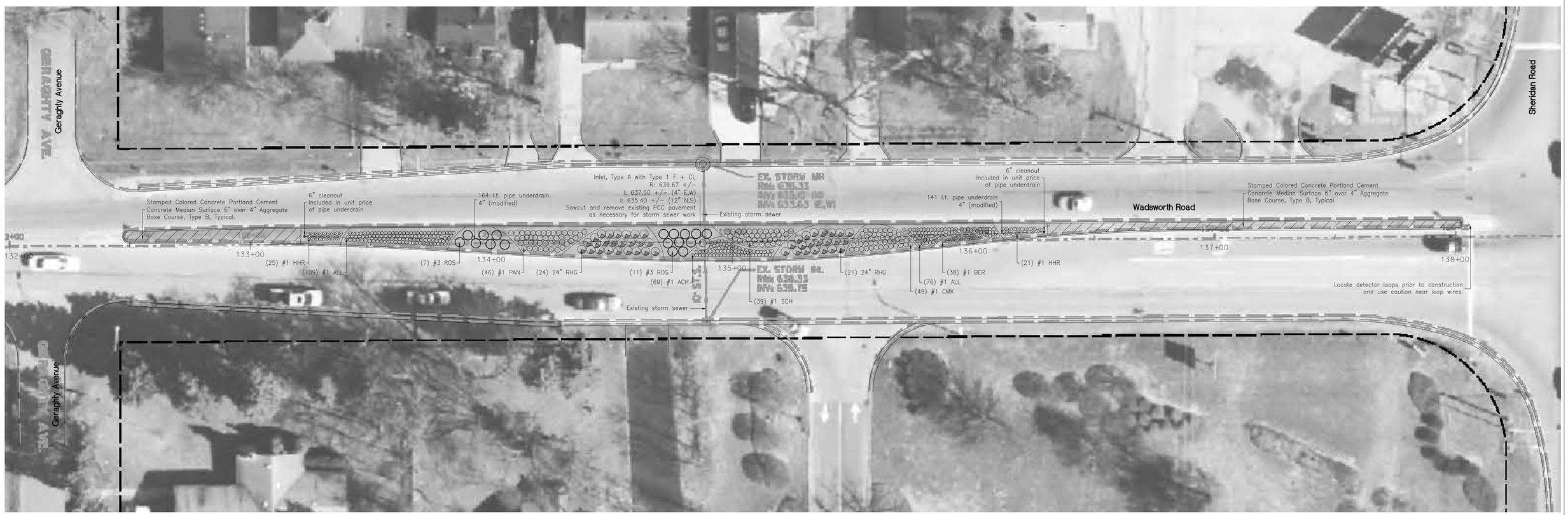

REVISIONS / REMARKS					
NO.	DESCRIPTION	DATE	BY	SURVEYOR:	___/___
___	___	__/__/__	___	DSGNR/LIAISON:	___
___	___	__/__/__	___	PLOTTED BY:	$USRN$ $$DAT$$$$

SCALES
HORIZ.
0 20 40

Wadsworth Rd. Roadway Enhancements

LakeCounty
Division of Transportation

DAVID R. McCALLUM ASSOCIATES, INC.
LANDSCAPE ARCHITECTS
350 N. Milwaukee Avenue | Libertyville, Illinois 60048
T 847.362.3209 | F 847.362.3214

LANDSCAPE PLAN

ROUTE	SECTION	SECTION NUMBER	SHEET	SHEETS
CH17	55	15-00999-18-RS	72	128

PLOTTED: 03.16.16

PIPE OUTLET TO FLAT AREA

Pipe Outlet To Flat Area
No Well-defined Channel

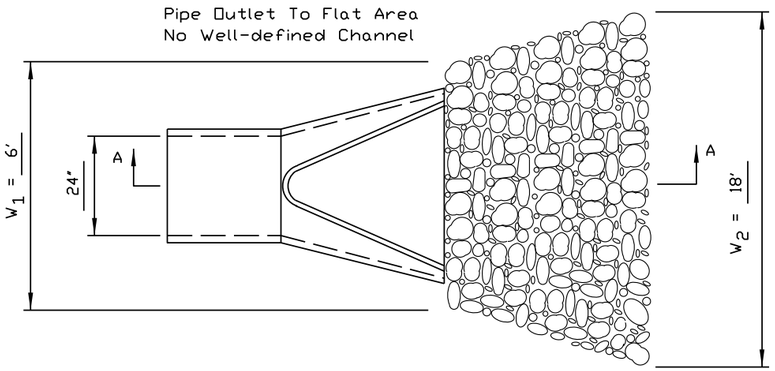

PLAN

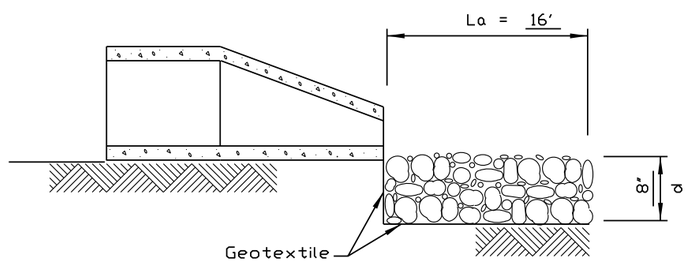

SECTION A-A

NOTES:
1. The filter fabric shall meet the requirements in material specifications 592 GEOTEXTILE Table 1 or 2, class I, II or III.
2. The rock riprap shall shall meet the IDOT requirements for the following gradation: RR-3.
3. The riprap shall be placed according to construction specification 61 LOOSE ROCK RIPRAP. The rock may be equipment placed.

REFERENCE			STANDARD DWG. NO.
Project			IL-610
Designed	Date	NRCS Natural Resources Conservation Service	SHEET 1 OF 1
Checked	Date		DATE 9-15-93
Approved	Date		

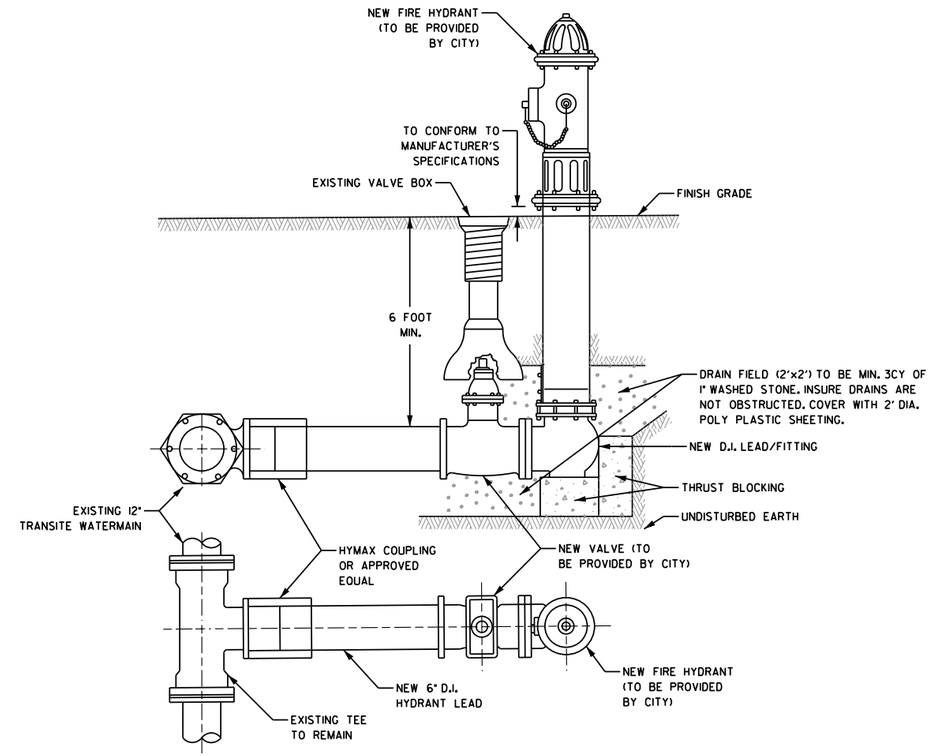

TYPICAL HYDRANT INSTALLATION

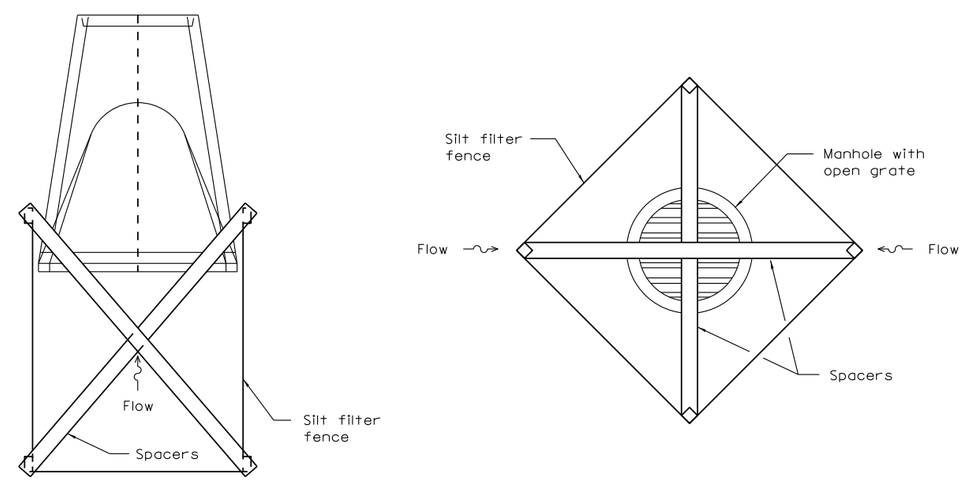

INLET AND PIPE PROTECTION (SPECIAL)

REVISIONS / REMARKS					
NO.	DESCRIPTION	DATE	BY	SURVEYOR:	/
		/ /		DSGNR/LIAISON:	
		/ /		PLOTTED BY:	HD18574 3/9/2016

21ST ST / KENOSHA RD / WADSWORTH RD

LakeCounty Division of Transportation

PROJECT DETAILS
21ST ST / KENOSHA RD / WADSWORTH RD

ROUTE	SECTION	SECTION NUMBER	SHEET	SHEETS
CH17 CH53 CH67	55 125 146	15-00999-18-RS	73	128

FILE NAME: U:\Design\Shrestha\15-00999-18-RS 21st Street Resurfacing (131to Kenosha Rd)\Details\B-00999$Sheet_0073_LC_Details.dgn

ENGLISH		TRENCH WIDTH (W)		MIN OFFSET FROM E.O.P.* FOR NO TB		½ PIPE AREA [O.D.]
S.S. DIA.	T	WITHOUT SHORING	WITH SHORING	WITHOUT SHORING	WITH SHORING	
(IN)	(IN)	(FT)	(FT)	(FT)	(FT)	(SQ FT)
10	2.00	2.67	4.17	3.33	4.08	0.53
12	2.00	2.83	4.33	3.42	4.17	0.70
15	2.25	3.13	4.63	3.56	4.31	1.04
18	2.50	3.42	4.92	3.71	4.46	1.44
21	2.75	3.71	5.21	3.85	4.60	1.92
24	3.00	4.00	5.50	4.00	4.75	2.45
27	3.25	4.29	5.79	4.15	4.90	3.06
30	3.50	4.58	6.08	4.29	5.04	3.73
36	4.00	5.17	6.67	4.58	5.33	5.28
42	4.50	5.75	7.25	4.88	5.63	7.09
48	5.00	6.33	7.83	5.17	5.92	9.17

* TO CENTER LINE OF PIPE

DESIGN NOTES:

1. Trench backfill is required if the storm sewer or culvert offset from the edge of the pavement is less than the tabulated values (the inner trench wall is closer than 2' to the edge of pavement)
2. Payment for the trench backfill shall not exceed the quantity computed using the maximum trench width dimensions. If the trench is excavated beyond these limits, the contractor shall furnish and place any additional trench backfill at his/her expense.
3. If the trench width is less than the above maximum values, payment will be based on the actual dimensions of the dug trench.
4. Bedding shall be placed from 4" under the pipe to the spring line of the pipe and is incidental to the corresponding storm sewer or culvert pay item.
5. If any part of the excavation for a drainage structure falls within 2' of the edge of pavement, the space between the side of the excavation and the outer surface of the drainage structure shall be filled with trench backfill. The cost of this item is included in the pay item for the drainage structure.

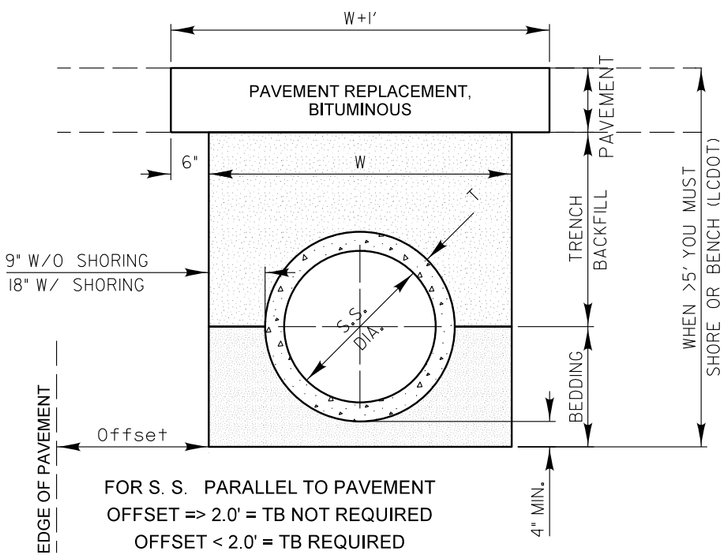

SCALE: 1" = 2'

REVISIONS	DATE
Text Revision	11/06/07
Text Update	7/14/11

LakeCounty Division of Transportation

APPROVED BY: M. G. ZEMAITIS
DATE: APRIL 1, 2007

TRENCH WIDTHS FOR TRENCH BACKFILL & PAVEMENT REPLACEMENT, BITUMINOUS

LC0020

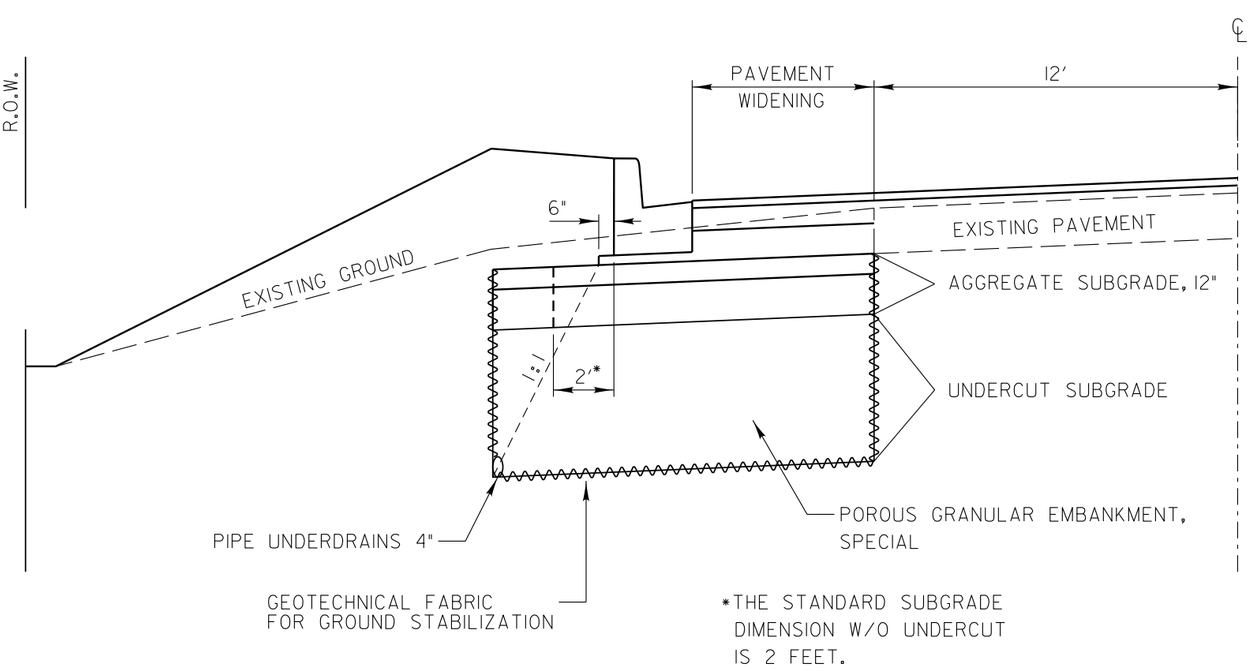

IN UNSTABLE AREAS, THE SUBGRADE SHALL BE:
UNDERCUT (PAID FOR AS EARTH EXCAVATION PER CU YD);
REINFORCED WITH GEOTECHNICAL FABRIC FOR GROUND STABILIZATION (PAID FOR PER SQ YD);
DRAINED BY INSTALLATION OF PIPE UNDERDRAINS, 4" (PAID FOR PER FOOT);
BACKFILLED WITH POROUS GRANULAR EMBANKMENT, SPECIAL (PAID FOR PER TON) AND;
TOPPED WITH AGGREGATE SUBGRADE, 12" (300mm) (PAID FOR PER SQ YD).

SCALE:
HORIZONTAL 1" = 5'
VERTICAL 1" = 2.5'

REVISIONS	DATE

LakeCounty Division of Transportation

APPROVED BY: M. G. Zemaitis
DATE: APRIL 1, 2007

UNDERCUT DETAIL

LC2000

NO.	REVISIONS / REMARKS DESCRIPTION	DATE	BY
		/ /	SURVEYOR: DSGNR/LIAISON: PLOTTED BY:
			HD8514 3/9/2006

FILE NAME: U:\Design\Streets\15-00999-18-RS 21st Street Resurfacing (31st to Kenosha Rd)\Details\B-00999Sheet_0074-LC_Details.dgn

21ST ST / KENOSHA RD / WADSWORTH RD

LakeCounty Division of Transportation

LAKE COUNTY DETAILS
21ST ST / KENOSHA RD / WADSWORTH RD

ROUTE	SECTION	SECTION NUMBER	SHEET	SHEETS
CH17 CH53 CH67	55 125 146	15-00999-18-RS	74	128

FOR BARE EARTH APPLICATION ONLY

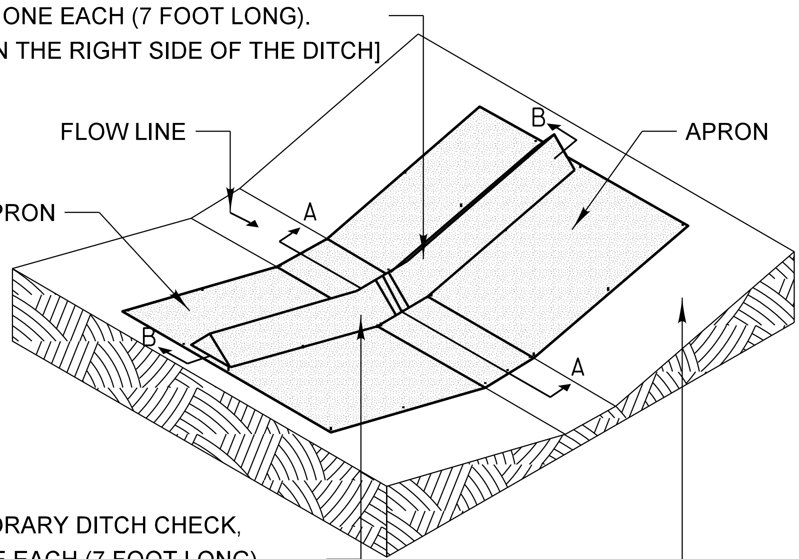

SILT DIKE UNIT
ISOMETRIC

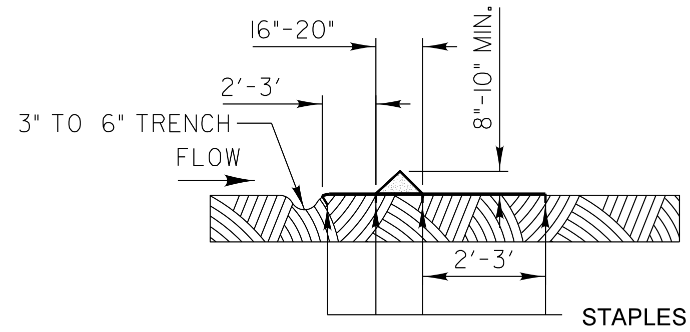

SECTION A-A

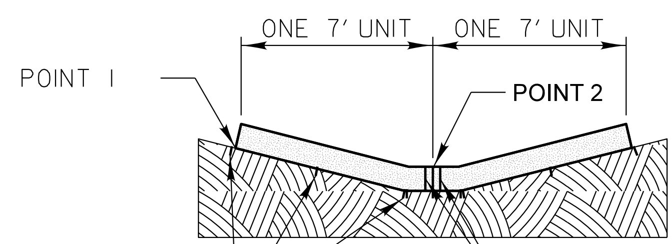

SECTION B-B

NOTES:
THE TEMPORARY DITCH CHECK SHALL BE USED IN BARE EARTH DITCH LINES AND SHALL BE REMOVED JUST PRIOR TO THE INSTALLATION OF EROSION CONTROL BLANKET AND SEEDING.

THE INSTALLATION SHOWN WILL BE MEASURED AND PAID FOR AS A TEMPORARY DITCH CHECK 14 FEET IN LENGTH.

STAPLES SHALL BE PLACED WHERE THE UNITS OVERLAP AND IN THE CENTER OF THE 7' UNIT AS SHOWN ON THE DIAGRAM.

POINT 1 MUST BE HIGHER THAN POINT 2 TO INSURE THAT WATER FLOWS OVER THE DIKE AND NOT AROUND THE ENDS.

REVISIONS	DATE
ADDED DIMENSIONS	04/11/08
REVISED PAY ITEM	04/15/10
ADDED PLASTIC BERM (pg2)	10/10/12

LakeCounty Division of Transportation
APPROVED BY: M. G. ZEMAITIS
DATE: APRIL 1, 2007

TEMPORARY DITCH CHECK INSTALLATION FOR ROADWAY OR DRAINAGE DITCH

(SHEET 1 OF 2)

LC2050

FOR USE WHILE ESTABLISHING FINAL LANDSCAPING

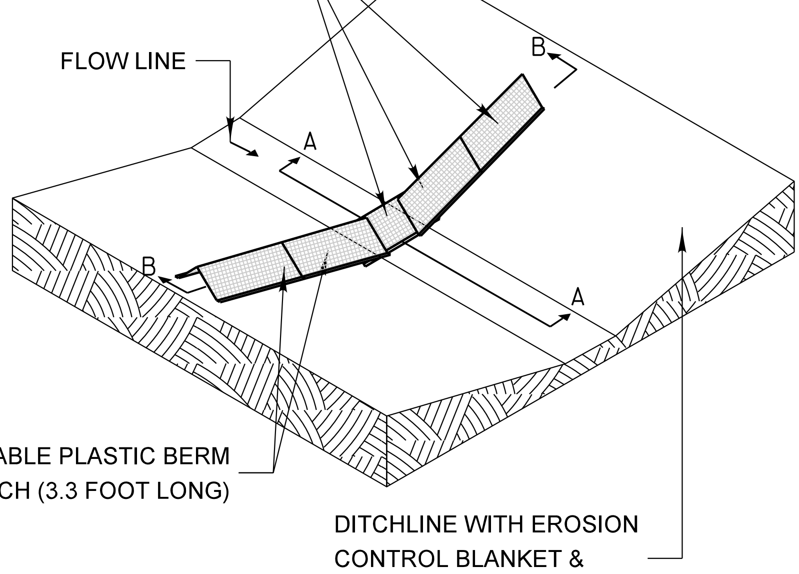

PERMEABLE PLASTIC BERM
ISOMETRIC

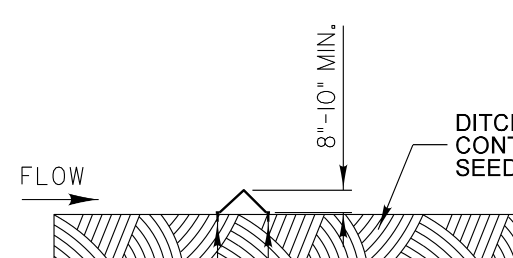

SECTION A-A

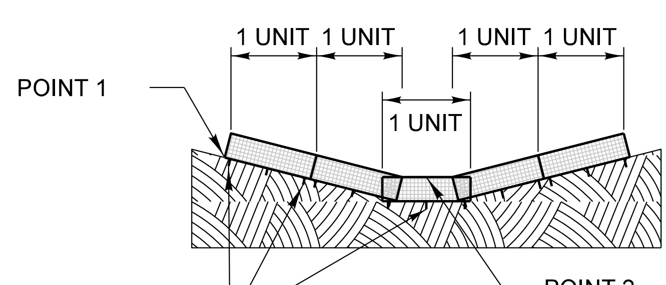

SECTION B-B

NOTES:
THE PERMEABLE PLASTIC BERM SHALL REPLACE THE TEMPORARY DITCH CHECK AFTER THE INSTALLATION OF EROSION CONTROL BLANKET AND SEEDING.

EACH PERMEABLE PLASTIC BERM IS 3.3 FEET IN LENGTH. THE MINIMUM INSTALLATION IN A DITCH SHALL BE THREE UNITS. THE INSTALLATION SHOWN WILL BE MEASURED AND PAID FOR AS A PERMEABLE PLASTIC BERM 16.5 FEET IN LENGTH (5 UNITS).

STAPLES SHALL BE PLACED WHERE THE UNITS OVERLAP AND ACCORDING TO THE MANUFACTURER'S INSTALLATION INSTRUCTIONS.

POINT 1 MUST BE HIGHER THAN POINT 2 TO INSURE THAT WATER FLOWS THROUGH OR OVER THE BERM AND NOT AROUND THE ENDS.

REVISIONS	DATE
ADDED DIMENSIONS	04/11/08
REVISED PAY ITEM	04/15/10
ADDED PLASTIC BERM (pg2)	10/10/12

LakeCounty Division of Transportation
APPROVED BY: M. G. ZEMAITIS
DATE: APRIL 1, 2007

TEMPORARY DITCH CHECK INSTALLATION FOR ROADWAY OR DRAINAGE DITCH

(SHEET 2 OF 2)

LC2050

1. SET POSTS AND EXCAVATE OR SLIT-TRENCH A 6-INCH DEEP TRENCH UPSLOPE ALONG THE LINE OF POSTS

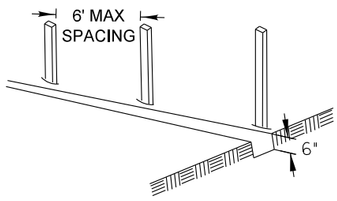

2. ATTACH GEOTEXTILE FILTER FABRIC TO EACH POST WITH A MINIMUM OF 3 (THREE) FASTENERS PER POST AND EXTEND FABRIC TO THE BOTTOM OF THE TRENCH

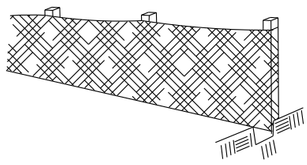

3. BACKFILL AND COMPACT THE EXCAVATED MATERIALS

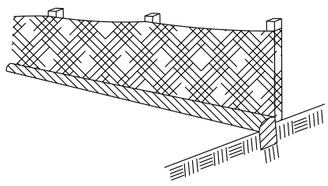

Requirements	Test Methods	Wire Backed Supported Silt Fence [a]	Unsupported Silt Fence: Geotextile Elongation >=50% [b]	Unsupported Silt Fence: Geotextile Elongation <50% [b]
Maximum Post Spacing		4 feet	4 feet	6 feet
Grab Strength	ASTM D 4632			
Machine direction		90 lbs	124 lbs	124 lbs
X-Machine direction		90 lbs	100 lbs	100lbs
Permittivity [c]	ASTM D 4491	0.05 sec^{-1}	0.05 sec^{-1}	0.05 sec^{-1}
Apparent Opening Size	ASTM D 4751	0.024in maximum average roll value		
Ultraviolet stability (retained strength)	ASTM D 4355	70% after 500 hours of exposure		

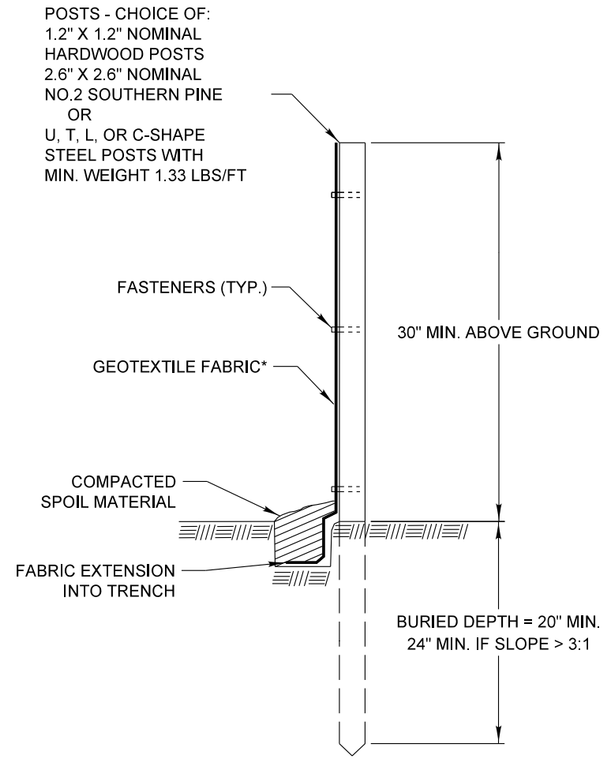

* NOTE: OPTIONAL WIRE SUPPORT
- MIN. 30" HEIGHT
- MIN. 14 GAUGE WIRE
- MIN. 6 HORIZ. WIRES
- MIN. 6" VERTICAL SPACING

SCALE 1" = 1'

REVISIONS	DATE
ORIG. by LCSMC	4/21/08
Update Text	7/15/11

LakeCounty Division of Transportation

APPROVED BY: M. G. ZEMAITIS
DATE: JUNE 20, 2008

PERIMETER EROSION BARRIER INSTALLATION

LC2051

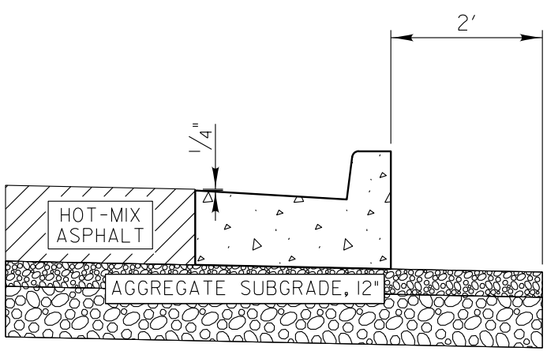

TYPICAL METHOD

NOTE:

MINIMUM FLAG THICKNESS 9"

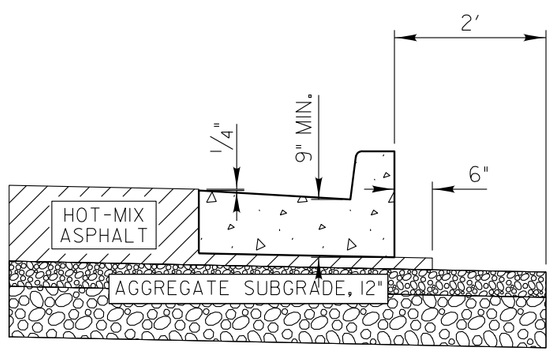

OPTIONAL METHOD

NOTE:
COST OF HOT-MIX ASPHALT MATERIAL UNDER CURB AND 6" OUTSIDE OF CURB TO BE INCIDENTAL TO COST OF COMBINATION CONCRETE CURB AND GUTTER.

SCALE: 1" = 2'

REVISIONS	DATE

LakeCounty Division of Transportation

APPROVED BY: M. G. ZEMAITIS
DATE: APRIL 1, 2007

CURB & GUTTER SUBGRADE OPTIONS

LC3000

NO.	REVISIONS / REMARKS DESCRIPTION	DATE	BY	SURVEYOR: DSGNR/LIAISON: PLOTTED BY:
		/ /		
				HD8514 3/9/206

FILE NAME: U:\Design\Streets\15-00999-18-RS 21st Street Resurfacing (31st to Kenosha Rd)\Details\B-00999Sheet1.007G-LC.Details.dgn

21ST ST / KENOSHA RD / WADSWORTH RD

LakeCounty Division of Transportation

LAKE COUNTY DETAILS
21ST ST / KENOSHA RD / WADSWORTH RD

ROUTE	SECTION	SECTION NUMBER	SHEET	SHEETS
CH17 CH53 CH67	55 125 146	15-00999-18-RS	76	128

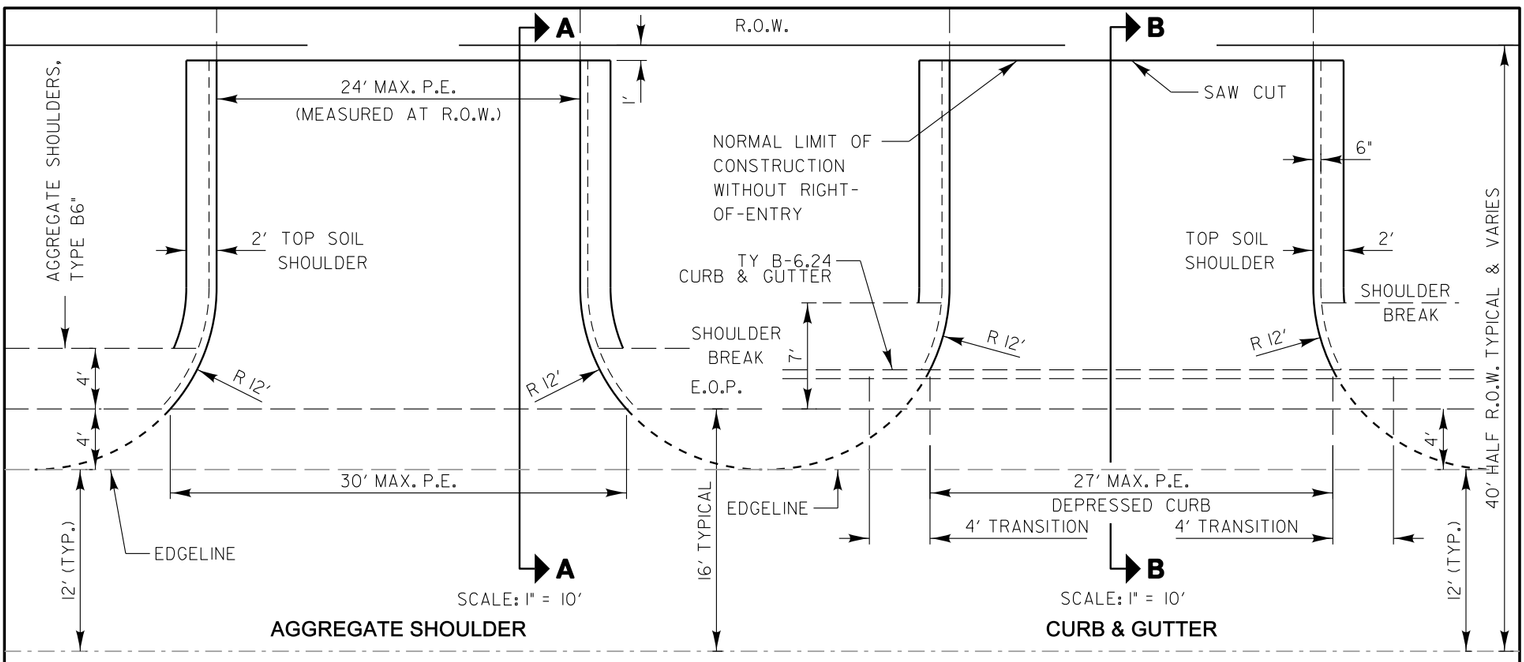

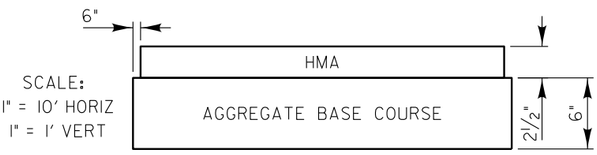

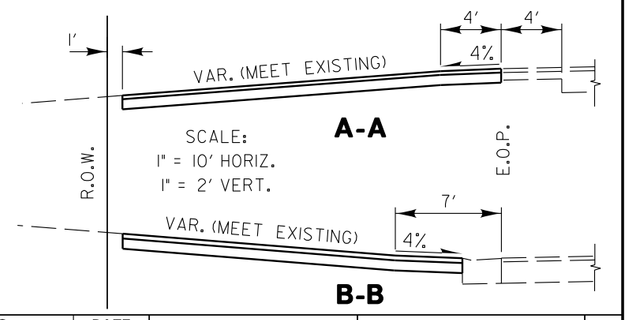

PEs: 2 1/2 " HOT-MIX ASPHALT SURFACE COURSE on 6" AGGREGATE BASE COURSE, TYPE B

Calculated Quantities for PRIVATE ENTRANCE w/o Curb and Gutter:

1. HMA Surface Course Weight Used = 112 lbs/Sq Yd/Inch thickness
   Area = 63.0 Sq Yd
   63.0 Sq Yd X 112 lb/Sq Yd/Inch x 2.5 Inches = **9 Ton**
2. Aggregate Base Course Weight Used = 2 Ton/Cu Yd
   65.7 Sq Yd x 2 Ton/Cu Yd x 6 Inch thickness = **22 Ton**

Calculated Quantities for PRIVATE ENTRANCE with Curb and Gutter:

1. HMA Surface Course Weight Used = 112 lbs/Sq Yd/Inch thickness
   Area = 55.0 Sq Yd
   55.0 Sq Yd X 112 lb/Sq Yd/Inch x 2.5 Inches = **8 Ton**
2. Aggregate Base Course Weight Used = 2 Ton/Cu Yd
   57.2 Sq Yd x 2 Ton/Cu Yd x 6 Inch thickness = **19 Ton**

REVISIONS	DATE
Removed Prime Coat Qty	5/20/08
Revised Ent. EOP Radius	6/4/10
Revised Type A to Type B Aggregate	12/20/12
Revised Curb Transition	1/7/15

LakeCounty Division of Transportation

APPROVED BY: M. G. ZEMAITIS
DATE: APRIL 1, 2007

TYPICAL MINOR ACCESS (PRIVATE ENTRANCE)

LC4100

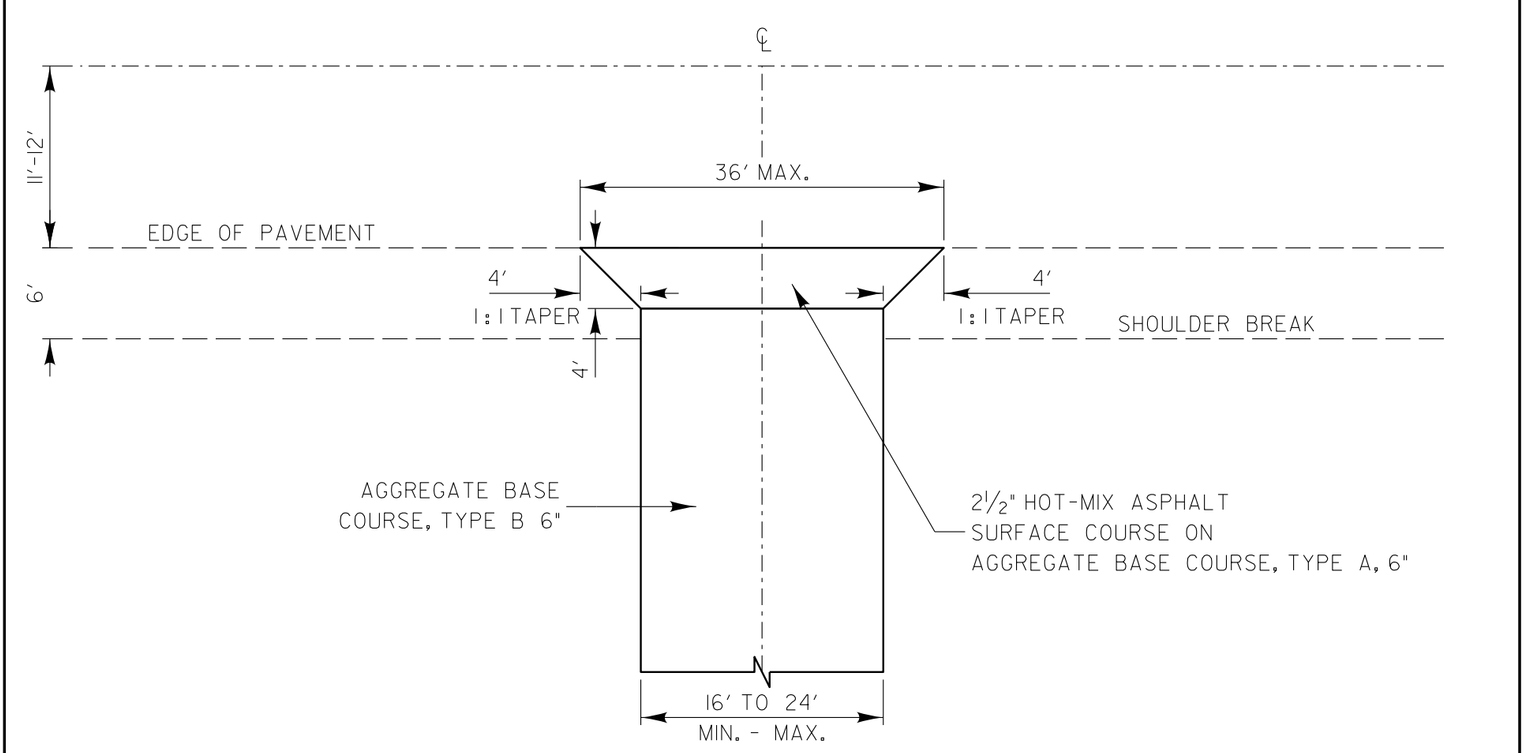

DESIGN NOTE:

The Hot-Mix Asphalt apron will not be included on roads with a 2' (or wider) paved shoulder. The apron will be constructed behind curb & gutter only when a hot-mix asphalt shoulder is not included.

SCALE: 1" = 10'

REVISIONS	DATE
Revised Type A to Type B Aggregate	12/20/12

LakeCounty Division of Transportation

APPROVED BY: M. G. ZEMAITIS
DATE: APRIL 1, 2007

HOT-MIX ASPHALT APRON FOR AGGREGATE FIELD ENTRANCE

LC4103

NO.	REVISIONS / REMARKS DESCRIPTION	DATE	BY
		/ /	SURVEYOR: DSGNR/LIAISON: PLOTTED BY:
			WD8514 3/9/2016

21ST ST / KENOSHA RD / WADSWORTH RD

LakeCounty Division of Transportation

LAKE COUNTY DETAILS

21ST ST / KENOSHA RD / WADSWORTH RD

ROUTE	SECTION	SECTION NUMBER	SHEET	SHEETS
CH17 CH53 CH67	55 125 146	15-00999-18-RS	77	128

FILE NAME: U:\Design\Streets\15-00999-18-RS 21st Street Resurfacing (31st to Kenosha Rd)\Details\B-00999Sheet1.0071-LC.Details.dgn

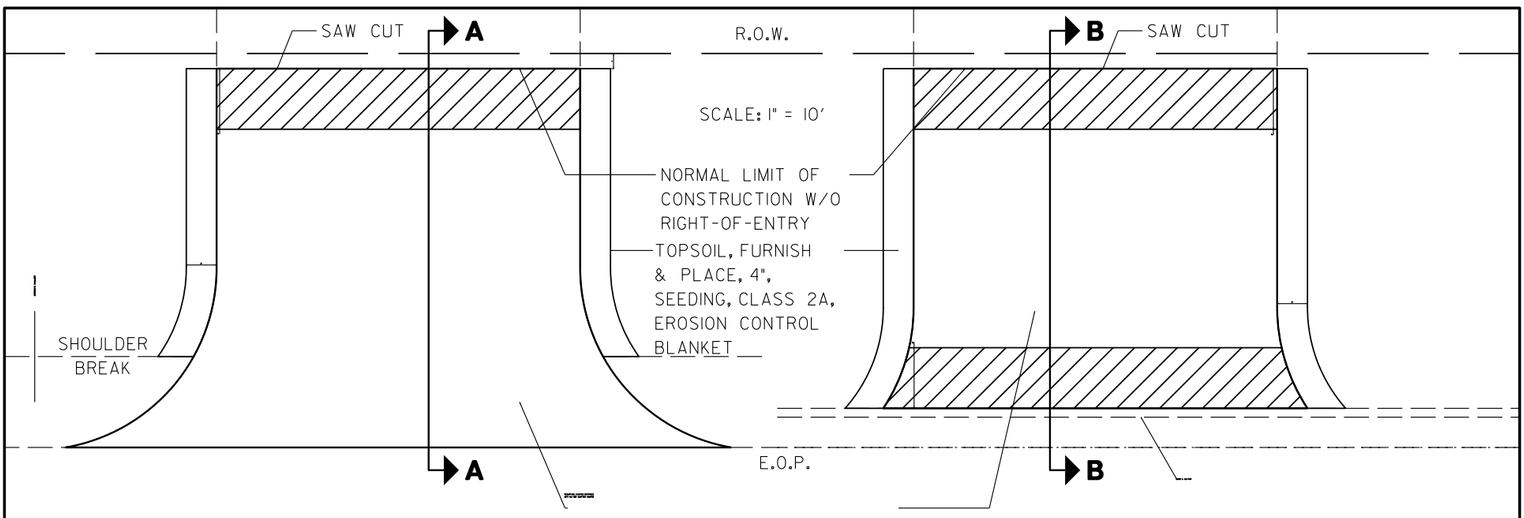

ENTRANCE WITH AGGREGATE SHOULDER

ENTRANCE WITH CURB & GUTTER

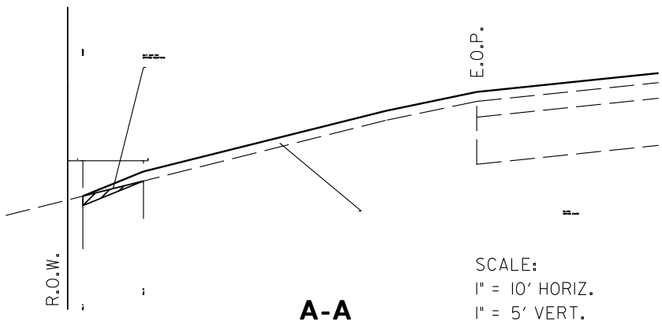

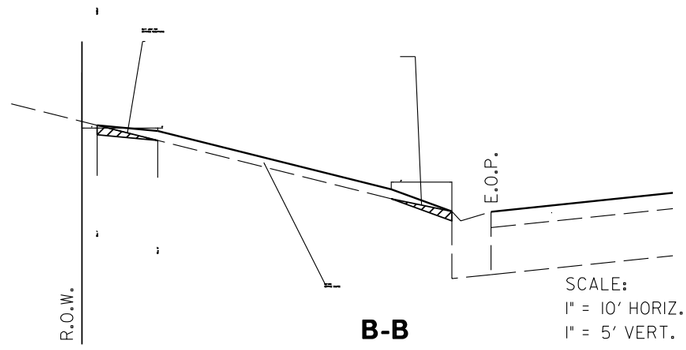

ESTIMATED QUANTITIES (BASED ON 75 SQ YD PER ENTRANCE)	AGGREGATE SHOULDER	CURB & GUTTER
HMA SURFACE COURSE @ 1½"	7 TON	7 TON
BUTT JOINT FOR ENTRANCE RESURFACING	20 FT	45 FT
TOPSOIL, FURNISH & PLACE, 4" SEEDING, CLASS 2A, EROSION CONTROL BLANKET	10 SQ YD	10 SQ YD
BITUMINOUS MATERIALS (PRIME COAT)	12 GAL	12 GAL

REVISIONS	DATE

LakeCounty Division of Transportation

APPROVED BY: M. G. ZEMAITIS
DATE: APRIL 1, 2007

TYPICAL MINOR ACCESS TREATMENT ON RESURFACING PROJECTS

LC4110

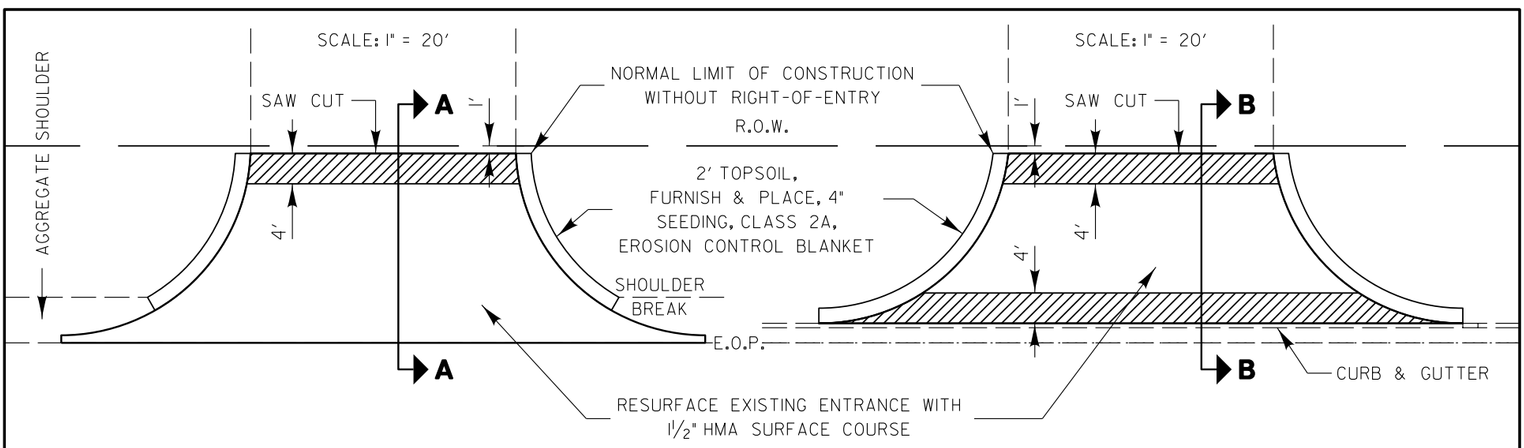

ENTRANCE WITH AGGREGATE SHOULDER

ENTRANCE WITH CURB & GUTTER

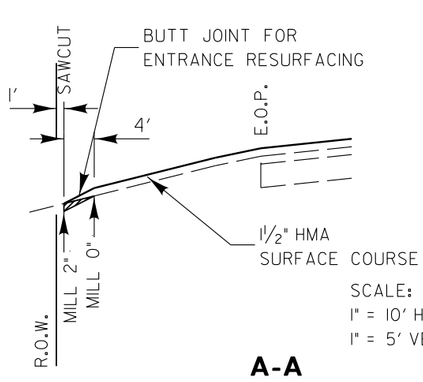

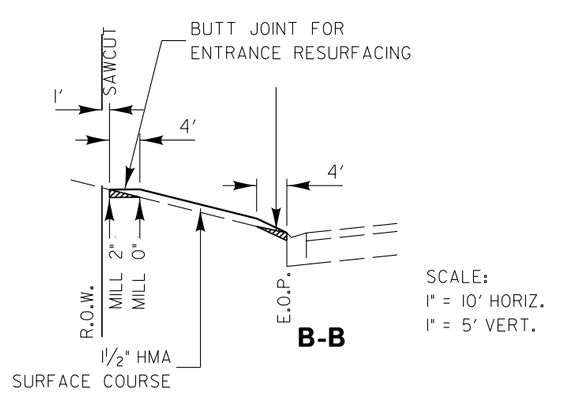

ESTIMATED QUANTITIES (BASED ON 115 SQ YD PER ENTRANCE)	AGGREGATE SHOULDER	CURB & GUTTER
HMA SURFACE COURSE @ 1½"	10 TON	10 TON
BUTT JOINT FOR ENTRANCE RESURFACING	30 FT	70 FT
TOPSOIL, FURNISH & PLACE, 4" SEEDING, CLASS 2A, EROSION CONTROL BLANKET	15 SQ YD	15 SQ YD
BITUMINOUS MATERIALS (PRIME COAT)	18 GAL	18 GAL

REVISIONS	DATE

LakeCounty Division of Transportation

APPROVED BY: M. G. ZEMAITIS
DATE: APRIL 1, 2007

TYPICAL MAJOR ACCESS TREATMENT ON RESURFACING PROJECTS

LC4111

NO.	REVISIONS / REMARKS DESCRIPTION	DATE	BY
		/ /	SURVEYOR: DSGNR/LIAISON: PLOTTED BY:
		/	HD8514 3/9/206

21ST ST / KENOSHA RD / WADSWORTH RD

LakeCounty Division of Transportation

LAKE COUNTY DETAILS

21ST ST / KENOSHA RD / WADSWORTH RD

ROUTE	SECTION	SECTION NUMBER	SHEET	SHEETS
CH17 CH53 CH67	55 125 146	15-00999-18-RS	78	128

FILE NAME: U:\Design\Streets\15-00999-18-RS 21st Street Resurfacing 131st to Kenosha Rd\Details\B-00999Sheet1.0078.LC.Details.dgn

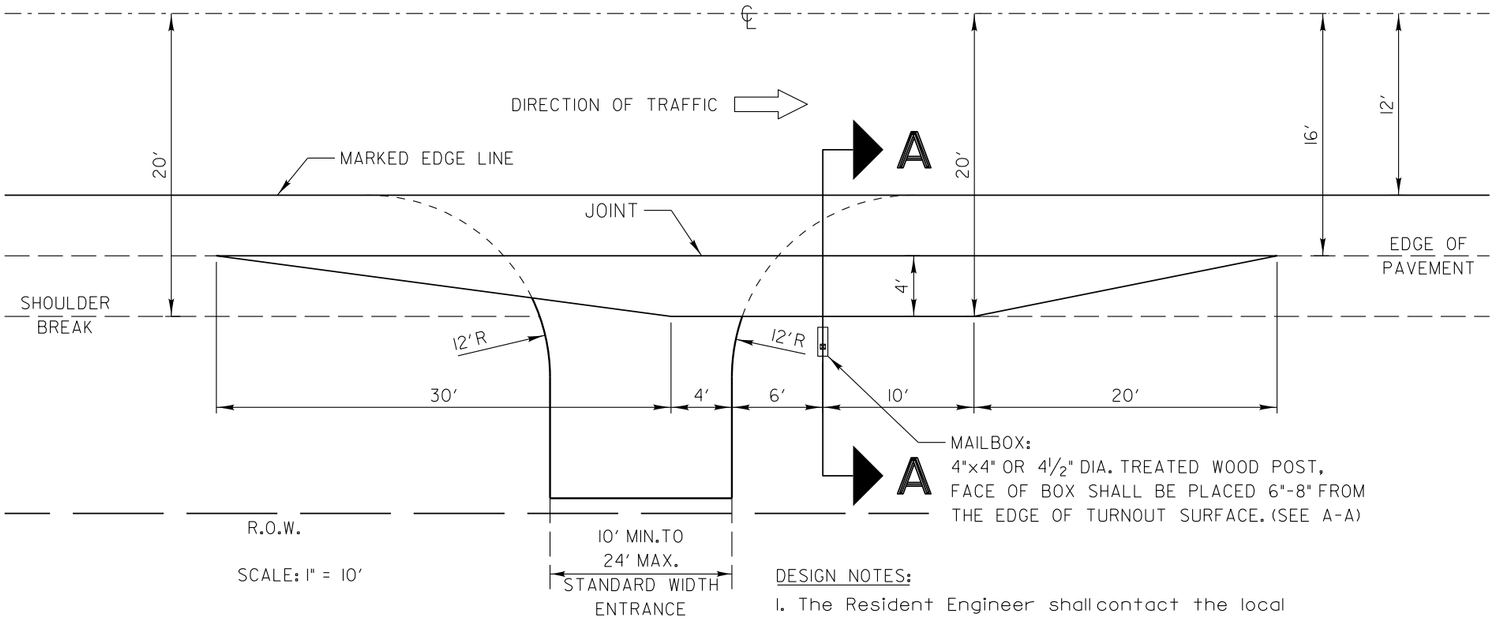

SCALE: 1" = 10'

DESIGN NOTES:

1. The Resident Engineer shall contact the local postmaster prior to installing the new mailbox posts for the local mounting height of the mailbox. The standard mounting height is 3½'; however, local post- masters may vary this height.
2. The standard mailbox post is a 4"x4" or a 4½" dia. treated wood post. The standard bury length of the post is 2'. Do not shorten or exceed this bury length.
3. Depending on the location of the shoulder break with respect to the edge of the mailbox turnout the overall post length may vary from 5' 8" to 6' 4" to maintain the 2' bury length and the 3½' mounting height.

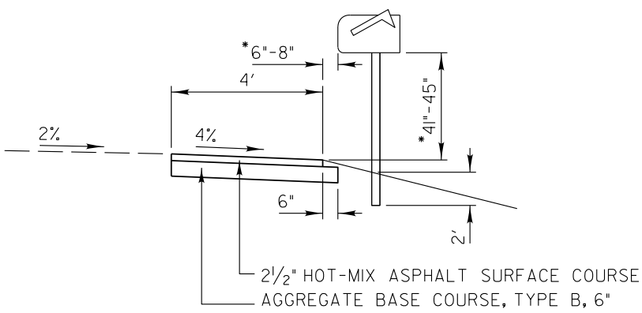

SECTION A-A

SCALE: 1" = 5'

* USPS RESIDENTIAL MAILBOX STANDARD

REVISIONS	DATE
4' PAVED SHOULDER ADDED	9/21/10
6"-8" BOX OFFSET ADDED	12/22/11
Revised Type A to Type B Aggregate	12/20/12

LakeCounty Division of Transportation

APPROVED BY: M. G. ZEMAITIS
DATE: APRIL 1, 2007

MAILBOX TURNOUT ALONG UNCURBED ROADS

LC4120

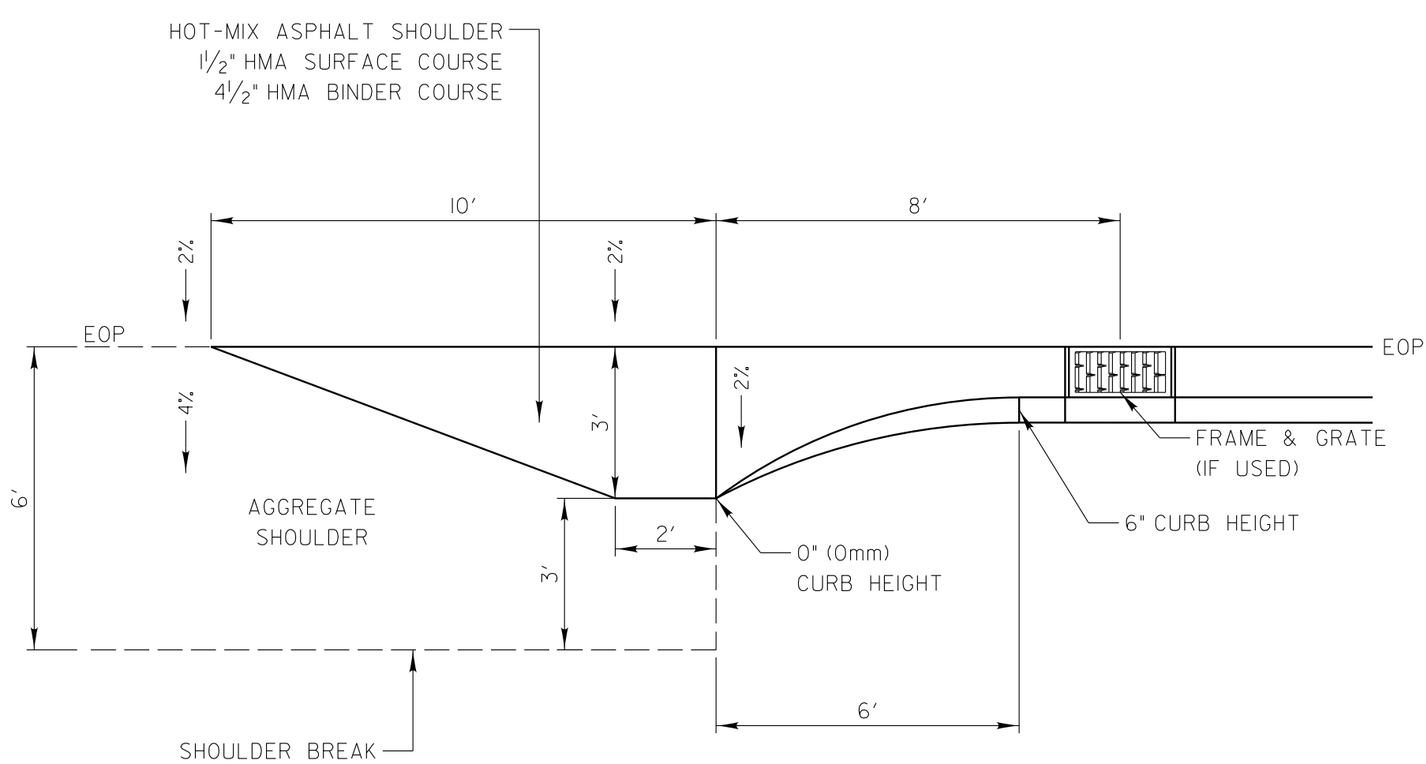

SCALE: 1" = 3'

REVISIONS	DATE

LakeCounty Division of Transportation

APPROVED BY: M. G. ZEMAITIS
DATE: APRIL 1, 2007

TRANSITION FROM AGGREGATE SHOULDER TO B-6.12

LC4810

NO.	REVISIONS / REMARKS DESCRIPTION	DATE	BY	SURVEYOR: DSGNR/LIAISON: PLOTTED BY:
		/ /		
				WD8574 3/9/206

21ST ST / KENOSHA RD / WADSWORTH RD

LakeCounty Division of Transportation

LAKE COUNTY DETAILS

21ST ST / KENOSHA RD / WADSWORTH RD

ROUTE	SECTION	SECTION NUMBER	SHEET	SHEETS
CH17 CH53 CH67	55 125 146	15-00999-18-RS	79	128

FILE NAME: U:\Design\Streets\15-00999-18-RS 21st Street Resurfacing (31st to Kenosha Rd)\Details\B-00999Sheet1_0079_LC_Details.dgn

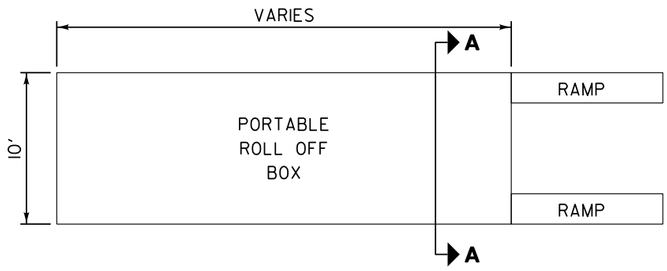

PLAN VIEW

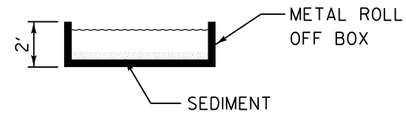

SECTION A-A

PREFAB PORTABLE WASHOUT

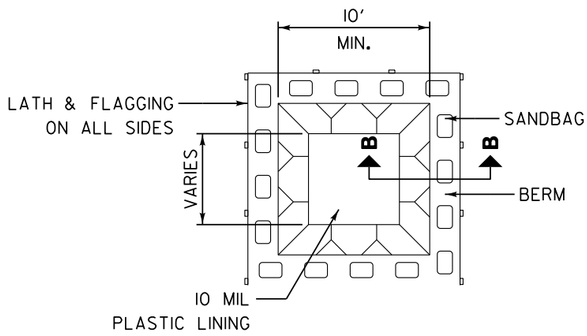

PLAN VIEW

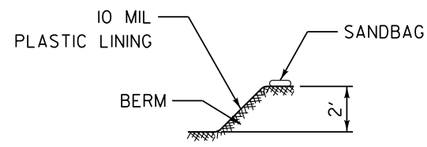

SECTION B-B

BELOW GRADE

NOTES:

1. ACTUAL LAYOUT DETERMINED IN FIELD.
2. OTHER WASHOUT DESIGNS MAY BE USED IF APPROVED BY THE ENGINEER.
3. THE CONCRETE WASHOUT SIGN SHALL BE INSTALLED WITHIN 30 FEET OF THE TEMPORARY CONCRETE WASHOUT FACILITY.

NOT TO SCALE

REVISIONS	DATE

LakeCounty Division of Transportation

APPROVED BY: MGZ
DATE: March 17, 2008

CONCRETE WASHOUT FACILITIES

SHEET 1 OF 2

LC4202

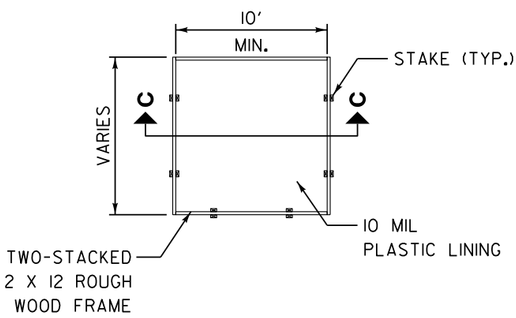

PLAN VIEW

ABOVE GRADE

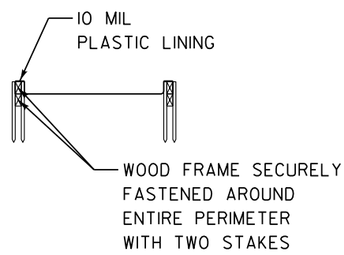

SECTION C-C

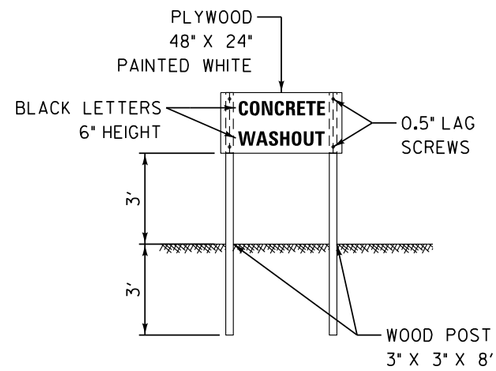

CONCRETE WASHOUT SIGN DETAIL (OR EQUIVALENT)

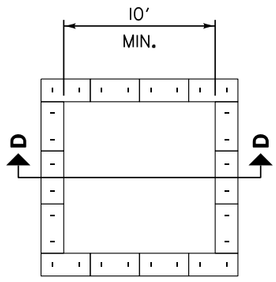

PLAN VIEW

ABOVE GRADE WITH STRAW BALES

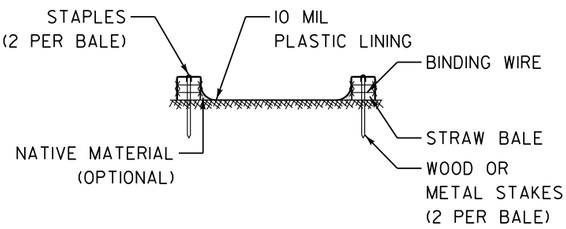

SECTION D-D

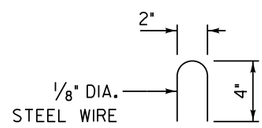

STAPLE DETAIL

NOTES:

1. ACTUAL LAYOUT DETERMINED IN FIELD.
2. OTHER WASHOUT DESIGNS MAY BE USED IF APPROVED BY THE ENGINEER.
3. THE CONCRETE WASHOUT SIGN SHALL BE INSTALLED WITHIN 30 FEET OF THE TEMPORARY CONCRETE WASHOUT FACILITY.

NOT TO SCALE

REVISIONS	DATE

LakeCounty Division of Transportation

APPROVED BY: MGZ
DATE: March 17, 2008

CONCRETE WASHOUT FACILITIES

SHEET 2 OF 2

LC4202

NO.	REVISIONS / REMARKS DESCRIPTION	DATE	BY	SURVEYOR: DSGNR/LIAISON: PLOTTED BY:	/
		/ /			
				HD8514 3/9/2006	

FILE NAME: U:\Design\Structs\15-00999-18-RS 21st Street Resurfacing Kenosha Rd\Details\B-00999Sheet1.0080.LC.Details.dgn

21ST ST / KENOSHA RD / WADSWORTH RD

LakeCounty Division of Transportation

LAKE COUNTY DETAILS

21ST ST / KENOSHA RD / WADSWORTH RD

ROUTE	SECTION	SECTION NUMBER	SHEET	SHEETS
CH17 CH53 CH67	55 125 146	15-00999-18-RS	80	128

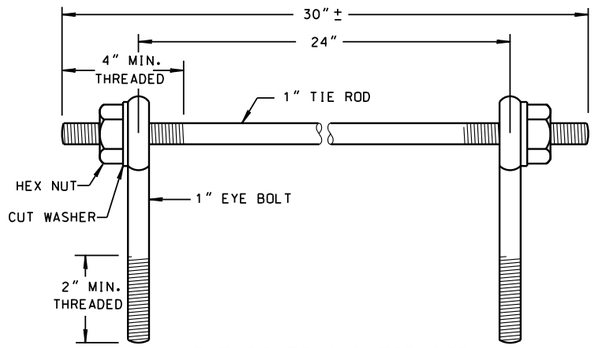

EYE BOLTS AND TIE ROD

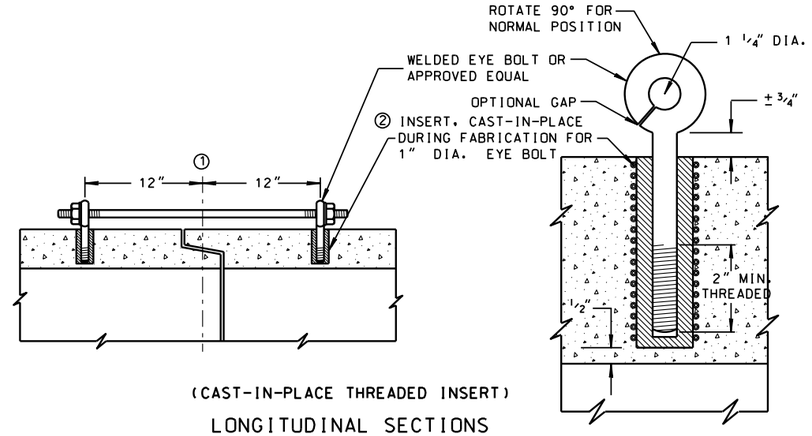

(CAST-IN-PLACE THREADED INSERT)

LONGITUDINAL SECTIONS

EYE BOLT AND TIE ROD ASSEMBLY (ALTERNATE NO. 1)

GENERAL NOTES

DETAILS OF CONSTRUCTION, MATERIALS AND WORKMANSHIP NOT SHOWN ON THIS DRAWING SHALL CONFORM TO THE PERTINENT REQUIREMENTS OF THE STANDARD SPECIFICATIONS AND APPLICABLE SPECIAL PROVISIONS. JOINT TIES AND HARDWARE SHALL BE GALVANIZED STEEL.

CONCRETE CULVERT PIPE AND SEWER PIPE SHALL BE TIED TOGETHER IN THE MANNER ILLUSTRATED BY THIS DETAIL AT THE LAST THREE JOINTS BEFORE A FLARED END SECTION

THE CONTRACTOR MAY USE EITHER ALTERNATE 1, 2 OR 3 FOR CONCRETE PIPE.

UNLESS OTHERWISE STATED IN THE CONTRACT THE MATERIALS, FABRICATION AND WORK NECESSARY TO TIE CULVERT PIPE AS INDICTED ON THE PLANS AND BY THIS DETAIL WILL BE CONSIDERED INCLUDED IN THE COST OF PIPE CULVERTS OR STORM SEWERS.

DETAILED DRAWINGS FOR PROPOSED ALTERNATE DESIGNS FOR GALVANIZED STEEL JOINT TIES SHALL BE SUBMITTED TO THE ENGINEER FOR APPROVAL.

① ℄ OF TONGUE AND GROOVE OR BELL AND SPIGOT JOINTS.

② THE INSIDE OF THE THREADED INSERTS SHALL BE CLEAN TO ALLOW THE INSERTION OF THREADED EYE BOLTS.

③ HOLES SHALL BE CAST-IN-PLACE OR DRILLED 12" FROM ℄ OF TONGUE AND GROOVE.

④ BOLT PROJECTION INSIDE OF PIPE SHALL NOT EXCEED 2".

⑤ OPENING TO BE ROD DIAMETER + 1 INCH.

⑥ LENGTH ADEQUATE TO EXTEND TO WITHIN 1/2 INCH OF THE INNER SURFACE OF THE PIPE.

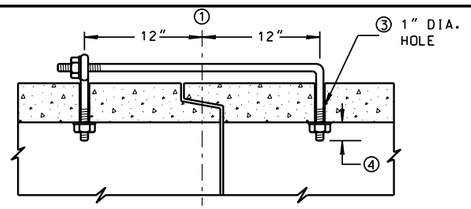

(TONGUE & GROOVE PIPE)

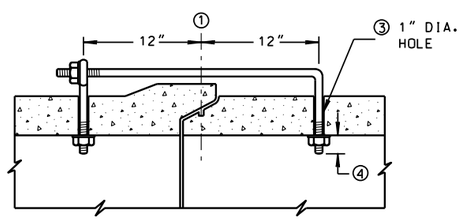

(MODIFIED BELL PIPE)

LONGITUDINAL SECTION

EYE BOLT DIMENSION TABLE

PIPE SIZE	L = LENGTH	
	TONGUE & GROOVE PIPE	MODIFIED BELL PIPE
18" TO 24"	4 1/2"	6 1/4"
30"	5"	7"
36"	5 1/2"	7"
42"	6"	
48"	6 1/2"	
60"	7 1/2"	
66"	8"	

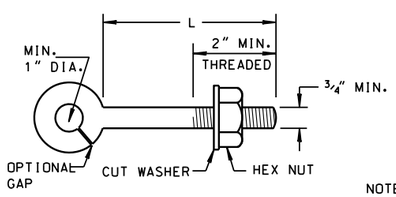

EYE BOLT

NOTE:
TWO EYE BOLTS MAY BE USED WITH A 30" LONG THREADED ROD IN LIEU OF THE 90° BENT TIE ROD.

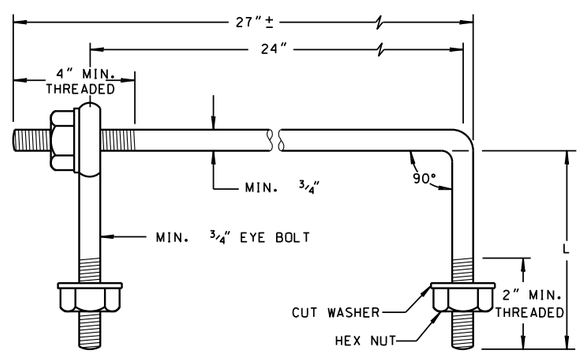

EYE BOLT AND TIE ROD

(JOINT TIES FOR 18" TO 66" DIA. CONCRETE PIPE)

EYE BOLT AND TIE ROD ASSEMBLY (ALTERNATE NO. 2)

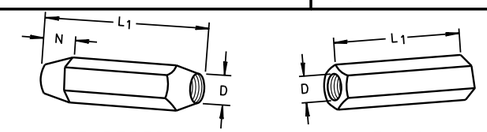

TAPERED PLAIN

RIGHT AND LEFT THREADS

SLEEVE NUTS

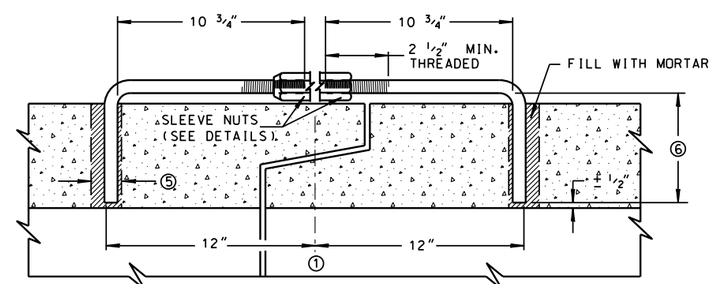

LONGITUDINAL SECTION

(JOINT TIES FOR 12" TO 108" DIA. CONCRETE PIPE)

ADJUSTABLE TIE ROD (ALTERNATE NO. 3)

ADJUSTABLE TIE ROD TABLE

PIPE DIAMETER	TIE ROD DIAMETER	D	L_1	N
12-60	5/8	5/8	5	1/2
66-84	3/4	3/4	5	1/2
90-108	1	1	7	1 7/16

DIMENSIONS SHOWN ARE IN INCHES

NOT TO SCALE

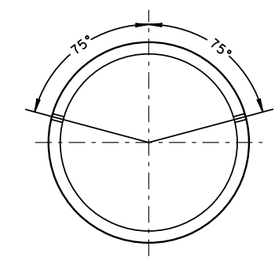

PLACEMENT OF (2) CAST-IN-PLACE INSERTS OR HOLES DURING FABRICATION FOR PIPE SECTIONS REQUIRING TIE RODS

TRANSVERSE SECTION

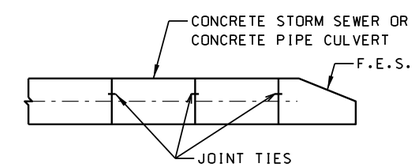

TYPICAL JOINT TIE LOCATIONS

REVISIONS	DATE
ADDED JOINT TIE MAT'L	7/8/11

LakeCounty Division of Transportation

APPROVED BY: M. ZEMAITIS
DATE: 04/01/11

JOINT TIES FOR CONCRETE PIPE

LC5402

REVISIONS / REMARKS					
NO.	DESCRIPTION	DATE	BY	SURVEYOR:	/
		/ /		DSGNR/LIAISON:	
		/ /		PLOTTED BY:	HDI8574 3/9/2016

21ST ST / KENOSHA RD / WADSWORTH RD

LakeCounty Division of Transportation

LAKE COUNTY DETAILS

21ST ST / KENOSHA RD / WADSWORTH RD

ROUTE	SECTION	SECTION NUMBER	SHEET	SHEETS
CH17 CH53 CH67	55 125 146	15-00999-18-RS	81	128

FILE NAME: U:\Design\Shrestha\15-00999-18-RS 21st Street Resurfacing (131 to Kenosha Rd)\Details\B-00999$Sheet_008_LC_Details.dgn

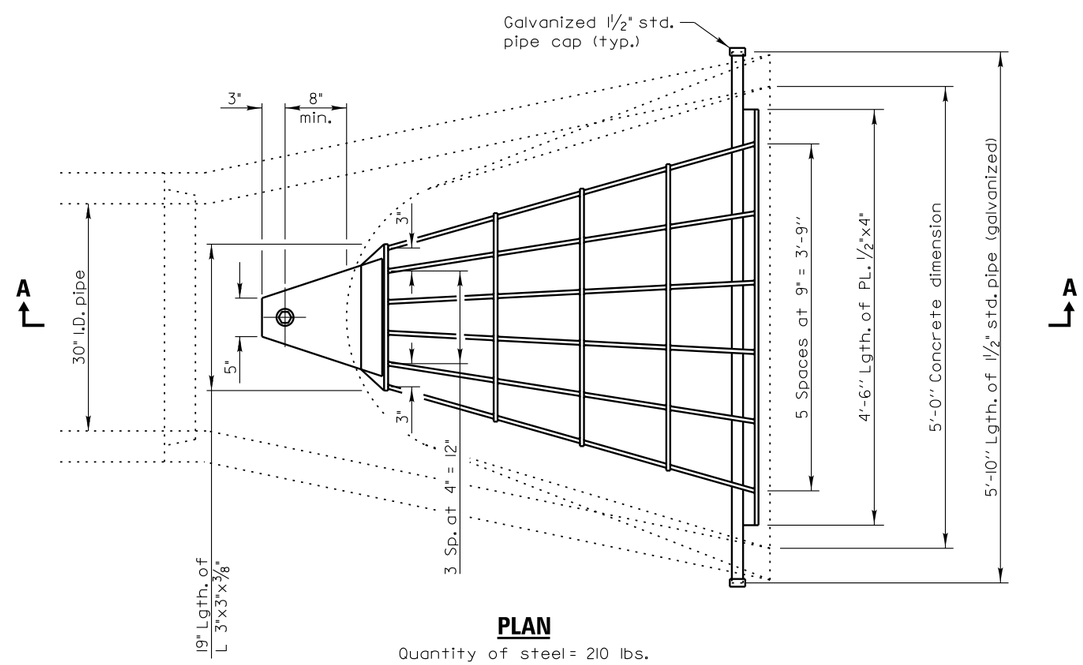

PLAN

Quantity of steel = 210 lbs.

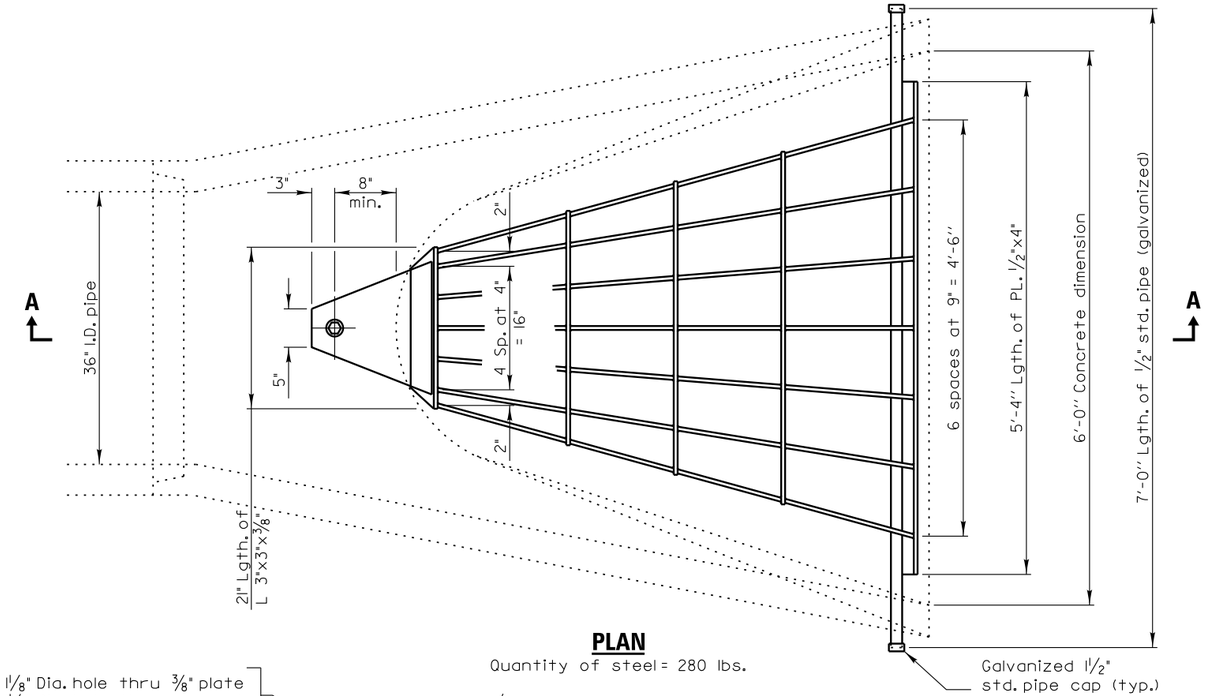

PLAN

Quantity of steel = 280 lbs.

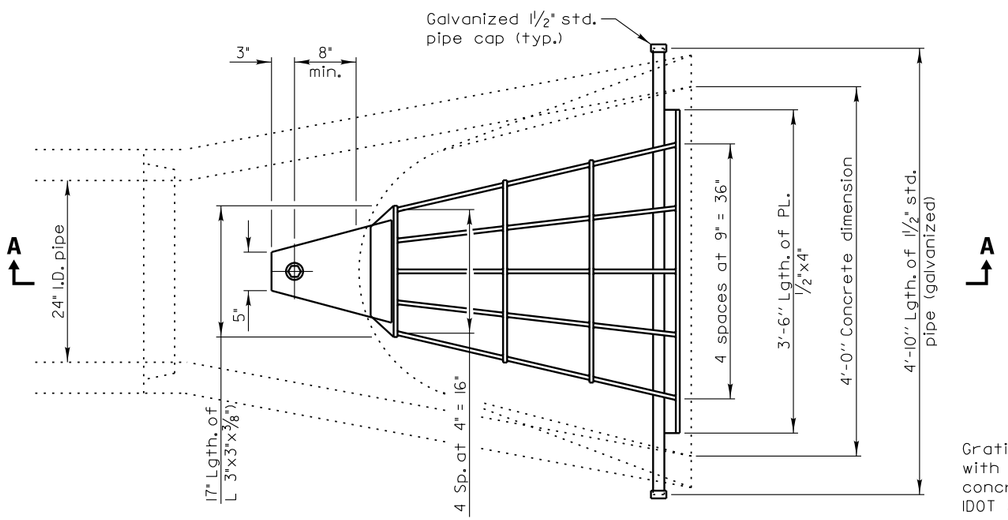

PLAN

Quantity of steel = 150 lbs.

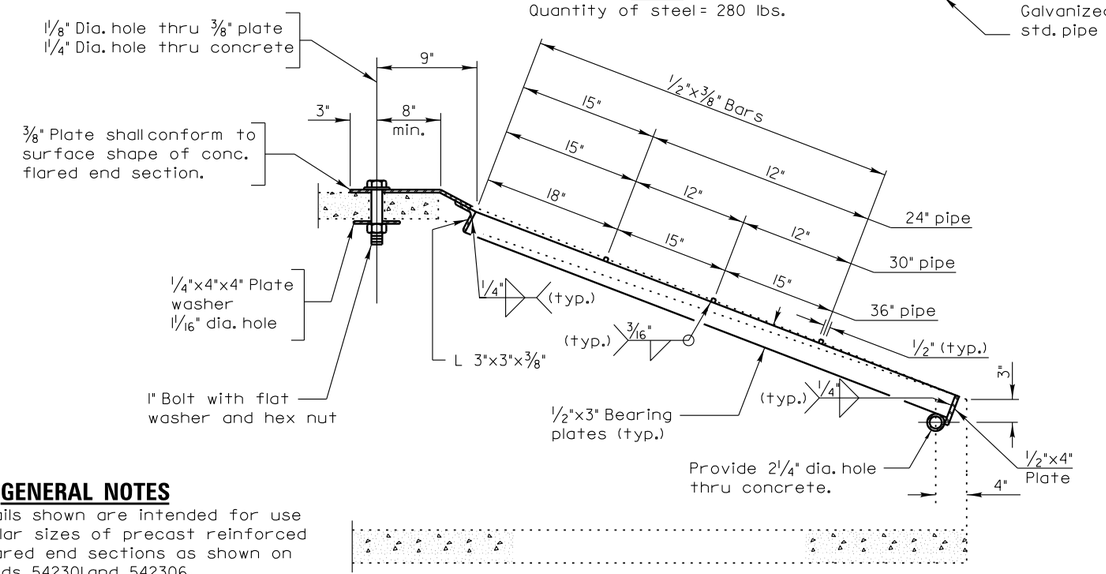

SECTION A–A

GENERAL NOTES

Grating details shown are intended for use with particular sizes of precast reinforced concrete flared end sections as shown on IDOT standards 542301 and 542306.

Approximate quantity of steel shown includes total quantity of grating, bolts, nuts, washers and steel pipe.

Holes in the precast concrete flared end sections shall be cored to the diameters noted. If cone-out on the other end of the hole occurs, the hole shall be filled with grout to correct the diameter of the hole.

REVISIONS	DATE

LakeCounty Division of Transportation

APPROVED BY: M. G. ZEMAITIS
DATE: DEC. 18, 2014

GRATING FOR CONCRETE FLARED END SECTIONS (24"-54")

SHEET 1 OF 2

LC5403

REVISIONS / REMARKS					
NO.	DESCRIPTION	DATE	BY	SURVEYOR:	/
		/ /		DSGNR/LIAISON:	
		/ /		PLOTTED BY:	HDI8574 3/9/2016

21ST ST / KENOSHA RD / WADSWORTH RD

LakeCounty Division of Transportation

LAKE COUNTY DETAILS

21ST ST / KENOSHA RD / WADSWORTH RD

ROUTE	SECTION	SECTION NUMBER	SHEET	SHEETS
CH17 CH53 CH67	55 125 146	15-00999-18-RS	82	128

FILE NAME: U:\Design\Shrestha\15-00999-18-RS 21st Street Resurfacing (131 to Kenosha Rd)\Details\B-00999$Sheet_0082_LC_Details.dgn

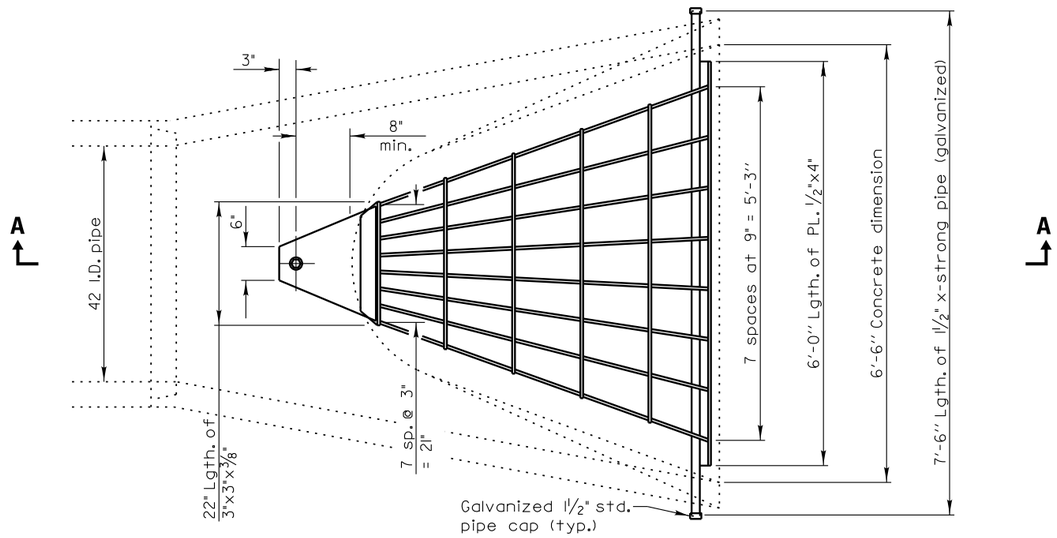

PLAN

Quantity of steel = 320 lbs.

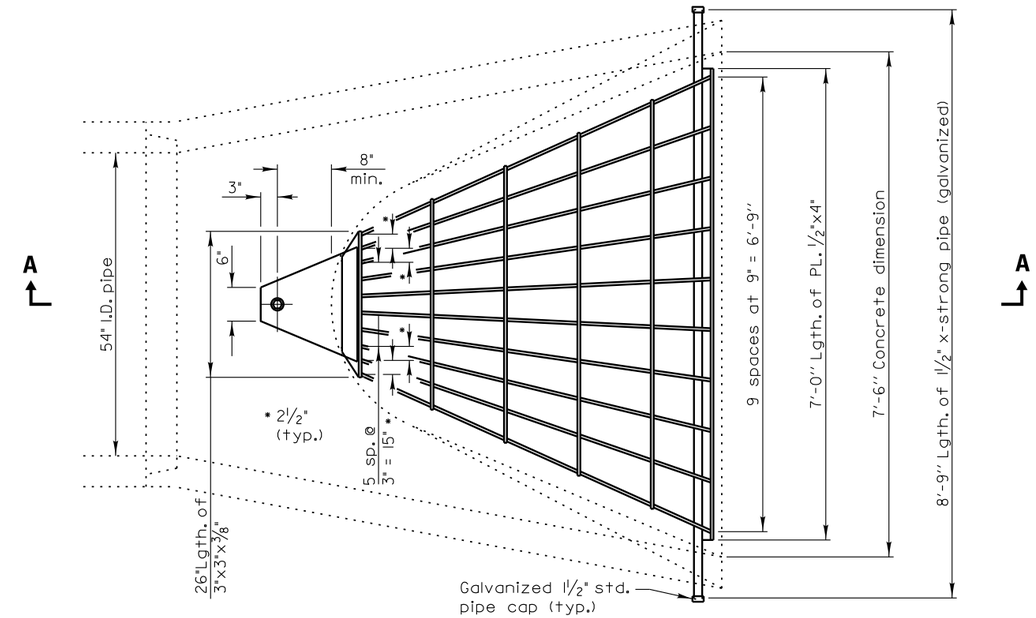

PLAN

Quantity of steel = 425 lbs.

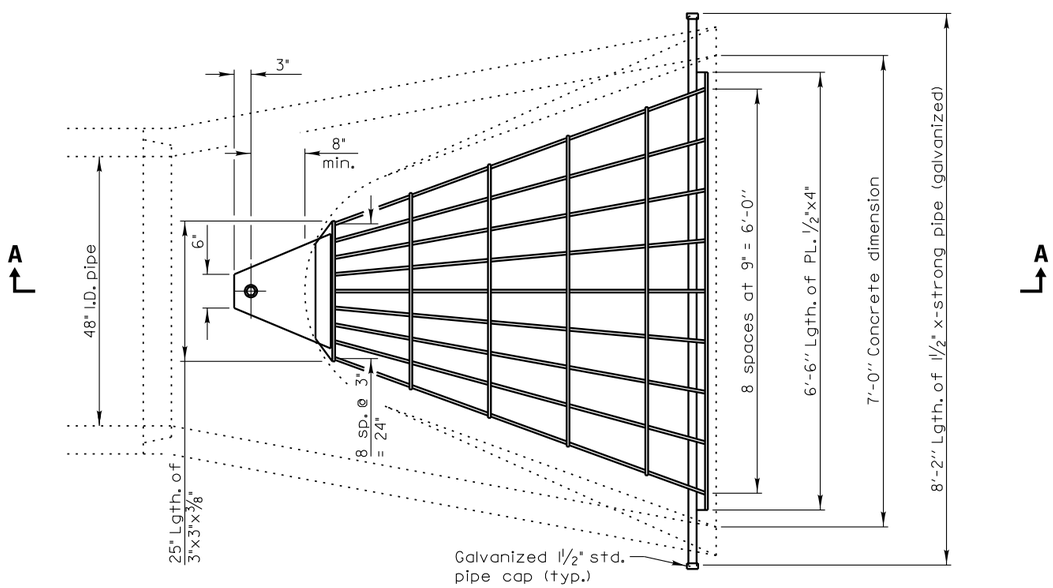

PLAN

Quantity of steel = 400 lbs.

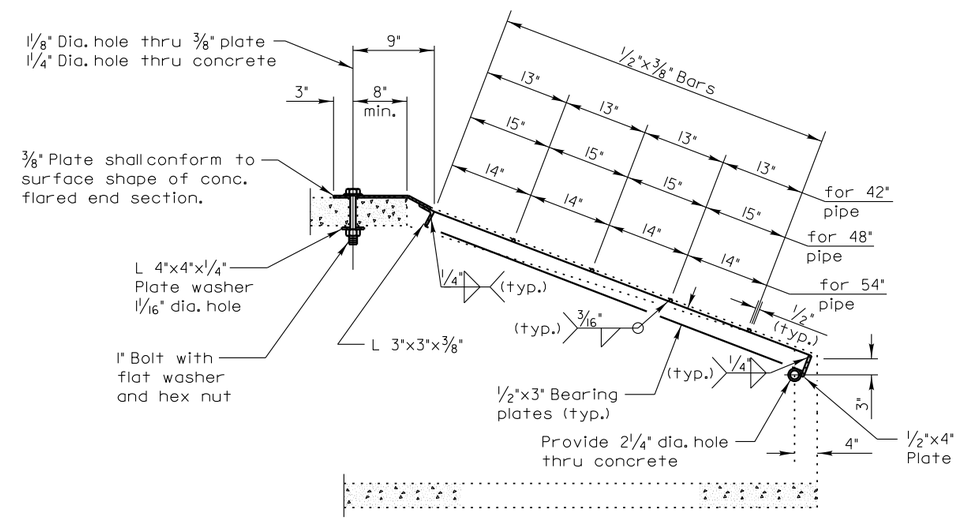

SECTION A–A

REVISIONS	DATE

LakeCounty Division of Transportation

APPROVED BY: M. G. ZEMAITIS
DATE: DEC. 18, 2014

GRATING FOR CONCRETE FLARED END SECTIONS (24"-54")

SHEET 2 OF 2

LC5403

REVISIONS / REMARKS					
NO.	DESCRIPTION	DATE	BY	SURVEYOR:	/
		/ /		DSGNR/LIAISON:	
		/ /		PLOTTED BY:	HDI8574 3/9/2016

21ST ST / KENOSHA RD / WADSWORTH RD

LakeCounty Division of Transportation

LAKE COUNTY DETAILS

21ST ST / KENOSHA RD / WADSWORTH RD

ROUTE	SECTION	SECTION NUMBER	SHEET	SHEETS
CH17 CH53 CH67	55 125 146	15-00999-18-RS	83	128

FILE NAME: U:\Design\Shrestha\15-00999-18-RS 21st Street Resurfacing (131 to Kenosha Rd)\Details\B-00999$Sheet_0083_LC_Details.dgn

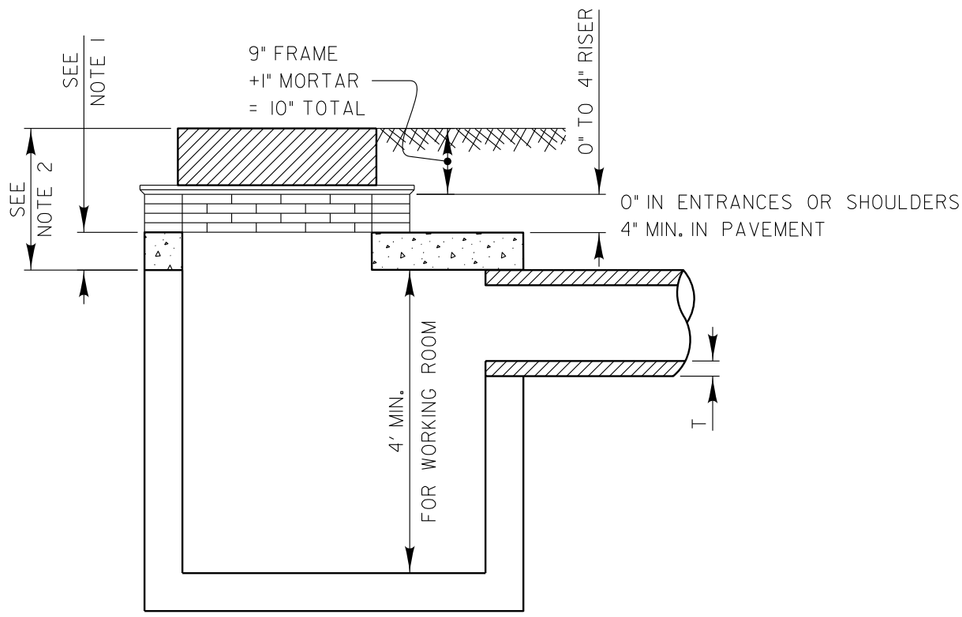

NOTE 1:
6" - 4' DIA. M.H.
8" - 5' DIA. M.H.

NOTE 2:
4' M.H.
1'-8" DESIRABLE
1'-4" MIN.
5' M.H.
1'10" DESIRABLE
1'-6" MIN.

		MINIMUM DEPTH			
		4' DIAMETER		5' DIAMETER	
PIPE DIA.	T	0" RISER	4" RISER	0" RISER	4" RISER
10"	2"	2.33'	2.67'	2.50'	2.83'
12"	2"	2.50'	2.83'	2.67'	3.00'
15"	2 1/4"	2.77'	3.10'	2.94'	3.27'
18"	2 1/2"	3.04'	3.38'	3.21'	3.54'
21"	2 3/4"	—	—	3.48'	3.81'
24"	3"	—	—	3.75'	4.08'
30"	3 1/2"	—	—	4.29'	4.63'
36"	4"	—	—	4.83'	5.17'
42"	4 1/2"	—	—	5.38'	5.71'

STRUCTURES REQUIRE SUMP FOR HEADROOM

SCALE: 1"=2'

REVISIONS	DATE

LakeCounty Division of Transportation

APPROVED BY: M. G. ZEMAITIS
DATE: APRIL 1, 2007

RESTRICTED DEPTH MANHOLE

LC6000

DRAINAGE STRUCTURES (EDGE OF PAVEMENT)

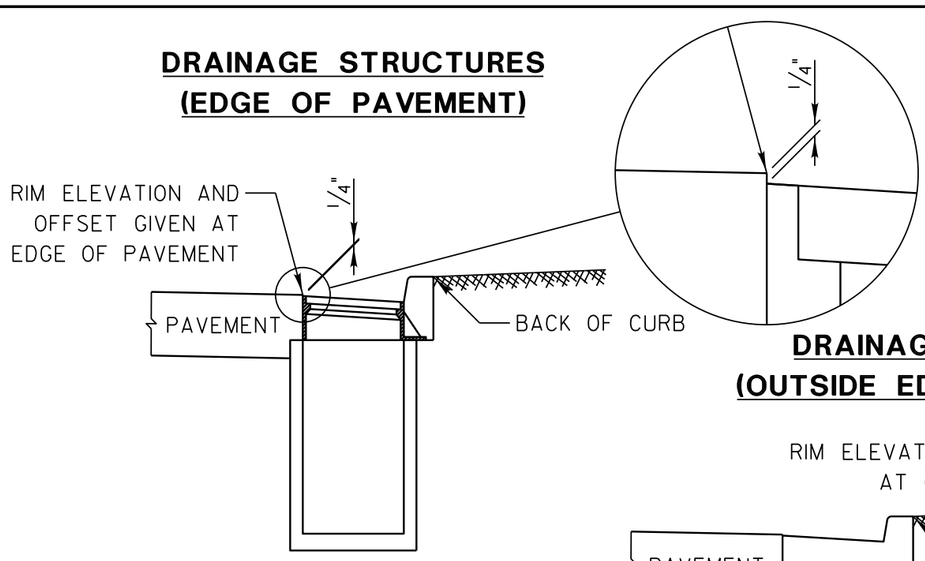

DRAINAGE STRUCTURES (OUTSIDE EDGE OF PAVEMENT)

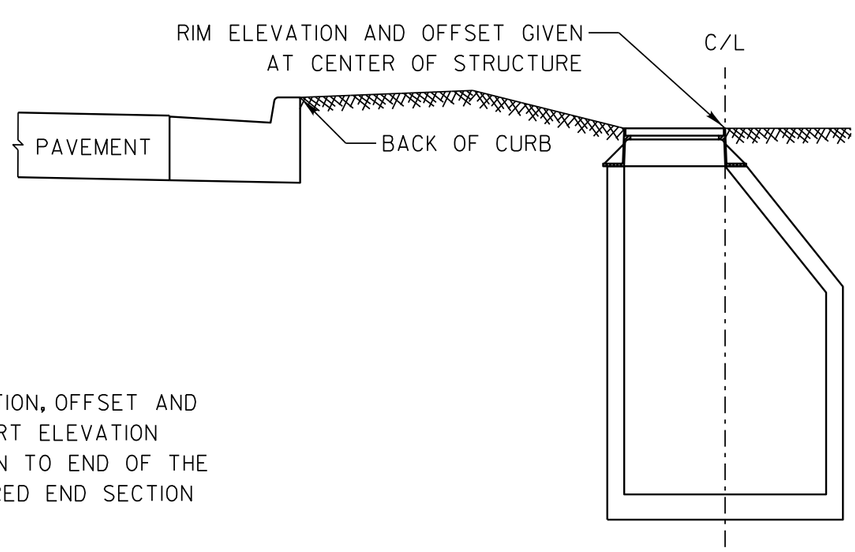

END SECTION

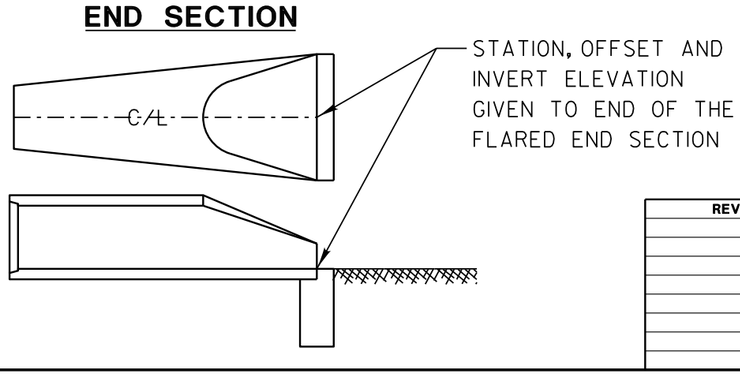

REVISIONS	DATE

LakeCounty Division of Transportation

APPROVED BY: MGZ
DATE: 03/09/2012

DRAINAGE STRUCTURE RIM ELEVATIONS AND OFFSETS

LC6003

NO.	REVISIONS / REMARKS DESCRIPTION	DATE	BY	SURVEYOR: DSGNR/LIAISON: PLOTTED BY:	/
		/ /			
				MD8514 3/9/2016	

FILE NAME: U:\Design\Streets\15-00999-18-RS 21st Street Resurfacing (31st to Kenosha Rd)\Details\B-00999Sheet1.0084-LC.Details.dgn

21ST ST / KENOSHA RD / WADSWORTH RD

LakeCounty Division of Transportation

LAKE COUNTY DETAILS

21ST ST / KENOSHA RD / WADSWORTH RD

ROUTE	SECTION	SECTION NUMBER	SHEET	SHEETS
CH17 CH53 CH67	55 125 146	15-00999-18-RS	84	128

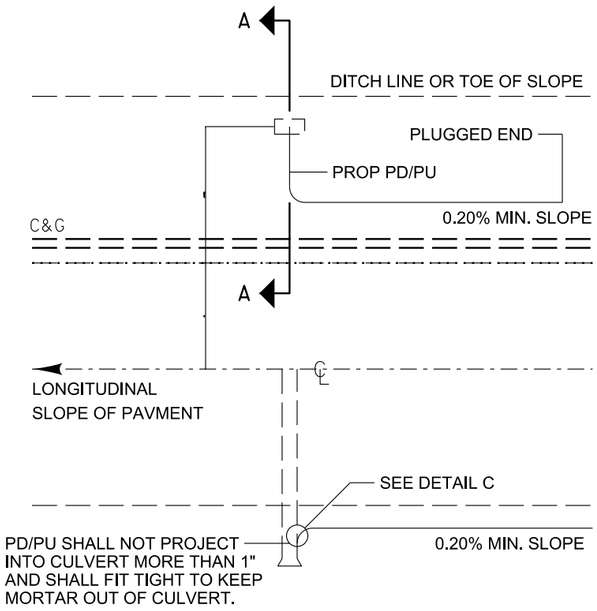

TYPICAL PIPE DRAIN/ PIPE UNDERDRAIN OUTLET

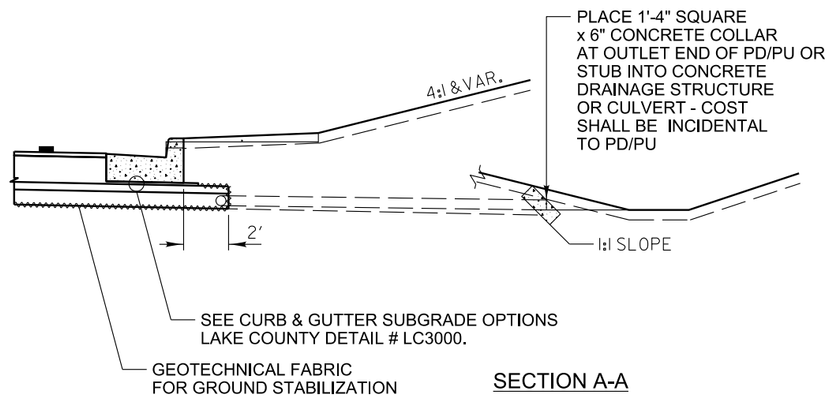

SECTION A-A

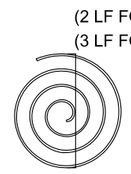

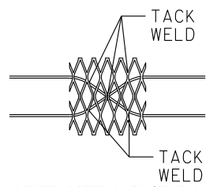

6"x6" EXPANDED METAL SHIELD WITH
TWO 2'-6" LONG PREFABRICATED
6 GAGE STEEL STRUTS FOR SNUG FIT
INTO THE PD/PU END.

RODENT SHIELDS DETAIL

(ALTERNATES)

DESIGN NOTES:

All work shall be according to the applicable portions of the "Standard Specifications" except as modified hereon.

In addition to the requirements of Article 601.08 of the "Standard Specifications", the contract unit price per foot for pipe drains 4" & 6" and pipe underdrains 4" shall include the cost of furnishing and placing the rodent shield.

The removable rodent shield shall be furnished and installed in accordance with one of the configurations shown. The shield shall be fabricated from steel wire, or expanded metal, as detailed above and shall be galvanized after fabrication in accordance with AASHTO M-111. Other submitted designs for a removable rodent shield will be allowed with the approval of the Engineer.

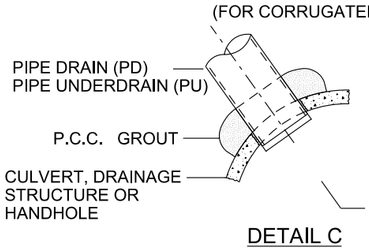

DETAIL C

NOT TO SCALE

REVISIONS	DATE
Pipe Drain Added to Labels	5/19/2009
Revised Type A to Type B Aggregate	12/20/12
Removed HMA Shldr & Agg	11/20/13

LakeCounty Division of Transportation

APPROVED BY: M. G. ZEMAITIS
DATE: APRIL 1, 2007

SUB-SURFACE DRAINS

LC6020

TYPICAL APPLICATION OF TRAFFIC CONTROL DEVICES for HIGHWAY CONSTRUCTION, CONTRACT MAINTENANCE and UTILITY OPERATIONS

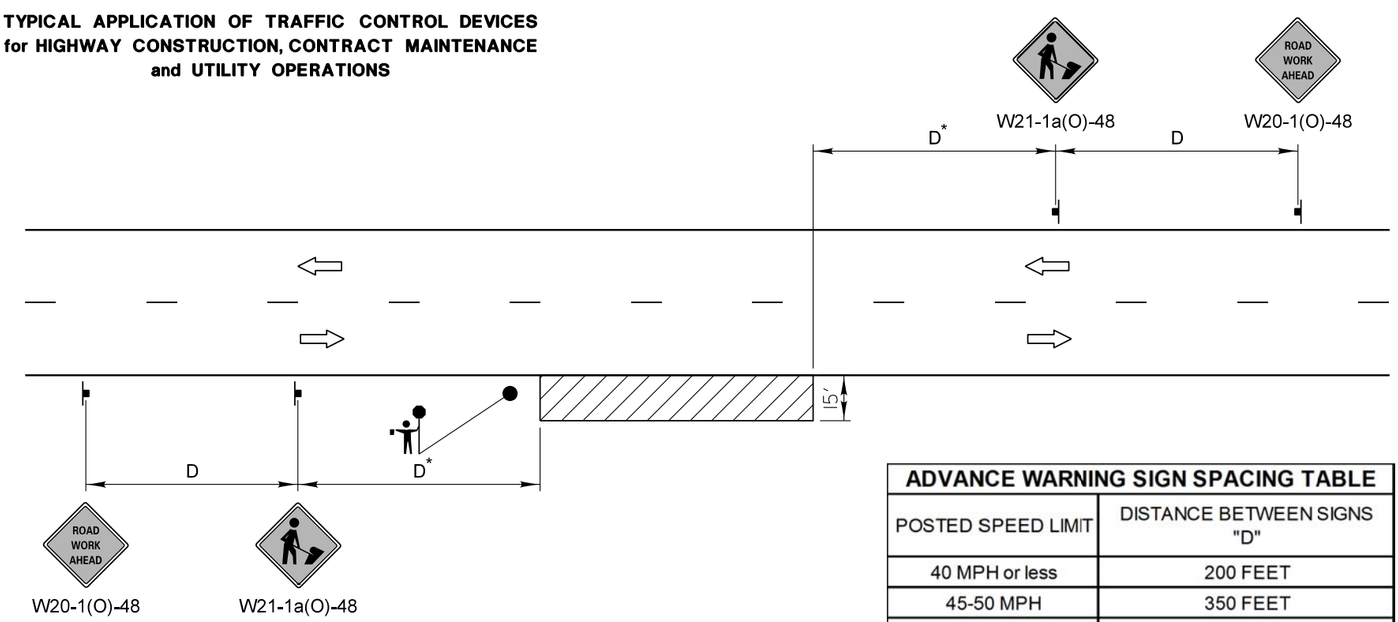

ADVANCE WARNING SIGN SPACING TABLE	
POSTED SPEED LIMIT	DISTANCE BETWEEN SIGNS "D"
40 MPH or less	200 FEET
45-50 MPH	350 FEET
55 MPH	500 FEET

GENERAL NOTES:

This special detail is used at any time, any vehicle, equipment, workers or their activities require a stationary, intermittent or continuous moving operation within 15 feet of the traffic lane, where the average speed is 1 mph or less.

* Minimum distance "D" is shown in the Advance Warning Sign Spacing Table. If the work is a moving operation, the maximum distance "D" may be extended to ½ the length required for one normal working day's operation or 4 miles, whichever is less.

If the work operation does not exceed 60 minutes, traffic control may be according to I.D.O.T. Highway Standard 701301.

SYMBOLS

- WORK AREA
- SIGN ON PORTABLE OR PERMANENT SUPPORT
- FLAGGER WITH TRAFFIC CONTROL SIGN WHEN REQUIRED

MODIFIED IDOT STANDARD 701011-02

NOT TO SCALE

REVISIONS	DATE
Title Block Revision	8/1/09
Reformat LCDOT Standard	7/15/10

LakeCounty Division of Transportation

APPROVED BY: A. KHAWAJA
DATE: APRIL 1, 2007

TWO LANE, TWO WAY, OFF-ROAD OPERATIONS DAY OPERATIONS ONLY

LC7000

NO.	REVISIONS / REMARKS DESCRIPTION	DATE	BY	SURVEYOR: DSGNR/LIAISON: PLOTTED BY:
		/ /		
				WD8574 3/9/2006

FILE NAME: U:\Design\Streets\15-00999-18-RS 21st Street Resurfacing (31st to Kenosha Rd)\Details\B-00999Sheet1_0085_LC_Details.dgn

21ST ST / KENOSHA RD / WADSWORTH RD

LakeCounty Division of Transportation

LAKE COUNTY DETAILS

21ST ST / KENOSHA RD / WADSWORTH RD

ROUTE	SECTION	SECTION NUMBER	SHEET	SHEETS
CH17 CH53 CH67	55 125 146	15-00999-18-RS	85	128

TYPICAL APPLICATION OF TRAFFIC CONTROL DEVICES for HIGHWAY CONSTRUCTION, CONTRACT MAINTENANCE and UTILITY OPERATIONS

NOT TO SCALE

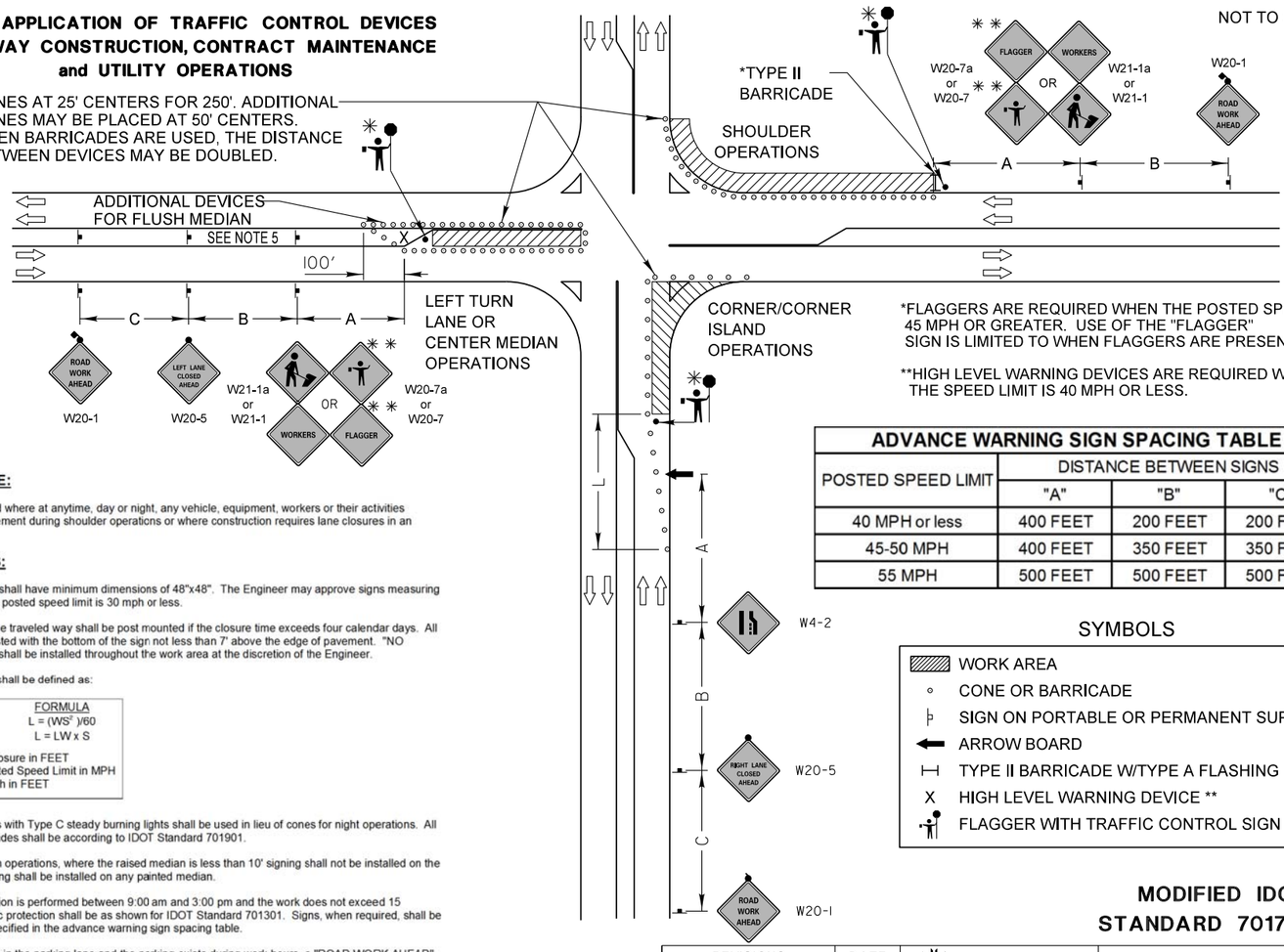

*FLAGGERS ARE REQUIRED WHEN THE POSTED SPEED IS 45 MPH OR GREATER. USE OF THE "FLAGGER" SIGN IS LIMITED TO WHEN FLAGGERS ARE PRESENT.

**HIGH LEVEL WARNING DEVICES ARE REQUIRED WHEN THE SPEED LIMIT IS 40 MPH OR LESS.

ADVANCE WARNING SIGN SPACING TABLE

POSTED SPEED LIMIT	DISTANCE BETWEEN SIGNS "A"	"B"	"C"
40 MPH or less	400 FEET	200 FEET	200 FEET
45-50 MPH	400 FEET	350 FEET	350 FEET
55 MPH	500 FEET	500 FEET	500 FEET

SYMBOLS

- WORK AREA
- CONE OR BARRICADE
- SIGN ON PORTABLE OR PERMANENT SUPPORT
- ARROW BOARD
- TYPE II BARRICADE W/TYPE A FLASHING LIGHT
- X HIGH LEVEL WARNING DEVICE **
- FLAGGER WITH TRAFFIC CONTROL SIGN

GENERAL NOTE:

This Standard is used where at anytime, day or night, any vehicle, equipment, workers or their activities encroach on the pavement during shoulder operations or where construction requires lane closures in an urban area.

DESIGN NOTES:

1. All warning signs shall have minimum dimensions of 48"x48". The Engineer may approve signs measuring 36"x36" when the posted speed limit is 30 mph or less.
2. All signs not on the traveled way shall be post mounted if the closure time exceeds four calendar days. All signs shall be posted with the bottom of the sign not less than 7' above the edge of pavement. "NO PARKING" signs shall be installed throughout the work area at the discretion of the Engineer.
3. The distance "L" shall be defined as:

SPEED	FORMULA
≤ 40 MPH	$L = (WS^2)/60$
≥ 45 MPH	$L = LW \times S$

W = Width of Closure in FEET
S = Normal Posted Speed Limit in MPH
LW = Lane Width in FEET

4. Type II barricades with Type C steady burning lights shall be used in lieu of cones for night operations. All cones and barricades shall be according to IDOT Standard 701901.
5. For raised median operations, where the raised median is less than 10' signing shall not be installed on the median. No signing shall be installed on any painted median.
6. If the work operation is performed between 9:00 am and 3:00 pm and the work does not exceed 15 minutes, the traffic protection shall be as shown for IDOT Standard 701301. Signs, when required, shall be at the spacing specified in the advance warning sign spacing table.
7. If the work area is in the parking lane and the parking exists during work hours, a "ROAD WORK AHEAD" sign shall be installed in advance of work area at the spacing specified in the Advance Warning Sign Spacing Table and the area protected with cones or barricades.
8. Type A flashing lights shall be used on each approach in advance of the work area during hours of darkness and installed above the first two sign in each series and the high level warning devices.
9. Longitudinal dimensions may be adjusted to fit field conditions.
10. Form BT 725 is required.

MODIFIED IDOT STANDARD 701701-06

REVISIONS	DATE
Revised IDOT Reference	2/1/08
Title Block Revision	8/1/09
Reformat LCDOT Standard	7/15/10

LakeCounty Division of Transportation

APPROVED BY: ANTHONY KHAWAJA
DATE: APRIL 1, 2007

URBAN LANE CLOSURE MULTILANE INTERSECTION

LC7003

TYPICAL APPLICATION OF TRAFFIC CONTROL DEVICES for HIGHWAY CONSTRUCTION, CONTRACT MAINTENANCE and UTILITY OPERATIONS

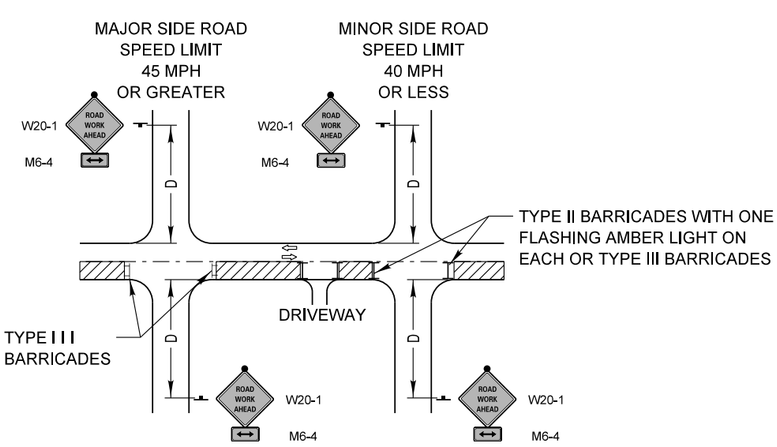

SYMBOLS

- WORK AREA
- SIGN ON PORTABLE OR PERMANENT SUPPORT
- TYPE II BARRICADE W/TYPE A FLASHING LIGHT
- TYPE III BARRICADE

ADVANCE WARNING SIGN SPACING TABLE

POSTED SPEED LIMIT	DISTANCE BETWEEN SIGNS "D"
40 MPH or less	200 FEET
45-50 MPH	350 FEET
55 MPH	500 FEET

GENERAL NOTE:

This Standard is used where at anytime, day or night, any vehicle, equipment, workers or their activities encroach on the pavement or where construction requires lane closures.

DESIGN NOTES:

1. For a side road with a speed limit of 40 mph or less, the closed portion of the main route shall be protected by blocking with Type II or Type III barricades, ⅓ of the cross section of the closed portion of the roadway.
2. For a side road with a speed limit of 45 mph or greater, the closed portion of the main route shall be protected by blocking with Type III barricades, ½ of the cross section of the closed portion of the roadway.
3. All W20-1 "ROADWORK AHEAD" signs shall be 48" x 48" with fluorescent orange reflective sheeting with an amber Type A flashing light mounted on the sign.
4. When the side road lies between the beginning of the mainline signing and the work zone, a M6-1 Single Headed Arrow shall be used in lieu of the M6-4 Double Headed Arrow.
5. For a lane closure on a side road or driveway, use the applicable portions of the appropriate Highway Standard or Traffic Control Detail. The spacing of the signs and barricades shall be adjusted for field conditions as directed by the engineer. The directional arrow shall be covered or removed when no longer consistent with the side road lane closure.
6. Advance warning signs shall be omitted on driveways unless otherwise noted.
7. The traffic control and protection for side roads and intersections shall be included in the contract unit lump sum price for "TRAFFIC CONTROL AND PROTECTION."

NOT TO SCALE

MODIFIED IDOT DISTRICT ONE SIDE ROAD DETAIL

REVISIONS	DATE
Title Block Revision	8/1/09
Reformat LCDOT Standard	7/15/10

LakeCounty Division of Transportation

APPROVED BY: ANTHONY KHAWAJA
DATE: APRIL 1, 2007

TRAFFIC CONTROL and PROTECTION for SIDEROADS, INTERSECTIONS and DRIVEWAYS

LC7004

NO.	REVISIONS / REMARKS DESCRIPTION	DATE	BY
		/ /	
		/ /	

SURVEYOR: DSGNR/LIAISON: PLOTTED BY: HD8514 3/9/2006

21ST ST / KENOSHA RD / WADSWORTH RD

LakeCounty Division of Transportation

LAKE COUNTY DETAILS

21ST ST / KENOSHA RD / WADSWORTH RD

ROUTE	SECTION	SECTION NUMBER	SHEET	SHEETS
CH17 CH53 CH67	55 125 146	15-00999-18-RS	86	128

FILE NAME: U:\Design\Streets\15-00999-18-RS 21st Street Resurfacing (31st to Kenosha Rd)\Details\B-00999Sheet_0086_LC_Details.dgn

NOT TO SCALE

TYPICAL APPLICATION OF TRAFFIC CONTROL DEVICES for HIGHWAY CONSTRUCTION, CONTRACT MAINTENANCE and UTILITY OPERATIONS

3 LANE ROAD SECTION with 2-WAY LEFT TURN LANE

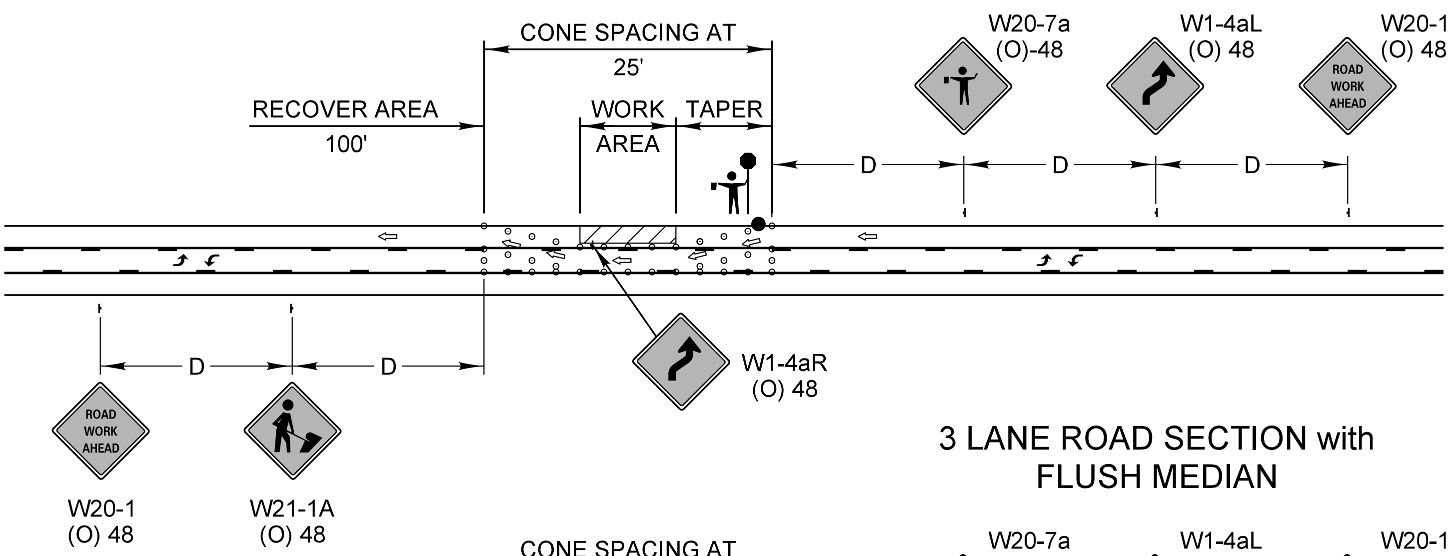

GENERAL NOTE:

This Standard is used where during the day only, any vehicle, equipment, workers or their activities encroach on a 3 lane, two way pavement requiring the closure of one traffic lane.

3 LANE ROAD SECTION with FLUSH MEDIAN

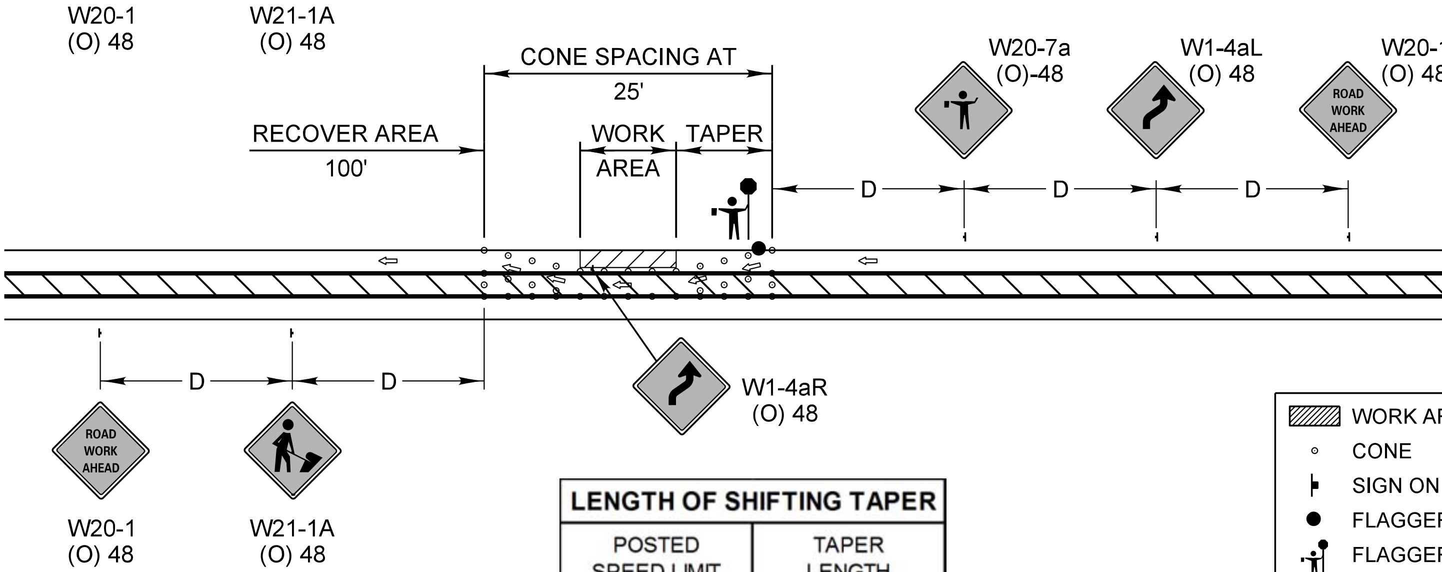

SYMBOLS

- WORK AREA
- CONE
- SIGN ON PORTABLE OR PERMANENT SUPPORT
- FLAGGER STATION
- FLAGGER WITH SLOW PADDLE

ADVANCE WARNING SIGN SPACING TABLE	
POSTED SPEED LIMIT	DISTANCE BETWEEN SIGNS "D"
40 MPH or less	200 FEET
45-50 MPH	350 FEET
55 MPH	500 FEET

LENGTH OF SHIFTING TAPER	
POSTED SPEED LIMIT	TAPER LENGTH
30 MPH	100'
35 MPH	125'
40 MPH	150'
45 MPH	275'
50 MPH	300'
55 MPH	325'

REVISIONS	DATE
Title Block Revision	8/1/09
Reformat LCDOT Standard	7/15/10

LakeCounty Division of Transportation

APPROVED BY: A. KHAWAJA
DATE: APRIL 1, 2007

TYPICAL LANE CLOSURE 3 LANE ROAD SECTION

LC7005

DIRECTION INDICATOR BARRICADES

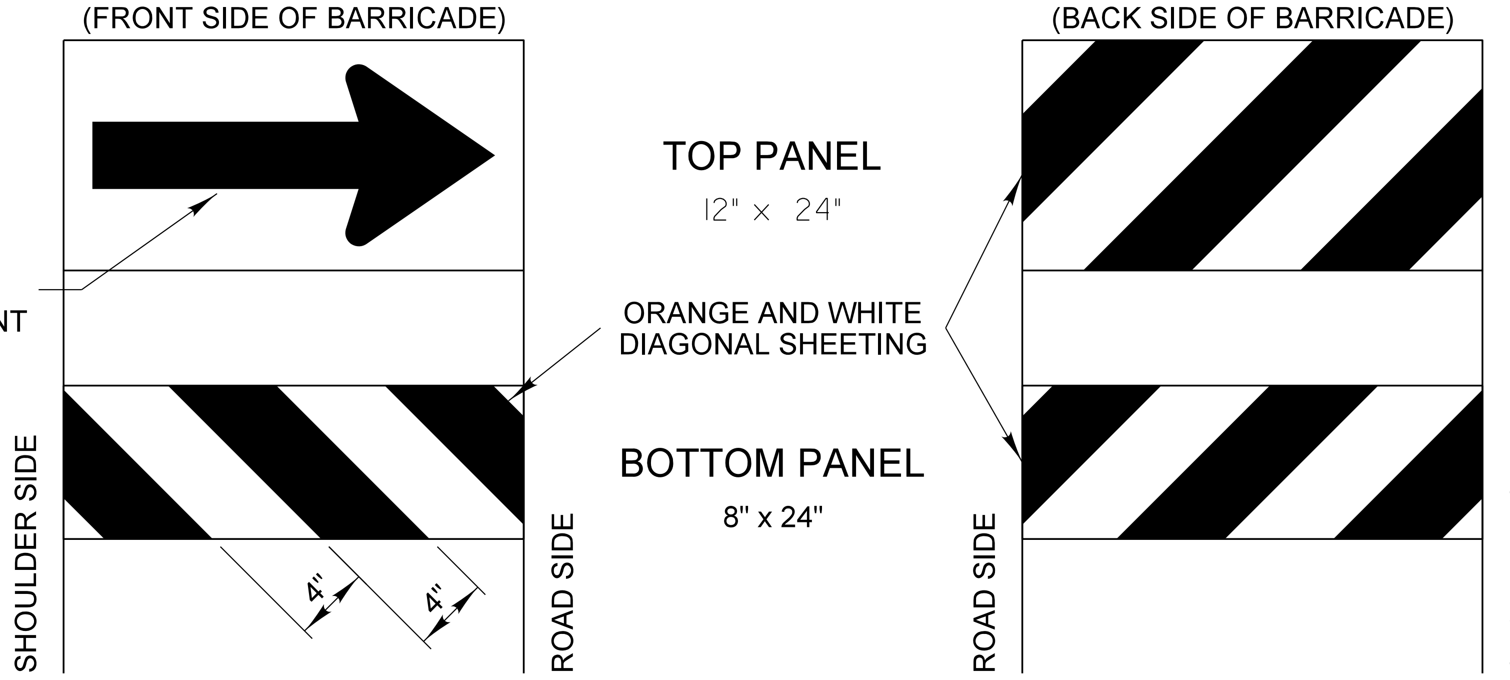

GENERAL NOTES

1) Direction Indicator Barricades shall be constructed from non-metallic Type II barricades meeting the requirements of Article 1106.02 of the Standard Specifications, except where modified by this detail.
2) The Direction Indicator Barricades shall be equipped with Type C steady burning lights if used to channelize traffic during the hours of darkness.
3) The reflective sheeting for the top panel shall be Type AZ fluorescent orange. The diagonal panels shall have orange and white Type A or better reflective sheeting.

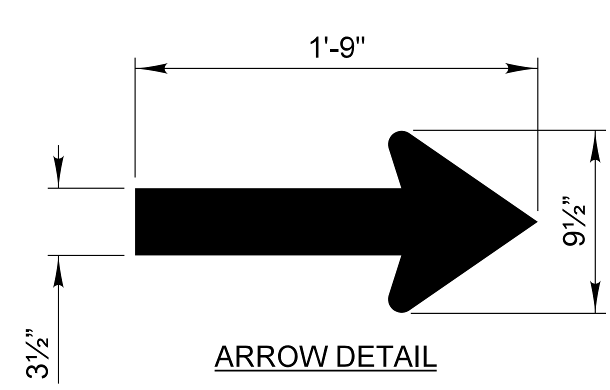

ARROW DETAIL

REVISIONS	DATE
Text Update	7/15/11

LakeCounty Division of Transportation

APPROVED BY: ANTHONY KHAWAJA
DATE: APRIL 1, 2007

TYPICAL APPLICATION OF TRAFFIC CONTROL DEVICES HIGHWAY CONSTRUCTION, CONTRACT MAINTENANCE

DIRECTION INDICATOR BARRICADES

LC7200

TYPICAL PAVEMENT MARKINGS

TYPICAL MINI-SKIP PAVEMENT MARKINGS

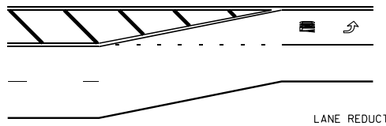

LANE REDUCTION

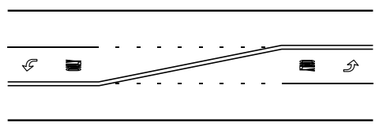

DOUBLE TAPER

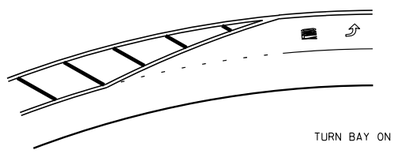

TURN BAY ON CURVE

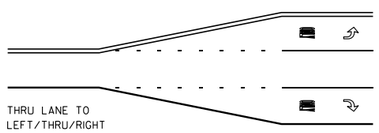

THRU LANE TO
LEFT/THRU/RIGHT

MINI-SKIPS ARE 2 FEET WHITE LINE WITH 6 FEET SPACING. THE MINI-SKIP IS THE SAME WIDTH AS THE PAVEMENT MARKING LINE. IT EXTENDS.

EDGE LINE RADII AT SIDE STREETS

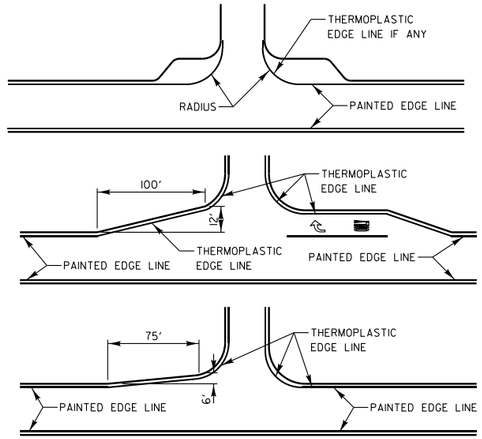

LANE REDUCTION ARROW PLACEMENT

REFERENCE:
1. MANUAL ON UNIFORM TRAFFIC CONTROL DEVICES, 2009 EDITION (USDOT-FHWA), TABLE 2C-4, CONDITION "A".

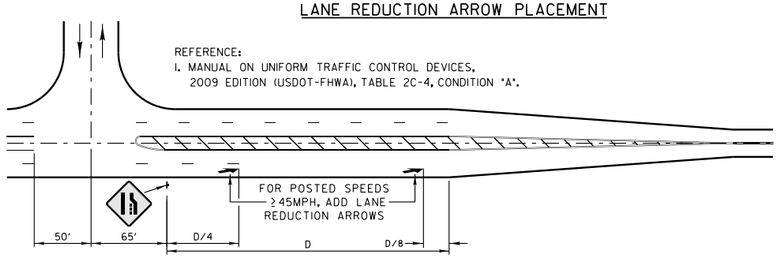

DESIGN SPEED MPH	D (FEET)
<45	N/A
45	775' (1)
50	885' (1)
55	990' (1)

TYPCIAL TURN BAY PAVEMENT MARKINGS

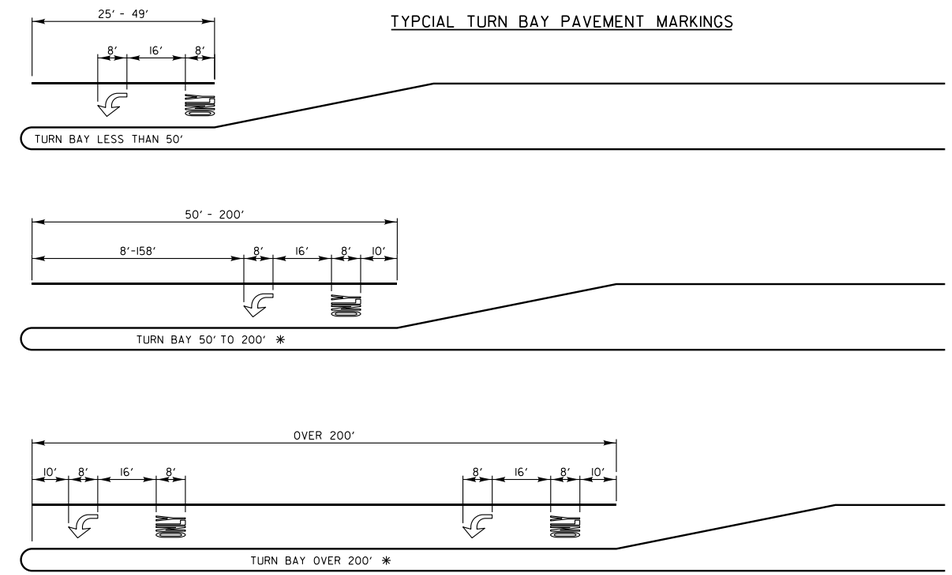

✳ AT INTERSECTIONS WITH VIDEO DETECTION, THE ARROW AND ONLY PAVEMENT MARKINGS SHALL BE A MINIMUM OF 30' BEHIND THE STOP BAR.

AREA = 15.6 SQ. FT.

ONLY AREA = 20.8 SQ FT.

FULL SIZE LETTERS (8') AND ARROWS SHALL BE USED. TURN LANES IN EXCESS OF 400' IN LENGTH MAY HAVE AN ADDITIONAL SET OF ARROW W/ "ONLY" INSTALLED MIDWAY BETWEEN THE OTHER TWO SETS OF ARROW W/ "ONLY".

TWO LANE ROAD

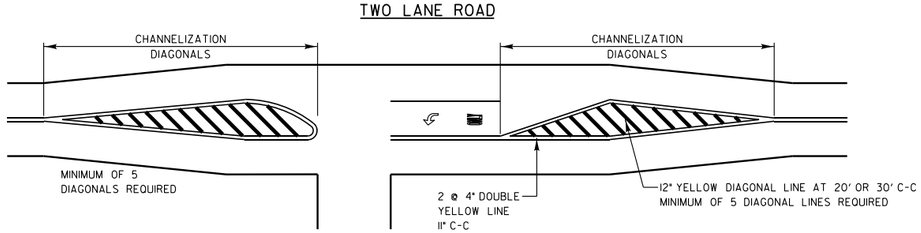

TWO-WAY LEFT TO LEFT TURN BAY

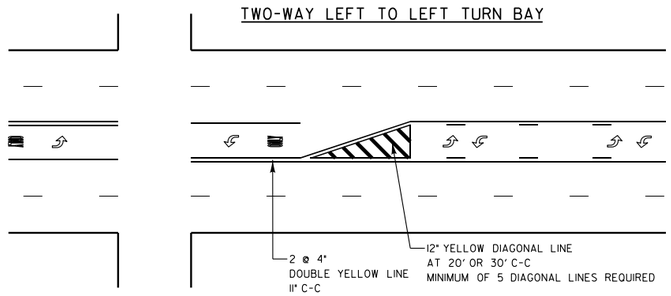

TYPICAL DIAGONAL SPACING

DIAGONAL SPACING

SPEED LIMIT RANGE	CONTINUOUS	INTERSECTION CHANNELIZATION
30-45 MPH	75 FT.	20 FT.
OVER 45 MPH	150 FT.	30 FT.

DUAL LEFT TURN ARROWS

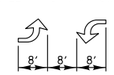

31.2 SQ. FT. MINIMUM
OF 2 SETS REQUIRED

A MINIMUM OF TWO PAIRS OF DUAL LEFT TURN ARROWS SHALL BE USED. THE DUAL LEFT TURN ARROWS SHALL BE WHITE IN COLOR. THE INTERVAL BETWEEN SETS OF DUAL LEFT TURN ARROWS SHOULD BE 200' AND 300'.

3 OR 5 LANE ROAD

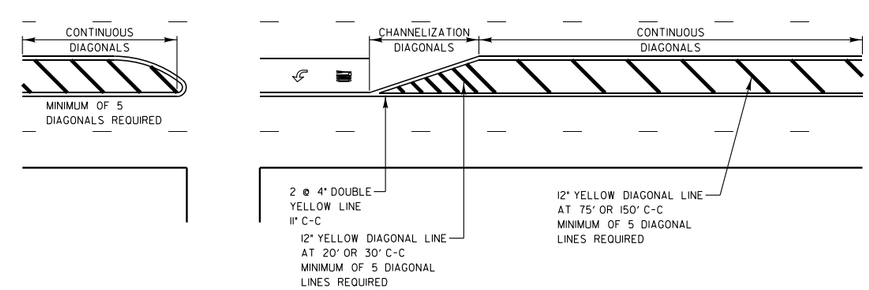

REVISIONS	DATE
SEPARATED RAILROAD SHEET	06/02/08
ADDED LANE REDUCTION ARROWS	07/1/12
RAISED TO RECESSED MARKERS	12/2/13
REMOVE STATION NUMBERS	5/30/14

LakeCounty
Division of Transportation

APPROVED BY: A. KHAWAJA
DATE: APRIL 1, 2007

TYPICAL PAVEMENT MARKINGS FOR COUNTY HIGHWAYS

SHEET 1 OF 2

LC7800

REVISIONS / REMARKS					
NO.	DESCRIPTION	DATE	BY	SURVEYOR:	/
		/ /		DSGNR/LIAISON:	
		/ /		PLOTTED BY:	HDI8574 3/9/2016

21ST ST / KENOSHA RD / WADSWORTH RD

LakeCounty
Division of Transportation

LAKE COUNTY DETAILS

21ST ST / KENOSHA RD / WADSWORTH RD

ROUTE	SECTION	SECTION NUMBER	SHEET	SHEETS
CH17 CH53 CH67	55 125 146	15-00999-18-RS	88	128

FILE NAME: U:\Design\Shrestha\15-00999-18-RS 21st Street Resurfacing (131 to Kenosha Rd)\Details\B-00999$Sheet_0088_LC_Details.dgn

TYPICAL PAVEMENT MARKINGS AND RECESSED PAVEMENT MARKERS

THRU LANE TO TURN LANE CONVERSION

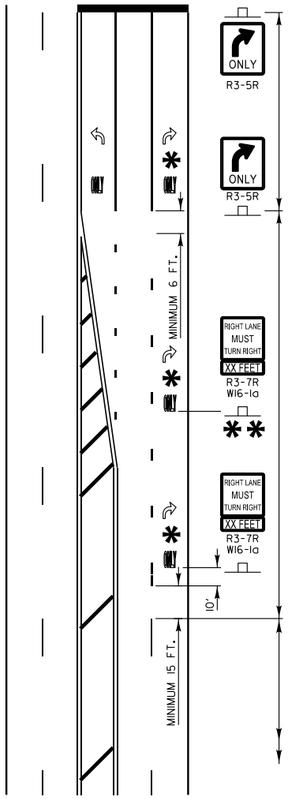

TURN LANE
6" WHITE LINE
(ADDITIONAL PAVEMENT MARKINGS AS SHOWN ON SHEET ONE OF THE L.C.D.O.T TYPICAL PAVEMENT MARKINGS DETAIL SHEETS)

TRANSITION ZONE
6" WHITE 3'/12' SKIP DASH
LANE LINE

THRU LANE
4 " WHITE 10'/30' SKIP DASH
LANE LINE

MINIMUM TRANSITION ZONE LENGTH

POSTED SPEED	LENGTH
25 M.P.H.	255 FT
30 M.P.H.	330 FT
35 M.P.H.	405 FT
40 M.P.H.	480 FT
45 M.P.H.	555 FT
50 M.P.H.	630 FT
55 M.P.H.	705 FT

✱ LOCATION OF PAV'T MARKINGS

(MEASURED FROM BEGINNING OF TRANSITION ZONE)

POSTED SPEED	LOCATION OF PAV'T MARKINGS
25 M.P.H.	10 FT, 260 FT
30 M.P.H.	10 FT, 170 FT, 340 FT
35 M.P.H.	10 FT, 210 FT, 410 FT
40 M.P.H.	10 FT, 170FT, 330 FT, 490 FT
45 M.P.H.	10 FT, 190 FT, 370 FT, 560 FT
50 M.P.H.	10 FT, 170 FT, 330 FT, 490 FT, 640 FT
55 M.P.H.	10 FT, 180 FT, 350 FT, 520 FT, 710 FT

✱✱ FOR POSTED SPEEDS 40 M.P.H. OR GREATER A SECOND R3-7/W16-1a SIGN INSTALLATION SHALL BE LOCATED HALFWAY BETWEEN THE BEGINNING OF THE TRANSITION ZONE AND THE BEGINNING OF THE TURN LANE

PAVEMENT MARKING GUIDELINES

TYPE OF MARKING	WIDTH OF LINE	PATTERN	COLOR	SPACING / REMARKS
CENTERLINE OF 2 LANE PAVEMENT	4 IN.	SKIP-DASH	YELLOW	10 FT. LINE WITH 30 FT. SPACE
NO PASSING ZONE LINES: FOR ONE DIRECTION FOR BOTH DIRECTIONS	4 IN. 2 @ 4 IN.	SOLID SOLID	YELLOW YELLOW	5 1/2 IN. C-C FROM SKIP-DASH CENTERLINE 11 IN. C-C (OMIT SKIP-DASH CENTERLINE BETWEEN)
CENTERLINE ON MULTI-LANE UNDIVIDED	2 @ 4 IN.	SOLID	YELLOW	11 IN. C-C
LANE LINES	4 IN.	SKIP-DASH	WHITE	10 FT. LINE WITH 30 FT. SPACE
DOTTED LINES (EXTENSIONS OF CENTER, LANE OR TURN LANE MARKINGS)	SAME AS LINE BEING EXTENDED	SKIP-DASH	SAME AS LINE BEING EXTENDED	2 FT. LINE WITH 6 FT. SPACE
EDGE LINES	5 IN. WHITE 4 IN. YELLOW	SOLID	WHITE - RIGHT YELLOW - LEFT	OUTLINE RAISED MEDIANS IN YELLOW
TURN LANE MARKINGS	6 IN. LINE FULL SIZE LETTERS AND SYMBOLS (8 FT.)	SOLID	WHITE	TURN ARROW 15.6 SQ. FT. STRAIGHT ARROW 11.5 SQ. FT. ONLY 20.8 SQ. FT. COMB. ARROW 26.0 SQ. FT.
TWO WAY LEFT TURN MARKING	2 @ 4 IN. EACH DIRECTION 8 FT. LEFT ARROW	SKIP-DASH AND SOLID IN PAIRS	YELLOW WHITE	10 FT. LINE WITH 30 FT. SPACE FOR SKIP-DASH 5 1/2 IN. C-C BETWEEN SKIP-DASH LINE AND SOLID LINE SEE TYPICAL TWO-WAY LEFT TURN MARKING DETAIL
CROSSWALK	12 IN. @ 90°	SOLID	WHITE	12 IN. LONGITUDINAL BAR WITH 24 IN. SPACE 6 FT. TO 12 FT. WIDE SEE TYPICAL CROSSWALK MARKING DETAIL
STOP BARS	24 IN.	SOLID	WHITE	PLACE 4 FT. IN ADVANCE OF AND PARALLEL TO CROSSWALK, IF PRESENT, OTHERWISE PLACE AT DESIRED STOPPING POINT.
PAINTED MEDIANS	2 @ 4 IN. & 11 IN. C-C 12 IN. DIAGONALS @ 45° NO DIAGONALS USED FOR 4 FT. WIDE MEDIAN	SOLID	YELLOW: 2-WAY TRAFFIC WHITE: 1-WAY TRAFFIC	11 IN. C-C FOR THE DOUBLE LINE SEE TYPICAL PAINTED MEDIAN MARKING DETAIL MINIMUM OF 5 DIAGONALS
GORE MARKING AND CHANNELIZING LINES	8 IN. WITH 12 IN. DIAGONALS @ 45°	SOLID	WHITE	DIAGONALS 15 FT. C-C (LESS THAN 30 M.P.H.) 20 FT. C-C (30 TO 45 M.P.H.) 30 FT. C-C (OVER 45 M.P.H.) MINIMUM OF 5 DIAGONALS
R.R. CROSSING	24 IN. TRANSVERSE LINES RR IS 6 FT. LETTER 16 IN. LINE FOR 'X'	SOLID	WHITE	SEE I.D.O.T. STD. 78000I SQ. FT. AREA OF: "R" = 3.6 SQ. FT. / "R" "X" = 54.0 SQ. FT.
SHOULDER DIAGONALS (FOR PAVED SHOULDER ≥ 6 FT.)	12 IN. @ 45°	SOLID	WHITE - RIGHT YELLOW - LEFT	50 FT. C-C (LESS THAN 30 M.P.H.) 75 FT. C-C (30 TO 45 M.P.H.) 150 FT. C-C (OVER 45 M.P.H.) MINIMUM OF 5 DIAGONALS

FOR FURTHER DETAILS ON PAVEMENT MARKING REFER TO PART III "MARKINGS" IN THE "ILLINOIS MANUAL ON UNIFORM TRAFFIC CONTROL DEVICES", THE "STANDARD SPECIFICATIONS FOR ROAD AND BRIDGE CONSTRUCTION", AND THE LATEST I.D.O.T. HIGHWAY STANDARD 78000I.

TYPICAL RECESSED PAVEMENT MARKER INSTALLATION

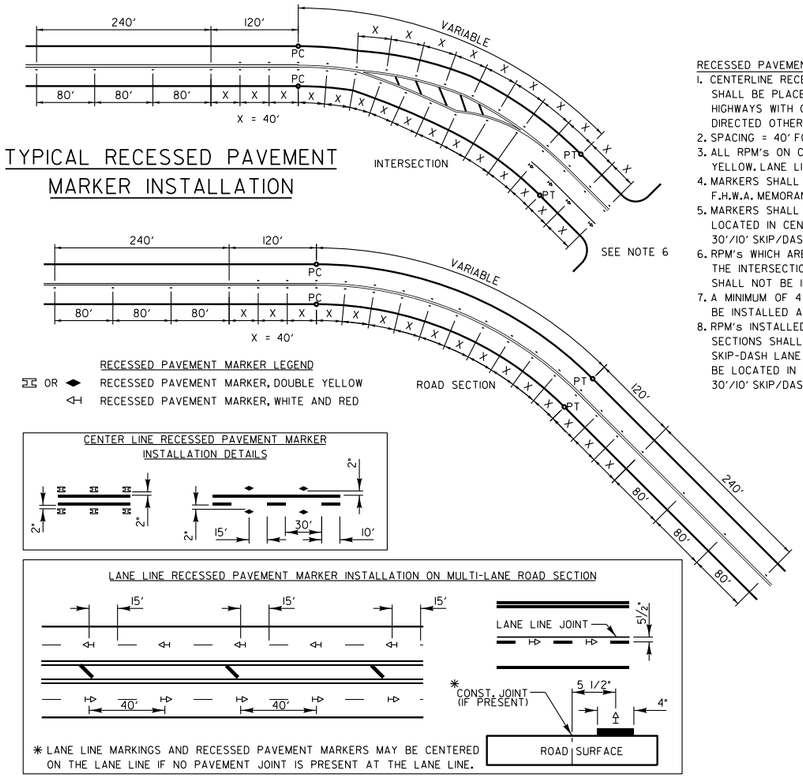

RECESSED PAVEMENT MARKER LEGEND
OR RECESSED PAVEMENT MARKER, DOUBLE YELLOW
RECESSED PAVEMENT MARKER, WHITE AND RED

CENTER LINE RECESSED PAVEMENT MARKER INSTALLATION DETAILS

LANE LINE RECESSED PAVEMENT MARKER INSTALLATION ON MULTI-LANE ROAD SECTION

✱ LANE LINE MARKINGS AND RECESSED PAVEMENT MARKERS MAY BE CENTERED ON THE LANE LINE IF NO PAVEMENT JOINT IS PRESENT AT THE LANE LINE.

RECESSED PAVEMENT MARKER NOTES:
1. CENTERLINE RECESSED PAVEMENT MARKERS (RPM's) SHALL BE PLACED ON ALL TWO AND THREE LANE HIGHWAYS WITH CURVES OVER 3 1/2 DEGREES, UNLESS DIRECTED OTHERWISE BY THE ENGINEER.
2. SPACING = 40' FOR CENTERLINE MARKERS.
3. ALL RPM's ON CENTERLINE ARE 2-WAY YELLOW. LANE LINE MARKERS ARE WHITE/RED.
4. MARKERS SHALL BE INSTALLED ACCORDING TO F.H.W.A. MEMORANDUM HIO-21.
5. MARKERS SHALL BE FIELD ADJUSTED TO BE LOCATED IN CENTER OF THE 30' GAP OF A 30'/10' SKIP/DASH CENTERLINE.
6. RPM's WHICH ARE TO BE LOCATED WITHIN THE INTERSECTION OF A CROSS STREET, SHALL NOT BE INSTALLED.
7. A MINIMUM OF 4 WHITE/RED MARKERS SHALL BE INSTALLED ALONG THE TURN LANE LINE.
8. RPM's INSTALLED ON MULTI-LANE ROAD SECTIONS SHALL BE INSTALLED ON THE WHITE SKIP-DASH LANE LINE ONLY. THESE RPM's SHALL BE LOCATED IN CENTER OF THE 30' GAP OF A 30'/10' SKIP/DASH LANE LINE.

CROSSWALKS

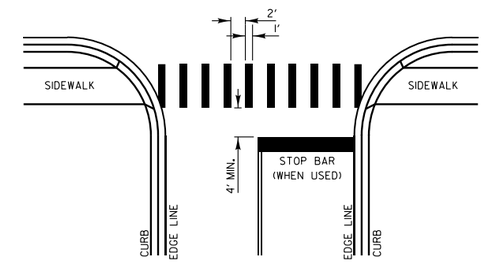

CROSSWALK NOTES:
1. WIDTH OF THE CROSSWALK IS GENERALLY 6' EXCEPT AT SCHOOL CROSSINGS AND BICYCLE CROSSINGS, WHICH CAN BE 8'.
2. THE STOP BAR SHOULD BE INSTALLED A MINIMUM OF 4' IN ADVANCE OF THE CROSSWALK.

CURB MARKING

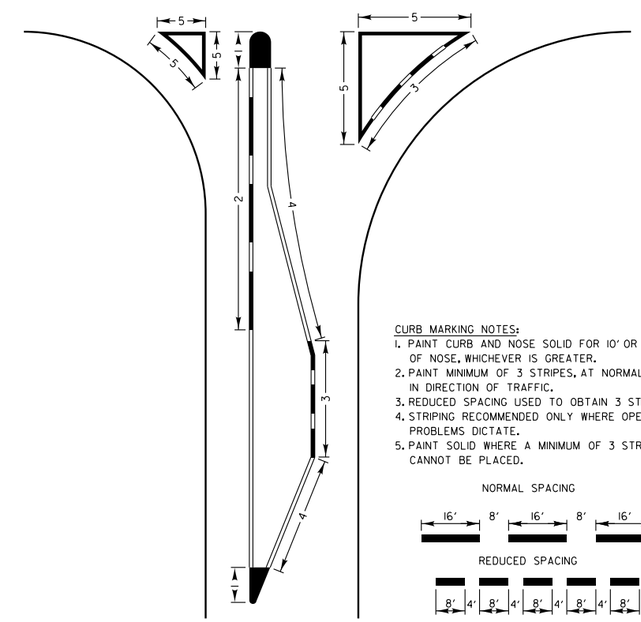

CURB MARKING NOTES:
1. PAINT CURB AND NOSE SOLID FOR 10' OR RADIUS OF NOSE, WHICHEVER IS GREATER.
2. PAINT MINIMUM OF 3 STRIPES, AT NORMAL SPACING, IN DIRECTION OF TRAFFIC.
3. REDUCED SPACING USED TO OBTAIN 3 STRIPE MINIMUM.
4. STRIPING RECOMMENDED ONLY WHERE OPERATIONAL PROBLEMS DICTATE.
5. PAINT SOLID WHERE A MINIMUM OF 3 STRIPES CANNOT BE PLACED.

NORMAL SPACING

REDUCED SPACING

PAVEMENT CROSS SECTION SHOWING TYPICAL PAVEMENT MARKINGS

(2-LANE ROADWAY)

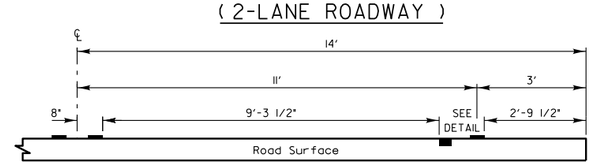

11' LANE WIDTH

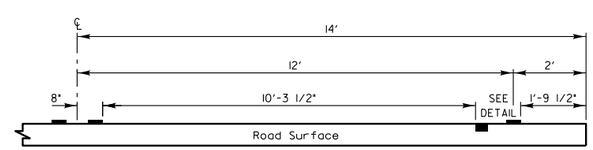

12' LANE WIDTH

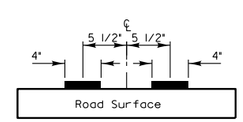

DOUBLE STRIPE CENTERLINE DETAIL

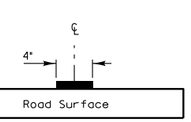

SINGLE STRIPE CENTERLINE DETAIL

NOTE:
CENTERLINE MARKINGS ARE 4" LINES AT 11" CENTERS.

REVISIONS	DATE
SEPARATED RAILROAD SHEET	06/02/08
REVISED RPM DETAILS	07/1/12
RAISED TO RECESSED MARKERS	12/2/13
REMOVE STATION NUMBERS	5/30/14

LakeCounty Division of Transportation

APPROVED BY: A. KHAWAJA
DATE: APRIL 1, 2007

TYPICAL PAVEMENT MARKINGS FOR COUNTY HIGHWAYS

SHEET 2 OF 2

LC7800

REVISIONS / REMARKS					
NO.	DESCRIPTION	DATE	BY	SURVEYOR:	/
		/ /		DSGNR/LIAISON:	
		/ /		PLOTTED BY:	HDI8574 3/9/2016

21ST ST / KENOSHA RD / WADSWORTH RD

LakeCounty Division of Transportation

LAKE COUNTY DETAILS

21ST ST / KENOSHA RD / WADSWORTH RD

ROUTE	SECTION	SECTION NUMBER	SHEET	SHEETS
CH17 CH53 CH67	55 125 146	15-00999-18-RS	89	128

FILE NAME: U:\Design\Shrestha\15-00999-18-RS 21st Street Resurfacing (131 to Kenosha Rd)\Details\B-00999Sheet_0089_LC_Details.dgn

TYPICAL SHORT TERM PAVEMENT MARKINGS

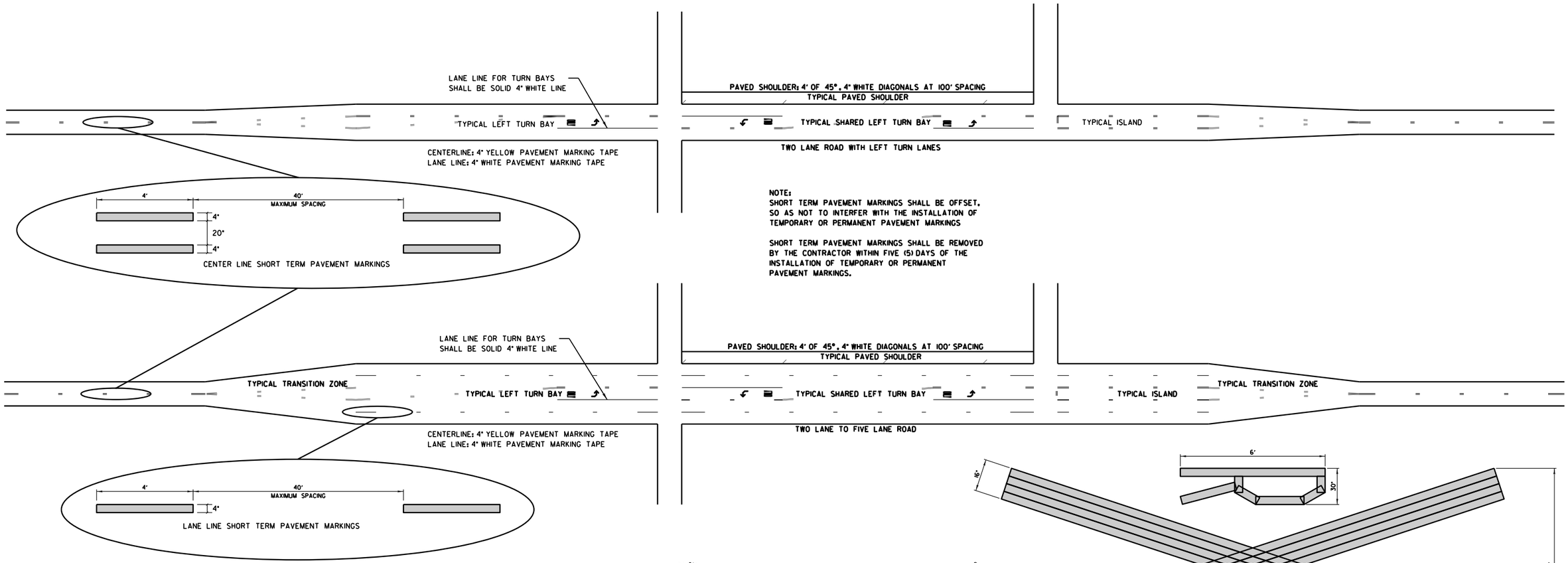

NOTE:
SHORT TERM PAVEMENT MARKINGS SHALL BE OFFSET, SO AS NOT TO INTERFER WITH THE INSTALLATION OF TEMPORARY OR PERMANENT PAVEMENT MARKINGS

SHORT TERM PAVEMENT MARKINGS SHALL BE REMOVED BY THE CONTRACTOR WITHIN FIVE (5) DAYS OF THE INSTALLATION OF TEMPORARY OR PERMANENT PAVEMENT MARKINGS.

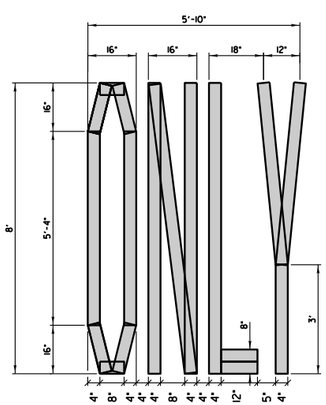

QUANTITY:
4" LINE = 64 FT. (21 SQ. FT.)

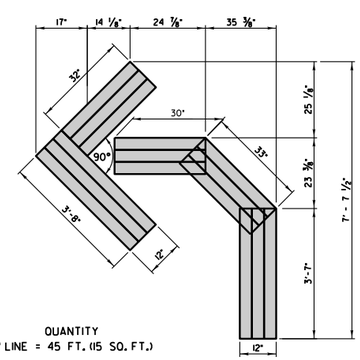

QUANTITY
4" LINE = 45 FT. (15 SQ. FT.)

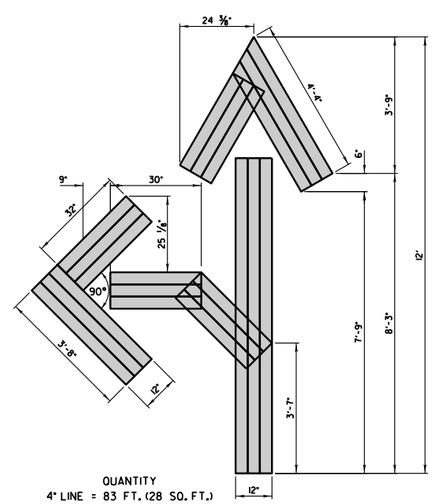

QUANTITY
4" LINE = 83 FT. (28 SQ. FT.)

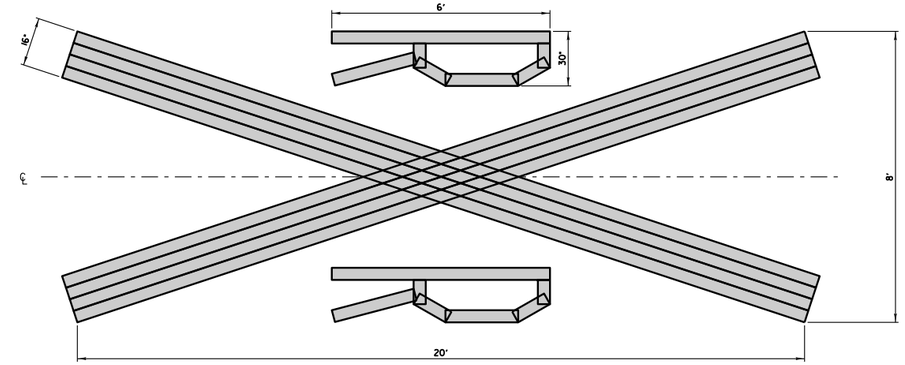

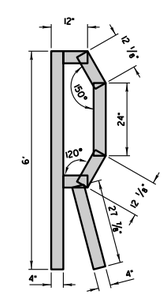

QUANTITY
4" LINE = 200 FT. (67 SQ. FT.)
("X" = 172 FT.)
("R" = 14 FT.)

REVISIONS	DATE
REMOVE DUAL DIMENSIONS	2/18/08

LakeCounty
Division of Transportation

APPROVED BY: A. KHAWAJA
DATE: APRIL 1, 2007

SHORT TERM PAVEMENT MARKINGS

LC7802

REVISIONS / REMARKS					
NO.	DESCRIPTION	DATE	BY	SURVEYOR:	/
		/ /		DSGNR/LIAISON:	
		/ /		PLOTTED BY:	HDI8574 3/9/2016

21ST ST / KENOSHA RD / WADSWORTH RD

LakeCounty
Division of Transportation

LAKE COUNTY DETAILS

21ST ST / KENOSHA RD / WADSWORTH RD

ROUTE	SECTION	SECTION NUMBER	SHEET	SHEETS
CH17 CH53 CH67	55 125 146	15-00999-18-RS	90	128

FILE NAME: U:\Design\Shrestha\15-00999-18-RS 21st Street Resurfacing (131 to Kenosha Rd)\Details\B-00999#Sheet_0090_LC_Details.dgn

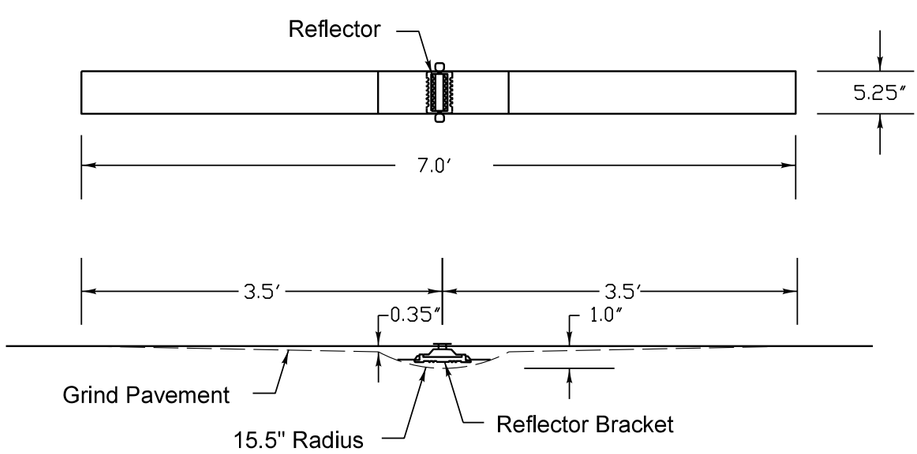

Notes

1. The reflective pavement marker lens shall be a 3M 190 series pavement marker or an approved equal.

2. The reflector bracket shall be made of a polycarbonate and shall be a MarkerOne Series R100 or an approved equal.

3. The adhesive used shall meet the requirements of AASHTO M237 specification for adhesives to be used in cementing asphalt surfaces.

4. Markers shall be placed at 40' intervals on lane lines and painted medians and 40' intervals on curves and approaching intersections as shown on LCDOT standard LC7800.

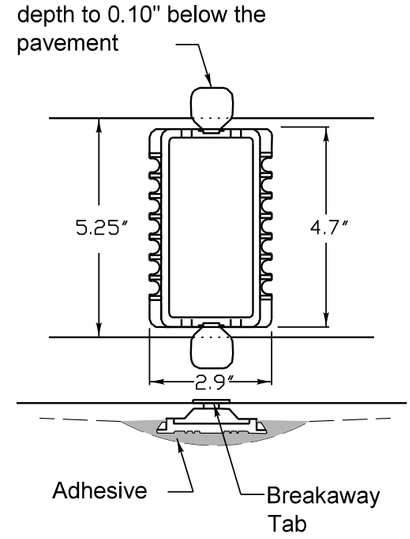

Reflector Bracket Detail

REVISIONS	DATE

LakeCounty Division of Transportation

APPROVED BY: JN
DATE: 12/02/13

RECESSED REFLECTIVE PAVEMENT MARKER

LC7805

NO.	REVISIONS / REMARKS DESCRIPTION	DATE	BY	SURVEYOR: DSGNR/LIAISON: PLOTTED BY:	/
		/ /		HD8514 3/9/206	

21ST ST / KENOSHA RD / WADSWORTH RD

LakeCounty Division of Transportation

LAKE COUNTY DETAILS
21ST ST / KENOSHA RD / WADSWORTH RD

ROUTE	SECTION	SECTION NUMBER	SHEET	SHEETS
CH17 CH53 CH67	55 125 146	15-00999-18-RS	91	128

FILE NAME: U:\Design\Structs\15-00999-18-RS 21st Street Resurfacing US1 to Kenosha Rd\Details\B-00999Sheet_009LC_Details.dgn

ABV	ABOVE
A/C	ACCESS CONTROL
AC	ACRE
ADJ	ADJUST
AS	AERIAL SURVEYS
AGG	AGGREGATE
AH	AHEAD
APT	APARTMENT
ASPH	ASPHALT
AUX	AUXILIARY
AGS	AUXILIARY GAS VALVE (SERVICE)
AVE	AVENUE
AX	AXIS OF ROTATION
BK	BACK
B-B	BACK TO BACK
BKPL	BACKPLATE
B	BARN
BARR	BARRICADE
BGN	BEGIN
BM	BENCHMARK
BIND	BINDER
BIT	BITUMINOUS
BTM	BOTTOM
BLVD	BOULEVARD
BRK	BRICK
BBOX	BUFFALO BOX
BLDG	BUILDING
CIP	CAST IRON PIPE
CB	CATCH BASIN
C-C	CENTER TO CENTER
CL	CENTERLINE OR CLEARANCE
CL-E	CENTERLINE TO EDGE
CL-F	CENTERLINE TO FACE
CTS	CENTERS
CERT	CERTIFIED
CHSLD	CHISELED
CS	CITY STREET
CP	CLAY PIPE
CLSD	CLOSED
CLID	CLOSED LID
CT	COAT OR COURT
COMB	COMBINATION
C	COMMERCIAL BUILDING
CE	COMMERCIAL ENTRANCE
CONC	CONCRETE
CONST	CONSTRUCT
CONTD	CONTINUED
CONT	CONTINUOUS
COR	CORNER
CORR	CORRUGATED
CMP	CORRUGATED METAL PIPE
CNTY	COUNTY
CH	COUNTY HIGHWAY
CSE	COURSE
XSECT	CROSS SECTION
m^3	CUBIC METER
mm^3	CUBIC MILLIMETER
CU YD	CUBIC YARD
CULV	CULVERT
C&G	CURB & GUTTER
D	DEGREE OF CURVE
DC	DEPRESSED CURVE
DET	DETECTOR
DIA	DIAMETER
DIST	DISTRICT
DOM	DOMESTIC
DBL	DOUBLE
DSEL	DOWNSTREAM ELEVATION
DSFL	DOWNSTREAM FLOWLINE
DR	DRAINAGE OR DRIVE
DI	DRAINAGE INLET OR DROP INLET
DRV	DRIVEWAY
DCT	DUCT
EA	EACH
EB	EASTBOUND
EOP	EDGE OF PAVEMENT
E-CL	EDGE TO CENTERLINE
E-E	EDGE TO EDGE
EL	ELEVATION
ENTR	ENTRANCE
EXC	EXCAVATION
EX	EXISTING
EXPWAY	EXPRESSWAY
E	EXTERNAL DISTANCE OF HORIZONTAL CURVE
E	OFFSET DISTANCE TO VERTICAL CURVE
F-F	FACE TO FACE
FA	FEDERAL AID
FAI	FEDERAL AID INTERSTATE
FAP	FEDERAL AID PRIMARY
FAS	FEDERAL AID SECONDARY
FAUS	FEDERAL AID URBAN SECONDARY
FP	FENCE POST
FE	FIELD ENTRANCE
FH	FIRE HYDRANT
FL	FLOW LINE
FB	FOOT BRIDGE
FDN	FOUNDATION
FR	FRAME
F&G	FRAME & GRATE
FRWAY	FREEWAY
GAL	GALLON
GALV	GALVANIZED
G	GARAGE
GM	GAS METER
GV	GAS VALVE
GRAN	GRANULAR
GR	GRATE
GRVL	GRAVEL
GND	GROUND
GUT	GUTTER
GP	GUY POLE
GW	GUY WIRE
HH	HANDHOLE
HATCH	HATCHING
HD	HEAD
HDW	HEADWALL
HDUTY	HEAVY DUTY
ha	HECTARE
HMA	HOT MIX ASPHALT
HWY	HIGHWAY
HORIZ	HORIZONTAL
HSE	HOUSE
IL	ILLINOIS
IMP	IMPROVEMENT
IN DIA	INCH DIAMETER
INL	INLET
INST	INSTALLATION
IDS	INTERSECTION DESIGN STUDY
INV	INVERT
IP	IRON PIPE
IR	IRON ROD
JT	JOINT
kg	KILOGRAM
km	KILOMETER
LS	LANDSCAPING
LN	LANE
LT	LEFT
LP	LIGHT POLE
LGT	LIGHTING
LF	LINEAL FEET OR LINEAR FEET
L	LITER OR CURVE LENGTH
LC	LONG CHORD
LNG	LONGITUDINAL
L SUM	LUMP SUM
MACH	MACHINE
MB	MAIL BOX
MH	MANHOLE
MATL	MATERIAL
MED	MEDIAN
m	METER
METH	METHOD
M	MID-ORDINATE
mm	MILLIMETER
mm DIA	MILLIMETER DIAMETER
MIX	MIXTURE
MBH	MOBILE HOME
MOD	MODIFIED
MFT	MOTOR FUEL TAX
N & BC	NAIL & BOTTLE CAP
N & C	NAIL & CAP
N & W	NAIL & WASHER
NOAA	NATIONAL OCEANIC ATMOSPHERIC ADMINISTRATION
NC	NORMAL CROWN
NB	NORTHBOUND
NE	NORTHEAST
NW	NORTHWEST
OLID	OPEN LID
PAT	PATTERN
PVD	PAVED
PVMT	PAVEMENT
PM	PAVEMENT MARKING
PED	PEDESTAL
PNT	POINT
PC	POINT OF CURVATURE
PI	POINT OF INTERSECTION OF HORIZONTAL CURVE
PRC	POINT OF REVERSE CURVE
PT	POINT OF TANGENCY
POT	POINT ON TANGENT
POLYETH	POLYETHYLENE
PCC	PORTLAND CEMENT CONCRETE
PP	POWER POLE OR PRINCIPAL POINT
PRM	PRIME
PE	PRIVATE ENTRANCE
PROF	PROFILE
PGL	PROFILE GRADELINE
PROJ	PROJECT
P.C.	PROPERTY CORNER
PL	PROPERTY LINE
PR	PROPOSED
R	RADIUS
RR	RAILROAD
RRS	RAILROAD SPIKE
RPS	REFERENCE POINT STAKE
REF	REFLECTIVE
RCCP	REINFORCED CONCRETE CULVERT PIPE
REINF	REINFORCEMENT
REM	REMOVAL
RC	REMOVE CROWN
REP	REPLACEMENT
REST	RESTAURANT
RESURF	RESURFACING
RET	RETAINING
RT	RIGHT
ROW	RIGHT-OF-WAY
RD	ROAD
RDWY	ROADWAY
RTE	ROUTE
SAN	SANITARY
SANS	SANITARY SEWER
SEC	SECTION
SEED	SEEDING
SHAP	SHAPING
S	SHED
SH	SHEET
SHLD	SHOULDER
SW	SIDEWALK OR SOUTHWEST
SIG	SIGNAL
SOD	SODDING
SM	SOLID MEDIAN
SB	SOUTHBOUND
SE	SOUTHEAST
SPL	SPECIAL
SD	SPECIAL DITCH
SQ FT	SQUARE FEET
m^2	SQUARE METER
mm^2	SQUARE MILLIMETER
SQ YD	SQUARE YARD
STB	STABILIZED
STD	STANDARD
SBI	STATE BOND ISSUE
SR	STATE ROUTE
STA	STATION
SPBGR	STEEL PLATE BEAM GUARDRAIL
SS	STORM SEWER
STY	STORY
ST	STREET
STR	STRUCTURE
e	SUPERELEVATION RATE
S.E. RUN.	SUPERELEVATION RUNOFF LENGTH
SURF	SURFACE
SMK	SURVEY MARKER
T	TANGENT DISTANCE
T.R.	TANGENT RUNOUT DISTANCE
TEL	TELEPHONE
TB	TELEPHONE BOX
TP	TELEPHONE POLE
TEMP	TEMPORARY
TBM	TEMPORARY BENCH MARK
TD	TILE DRAIN
TBE	TO BE EXTENDED
TBR	TO BE REMOVED
TBS	TO BE SAVED
TWP	TOWNSHIP
TR	TOWNSHIP ROAD
TS	TRAFFIC SIGNAL
TSCB	TRAFFIC SIGNAL CONTROL BOX
TSC	TRAFFIC SYSTEMS CENTER
TRVS	TRANSVERSE
TRVL	TRAVEL
TRN	TURN
TY	TYPE
T-A	TYPE A
TYP	TYPICAL
UNDGND	UNDERGROUND
USGS	U.S. GEOLOGICAL SURVEY
USEL	UPSTREAM ELEVATION
USFL	UPSTREAM FLOWLINE
UTIL	UTILITY
VBOX	VALVE BOX
VV	VALVE VAULT
VLT	VAULT
VEH	VEHICLE
VP	VENT PIPE
VERT	VERTICAL
VC	VERTICAL CURVE
VPC	VERTICAL POINT OF CURVATURE
VPI	VERTICAL POINT OF INTERSECTION
VPT	VERTICAL POINT OF TANGENCY
WM	WATER METER
WV	WATER VALVE
WMAIN	WATER MAIN
WB	WESTBOUND
WILDFL	WILDFLOWERS
W	WITH
WO	WITHOUT

Illinois Department of Transportation

PASSED January 1, 2011

Michael Brand

ENGINEER OF POLICY AND PROCEDURES

APPROVED January 1, 2011

ENGINEER OF DESIGN AND ENVIRONMENT

ISSUED 1-1-97

DATE	REVISIONS
1-1-11	Updated abbreviations
	and symbols.
1-1-08	Updated abbreviations
	and symbols.

STANDARD SYMBOLS, ABBREVIATIONS AND PATTERNS

(Sheet 1 of 8)

STANDARD 000001–06

ADJUSTMENT ITEMS

	EX	PR
Structure To Be Adjusted		ADJ
Structure To Be Cleaned		C
Main Structure To Be Filled		FM
Structure To Be Filled		F
Structure To Be Filled Special		FSP
Structure To Be Removed		R
Structure To Be Reconstructed		REC
Structure To Be Reconstructed Special		RSP
Frame and Grate To Be Adjusted		A
Frame and Lid To Be Adjusted		A
Domestic Service Box To Be Adjusted		A
Valve Vault To Be Adjusted		A
Special Adjustment		SP
Item To Be Abandoned		AB
Item To Be Moved		M
Item To Be Relocated		REL
Pavement Removal and Replacement		

Illinois Department of Transportation

PASSED January 1, 2011
Michael Brand
ENGINEER OF POLICY AND PROCEDURES

APPROVED January 1, 2011
Scott Bennett
ENGINEER OF DESIGN AND ENVIRONMENT

ISSUED 1-1-97

ALIGNMENT ITEMS

	EX	PR
Baseline		
Centerline		
Centerline Break Circle		
Baseline Symbol		
Centerline Symbol		
PI Indicator		
Point Indicator		
Horizontal Curve Data (Half Size)	CURVE P.I. STA= Δ= D= R= T= L= E= e= T.R.= S.E. RUN= P.C. STA= P.T. STA=	CURVE P.I. STA= Δ= D= R= T= L= E= e= T.R.= S.E. RUN= P.C. STA= P.T. STA=

BOUNDARIES ITEMS

	EX	PR
Dashed Property Line		
Solid Property/Lot Line		
Section/Grant Line		
Quarter Section Line		
Quarter/Quarter Section Line		
County/Township Line		
State Line		
Iron Pipe Found		
Iron Pipe Set		
Survey Marker		
Property Line Symbol		
Same Ownership Symbol (Half Size)		
Northwest Quarter Corner (Half Size)		
Section Corner (Half Size)		
Southeast Quarter Corner (Half Size)		

CONTOUR ITEMS

	EX	PR
Approx. Index Line		
Approx. Intermediate Line		
Index Contour		
Intermediate Contour		

DRAINAGE ITEMS

	EX	PR
Channel or Stream Line		
Culvert Line		
Grading & Shaping Ditches		
Drainage Boundary Line		
Paved Ditch		
Aggregate Ditch		
Pipe Underdrain		
Storm Sewer		
Flowline		
Ditch Check		
Headwall		
Inlet		
Manhole		
Summit		
Roadway Ditch Flow		
Swale		
Catch Basin		
Culvert End Section		
Water Surface Indicator		
Riprap		

STANDARD SYMBOLS, ABBREVIATIONS AND PATTERNS

(Sheet 2 of 8)

STANDARD 000001-06

EROSION & SEDIMENT CONTROL ITEMS

	EX	PR
Cleaning & Grading Limits		
Dike		
Erosion Control Fence		
Perimeter Erosion Barrier		
Temporary Fence		
Ditch Check Temporary		
Ditch Check Permanent		
Inlet & Pipe Protection		
Sediment Basin		
Erosion Control Blanket		
Fabric Formed Concrete Revetment Mat		
Turf Reinforcement Mat		
Mulch Temporary		
Mulch Method 1		
Mulch Method 2 Stabilized		
Mulch Method 3 Hydraulic		

NON–HIGHWAY IMPROVEMENT ITEMS

	EX	PR
Noise Attn./Levee		
Field Line		
Fence		
Base of Levee		
Mailbox		
Multiple Mailboxes		
Pay Telephone		
Advertising Sign		

LANDSCAPING ITEMS

	EX	PR
Contour Mounding Line		
Fence		
Fence Post		
Shrubs		
Mowline		
Perennial Plants		
Seeding Class 2		
Seeding Class 2A		
Seeding Class 4		
Seeding Class 4 & 5 Combined		

EXISTING LANDSCAPING ITEMS (contd.)

	EX	PR
Seeding Class 5		
Seeding Class 7		
Seedlings Type 1		
Seedlings Type 2		
Sodding		
Mowstake w/Sign		
Tree Trunk Protection		
Evergreen Tree	E	
Shade Tree	E	+

LIGHTING

	EX	PR
Duct		
Conduit		
Electrical Aerial Cable	A	A
Electrical Buried Cable	L	L
Controller		
Underpass Luminaire		
Power Pole		

Illinois Department of Transportation

PASSED January 1, 2011

Michael Brand
ENGINEER OF POLICY AND PROCEDURES

APPROVED January 1, 2011

ENGINEER OF DESIGN AND ENVIRONMENT

ISSUED 1-1-97

STANDARD SYMBOLS, ABBREVIATIONS AND PATTERNS

(Sheet 3 of 8)

STANDARD 000001–06

LIGHTING (contd.)

	EX	PR
Pull Point		
Handhole		
Heavy Duty Handhole		
Junction Box		
Light Unit Comb.		
Electrical Ground		
Traffic Flow Arrow		
High Mast Pole (Half Size)		
Light Unit-1		

PAVEMENT (MISC.)

	EX	PR
Keyed Long. Joint		
Keyed Long. Joint w/Tie Bars		
Sawed Long. Joint w/Tie Bars		
Bituminous Shoulder		
Bituminous Taper		
Stabilized Driveway		
Widening		

PAVEMENT MARKINGS

	EX	PR
Bike Lane Symbol		
Bike Lane Text		BIKE LANE
Handicap Symbol		
RR Crossing		RR
Raised Marker Amber 1 Way		
Raised Marker Amber 2 Way		
Raised Marker Crystal 1 Way		
Two Way Turn Left		
Shoulder Diag. Pattern		
Skip-Dash White		
Skip-Dash Yellow		
Stop Line		
Solid Line		
Double Centerline		
Dotted Lines		
CL 2Ln 2Way RRPM 12.2 m (40') o.c.		
CL 2Ln 2Way RRPM 80' (24.4 m) o.c.		
CL Multilane Div. RRPM 40' (12.2 m) o.c.		
CL Multilane Div. RRPM 80' (24.4 m) o.c.		
CL Multilane Div. Dbl. RRPM 80' (24.4 m) o.c.		
CL Multilane Undiv.		
Two Way Turn Left Line		

Illinois Department of Transportation

PASSED January 1, 2011
Michael Brand
ENGINEER OF POLICY AND PROCEDURES

APPROVED January 1, 2011
Scott E. Stokes
ENGINEER OF DESIGN AND ENVIRONMENT

ISSUED 1-1-97

STANDARD SYMBOLS, ABBREVIATIONS AND PATTERNS

(Sheet 4 of 8)

STANDARD 000001–06

PAVEMENT MARKINGS (contd.)

	EX	PR
Urban Combination Left		
Urban Combination Right		
Urban Left Turn Arrow		
Urban Right Turn Arrow		
Urban Left Turn Only		ONLY
Urban Right Turn Only		ONLY
Urban Thru Only		ONLY
Urban U-Turn		
Urban Combined U-Turn		
Rural Combination Left		
Rural Combination Right		
Rural Left Turn Arrow		
Rural Right Turn Arrow		
Rural Left Turn Only		ONLY
Rural Right Turn Only		ONLY
Rural Thru Only		ONLY

RAILROAD ITEMS

	EX	PR
Abandoned Railroad		
Railroad		
Railroad Point		
Control Box		
Crossing Gate		
Flashing Signal		
Railroad Cant. Mast Arm		
Crossbuck		

REMOVAL ITEMS

	EX	PR
Removal Tic		
Bituminous Removal		
Hatch Pattern		
Tree Removal Single		

RIGHT OF WAY ITEMS

	EX	PR
Future ROW Corner Monument		
ROW Marker		
ROW Line		
Easement		
Temporary Easement		

Illinois Department of Transportation

PASSED January 1, 2011

Michael Brand
ENGINEER OF POLICY AND PROCEDURES

APPROVED January 1, 2011

Scott E. Stokes
ENGINEER OF DESIGN AND ENVIRONMENT

ISSUED 1-1-97

STANDARD SYMBOLS, ABBREVIATIONS AND PATTERNS

(Sheet 5 of 8)

STANDARD 000001–06

RIGHT OF WAY ITEMS (contd.)

	EX	PR
Access Control Line	AC	AC
Access Control Line & ROW	AC	AC
Access Control Line & ROW with Fence	AR	AC
Excess ROW Line		XS

ROADWAY PLAN ITEMS

	EX	PR
Cable Barrier		
Concrete Barrier		
Edge of Pavement		
Bit Shoulders, Medians and C&G Line		
Aggregate Shoulder		
Sidewalks, Driveways		
Guardrail		
Guardrail Post		
Traffic Sign		
Corrugated Median		
Impact Attenuator		
North Arrow with District Office (Half Size)	N	
Match Line		STA. 45+00
Slope Limit Line		
Typical Cross-Section Line		

ROADWAY PROFILES

	EX	PR
P.I. Indicator		
Point Indicator		
Earthworks Balance Point		
Begin Point		
Vert. Curve Data	VPI = ELEV= L = E =	VPI = ELEV= L = E =
Ditch Profile Left Side		
Ditch Profile Right Side		
Roadway Profile Line		
Storm Sewer Profile Left Side		
Storm Sewer Profile Right Side		

SIGNING ITEMS

	EX	PR
Cone, Drum or Barricade		
Barricade Type II		
Barricade Type III		
Barricade With Edge Line		
Flashing Light Sign		
Panels I		
Panels II		
Direction of Traffic		
Sign Flag (Half Size)		

SIGNING ITEMS (contd.)

	EX	PR
Reverse Left W1-4L (Half Size)		
Reverse Right W1-4R (Half Size)		
Two Way Traffic Sign W6-3 (Half Size)		
Detour Ahead W20-2(0) (Half Size)		DETOUR AHEAD
Left Lane Closed Ahead W20-5L(0) (Half Size)		LEFT LANE CLOSED AHEAD
Right Lane Closed Ahead W20-5R(0) (Half Size)		RIGHT LANE CLOSED AHEAD
Road Closed Ahead W20-3(0) (Half Size)		ROAD CLOSED AHEAD
Road Construction Ahead W20-1-(0) (Half Size)		ROAD CONSTRUCTION AHEAD
Single Lane Ahead (Half Size)		SINGLE LANE AHEAD
Transition Left W4-2L (Half Size)		
Transition Right W4-2R (Half Size)		

Illinois Department of Transportation

PASSED January 1, 2011
Michael Brand
ENGINEER OF POLICY AND PROCEDURES

APPROVED January 1, 2011
ENGINEER OF DESIGN AND ENVIRONMENT

ISSUED 1-1-97

STANDARD SYMBOLS, ABBREVIATIONS AND PATTERNS

(Sheet 6 of 8)

STANDARD 000001–06

SIGNING ITEMS (contd.)

	EX	PR
One Way Arrow Lrg. W1-6-(0) (Half Size)		
Two Way Arrow Large W1-7-(0) (Half Size)		
Detour M4-10L-(0) (Half Size)		DETOUR
Detour M4-10R-(0) (Half Size)		DETOUR
One Way Left R6-1L (Half Size)		ONE WAY
One Way Right R6-1R (Half Size)		ONE WAY
Left Turn Lane R3-I100L (Half Size)		LEFT TURN LANE
Keep Left R4-7AL (Half Size)		KEEP LEFT
Keep Left R4-7BL (Half Size)		KEEP LEFT
Keep Right R4-7AR (Half Size)		KEEP RIGHT
Keep Right R4-7BR (Half Size)		KEEP RIGHT
Stop Here On Red R10-6-AL (Half Size)		STOP HERE ON RED
Stop Here On Red R10-6-AR (Half Size)		STOP HERE ON RED
No Left Turn R3-2 (Half Size)		
No Right Turn R3-1 (Half Size)		
Road Closed R11-2 (Half Size)		ROAD CLOSED
Road Closed Thru Traffic R11-2 (Half Size)		ROAD CLOSED TO THRU TRAFFIC

STRUCTURES ITEMS

	EX	PR
Box Culvert Barrel		
Box Culvert Headwall		
Bridge Pier		
Bridge		
Retaining Wall		
Temporary Sheet Piling		

TRAFFIC SHEET ITEMS

	EX	PR
Cable Number		
Left Turn Green	G	G
Left Turn Yellow	Y	Y
Signal Backplate		
Signal Section 8" (200 mm)		
Signal Section 12" (300 mm)		
Walk/Don't Walk Letters	DW W	DW W
Walk/Don't Walk Symbols		

TRAFFIC SIGNAL ITEMS

	EX	PR
Galv. Steel Conduit		
Underground Cable		
Detector Loop Line		
Detector Loop Large		
Detector Loop Small		
Detector Loop Quadrapole		

Illinois Department of Transportation

PASSED January 1, 2011

Michael Brand

ENGINEER OF POLICY AND PROCEDURES

APPROVED January 1, 2011

ENGINEER OF DESIGN AND ENVIRONMENT

ISSUED 1-1-97

STANDARD SYMBOLS, ABBREVIATIONS AND PATTERNS

(Sheet 7 of 8)

STANDARD 000001–06

TRAFFIC SIGNAL ITEMS (contd.)

	EX	PR
Detector Raceway	"E"	
Aluminum Mast Arm		
Steel Mast Arm		
Veh. Detector Magnetic		
Conduit Splice		
Controller		
Gulfbox Junction		
Wood Pole		
Temp. Signal Head		
Handhole		
Double Handhole		
Heavy Duty Handhole	H	H
Junction Box		
Ped. Pushbutton Detector		
Ped. Signal Head		
Power Pole Service		
Priority Veh. Detector		
Signal Head		
Signal Head w/Backplate		
Signal Post		
Closed Circuit TV	C	C
Video Detector System	V	V

Illinois Department of Transportation

PASSED January 1, 2011
Michael Brand
ENGINEER OF POLICY AND PROCEDURES

APPROVED January 1, 2011
ENGINEER OF DESIGN AND ENVIRONMENT

ISSUED 1-1-97

UNDERGROUND UTILITY ITEMS

	EX	PR	ABANDONED
Cable TV	CTV	CTV	CTV
Electric Cable	E	E	E
Fiber Optic	FO	FO	FO
Gas Pipe	G	G	G
Oil Pipe	O	O	O
Sanitary Sewer			
Telephone Cable	T	T	T
Water Pipe	W	W	W

UTILITIES ITEMS

	EX	PR
Controller		
Double Handhole		
Fire Hydrant		
GuyWire or Deadman Anchor		
Handhole		
Heavy Duty Handhole	H	H
Junction Box		
Light Pole		
Manhole		
Pipeline Warning Sign		
Power Pole		
Power Pole with Light		
Sanitary Sewer Cleanout		
Splice Box Above Ground		
Telephone Splice Box Above Ground		
Telephone Pole		

UTILITY ITEMS (contd.)

	EX	PR
Traffic Signal		
Traffic Signal Control Box	TS	
Water Meter		
Water Meter Valve Box		
Profile Line		
Aerial Power Line	A A	A A

VEGETATION ITEMS

	EX	PR
Deciduous Tree		
Bush or Shrub		
Evergreen Tree		
Stump		
Orchard/Nursery Line		
Vegetation Line		
Woods & Bush Line		

WATER FEATURE ITEMS

	EX	PR
Stream or Drainage Ditch		
Waters Edge		
Water Surface Indicator		
Water Point		
Disappearing Ditch		
Marsh		
Marsh/Swamp Boundary		

STANDARD SYMBOLS, ABBREVIATIONS AND PATTERNS

(Sheet 8 of 8)

STANDARD 000001-06

CLASS C

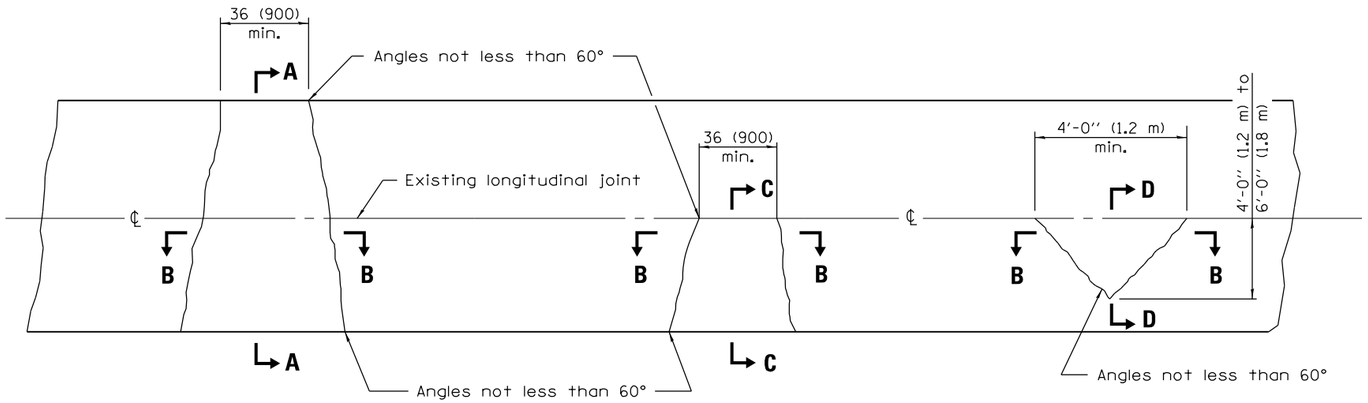

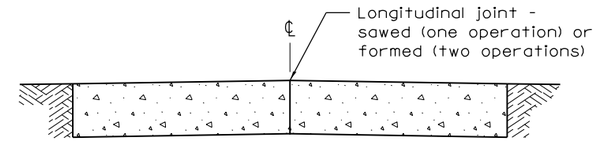

SECTION A–A

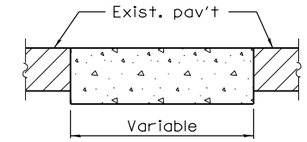

SECTION B–B

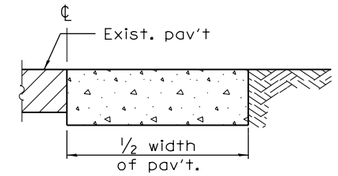

SECTION C–C

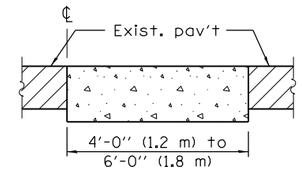

SECTION D–D

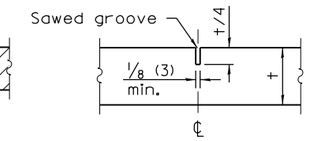

DETAIL OF SAWED CONTRACTION JOINT

Note:
Longitudinal joints shall be as detailed on Standard 420001, except tie bars are not required for patches 20'-0" (6.0 m) or less in length.

CLASS D

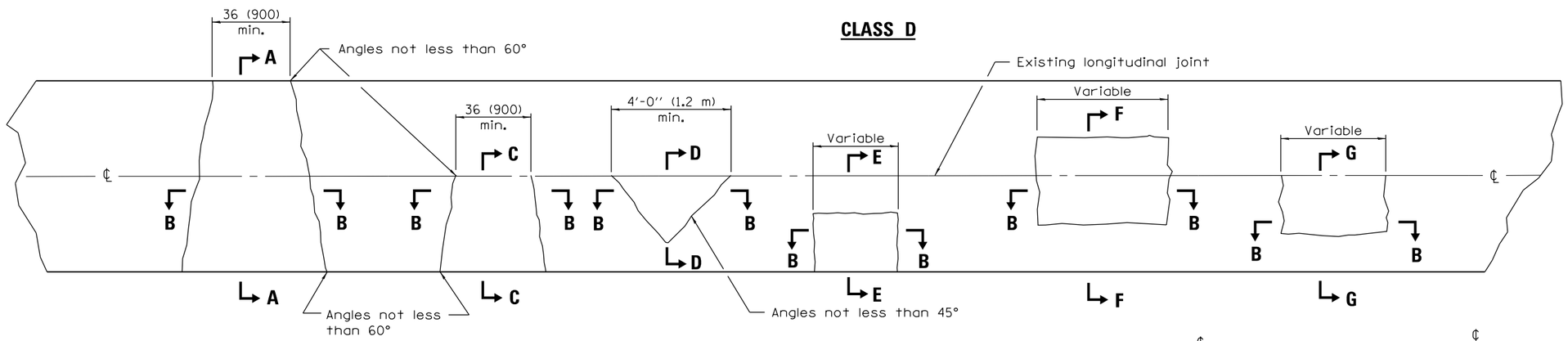

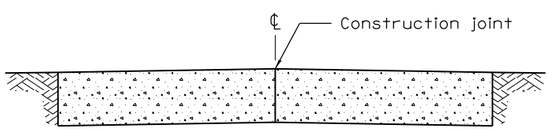

SECTION A–A
(Built in two operations)

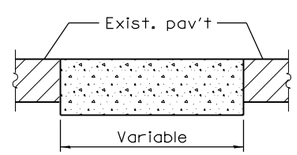

SECTION B–B

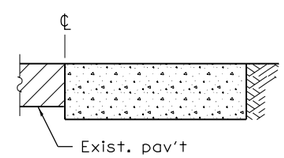

SECTION C–C

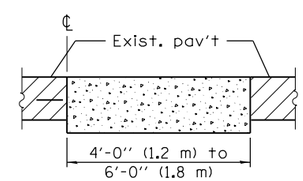

SECTION D–D

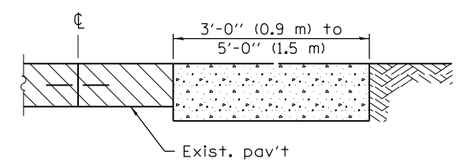

SECTION E–E

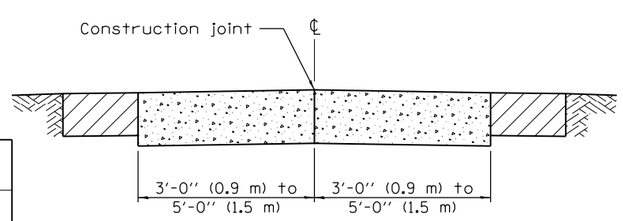

SECTION F–F
(Built in two operations)

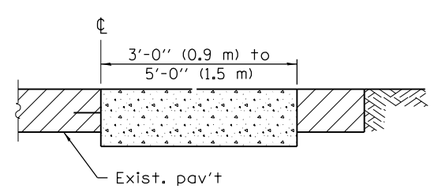

SECTION G–G

GENERAL NOTES

Existing tie bars shall be either cut or removed. Marginal bars shall be cut.

All dimensions are in inches (millimeters) unless otherwise shown.

Illinois Department of Transportation

PASSED January 1, 2008
ENGINEER OF POLICY AND PROCEDURES
APPROVED January 1, 2008
ENGINEER OF DESIGN AND ENVIRONMENT

ISSUED 1-1-97

DATE	REVISIONS
1-1-08	Switched units to
	English (metric).
1-1-07	Revised Note for
	Class C patches.

CLASS C and D PATCHES

STANDARD 442201–03

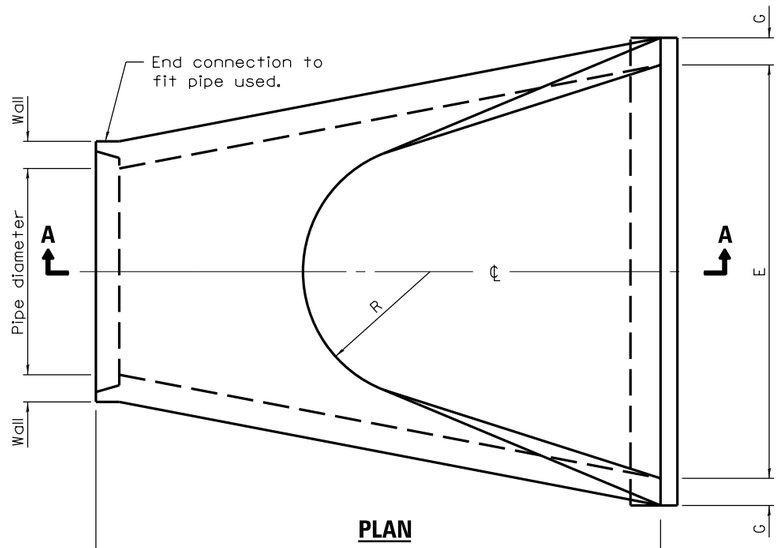

PLAN

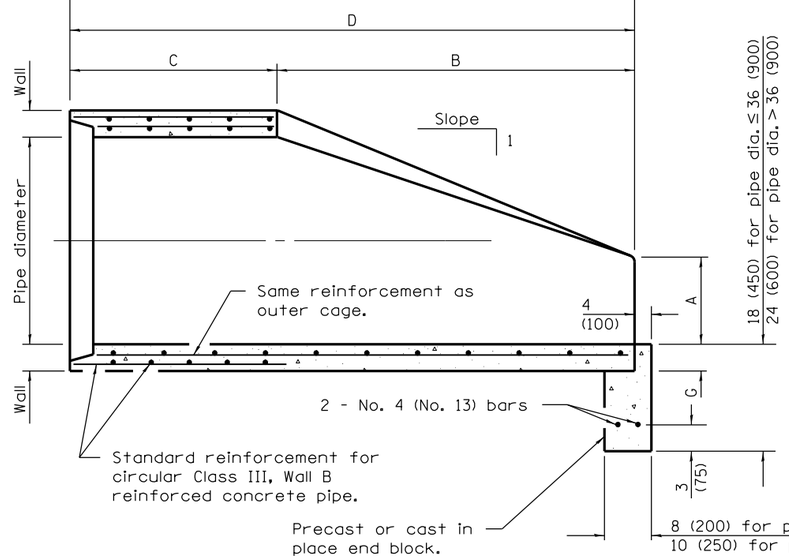

SECTION A–A

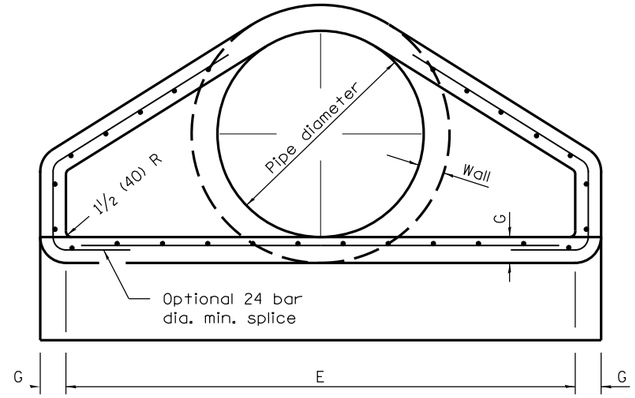

END VIEW

PIPE DIA.	APPROX. QTY. lbs. (kg)	WALL	A	B	C	D	E	G	R	APPROX. SLOPE
12 (300)	530 (240)	2 (51)	4 (102)	24 (610)	4′-0⅞″ (1.241 m)	6′-0⅞″ (1.851 m)	24 (610)	2 (51)	9 (229)	1:2.4
15 (375)	740 (335)	2¼ (57)	6 (152)	27 (686)	3′-10″ (1.168 m)	6′-1″ (1.854 m)	30 (762)	2¼ (57)	11 (280)	1:2.4
18 (450)	990 (450)	2½ (64)	9 (229)	27 (686)	3′-10″ (1.168 m)	6′-1″ (1.854 m)	36 (914)	2½ (64)	12 (305)	1:2.4
21 (525)	1280 (580)	2¾ (70)	9 (229)	35 (889)	38 (965)	6′-1″ (1.854 m)	3′-6″ (1.067 m)	2¾ (70)	13 (330)	1:2.4
24 (600)	1520 (690)	3 (76)	9½ (241)	3′-7½″ (1.105 m)	30 (762)	6′-1½″ (1.867 m)	4′-0″ (1.219 m)	3 (76)	14 (356)	1:2.5
27 (675)	1930 (875)	3¼ (83)	10½ (267)	4′-0″ (1.219 m)	25½ (648)	6′-1½″ (1.867 m)	4′-6″ (1.372 m)	3¼ (83)	14½ (368)	1:2.4
30 (750)	2190 (995)	3½ (89)	12 (305)	4′-6″ (1.375 m)	19¾ (502)	6′-1¾″ (1.874 m)	5′-0″ (1.524 m)	3½ (89)	15 (381)	1:2.5
33 (825)	3200 (1450)	3¾ (95)	13½ (343)	4′-10½″ (1.486 m)	39¼ (997)	8′-1¾″ (2.483 m)	5′-6″ (1.676 m)	3¾ (95)	17½ (445)	1:2.5
36 (900)	4100 (1860)	4 (102)	15 (381)	5′-3″ (1.6 m)	34¾ (883)	8′-1¾″ (2.483 m)	6′-0″ (1.829 m)	4 (102)	20 (508)	1:2.5
42 (1050)	5380 (2440)	4½ (114)	21 (533)	5′-3″ (1.6 m)	35 (889)	8′-2″ (2.489 m)	6′-6″ (1.981 m)	4½ (114)	22 (559)	1:2.5
48 (1200)	6550 (2970)	5 (127)	24 (610)	6′-0″ (1.829 m)	26 (660)	8′-2″ (2.489 m)	7′-0″ (2.134 m)	5 (127)	22 (559)	1:2.5
54 (1350)	8240 (3740)	5½ (140)	27 (686)	5′-5″ (1.651 m)	35 (889)	8′-4″ (2.54 m)	7′-6″ (2.286 m)	5½ (140)	24 (610)	1:2.0
60 (1500)	8730 (3960)	6 (152)	35 (889)	5′-0″ (1.524 m)	39 (991)	8′-3″ (2.515 m)	8′-0″ (2.438 m)	5 (127)	•	1:1.9
66 (1650)	10710 (4860)	6½ (165)	30 (762)	6′-0″ (1.829 m)	27 (686)	8′-3″ (2.515 m)	8′-6″ (2.591 m)	5½ (140)	•	1:1.7
72 (1800)	12520 (5680)	7 (178)	36 (914)	6′-6″ (1.981 m)	21 (533)	8′-3″ (2.514 m)	9′-0″ (2.743 m)	6 (152	•	1:1.8
78 (1950)	14770 (6700)	7½ (191)	36 (914)	7′-6″ (2.286 m)	21 (533)	9′-3″ (2.819 m)	9′-6″ (2.896 m)	6½ (165)	•	1:1.8
84 (2100)	18160 (8240)	8 (203)	36 (914)	7′-6½″ (2.299 m)	21 (533)	9′-3½″ (2.832 m)	10′-0″ (3.048 m)	6½ (165)	•	1:1.6

• Radius as furnished by manufacturer

GENERAL NOTES

All slope ratios are expressed as units of vertical displacement to units of horizontal displacement (V:H).

All dimensions are in inches (millimeters) unless otherwise shown.

Illinois Department of Transportation

APPROVED January 1, 2011
ENGINEER OF BRIDGES AND STRUCTURES

APPROVED January 1, 2011
ENGINEER OF DESIGN AND ENVIRONMENT

ISSUED 1-1-97

DATE	REVISIONS
1-1-11	Clarified ref. to pipe dia.
	on Section A-A. Changed
	'inner' to 'outer' cage ref.
1-1-09	Switched units to
	English (metric).

PRECAST REINFORCED CONCRETE FLARED END SECTION

STANDARD 542301–03

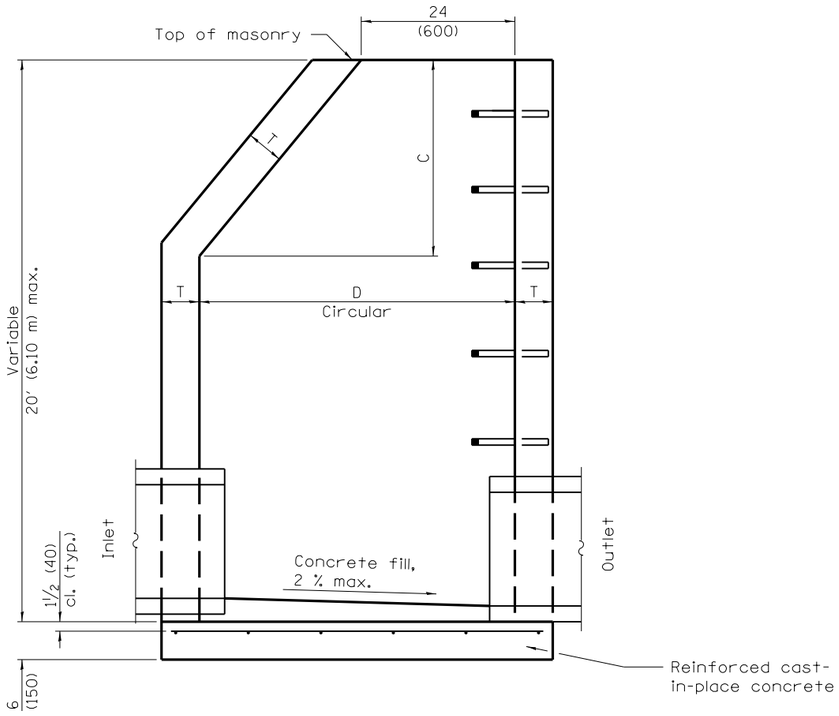

ELEVATION – ECCENTRIC

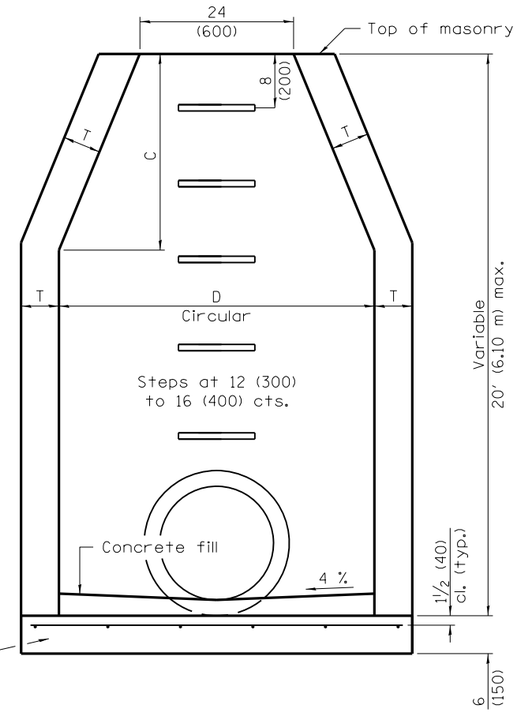

ELEVATION – CONCENTRIC

ALTERNATE MATERIALS FOR WALLS	D	C*	T (min.)
Concrete Masonry Unit	4'-0" (1.2 m) 5'-0" (1.5 m)	30 (750) 3'-9" (1.15 m)	5 (125) 5 (125)
Brick Masonry	4'-0" (1.2 m) 5'-0" (1.5 m)	30 (750) 3'-9" (1.15 m)	8 (200) 8 (200)
Precast Reinforced Concrete Section	4'-0" (1.2 m) 5'-0" (1.5 m)	30 (750) 3'-9" (1.15 m)	4 (100) 5 (125)
Cast-in-place Concrete	4'-0" (1.2 m) 5'-0" (1.5 m)	30 (750) 3'-9" (1.15 m)	6 (150) 6 (150)

* For precast reinforced concrete sections, dimension "C" may vary from the dimension given to plus 6 (150).

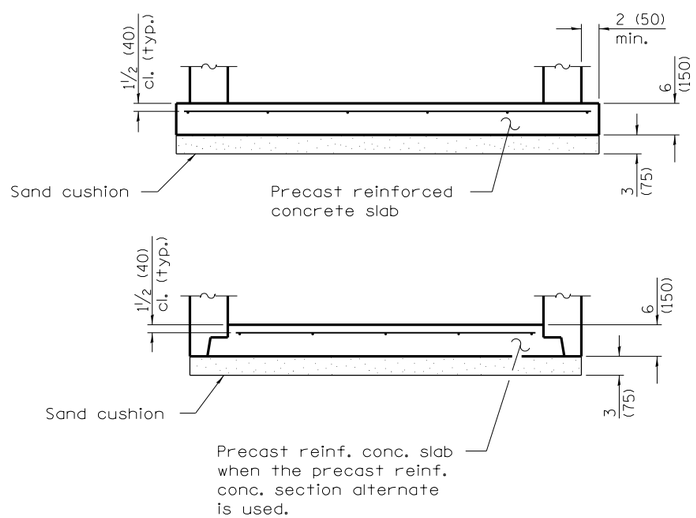

ALTERNATE BOTTOM SLAB

GENERAL NOTES

Bottom slabs shall be reinforced with a minimum of 0.31 sq. in./ft. (660 sq. mm/m) in both directions with a maximum spacing of 12 (300).

Bottom slabs may be connected to the riser as determined by the fabricator; however, only a single row of reinforcement around the perimeter may be utilized.

See Standard 602701 for details of steps.

See Standard 602601 for optional Precast Reinforced Concrete Flat Slab Top.

All dimensions are in inches (millimeters) unless otherwise shown.

Illinois Department of Transportation

PASSED January 1, 2011
Michael Brand
ENGINEER OF POLICY AND PROCEDURES
APPROVED January 1, 2011
ENGINEER OF DESIGN AND ENVIRONMENT

ISSUED 1-1-97

DATE	REVISIONS
1-1-11	Detailed rein. in slabs.
	Added max. limit to height.
	Revised general notes.
1-1-09	Switched units to
	English (metric).

MANHOLE TYPE A

STANDARD 602401–03

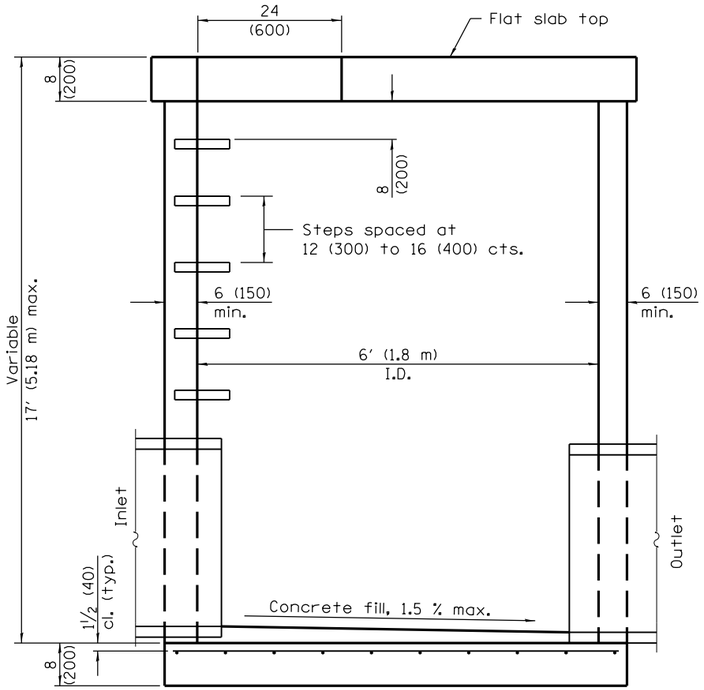

ELEVATION
(with flat slab top only)

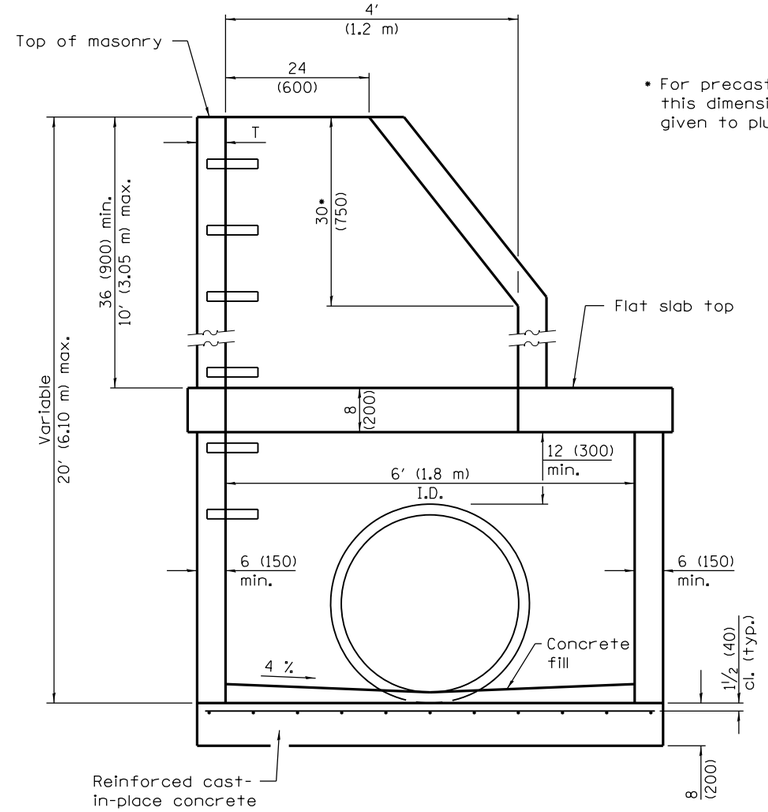

• For precast reinforced concrete sections, this dimension may vary from the dimension given to plus 6 (150).

ELEVATION
(with flat slab top and riser)

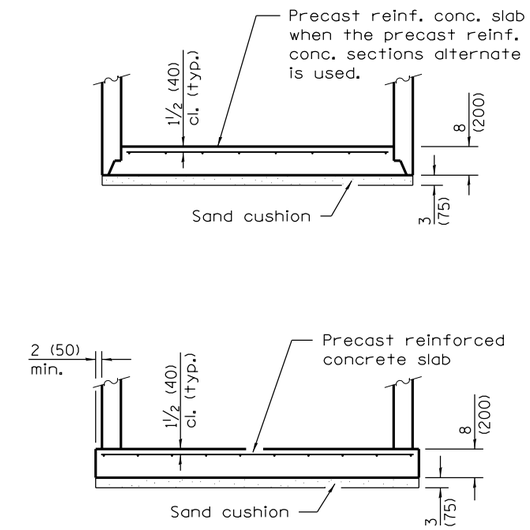

ALTERNATE BOTTOM SLABS

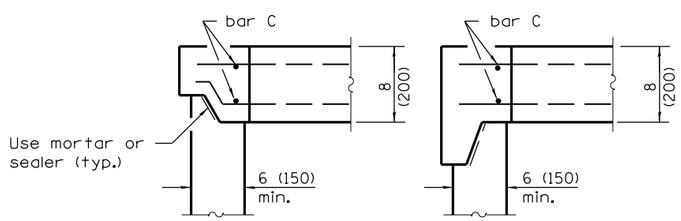

ALTERNATE JOINT CONFIGURATIONS

ALTERNATE MATERIALS FOR WALLS	T (min)
Concrete Masonry Units	5 (125)
Precast Reinforced Concrete Sections	4 (100)
Cast-in-Place Concrete	6 (150)

GENERAL NOTES

Joint configuration and dimensions of flat slab top shall match and fit the riser joint detail.

Bottom slabs shall be reinforced with a minimum of 0.29 sq. in./ft. (610 sq. mm /m) in both directions with a maximum spacing of 13 (330)

Bottom slabs may be connected to the riser as determined by the fabricator; however, only a single row of reinforcement around the perimeter may be utilized.

See Standard 602701 for details of manhole steps.

All dimensions are in inches (millimeters) unless otherwise shown.

Illinois Department of Transportation

PASSED April 1, 2016
Michael Brand
ENGINEER OF POLICY AND PROCEDURES
APPROVED April 1, 2016
ENGINEER OF DESIGN AND ENVIRONMENT

ISSUED 1-1-97

DATE	REVISIONS
4-1-16	Changed terminology to
	'welded wire reinforcement'.
1-1-14	Increased maximum heights.
	Revised General Notes.

MANHOLE TYPE A
6′ (1.8 m) DIAMETER

(Sheet 1 of 2)

STANDARD 602406–07

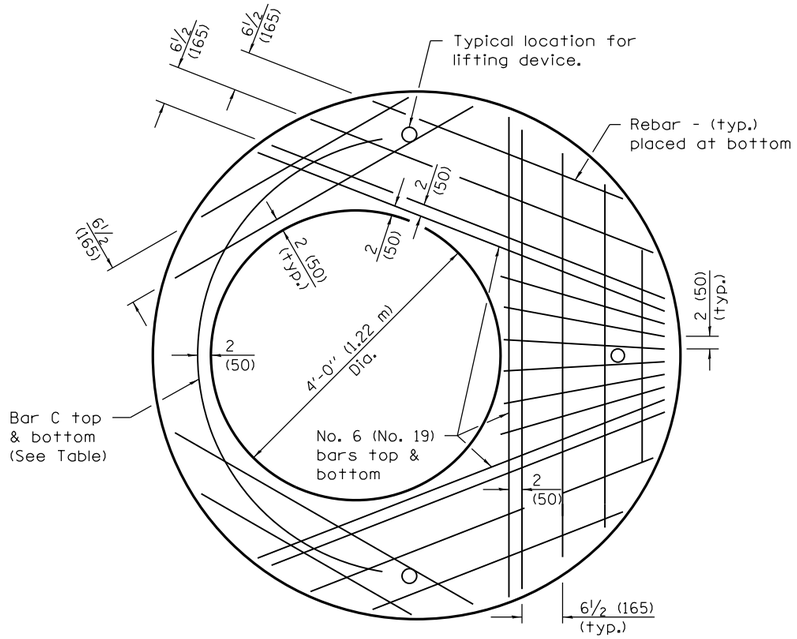

PLAN

Showing Rebar Reinforcement

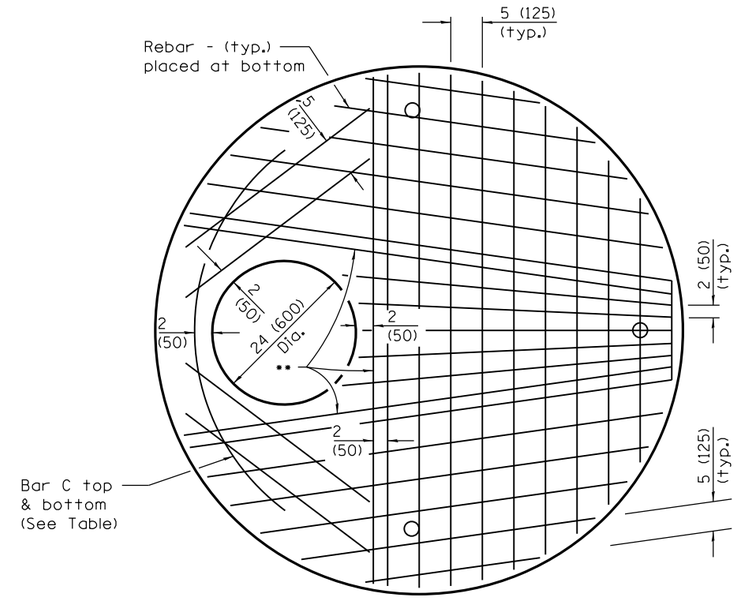

•• No. 6 (No. 19) bars top & bottom

Diameter of opening	Thickness	Reinforcement "As" WWR Each direction	Bar Size	No. 4 (No. 13) Bar C	
				Length	Radius
24 (600)	8 (200)	1.06 sq. in./ft. (2244 sq. mm/m)	No. 6 (No. 19)	6'-0" (1.83 m)	38 (965)
4'-0" (1.2 m)	8 (200)	0.82 sq. in./ft/ (1736 sq. mm/m)	No. 6 (No. 19)	9'-0" (2.74 m)	38 (965)

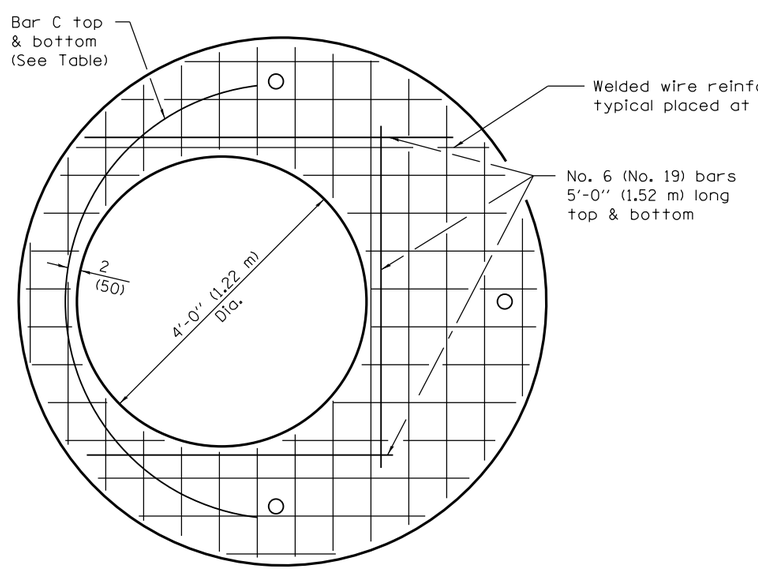

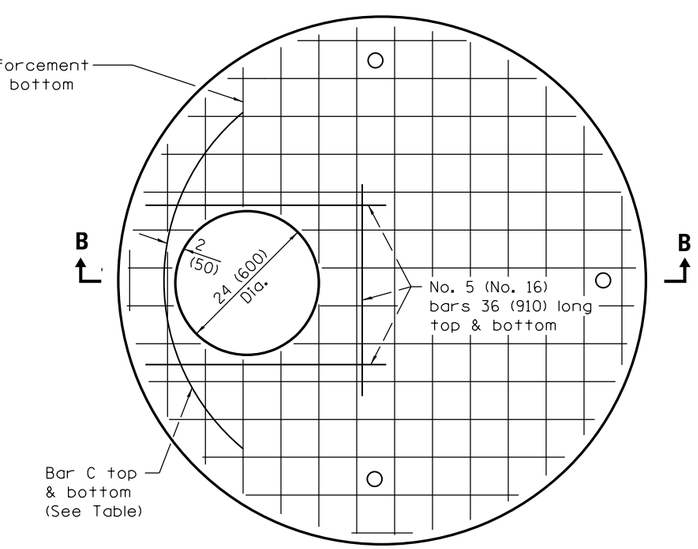

PLAN

Showing Welded Wire Fabric Reinforcement

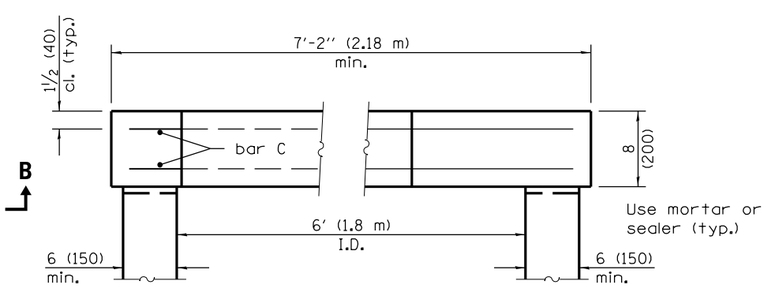

SECTION B–B

Illinois Department of Transportation

PASSED April 1, 2016

Michael Brand
ENGINEER OF POLICY AND PROCEDURES

APPROVED April 1, 2016

ENGINEER OF DESIGN AND ENVIRONMENT

ISSUED 1-1-97

MANHOLE TYPE A
6' (1.8 m) DIAMETER

(Sheet 2 of 2)

STANDARD 602406–07

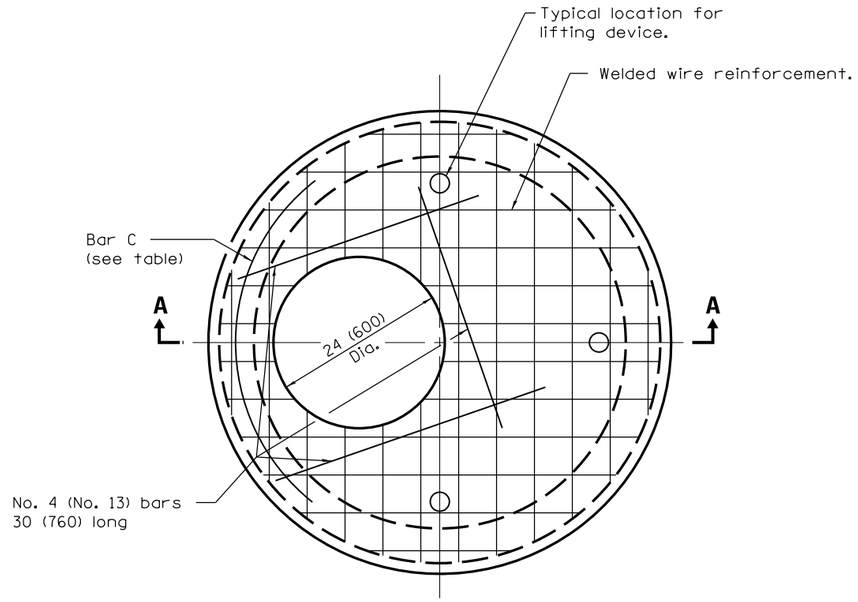

PLAN
(WELDED WIRE FABRIC)

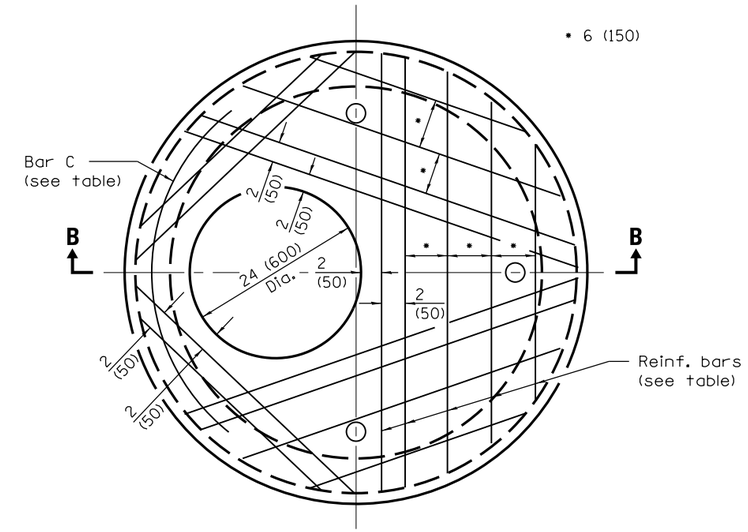

PLAN
(REINFORCEMENT BARS)

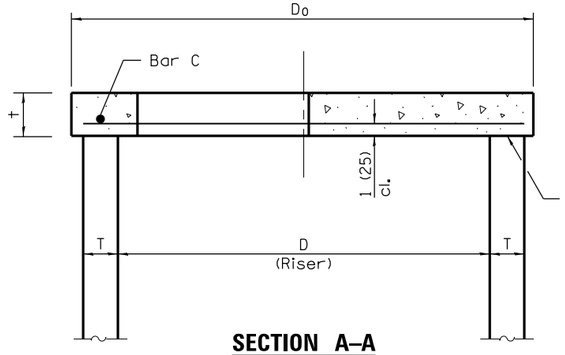

SECTION A–A

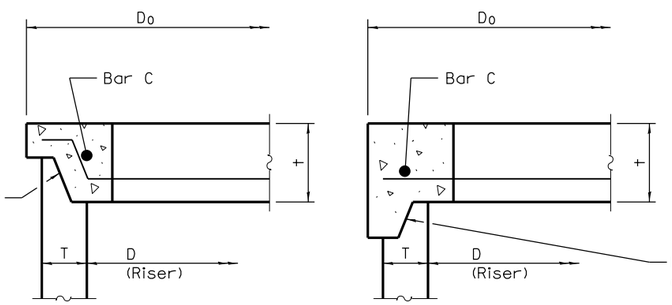

ALTERNATE JOINT CONFIGURATIONS

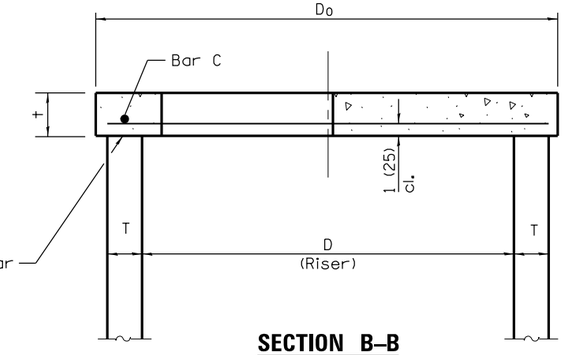

SECTION B–B

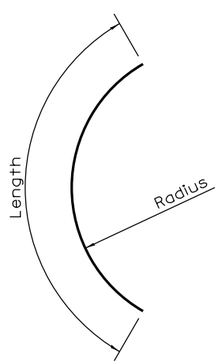

BAR C

GENERAL NOTES

The flat slab top may be used in lieu of the tapered tops shown on Standards 602001, 602011, 602016, 602306, 602401, or 602501 at the option of the Contractor or when field conditions prohibit the use of tapered tops.

All dimensions are in millimeters (inches) unless otherwise shown.

TABLE

D	T	D_o (min.)	t	Reinforcement "A_s" W.W.R. each direction	OR Bar size	No. 4 (No. 13) Bar C Length	Radius
36 (900)	See applicable Standards	D + 2T	6 (150)	0.20 sq. in./ft. (425 sq. mm/m)	No. 4 (No. 13)	4'-0" (1.2 m)	19 (480)
4'-0" (1.2 m)			6 (150)	0.35 sq. in./ft. (740 sq. mm/m)	No. 5 (No. 16)	4'-6" (1.35 m)	26 (660)
5'-0" (1.5 m)			8 (200)	0.35 sq. in./ft. (740 sq. mm/m)	No. 5 (No. 16)	5'-0" (1.5 m)	32 (810)

Illinois Department of Transportation

PASSED April 1, 2016
Michael Brand
ENGINEER OF POLICY AND PROCEDURES
APPROVED April 1, 2016
ENGINEER OF DESIGN AND ENVIRONMENT

ISSUED 1-1-97

DATE	REVISIONS
4-1-16	Changed terminology to 'welded wire reinforcement'.
1-1-14	Omitted detail for lifting hole or lifting loop.

PRECAST REINFORCED CONCRETE FLAT SLAB TOP

STANDARD 602601–04

CAST IRON STEPS

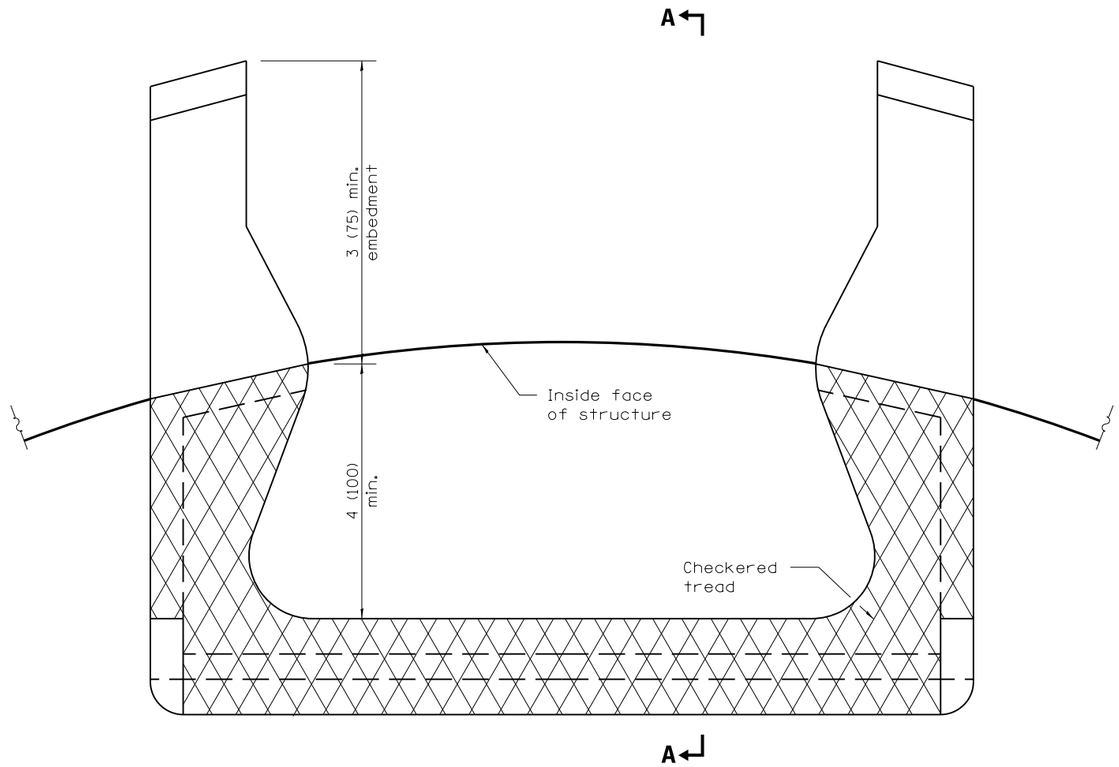

PLAN VIEW

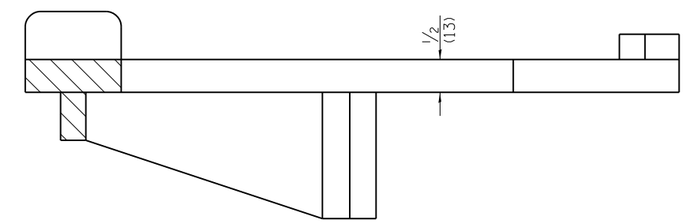

SECTION A–A

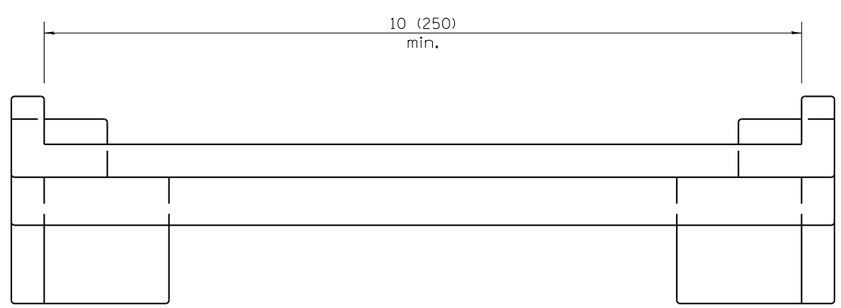

ELEVATION VIEW

All dimensions are in inches (millimeters)
unless otherwise shown.

Illinois Department of Transportation

PASSED January 1, 2009
ENGINEER OF POLICY AND PROCEDURES
APPROVED January 1, 2009
ENGINEER OF DESIGN AND ENVIRONMENT

ISSUED 1-1-97

DATE	REVISIONS
1-1-09	Switched units to
	English (metric).
4-1-06	Revised title, drawings,
	and added plastic
	steps on sheet 2.

MANHOLE STEPS

(Sheet 1 of 2)

STANDARD 602701–02

PLASTIC STEPS

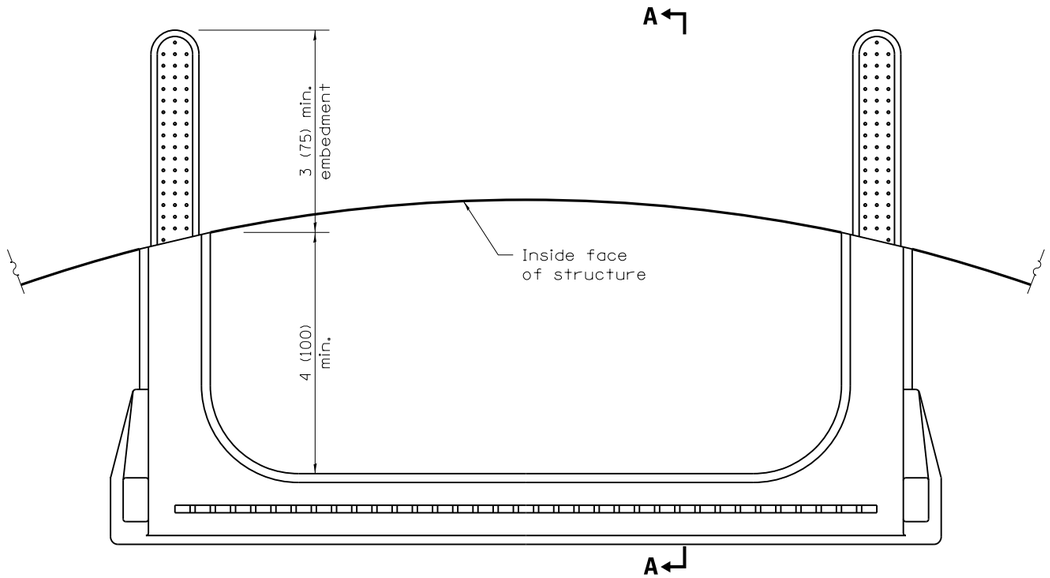

PLAN VIEW

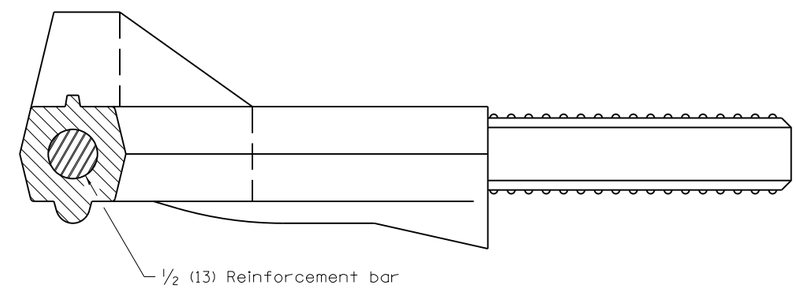

SECTION A–A

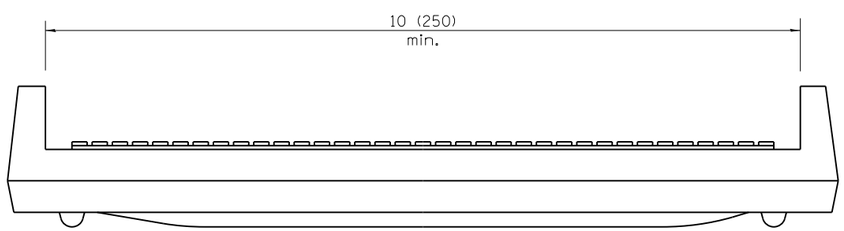

ELEVATION VIEW

Illinois Department of Transportation

PASSED January 1, 2009

ENGINEER OF POLICY AND PROCEDURES

APPROVED January 1, 2009

ENGINEER OF DESIGN AND ENVIRONMENT

ISSUED 1-1-97

MANHOLE STEPS

(Sheet 2 of 2)

STANDARD 602701–02

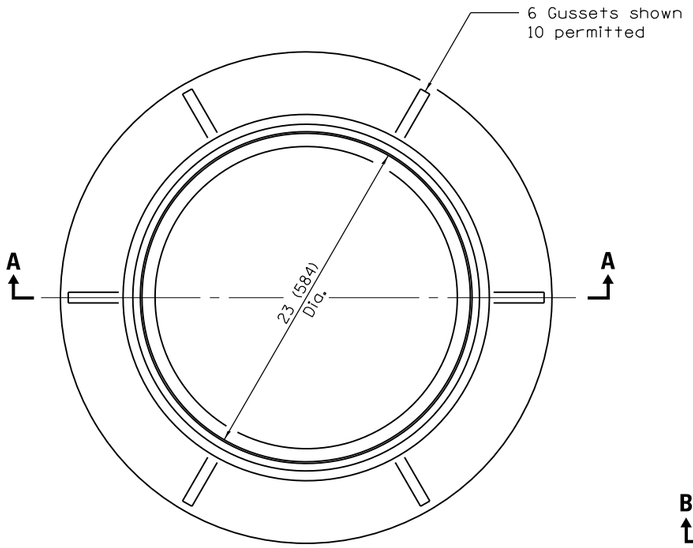

CAST FRAME

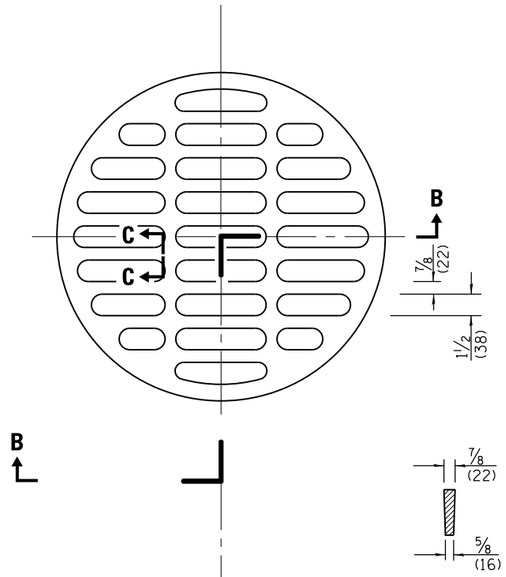

SECTION C–C

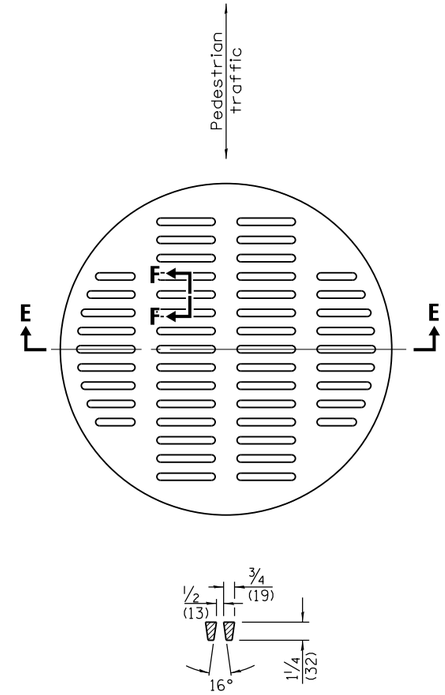

SECTION F–F

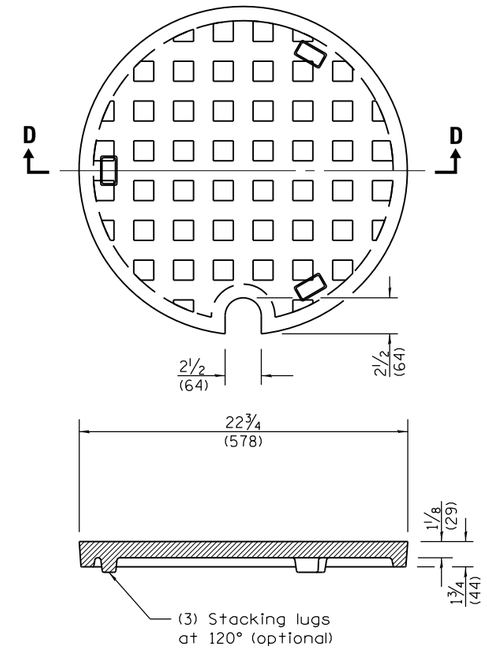

SECTION D–D

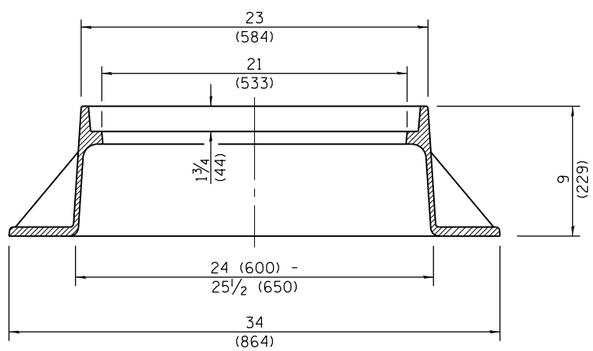

SECTION A–A
Gray Iron

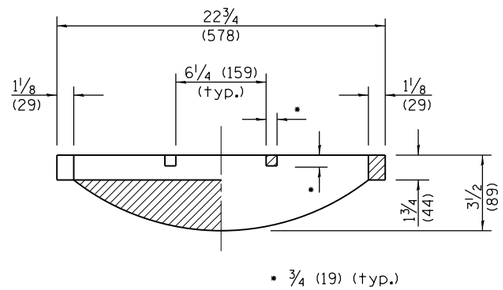

SECTION B–B

CAST OPEN LID

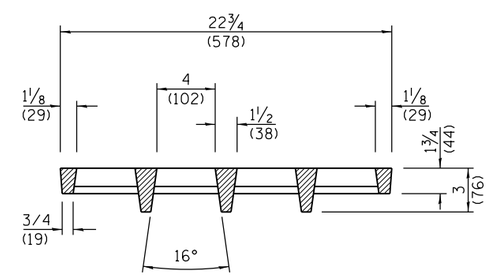

SECTION E–E

ADA COMPLIANT
CAST OPEN LID

CAST CLOSED LID
Gray Iron Lid

All dimensions are in inches (millimeters) unless otherwise shown.

Illinois Department of Transportation

PASSED January 1, 2015
Michael Brand
ENGINEER OF POLICY AND PROCEDURES
APPROVED January 1, 2015
ENGINEER OF DESIGN AND ENVIRONMENT

ISSUED 1-1-97

DATE	REVISIONS
1-1-15	Revised dimensioning of
	frame. Added ADA compliant
	open lid.
1-1-09	Switched units to
	English (metric).

FRAME AND LIDS TYPE 1

STANDARD 604001–04

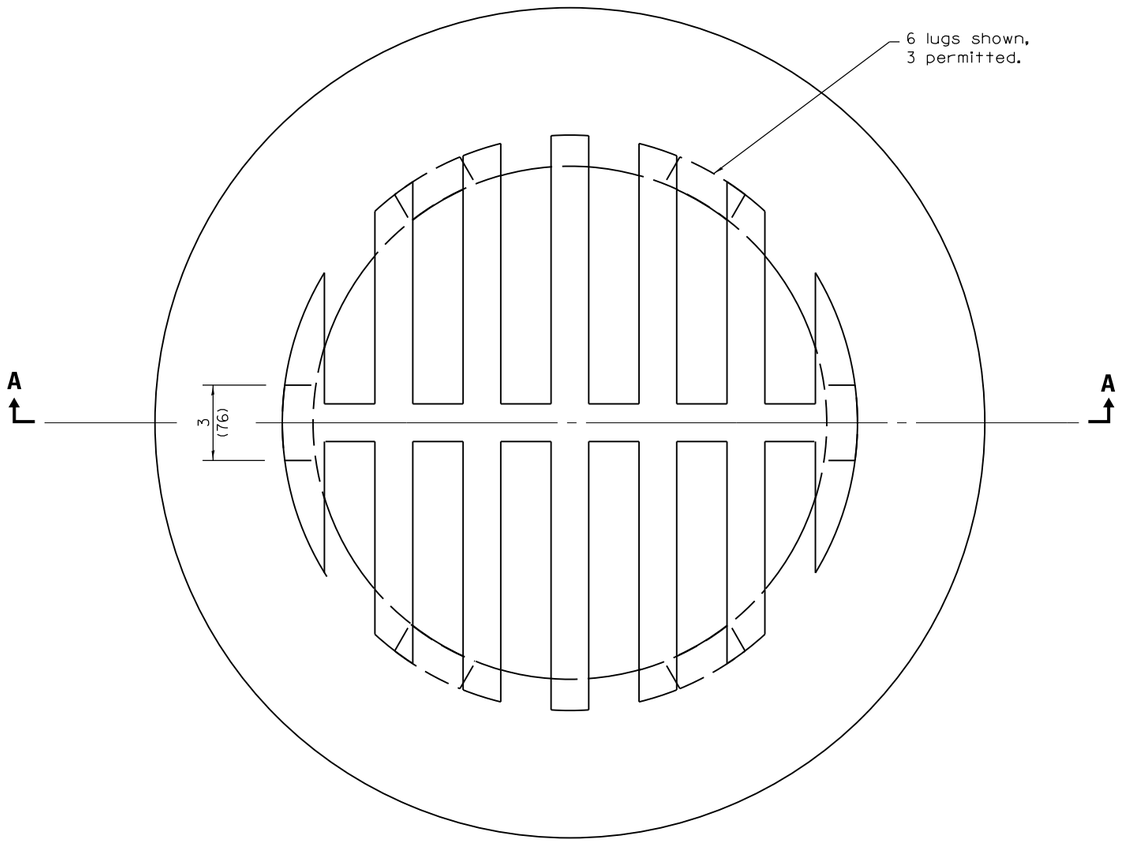

CAST GRATE

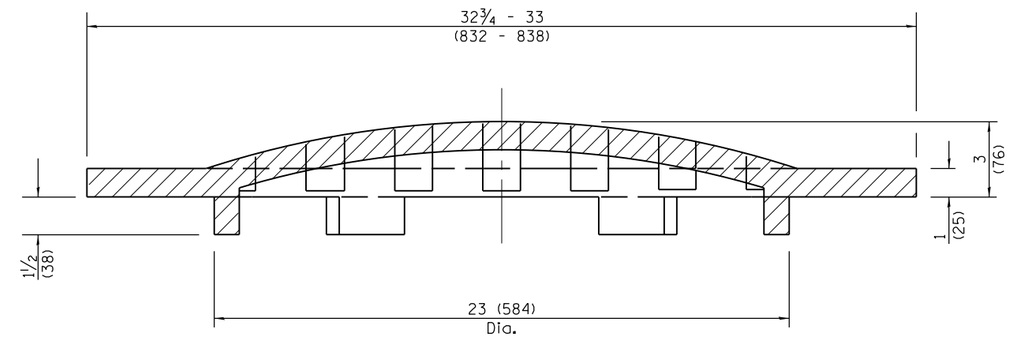

SECTION A–A

All dimensions are in inches (millimeters) unless otherwise shown.

Illinois Department of Transportation

PASSED January 1. 2015

Michael Brand
ENGINEER OF POLICY AND PROCEDURES

APPROVED January 1. 2015

ENGINEER OF DESIGN AND ENVIRONMENT

ISSUED 1-1-97

DATE	REVISIONS
1-1-15	Revised dimensions.
1-1-09	Switched units to
	English (metric).

GRATE TYPE 8

STANDARD 604036–03

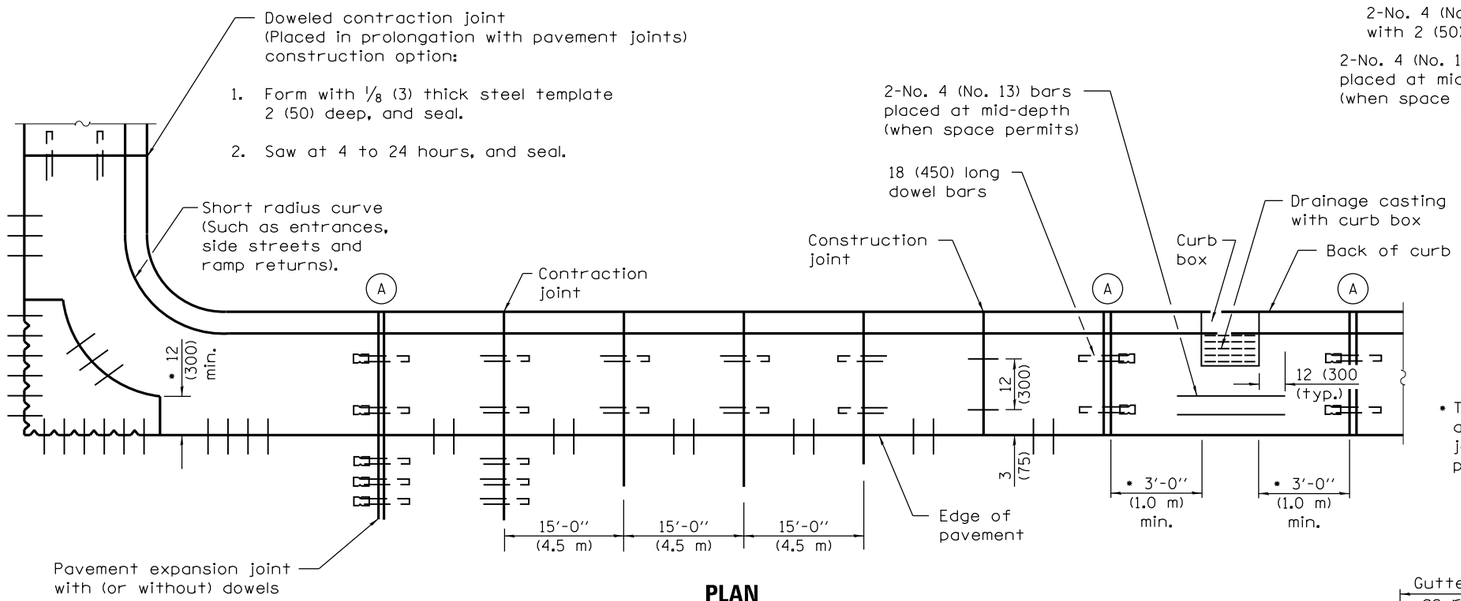

PLAN
ADJACENT TO PCC PAVEMENT OR PCC BASE COURSE

• This dimension shall be adjusted to align with joint on the adjacent pavement

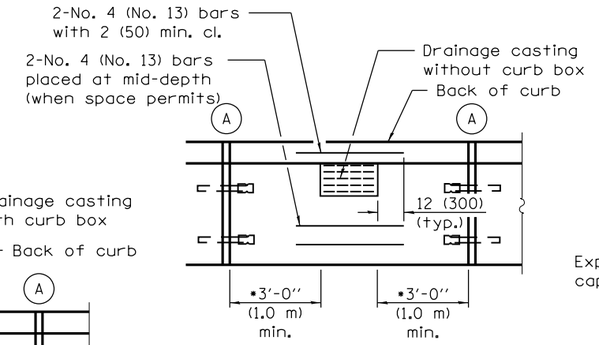

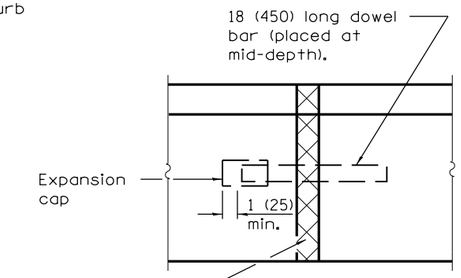

DETAIL (A)
EXPANSION JOINT

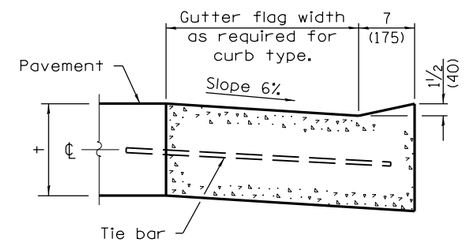

DEPRESSED CURB (TYPICAL)

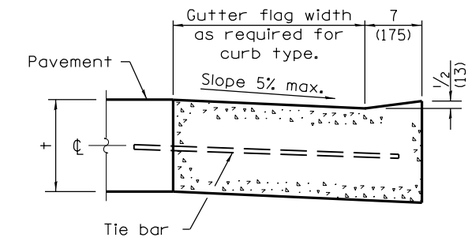

DEPRESSED CURB ADJACENT TO CURB RAMP ACCESSIBLE TO THE DISABLED

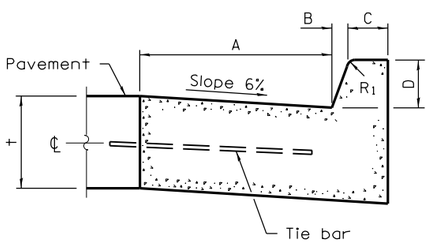

BARRIER CURB

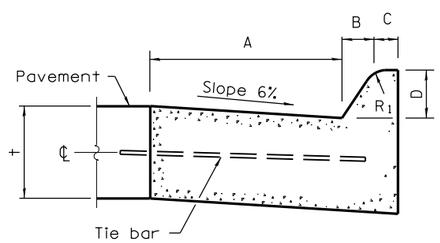

MOUNTABLE CURB

TABLE OF DIMENSIONS BARRIER CURB					
TYPE	A	B	C	D	R_1
B-6.06 * (B-15.15)	6 (150)	1 (25)	6 (150)	6 (150)	1 (25)
B-6.12 (B-15.3)	12 (300)	1 (25)	6 (150)	6 (150)	1 (25)
B-6.18 (B-15.45)	18 (450)	1 (25)	6 (150)	6 (150)	1 (25)
B-6.24 (B-15.60)	24 (600)	1 (25)	6 (150)	6 (150)	1 (25)
B-9.12 (B-22.30)	12 (300)	2 (50)	5 (125)	9 (225)	1 (25)
B-9.18 (B-22.45)	18 (450)	2 (50)	5 (125)	9 (225)	1 (25)
B-9.24 (B-22.60)	24 (600)	2 (50)	5 (125)	9 (225)	1 (25)

* For corner islands only.

TABLE OF DIMENSIONS MOUNTABLE CURB						
TYPE	A	B	C	D	R_1	R_2
M-2.06 (M-5.15)	6 (150)	2 (50)	4 (100)	2 (50)	3 (75)	2 (50)
M-2.12 (M-5.30)	12 (300)	2 (50)	4 (100)	2 (50)	3 (75)	2 (50)
M-4.06 (M-10.15)	6 (150)	4 (100)	3 (75)	4 (100)	3 (75)	NA
M-4.12 (M-10.30)	12 (300)	4 (100)	3 (75)	4 (100)	3 (75)	NA
M-4.18 (M-10.45)	18 (450)	4 (100)	3 (75)	4 (100)	3 (75)	NA
M-4.24 (M-10.60)	24 (600)	4 (100)	3 (75)	4 (100)	3 (75)	NA
M-6.06 (M-15.15)	6 (150)	6 (150)	2 (50)	6 (150)	2 (50)	NA
M-6.12 (M-15.30)	12 (300)	6 (150)	2 (50)	6 (150)	2 (50)	NA
M-6.18 (M-15.45)	18 (450)	6 (150)	2 (50)	6 (150)	2 (50)	NA
M-6.24 (M-15.60)	24 (600)	6 (150)	2 (50)	6 (150)	2 (50)	NA

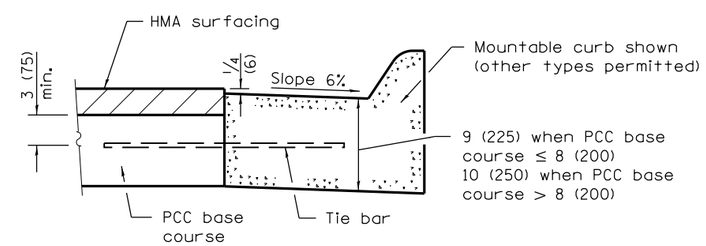

ADJACENT TO PCC BASE COURSE WITH HMA SURFACING

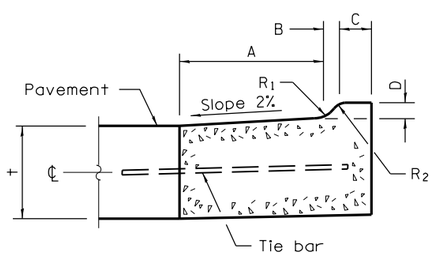

M–2.06 (M–5.15) and M–2.12 (M–5.30)

GENERAL NOTES

The bottom slope of combination curb and gutter constructed adjacent to pcc pavement shall be the same slope as the subbase or 6% when subbase is omitted.

t = Thickness of pavement.

Longitudinal joint tie bars shall be No. 6 (No. 19) at 24 (600) centers in accordance with details for longitudinal construction joint shown on Standard 420001.

A minimum clearance of 2 (50) between the end of the tie bar and the back of the curb shall be maintained.

The dowel bars shown in contraction joints will only be required for monolithic construction.

See Standard 606301 for details of corner islands.

All dimensions are in inches (millimeters) unless otherwise shown.

Illinois Department of Transportation

PASSED January 1, 2015
Michael Brand
ENGINEER OF POLICY AND PROCEDURES
APPROVED January 1, 2015
ENGINEER OF DESIGN AND ENVIRONMENT

ISSUED 1-1-97

DATE	REVISIONS
1-1-15	Added B-6.06 (B-15.15) barrier
	curb and gutter to table
	(corner islands only).
1-1-13	Added general note
	regarding requirement
	for dowel bars.

CONCRETE CURB TYPE B AND COMBINATION CONCRETE CURB AND GUTTER

(Sheet 1 of 2)

STANDARD 606001–06

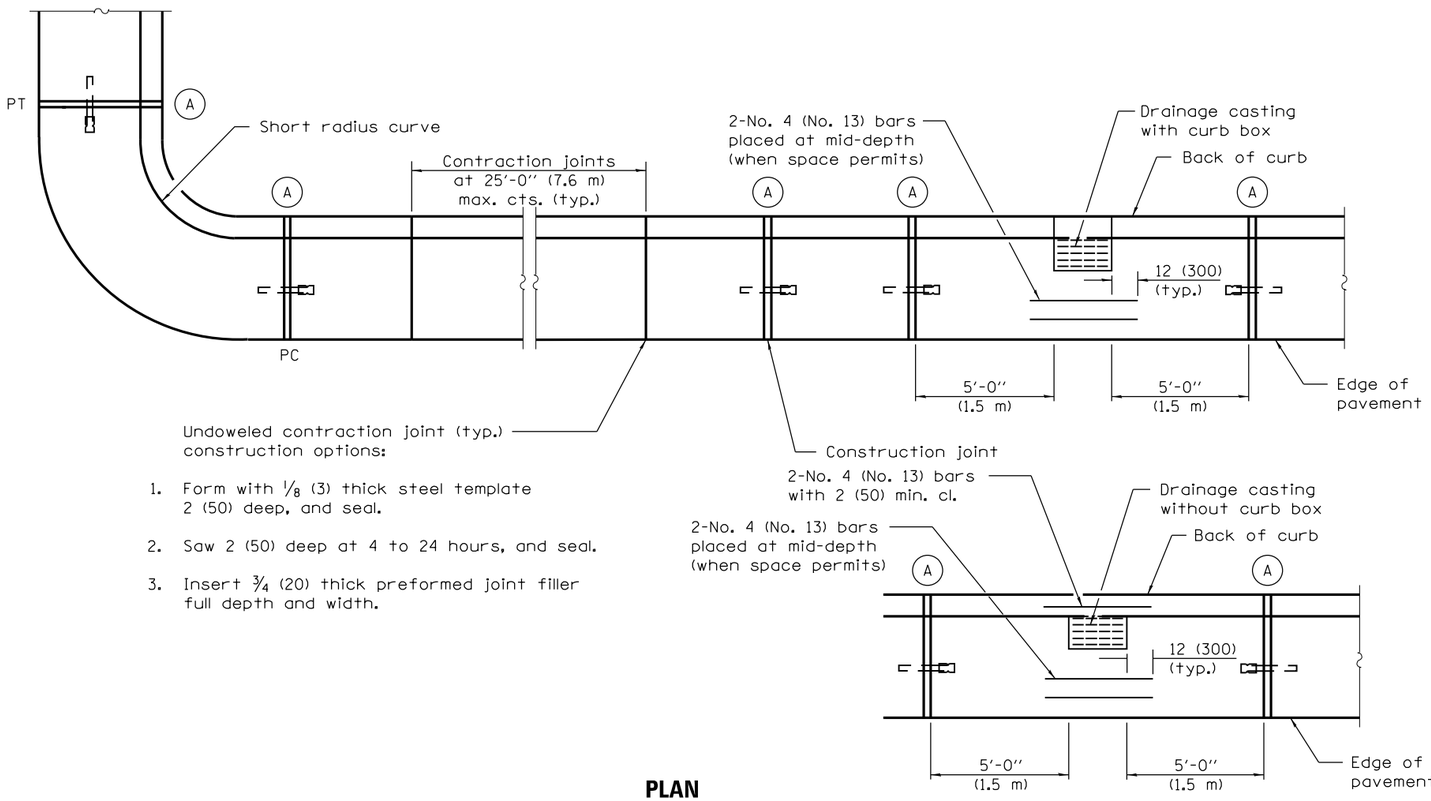

PLAN

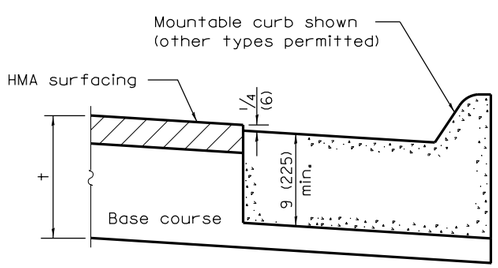

ON DISTURBED SUBGRADE

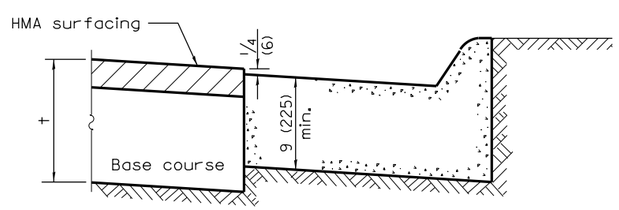

ON UNDISTURBED SUBGRADE

ADJACENT TO FLEXIBLE PAVEMENT

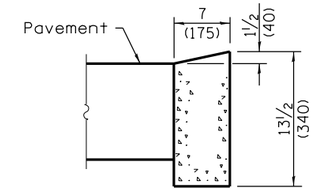

DEPRESSED CURB

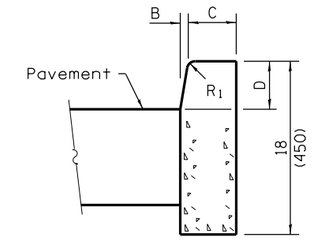

BARRIER CURB

ADJACENT TO FLEXIBLE PAVEMENT

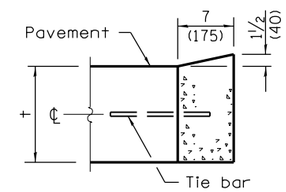

DEPRESSED CURB

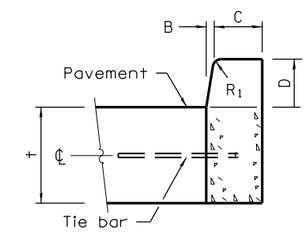

BARRIER CURB

ADJACENT TO PCC PAVEMENT OR PCC BASE COURSE

CONCRETE CURB TYPE B

Illinois Department of Transportation

PASSED January 1, 2015

Michael Brand

ENGINEER OF POLICY AND PROCEDURES

APPROVED January 1, 2015

ENGINEER OF DESIGN AND ENVIRONMENT

ISSUED 1-1-97

CONCRETE CURB TYPE B AND COMBINATION CONCRETE CURB AND GUTTER

(Sheet 2 of 2)

STANDARD 606001–06

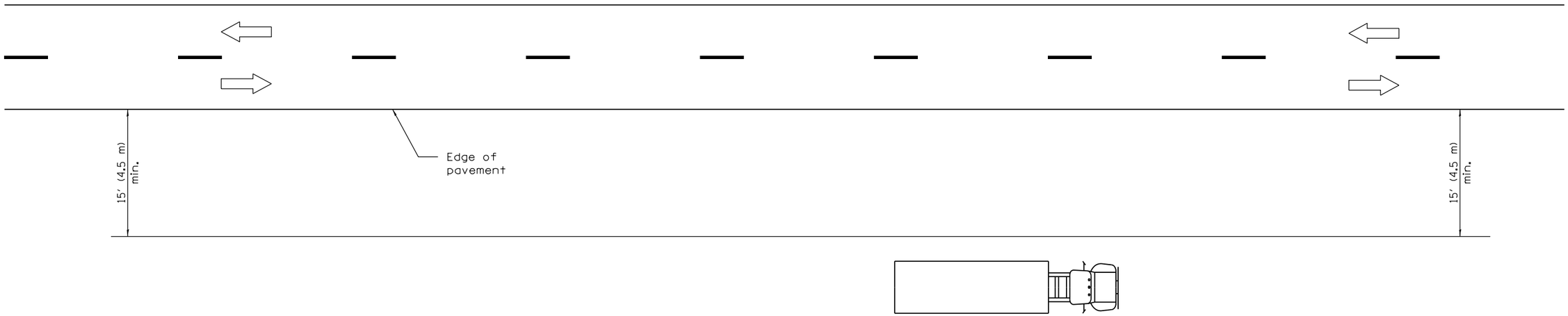

TYPICAL APPLICATIONS

Landscaping work

Utility work

Fencing contracts and maintenance

Cleaning culverts

GENERAL NOTES

This Standard is used where at all times all vehicles, equipment, workers or their activities are more than 15′ (4.5 m) from the edge of pavement.

When the work operation requires that two or more work vehicles cross the 15′ (4.5 m) clear zone in any one hour, traffic control shall be according to Standard 701006.

All dimensions are in inches (millimeters) unless otherwise shown.

Illinois Department of Transportation

APPROVED January 1, 2009
ENGINEER OF OPERATIONS

APPROVED January 1, 2009
ENGINEER OF DESIGN AND ENVIRONMENT

ISSUED 1-1-97

DATE	REVISIONS
1-1-09	Switched units to
	English (metric).
1-1-05	Revised title and notes.

OFF–RD OPERATIONS, 2L, 2W, MORE THAN 15′ (4.5 m) AWAY

STANDARD 701001–02

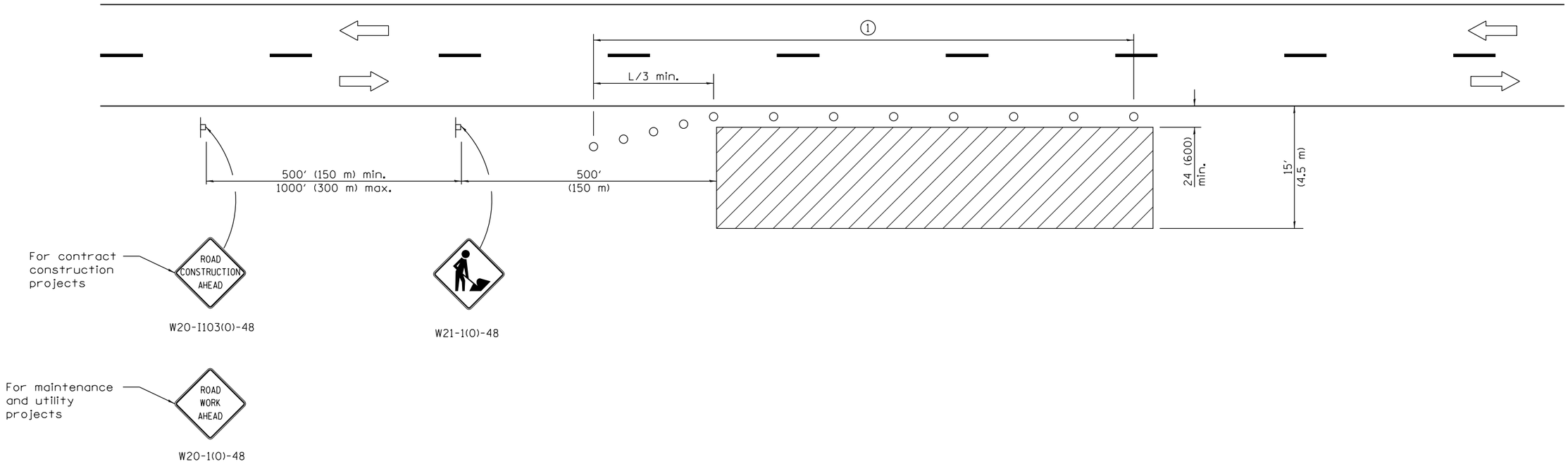

TYPICAL APPLICATIONS

Utility operations
Culvert extensions
Side slope changes
Guardrail installation and maintenance
Delineator installation
Landscaping operations
Shoulder repair
Sign installation and maintenance

SYMBOLS

Work area

Sign

Cone, drum or barricade

① When the work operation exceeds one hour, cones, drums or barricades shall be placed at 25′ (8 m) centers for L/3 distance, and at 50′ (15 m) centers through the remainder of the work area.

GENERAL NOTES

This Standard is used where any vehicles, equipment, workers or their activities will encroach in the area 15′ (4.5 m) to 24 (600) from the edge of pavement.

Calculate L as follows:

SPEED LIMIT	FORMULAS English	FORMULAS (Metric)
40 mph (70 km/h) or less:	$L = \frac{WS^2}{60}$	$L = \frac{WS^2}{150}$
45 mph (80 km/h) or greater:	L=(W)(S)	L=0.65(W)(S)

W = Width of offset in feet (meters).

S = Normal posted speed mph (km/h).

All dimensions are in inches (millimeters) unless otherwise shown.

Illinois Department of Transportation

APPROVED January 1, 2014
ENGINEER OF SAFETY ENGINEERING

APPROVED January 1, 2014
ENGINEER OF DESIGN AND ENVIRONMENT

ISSUED 1-1-97

DATE	REVISIONS
1-1-14	Revised workers sign
	number to agree with
	current MUTCD.
1-1-13	Omitted text 'WORKERS'
	sign.

OFF–RD OPERATIONS, 2L, 2W, 15′ (4.5 m) TO 24″ (600 mm) FROM PAVEMENT EDGE

STANDARD 701006–05

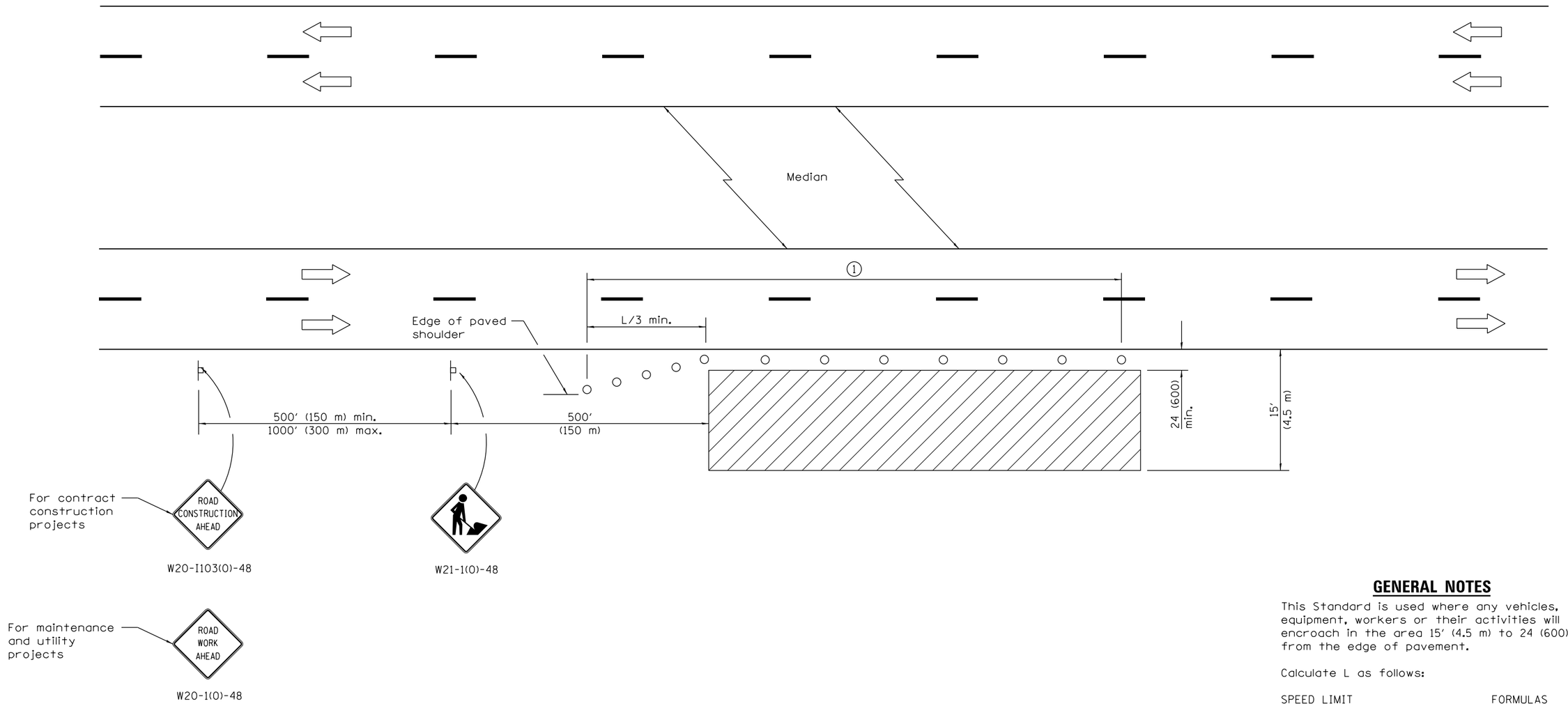

TYPICAL APPLICATIONS

Utility operations
Culvert extensions
Side slope changes
Guardrail installation and maintenance
Delineator installation
Landscaping operations
Shoulder repair
Sign installation and maintenance

① When the work operation exceeds one hour, cones, drums or barricades shall be placed at 25′ (8 m) centers for L/3 distance, and at 50′ (15 m) centers through the remainder of the work area.

GENERAL NOTES

This Standard is used where any vehicles, equipment, workers or their activities will encroach in the area 15′ (4.5 m) to 24 (600) from the edge of pavement.

Calculate L as follows:

SPEED LIMIT	FORMULAS English	FORMULAS (Metric)
40 mph (70 km/h) or less:	$L = \frac{WS^2}{60}$	$L = \frac{WS^2}{150}$
45 mph (80 km/h) or greater:	L=(W)(S)	L=0.65(W)(S)

W = Width of offset in feet (meters).

S = Normal posted speed mph (km/h).

All dimensions are in inches (millimeters) unless otherwise shown.

SYMBOLS

Work area

Sign

Cone, drum or barricade

Illinois Department of Transportation

APPROVED April 1, 2016
ENGINEER OF SAFETY ENGINEERING

APPROVED April 1, 2016
ENGINEER OF DESIGN AND ENVIRONMENT

ISSUED 1-1-97

DATE	REVISIONS
4-1-16	Corrected typo in title.
1-1-14	Revised workers sign
	number to agree with
	current MUTCD.

OFF–RD OPERATIONS, MULTILANE, 15′ (4.5 m) TO 24″ (600 mm) FROM PAVEMENT EDGE

STANDARD 701101–05

① Cones at 25′ (8 m) centers for 250′ (75 m). Additional cones may be placed at 50′ (15 m) centers. When drums or barricades are used, the interval between devices may be doubled.

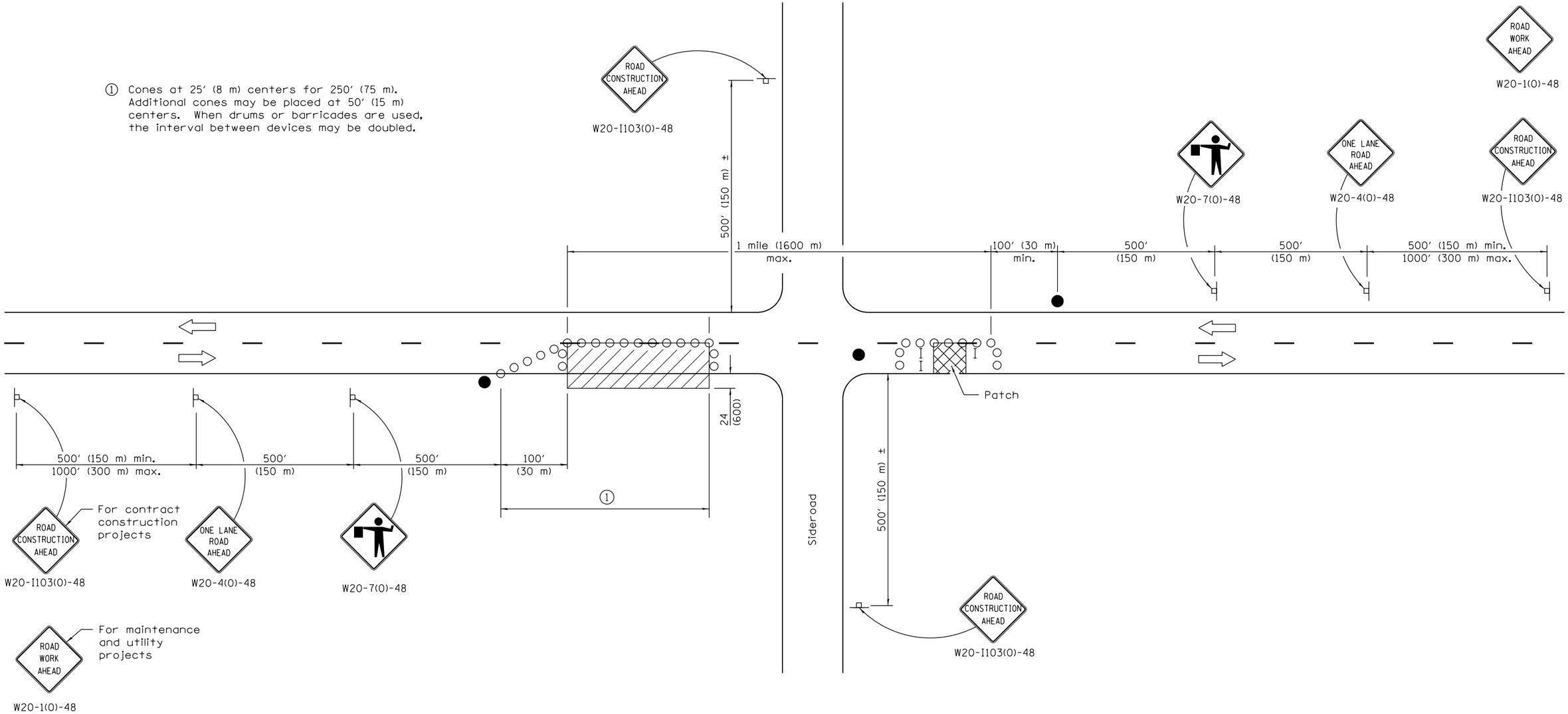

SYMBOLS

- Work area
- Sign
- Barricade or drum
- Cone, drum or barricade
- Flagger with traffic control sign

TYPICAL APPLICATIONS

Isolated patching
Utility operations
Storm sewer
Culverts
Cable placement

GENERAL NOTES

This Standard is used where at any time, any vehicles, equipment, workers or their activities will encroach in the area between the center line and a line 24 (600) outside the edge of pavement for daylight operation.

When the distance between successive work areas exceeds 2000′ (600 m), additional warning signs, flaggers, and taper shall be placed as shown.

All dimensions are in inches (millimeters) unless otherwise shown.

Illinois Department of Transportation

APPROVED January 1, 2011
ENGINEER OF SAFETY ENGINEERING

APPROVED January 1, 2011
ENGINEER OF DESIGN AND ENVIRONMENT

ISSUED 1-1-97

DATE	REVISIONS
1-1-11	Revised flagger sign.
1-1-09	Switched units to
	English (metric).
	Corrected sign No.'s.

LANE CLOSURE, 2L, 2W, DAY ONLY, FOR SPEEDS ≥ 45 MPH

STANDARD 701201–04

For any operation that encroaches in the area between the centerline and a line 24 (600) outside the edge of the pavement for a period of less than 15 minutes.

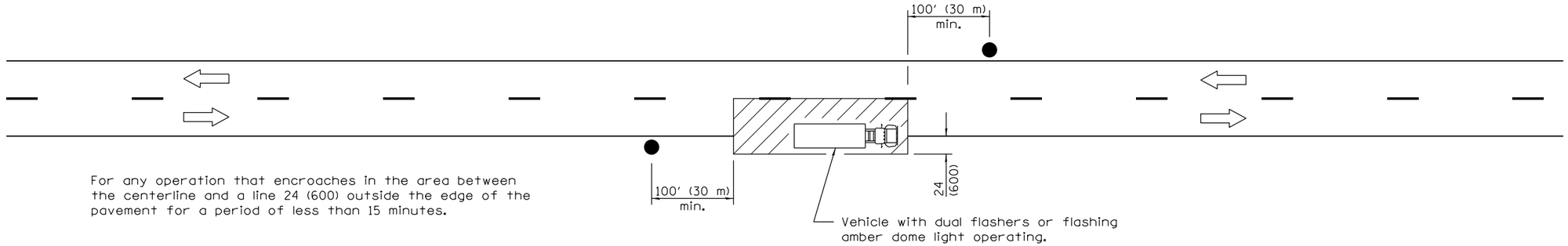

For any operation that is more than 24 (600) outside the edge of the pavement for a period of less than 60 minutes.

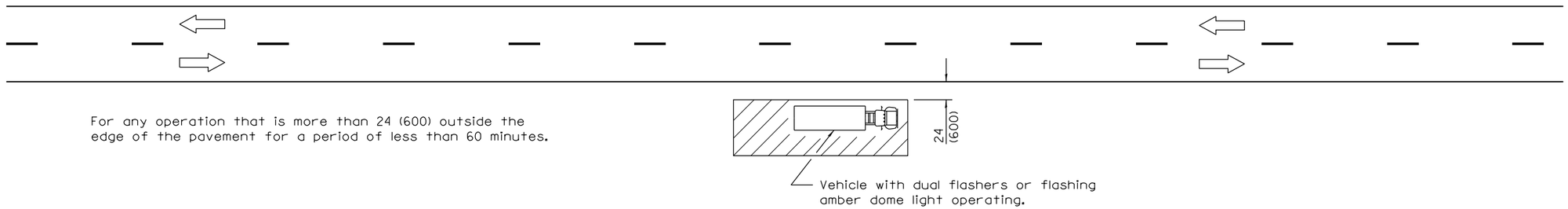

For any operation that encroaches in the area between the centerline and a line 24 (600) outside the edge of the pavement for a period in excess of 15 minutes but less than 60 minutes.

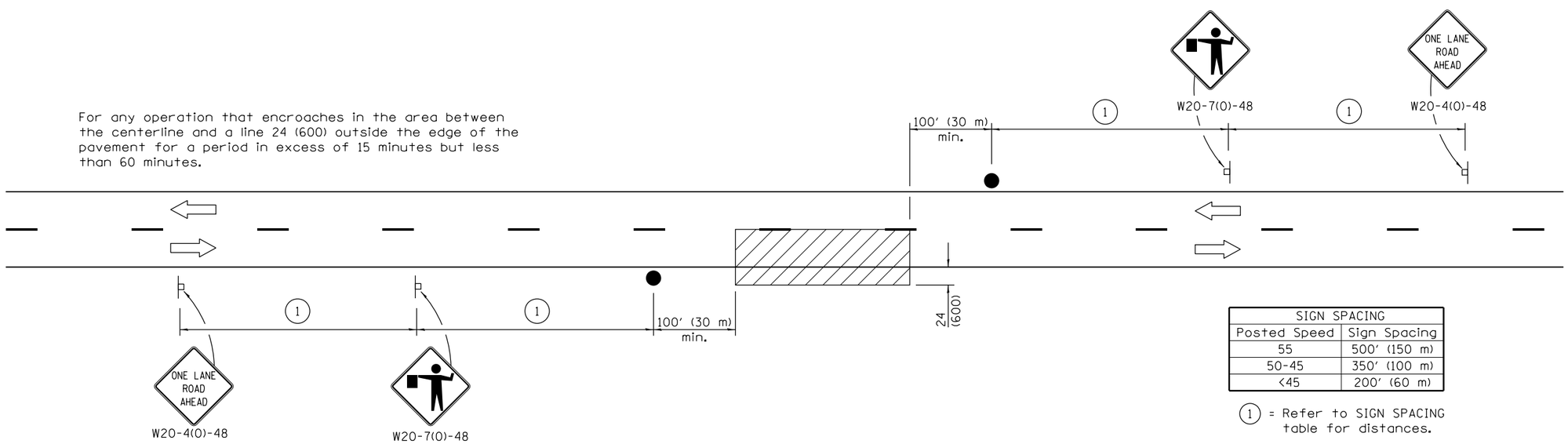

SIGN SPACING	
Posted Speed	Sign Spacing
55	500' (150 m)
50-45	350' (100 m)
<45	200' (60 m)

(1) = Refer to SIGN SPACING table for distances.

All dimensions are in inches (millimeters) unless otherwise shown.

TYPICAL APPLICATIONS

Marking patches
Field survey
String line
Utility operations
Cleaning up debris on pavement

SYMBOLS

Work area

Sign on portable or permanent support

Flagger with traffic control sign

Illinois Department of Transportation

APPROVED January 1, 2011
ENGINEER OF SAFETY ENGINEERING

APPROVED January 1, 2011
ENGINEER OF DESIGN AND ENVIRONMENT

ISSUED 1-1-97

DATE	REVISIONS
1-1-11	Revised flagger sign.
1-1-09	Switched units to
	English (metric).

LANE CLOSURE, 2L, 2W, SHORT TIME OPERATIONS

STANDARD 701301–04

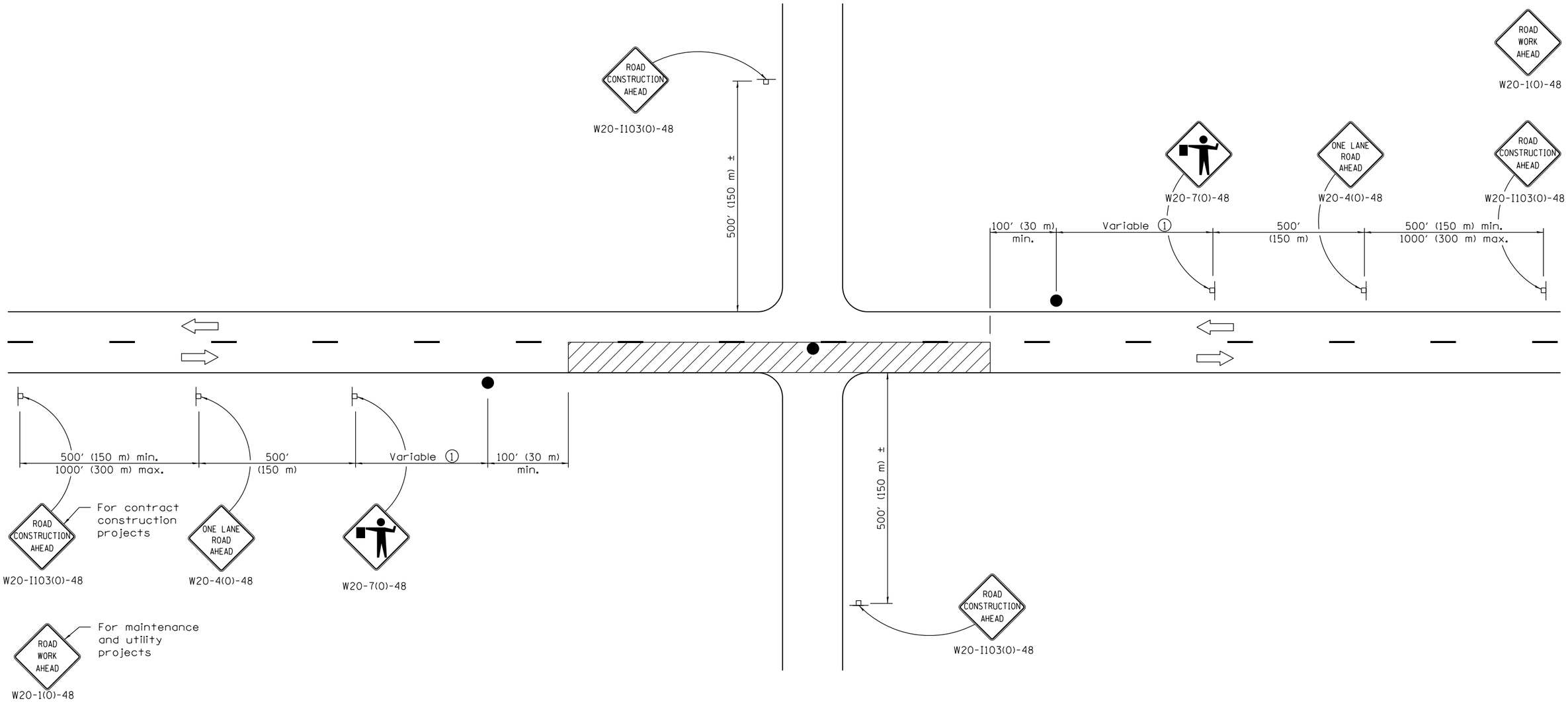

TYPICAL APPLICATIONS

Bituminous resurfacing
Milling operations
Utility operations
Shoulder operations

① Minimum distance is 200′ (60 m). Maximum distance to be determined by the Engineer but should not exceed ½ the length required for one normal working day's operation or 2 miles (3200 m), whichever is less.

SYMBOLS

Work area

Sign on portable or permanent support

Flagger with traffic control sign

GENERAL NOTES

This Standard is used where at any time, any vehicle, equipment, workers or their activities require an intermittent or continuous moving operation on the pavement where the average speed of movement is greater than 1 mph (2 km/h) and less than 4 mph (6 km/h).

When the operation does not exceed 60 minutes, traffic control may be according to Standard 701301.

All dimensions are in inches (millimeters) unless otherwise shown.

Illinois Department of Transportation

APPROVED January 1, 2011
ENGINEER OF SAFETY ENGINEERING

APPROVED January 1, 2011
ENGINEER OF DESIGN AND ENVIRONMENT

ISSUED 1-1-97

DATE	REVISIONS
1-1-11	Revised flagger sign.
1-1-09	Switched units to
	English (metric).
	Corrected sign No.'s.

LANE CLOSURE, 2L, 2W, SLOW MOVING OPERATIONS DAY ONLY, FOR SPEEDS ≥ 45 MPH

STANDARD 701306–03

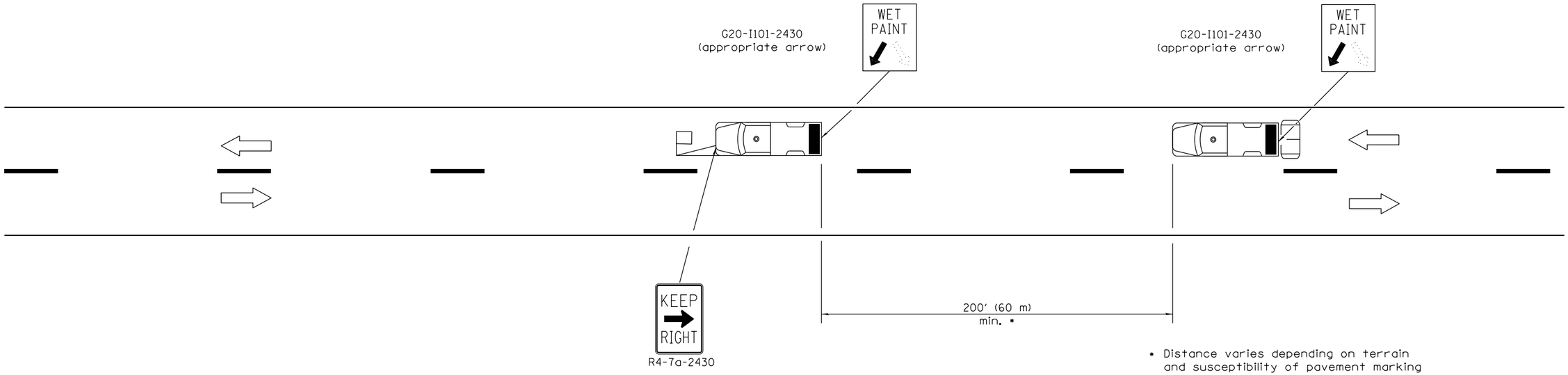

• Distance varies depending on terrain and susceptibility of pavement marking or crack sealant to wheel tracking.

TYPICAL APPLICATIONS

Landscaping work
Utility work
Pavement marking
Weed spraying
Roadometer measurements
Debris cleanup
Crack pouring

SYMBOLS

Arrow board (Hazard Mode only)

Truck with headlights, emergency flashers and flashing amber light. (visible from all directions)

18x18 (450x450) min. orange flag (use when guide wheel is used)

Truck mounted attenuator

GENERAL NOTES

This Standard is used where any vehicle, equipment, workers or their activities will require a continuous moving operation where the average speed is greater than 3 mph (5 km/h).

For shoulder operations not encroaching on the pavement, use DETAIL A, Standard 701426.

All dimensions are in inches (millimeters) unless otherwise shown.

Illinois Department of Transportation

APPROVED January 1, 2009
ENGINEER OF OPERATIONS

APPROVED January 1, 2009
ENGINEER OF DESIGN AND ENVIRONMENT

ISSUED 1-1-97

DATE	REVISIONS
1-1-09	Switched units to
	English (metric). Omitted
	Pass With Care sign.
1-1-00	Elim. speed restrictions
	in Standard title.

LANE CLOSURE 2L, 2W MOVING OPERATIONS– DAY ONLY

STANDARD 701311–03

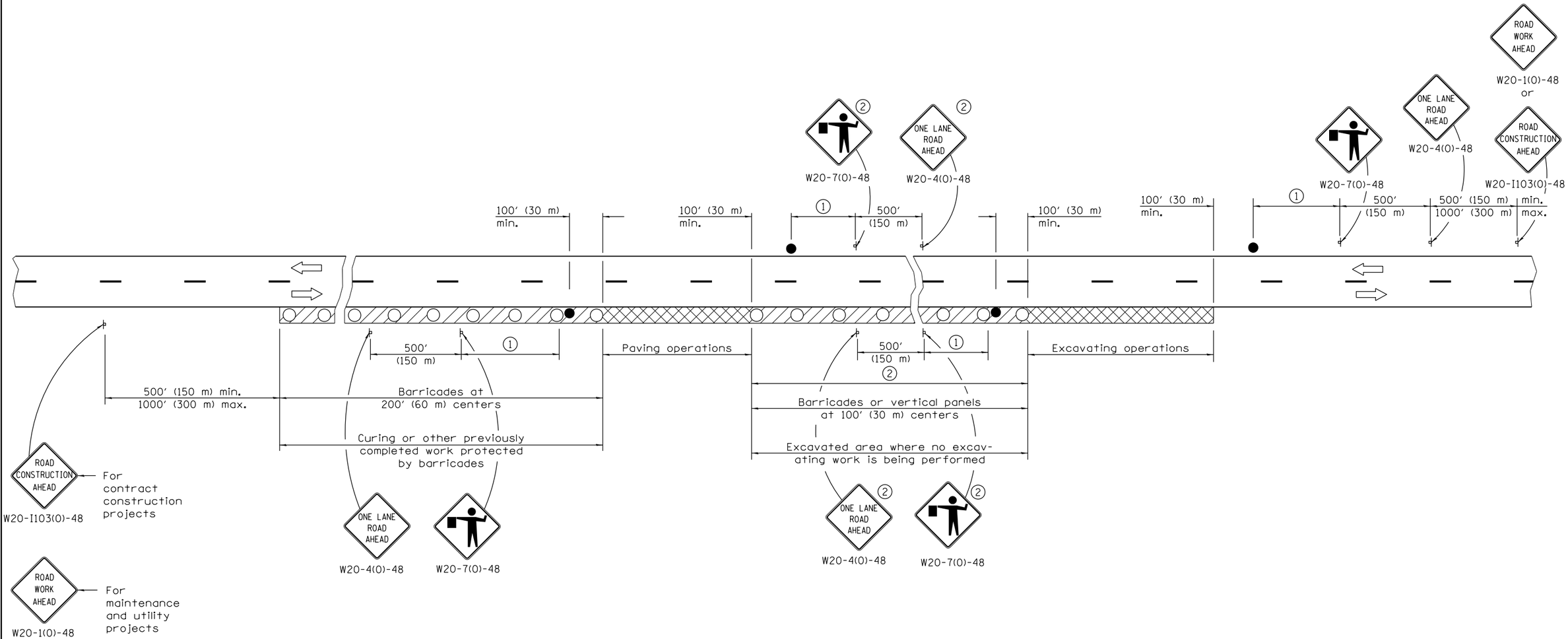

SYMBOLS

- Work area
- Active Work area
- Sign
- Barricade, drum, or vertical panels
- Flagger with traffic control sign

(1) Minimum distance is 200′ (60 m). Maximum distance to be determined by the Engineer but in no case to exceed the length of ½ day's normal operation or 2 miles (3200 m) whichever is less.

(2) Signs are not required if distance between work operations is less than 2000′ (600 m) unless restricted sight distance exists.

GENERAL NOTES

This Standard is used where at any time, any vehicle, equipment, workers or their activities will encroach on the pavement during widening operations.

Two flaggers are required for each separate operation.

All dimensions are in inches (millimeters) unless otherwise shown.

Illinois Department of Transportation

APPROVED January 1, 2011
ENGINEER OF SAFETY ENGINEERING

APPROVED January 1, 2011
ENGINEER OF DESIGN AND ENVIRONMENT

ISSUED 1-1-97

DATE	REVISIONS
1-1-11	Revised flagger sign.
1-1-09	Switched units to
	English (metric).
	Corrected sign No.'s.

LANE CLOSURE, 2L, 2W, PAVEMENT WIDENING, FOR SPEEDS ≥ 45 MPH

STANDARD 701326–04

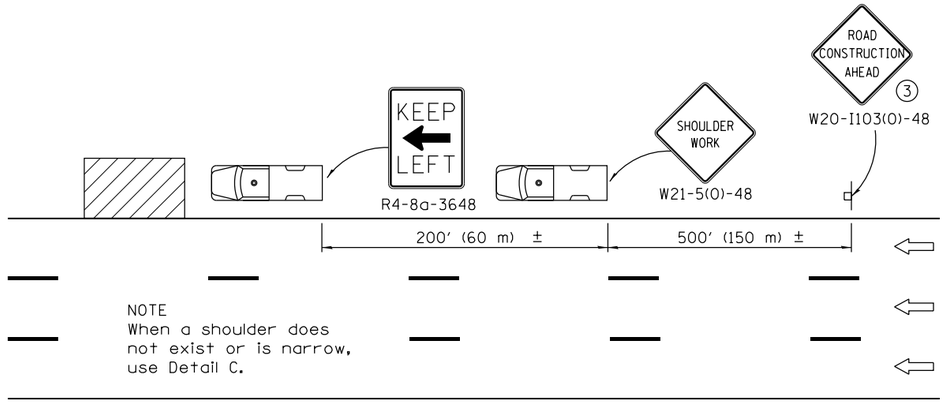

DETAIL A

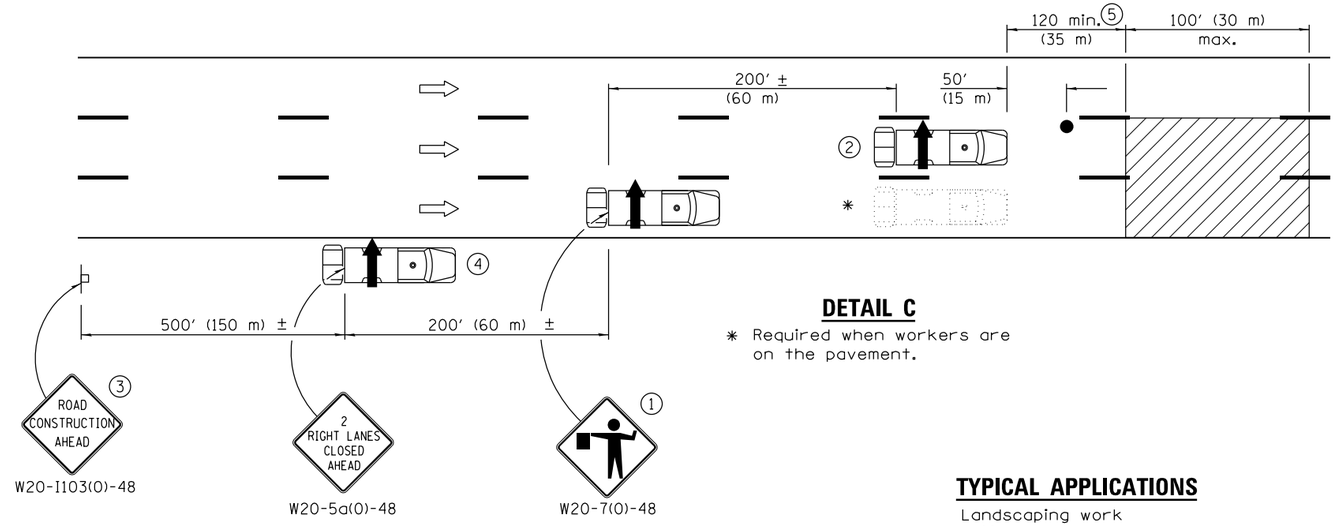

DETAIL C

* Required when workers are on the pavement.

TYPICAL APPLICATIONS

Landscaping work
Utility work
Pavement marking
Weed spraying
Roadometer measurements
Debris cleanup
Crack pouring

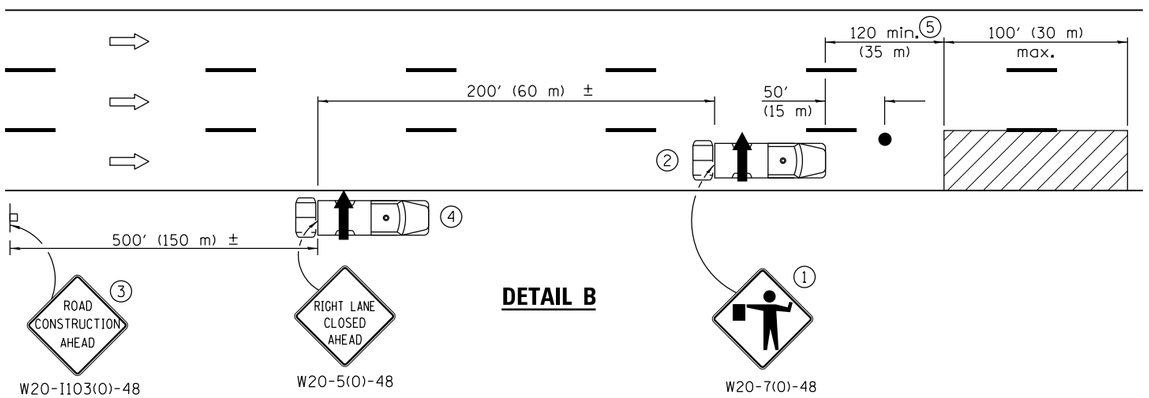

DETAIL B

1. Flaggers are required when workers are on the pavement.
2. For striping operations only. See sign arrow detail on this standard.
3. For stationary operations which are on the roadway or shoulder, greater than 15 minutes and up to 1 hour.
4. Omit truck, attenuator and arrow board when no shoulder exists due to curb and gutter.
5. The distance between the work and the lead truck may vary according to terrain or paint/crack sealing time.

G20-I101-2430
(appropriate arrow)
2 (when striping only)

GENERAL NOTES

This Standard is used where any vehicle, equipment, workers or their activities will require: 1) stationary operations up to 1 hour, or 2) a continuous or intermittent moving operation where the average speed of movement is greater than 1 mph (2 km/h).

This Standard is also applicable when work is being performed in the left lane(s) or on the median shoulder. Under these conditions, KEEP RIGHT signs shall be substituted for KEEP LEFT signs and arrow board indications shall be directed to the right.

All dimensions are in inches (millimeter) unless otherwise shown.

SYMBOLS

- Arrow board
- Work area
- Truck with flashing amber light
- Truck/Trailer mounted attenuator
- Flagger with traffic control sign
- Sign

Illinois Department of Transportation

APPROVED April 1, 2016
ENGINEER OF SAFETY ENGINEERING

APPROVED April 1, 2016
ENGINEER OF DESIGN AND ENVIRONMENT

ISSUED 1-1-11

DATE	REVISIONS
4-1-16	Rev. gen. notes. Added
	note 5. Rev. dist. between
	work and lead truck.
1-1-15	Added general note
	regarding vehicle spacing.
	Corr. KEEP LEFT sign no.

LANE CLOSURE, MULTILANE, INTERMITTENT OR MOVING OPER., FOR SPEEDS ≤ 40 MPH

STANDARD 701427–04

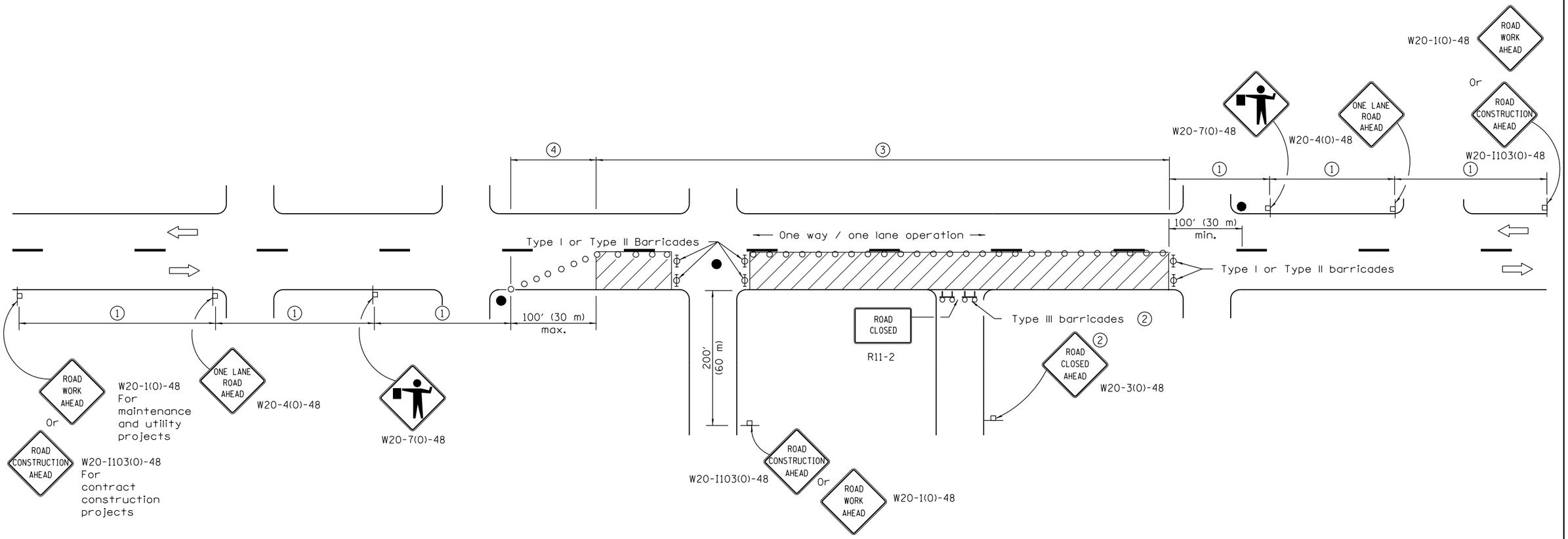

SIGN SPACING	
Posted Speed	Sign Spacing
55	500′ (150 m)
50-45	350′ (100 m)
<45	200′ (60 m)

SYMBOLS

- Work area
- Cone, drum or barricade (not required for moving operations)
- Sign on portable or permanent support
- Flagger with traffic control sign
- Barricade or drum with flashing light
- Type III barricade with flashing lights

1. Refer to SIGN SPACING TABLE for distances.
2. For approved sideroad closures.
3. Cones at 25′ (8 m) centers for 250′ (75 m). Additional cones may be placed at 50′ (15 m) centers. When drums or Type I or Type II barricades are used. the interval between devices may be doubled.
4. Cones, drums or barricades at 20′ (6 m) centers.

GENERAL NOTES

This Standard is used where at any time, day or night, any vehicle, equipment, workers or their activities
encroach on the pavement requiring the closure of one traffic lane in an urban area.

All dimensions are in inches (millimeters) unless otherwise shown.

Illinois Department of Transportation

APPROVED January 1, 2011
ENGINEER OF SAFETY ENGINEERING
APPROVED January 1, 2011
ENGINEER OF DESIGN AND ENVIRONMENT

ISSUED 1-1-97

DATE	REVISIONS
1-1-11	Revised flagger sign.
1-1-09	Switched units to
	English (metric).
	Corrected sign No.'s.

URBAN LANE CLOSURE, 2L, 2W, UNDIVIDED

STANDARD 701501–06

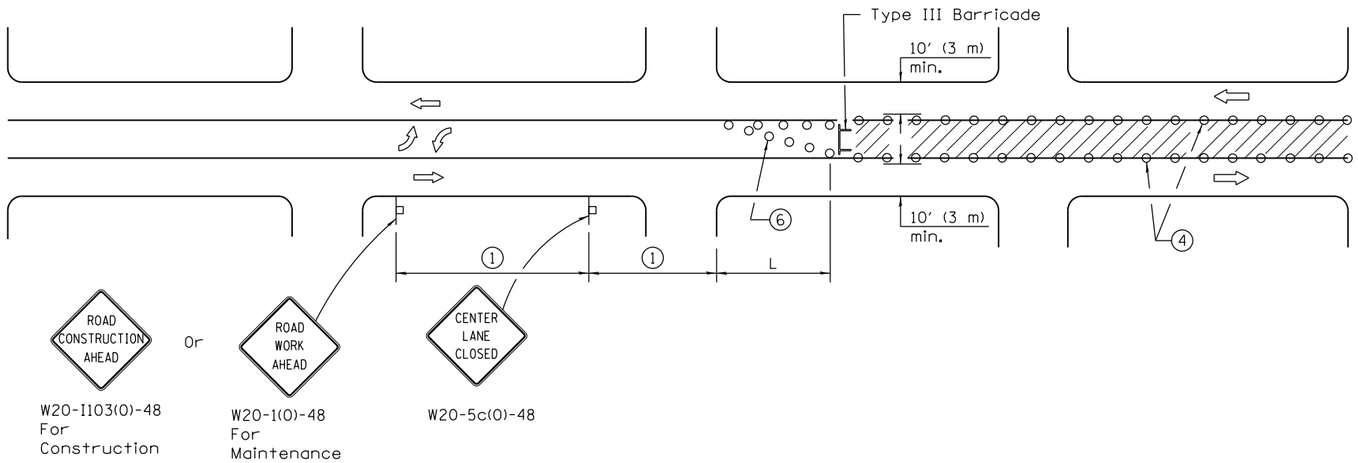

CASE I

(Signs required for both directions)

SIGN SPACING	
Posted Speed	Sign Spacing
55	500′ (150 m)
50-45	350′ (100 m)
<45	200′ (60 m)

SYMBOLS

- Work area
- Barricade or drum with flashing light
- Flagger with traffic control sign
- Cone, drum or barricade (Cones for daytime use only)
- Sign on portable or permanent support

1. Refer to SIGN SPACING TABLE for distances.
2. Required for speeds > 40 mph (70 km/h).
3. Required if work exceeds 500′ (164 m) or 1 block.
4. Cones at 25′ (8 m) centers for 250′ (75 m). Additional cones may be placed at 15 m (50′) centers. When drums or type I or II barricades are used, the interval between devices may be doubled.
5. For approved sideroad closures.
6. Cones, drums or barricades at 20′ (6 m) centers in taper.
7. Use flagger sign only when flagger is present.

GENERAL NOTES

This Standard is used to close one lane of an urban, two lane, two way roadway with a bidirectional turn lane.

Case I applies when no workers are present. When workers are present, two lanes shall be closed and traffic control shall be according to Standard 701501.

Calculate L as follows:

SPEED LIMIT	FORMULAS English	FORMULAS (Metric)
40 mph (70 km/h) or less:	$L = \frac{WS^2}{60}$	$L = \frac{WS^2}{150}$
45 mph (80 km/h) or greater:	L=(W)(S)	L=0.65(W)(S)

W = Width of offset in feet (meters).

S = Normal posted speed mph (km/h).

All dimensions are in inches (millimeters) unless otherwise shown.

Illinois Department of Transportation

APPROVED January 1, 2014
ENGINEER OF SAFETY ENGINEERING
APPROVED January 1, 2014
ENGINEER OF DESIGN AND ENVIRONMENT

ISSUED 1-1-01

DATE	REVISIONS
1-1-14	Omitted original note 4.
	Rev. workers sign no. to
	agree with current MUTCD.
1-1-13	Omitted text 'WORKERS'
	sign.

URBAN LANE CLOSURE, 2L, 2W, WITH BIDIRECTIONAL LEFT TURN LANE

(Sheet 1 of 2)

STANDARD 701502–06

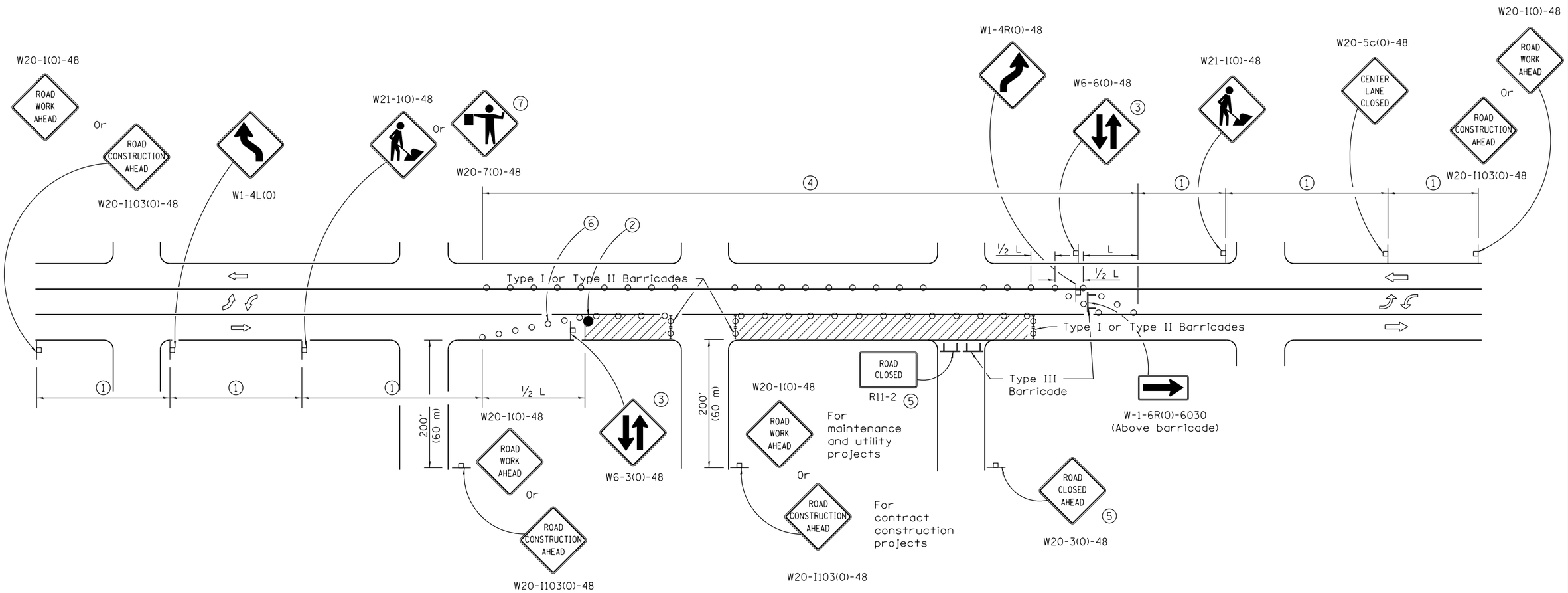

CASE II

Illinois Department of Transportation

APPROVED January 1, 2014
ENGINEER OF SAFETY ENGINEERING

APPROVED January 1, 2014
ENGINEER OF DESIGN AND ENVIRONMENT

ISSUED 1-1-10

URBAN LANE CLOSURE, 2L, 2W, WITH BIDIRECTIONAL LEFT TURN LANE

(Sheet 2 of 2)

STANDARD 701502–06

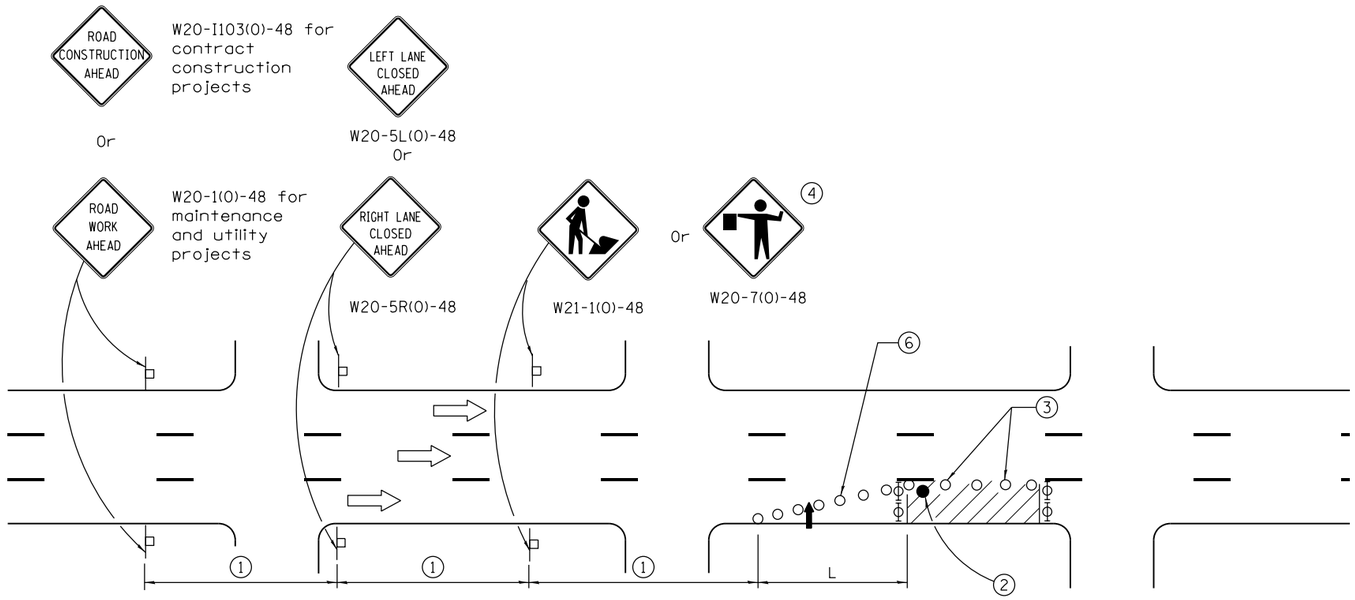

SIGN SPACING	
Posted Speed	Sign Spacing
55	500′ (150 m)
50-45	350′ (100 m)
<45	200′ (60 m)

SYMBOLS

- Arrow board
- Cone, drum or barricade
- Sign on portable or permanent support
- Work area
- Barricade or drum with flashing light
- Type III barricade with flashing lights
- Flagger with traffic control sign.

1. Refer to SIGN SPACING TABLE for distances.
2. Required for speeds > 40 MPH
3. Cones at 25′ (8 m) centers for 250′ (75 m). Additional cones may be placed at 50′ (15 m) centers. When drums or Type I or Type II barricades are used, the interval between devices may be doubled.
4. Use flagger sign only when flagger is present.
5. For approved sideroad closures.
6. Cones, drums or barricades at 20′ (6 m) in taper.

GENERAL NOTES

This Standard is used where at any time, day or night, any vehicle, equipment, workers or their activities encroach on the pavement during shoulder operations or where construction requires lane closures in urban areas.

Calculate L as follows:

SPEED LIMIT	FORMULAS English	FORMULAS (Metric)
40 mph (70 km/h) or less:	$L = \frac{WS^2}{60}$	$L = \frac{WS^2}{150}$
45 mph (80 km/h) or greater:	L=(W)(S)	L=0.65(W)(S)

W = Width of offset in feet (meters).

S = Normal posted speed mph (km/h).

All dimensions are in inches (millimeters) unless otherwise shown.

Illinois Department of Transportation

APPROVED January 1, 2014
ENGINEER OF SAFETY ENGINEERING

APPROVED January 1, 2014
ENGINEER OF DESIGN AND ENVIRONMENT

ISSUED 1-1-97

DATE	REVISIONS
1-1-14	Revised workers sign
	number to agree with
	current MUTCD.
1-1-13	Omitted text 'WORKERS'
	sign.

URBAN LANE CLOSURE, MULTILANE, 1W OR 2W WITH NONTRAVERSABLE MEDIAN

(Sheet 1 of 2)

STANDARD 701601–09

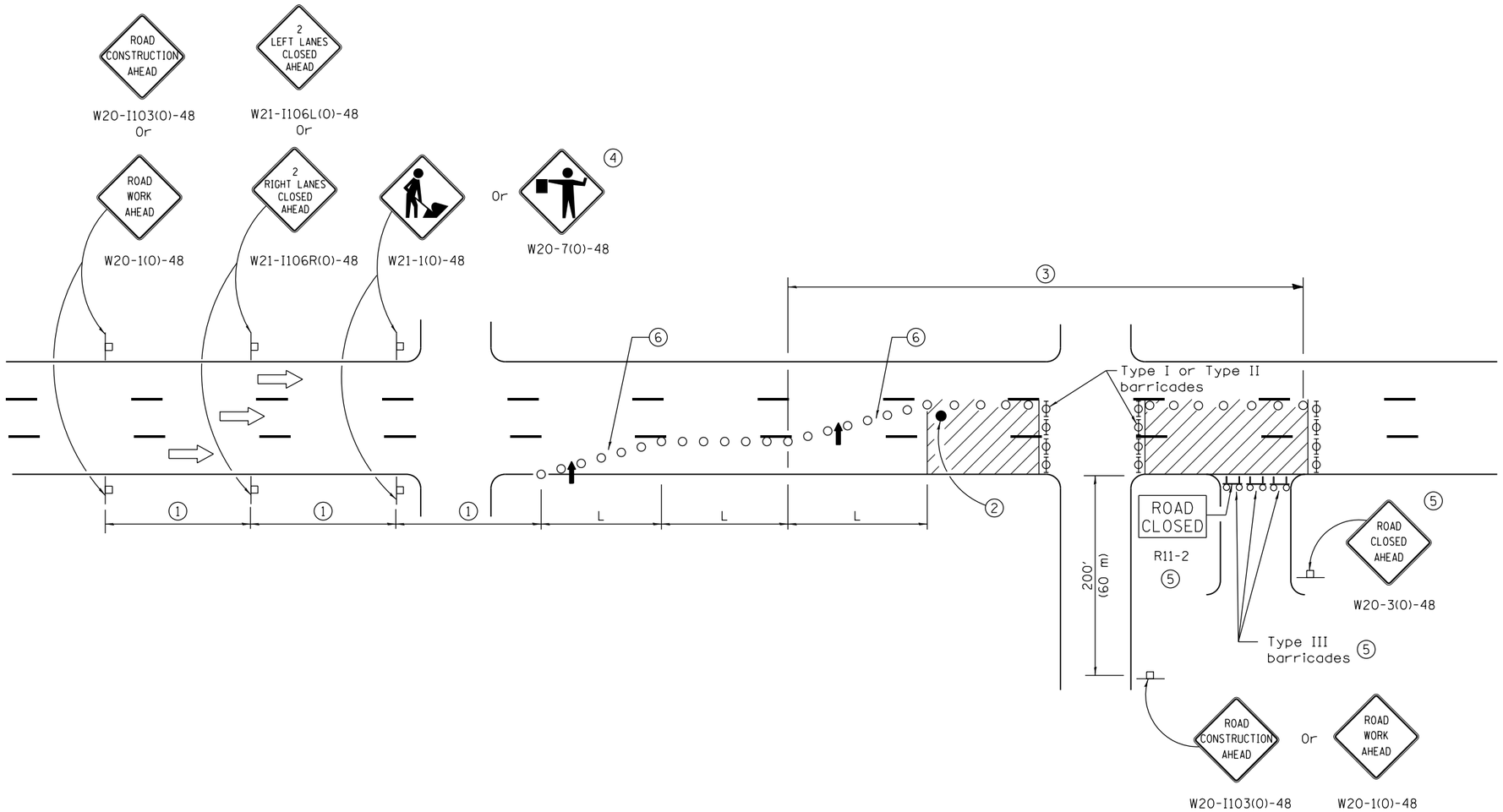

Illinois Department of Transportation

APPROVED January 1, 2014
ENGINEER OF SAFETY ENGINEERING

APPROVED January 1, 2014
ENGINEER OF DESIGN AND ENVIRONMENT

ISSUED 1-1-97

URBAN LANE CLOSURE, MULTILANE, 1W OR 2W WITH NONTRAVERSABLE MEDIAN

(Sheet 2 of 2)

STANDARD 701601–09

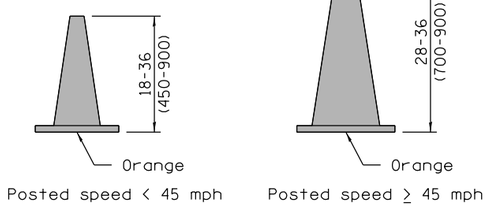

CONE FOR DAYTIME

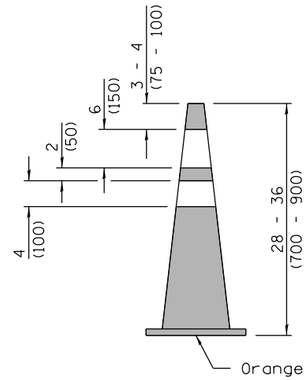

REFLECTORIZED CONE FOR NIGHTTIME

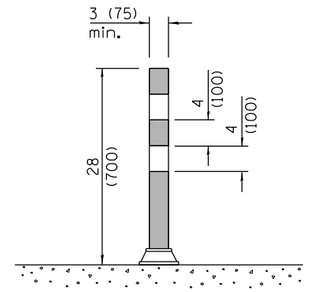

FLEXIBLE DELINEATOR

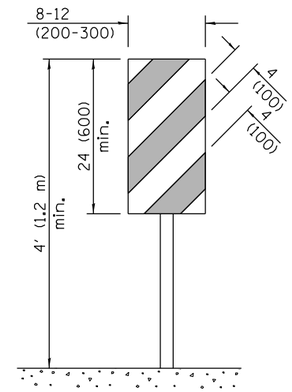

VERTICAL PANEL
POST MOUNTED

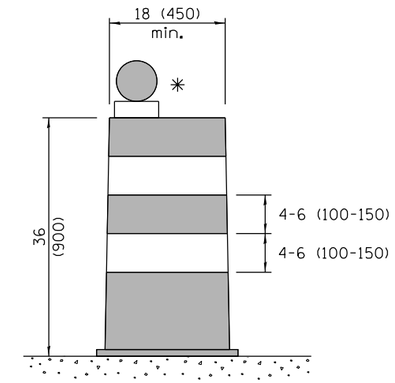

DRUM

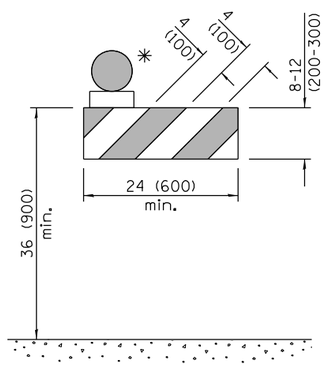

TYPE I BARRICADE

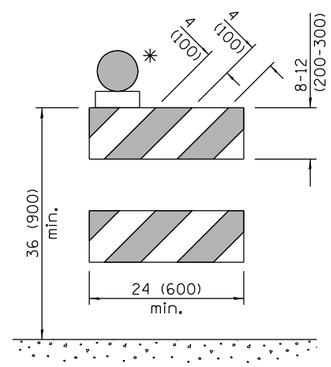

TYPE II BARRICADE

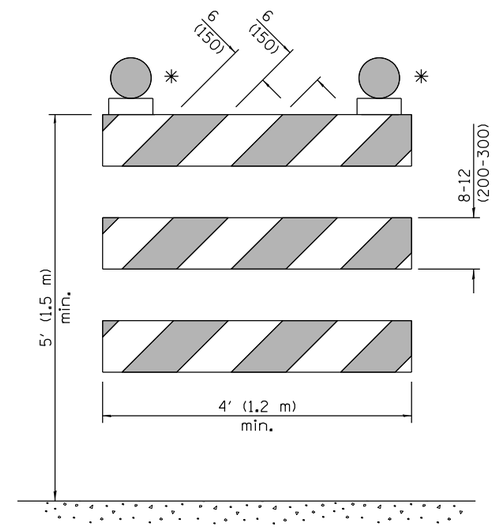

TYPE III BARRICADE

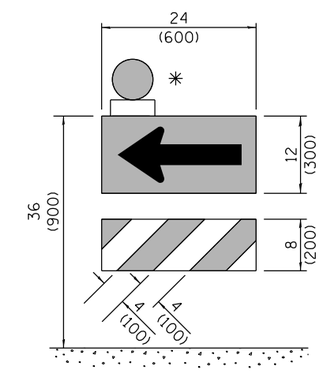

DIRECTION INDICATOR BARRICADE

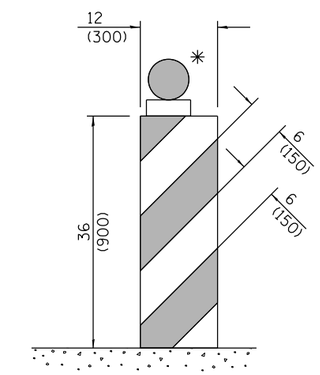

VERTICAL BARRICADE

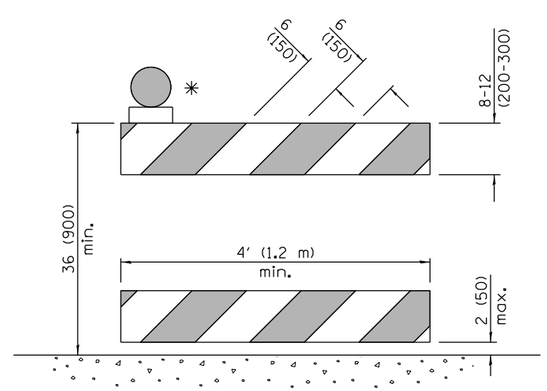

DETECTABLE PEDESTRIAN CHANNELIZING BARRICADE

✳ Warning lights (if required)

GENERAL NOTES

All heights shown shall be measured above the pavement surface.

All dimensions are in inches (millimeters) unless otherwise shown.

DATE	REVISIONS
4-1-16	Add dim's to barricades. Rev.
	note for post mnt. signs.
	Rev. cone dtls. Add W12-I103.
1-1-15	Revised two sign numbers on
	sheet 2. Added note reg.
	PHOTO ENFORCED plaque.

TRAFFIC CONTROL DEVICES

(Sheet 1 of 3)

STANDARD 701901-05

Illinois Department of Transportation

APPROVED April 1, 2016
ENGINEER OF OPERATIONS

APPROVED April 1, 2016
ENGINEER OF DESIGN AND ENVIRONMENT

ISSUED 1-1-97

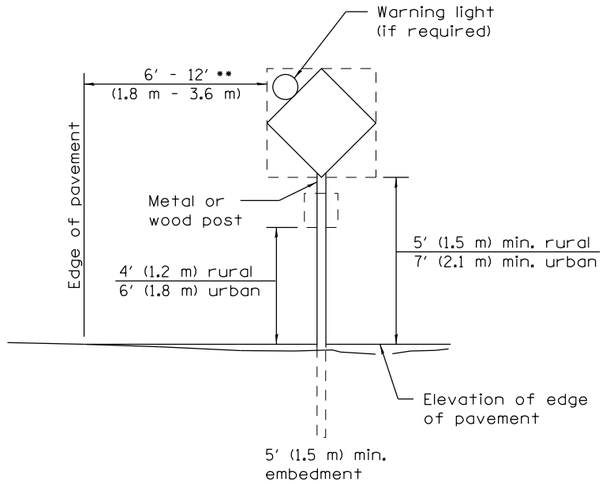

POST MOUNTED SIGNS

•• When curb or paved shoulder are present this dimension shall be 24 (600) to the face of curb or 6′ (1.8 m) to the outside edge of the paved shoulder.

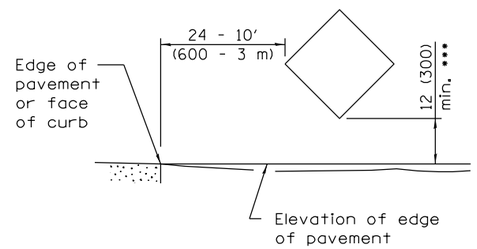

SIGNS ON TEMPORARY SUPPORTS

••• When work operations exceed four days, this dimension shall be 5′ (1.5 m) min. If located behind other devices, the height shall be sufficient to be seen completely above the devices.

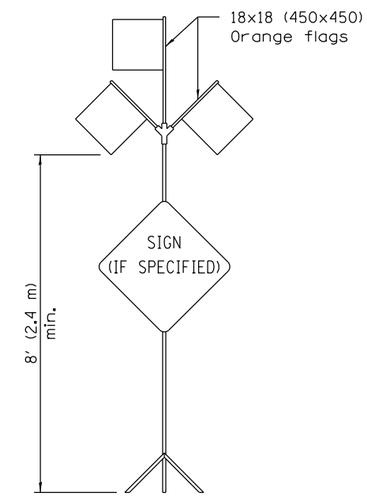

HIGH LEVEL WARNING DEVICE

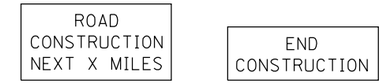

G20-I104(0)-6036 G20-I105(0)-6024

This signing is required for all projects 2 miles (3200 m) or more in length.

ROAD CONSTRUCTION NEXT X MILES sign shall be placed 500′ (150 m) in advance of project limits.

END CONSTRUCTION sign shall be erected at the end of the job unless another job is within 2 miles (3200 m).

Dual sign displays shall be utilized on multi-lane highways.

WORK LIMIT SIGNING

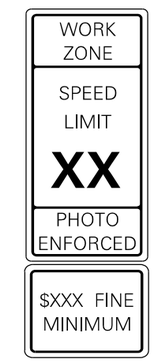

W21-I115(0)-3618

R2-1-3648

R10-I108p-3618 ••••

R2-I106p-3618

Sign assembly as shown on Standards or as allowed by District Operations.

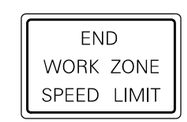

G20-I103(0)-6036

This sign shall be used when the above sign assembly is used.

HIGHWAY CONSTRUCTION SPEED ZONE SIGNS

•••• R10-I108p shall only be used along roadways under the juristiction of the State.

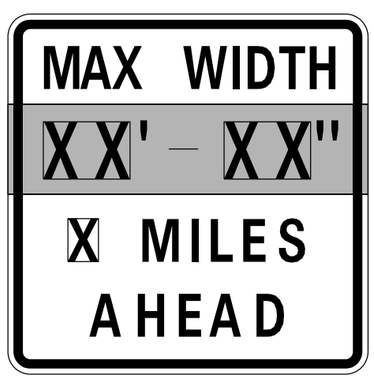

W12-I103-4848

WIDTH RESTRICTION SIGN

XX′-XX″ width and X miles are variable.

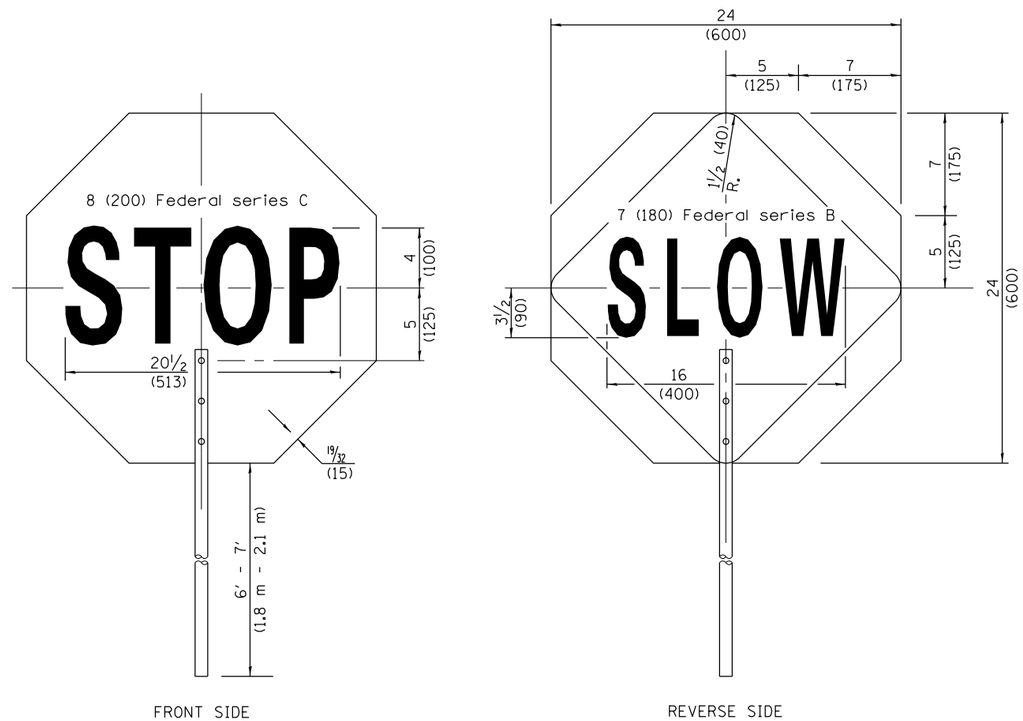

FLAGGER TRAFFIC CONTROL SIGN

Illinois Department of Transportation

APPROVED April 1, 2016
ENGINEER OF OPERATIONS

APPROVED April 1, 2016
ENGINEER OF DESIGN AND ENVIRONMENT

ISSUED 1-1-97

TRAFFIC CONTROL DEVICES

(Sheet 2 of 3)

STANDARD 701901–05

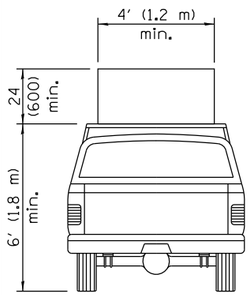

TYPE A
ROOF
MOUNTED

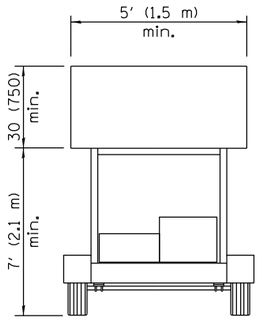

TYPE B
ROOF OR TRAILER
MOUNTED

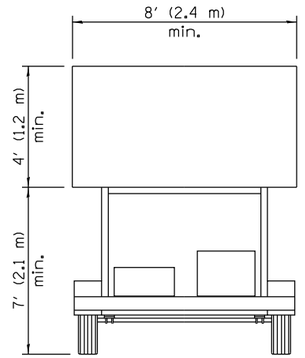

TYPE C
TRAILER
MOUNTED

ARROW BOARDS

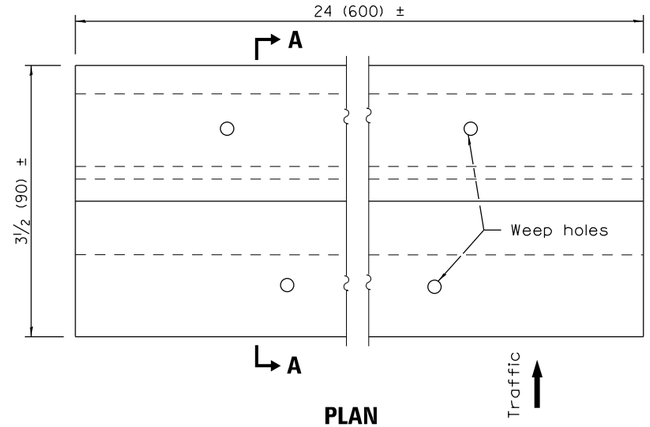

PLAN

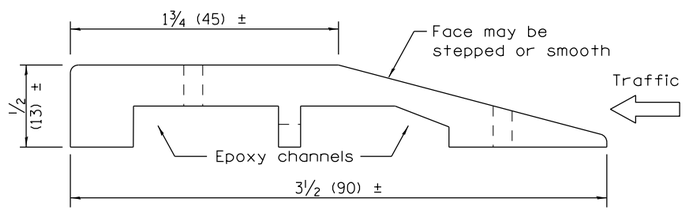

SECTION A–A

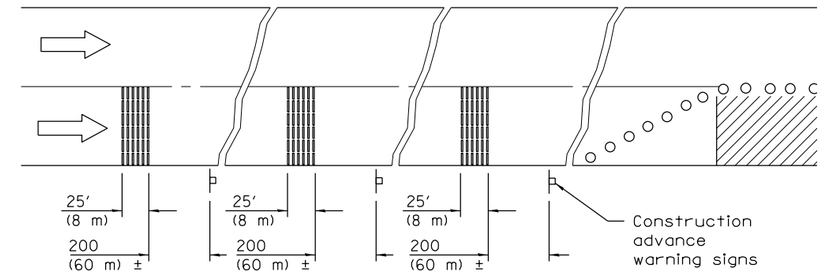

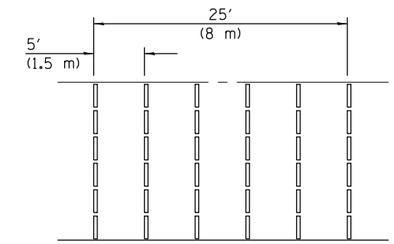

TYPICAL INSTALLATION

TEMPORARY RUMBLE STRIPS

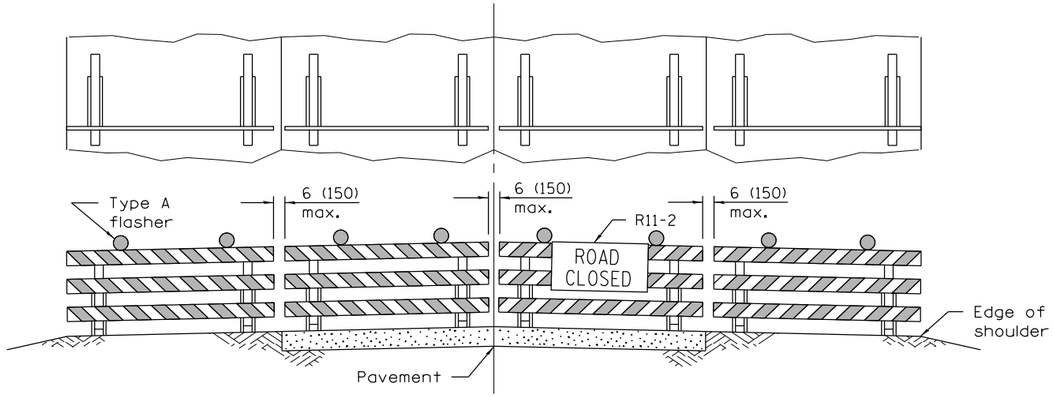

ROAD CLOSED TO ALL TRAFFIC

Reflectorized striping may be omitted on the back side of the barricades. If a Type III barricade with an attached sign panel which meets NCHRP 350 is not available, the sign may be mounted on an NCHRP 350 temporary sign support directly in front of the barricade.

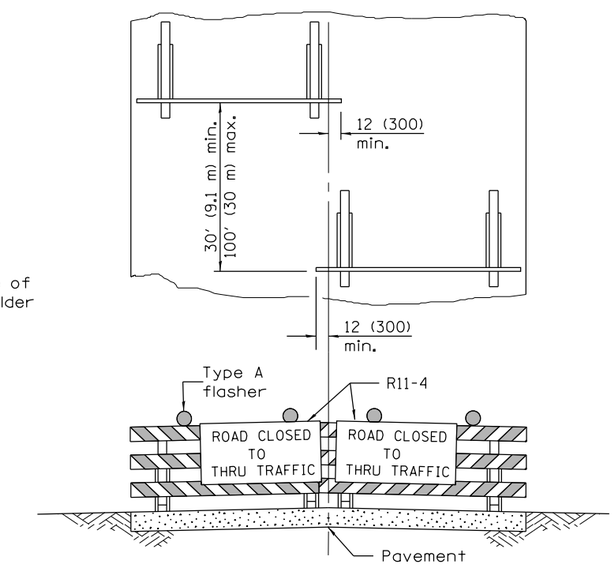

ROAD CLOSED TO THRU TRAFFIC

Reflectorized striping shall appear on both sides of the barricades. If a Type III barricade with an attached sign panel which meets NCHRP 350 is not available, the signs may be mounted on NCHRP 350 temporary sign supports directly in front of the barricade.

TYPICAL APPLICATIONS OF
TYPE III BARRICADES CLOSING A ROAD

Illinois Department of Transportation

APPROVED April 1, 2016
ENGINEER OF OPERATIONS
APPROVED April 1, 2016
ENGINEER OF DESIGN AND ENVIRONMENT

ISSUED 1-1-97

TRAFFIC CONTROL DEVICES

(Sheet 3 of 3)

STANDARD 701901–05