STATE OF ILLINOIS
COUNTY OF LAKE
PLANS FOR PROPOSED
2016 PASSAGE NETWORK TRAFFIC COUNTERS
SECTION 16-00999-22-TL

INDEX OF SHEETS

SHEET No.	DESCRIPTION
1	COVER SHEET
2	GENERAL NOTES
3	LOCATION MAP
4	SUMMARY OF QUANTITIES
5 - 10	PLAN SHEETS
11 - 13	LAKE COUNTY STANDARD DETAILS
14 - 37	IDOT HIGHWAY STANDARDS
38	DISTRICT ONE - STANDARD TRAFFIC SIGNAL DESIGN DETAILS

IDOT HIGHWAY STANDARDS

000001-06 (8 SHTS)	701001-02	701006-05
701106-02	701201-04	701301-04
701421-07	701501-06	701601-09 (2 SHTS)
701606-10	701701-10	701801-06 (2 SHTS)
701901-05 (3 SHTS)		

LCDOT STANDARD DETAILS

LC7000	LC7003	LC7004
LC7005	LC7200	

SEE SHEET 3
FOR
PROJECT LOCATIONS

WILLIAM C. EIDSON
062-057944
LICENSED PROFESSIONAL ENGINEER OF ILLINOIS

FOR UNDERGROUND UTILITY LOCATIONS, CALL

J. U. L. I. E.

TOLL FREE
800-892-0123

BUILDING LAKE COUNTY'S EFFECTIVE TRANSPORTATION SYSTEM TODAY

Plans Prepared By: LakeCounty Division of Transportation

Signature: William C. Eidson
Date: 3/14/2016
Illinois License No: 062-057944
Expiration Date: 11/30/2017
Field: CIVIL
Approved By: P.J. Trigg /BB County Engineer
Date: 3/16/16

REVISIONS / REMARKS					
NO.	DESCRIPTION	DATE	BY	SURVEYOR:	/ /
		/ /		DSGNR/LIAISON:	
		/ /		PLOTTED BY:	khd18691 3/9/2016

FILE NAME: U:\DOT\Traffic\2016 Traffic Counter Installation\Plans\Traffic Counters.dgn

2016 PASSAGE NETWORK TRAFFIC COUNTERS
COVER SHEET

ROUTE	SECTION	SECTION NUMBER	SHEET	SHEETS
VAR	VAR	16-00999-22-TL	1	38

LCDOT GENERAL NOTES
(Revised 1/5/15)

1. GENERAL

   a. All construction shall be done according to the State of Illinois "Standard Specifications for Road and Bridge Construction" adopted April 1, 2016; the "Supplemental Specifications and Recurring Special Provisions, adopted April 1, 2016; the latest edition of the "Illinois Manual on Uniform Traffic Control devices for Streets and Highways"; the details in these plans, and the Special Provisions included in the contract documents.

   b. The Contractor shall notify the Engineer at least 72 hours prior to beginning work and shall coordinate all construction operations with the Engineer.

   c. The Contractor shall coordinate his/her work with any adjacent projects that are or may be under construction.

   d. The Contractor shall verify all dimensions and existing conditions in the field prior to ordering materials and beginning construction. Where new work is proposed to meet existing features, it shall be the Contractor's responsibility to field check all dimensions and elevations and notify the Engineer of discrepancies before proceeding with construction.

   e. The Contractor shall provide access to abutting properties at all times during construction, except for brief periods of interruption. The Contractor shall notify the property owner no less than 24 hours in advance of the interruption of access and/or services. The notification will include the time and duration of the interruption. The cost to provide access shall be paid for and included in the cost of TRAFFIC CONTROL AND PROTECTION (SPECIAL)

2. REMOVAL

   a. The Contractor shall saw cut the existing pavement, concrete curb & gutter, median, hot-mix asphalt shoulder; sidewalk; and/or other appurtenances as shown on the plans, to separate the existing material to be removed, by means of an approved concrete saw to a depth shown on the plans or as directed by the Engineer. This work shall be included in the cost of the item being removed.

   The Contractor shall be required to saw vertical cuts so as to form clean vertical joints. Should the Contractor deface any edge, a new sawed joint shall be provided and any additional work, including removal and replacement, shall be done at the Contractor's expense.

   b. All excess material shall be disposed of offsite on the day it is excavated or removed.

   c. The Contractor is prohibited from burning any material within or adjacent to the project limits. All excess or waste material shall be hauled away from the project site by the contractor and legally disposed of outside the right-of-way. No extra compensation will be allowed the contractor for any expense incurred by complying with the requirements

3. DRAINAGE

   a. Unless otherwise noted on the plans, the existing drainage facilities shall remain in use during the period of construction. During construction operations the Contractor shall ensure positive site drainage at the conclusion of each day. Site drainage may be achieved by ditching, pumping, or any other method acceptable to the Engineer.

   b. During the construction operation when any loose material is deposited in the flow line of ditches, gutters or drainage structures so the natural flow of water is obstructed, the material shall be removed at the close of each working day.

   At the conclusion of the construction operations all drainage structures shall be free from all dirt and debris. This work will not be paid for separately but shall be considered included in the unit costs of the various Temporary Erosion Control Systems e.g. INLET FILTERS, INLET PROTECTION SPECIAL, TEMPORARY DITCH CHECKS, etc…

4. LANDSCAPING: Phosphorus Fertilizer Nutrient **shall not** be used on Lake County Highways.

5. SIGNS

   a. The Contractor will be required to relocate or remove and replace signs which interfere with his\her construction operations, and to temporarily reset all such signs during construction operations according to **Article 107.25 of the "Standard Specifications".**

      - All unused signs shall be returned to the County.
      - Longer posts may be required at some temporary or permanent sign locations to maintain proper sign elevations.

6. UTILITIES

   a. Location information for underground utility facilities shown on the plans and/or included in the Contract Specifications represents the best information provided to LCDOT, and is only included for the convenience of the Contractor. LCDOT assumes no responsibility for the sufficiency or the accuracy of the location information provided.

   b. Before starting any excavation, the Contractor shall contact "JULIE" at 1-800-892-0123 for field locations of buried electric, telephone, gas, water, sewer, cable, etc.., utility lines (minimum 48 hours notification is required).

   c. The Contractor shall be responsible for any damage or destruction of public or private property according to the special provisions and Article 107.20 of the "Standard Specifications". The Contractor shall restore such property at his/her own expense. The Contractor shall use all necessary precautions and protective measures required to maintain existing utilities, sewers, and appurtenances that must be kept in operation. In particular, the Contractor will take adequate measures to prevent the undermining of utilities and sewers which are still in service.

7. EQUIPMENT TESTING AND DELIVERY

   a. Contractor shall be responsible for activating and testing the equipment and detectors prior to installation at the Trafficware vendor's Chicago area office with LCDOT personnel in attendance. Contractor shall contact LCDOT Traffic Signal Engineer at least 5 business days in advance to schedule equipment testing by calling 847-377-7474. Prior to leaving the vendor's office, the contractor shall label each component with its installation location and document the equipment serial numbers on a field installation drawing. All equipment to be installed at one location shall be boxed together with the intersection name prominently written on the outside.

   b. Any equipment and materials included in the specifications that are not required for the equipment installation shall be placed in their original packaging and returned to the Lake County Division of Transportation (LCDOT) Traffic Signal Engineer by appointment, unless otherwise indicated in these specifications.

8. MISCELLANEOUS

   a. The Contractor shall provide temporary toilet facilities for the use of all the Contractors' personnel employed on the work site, and shall maintain same in proper sanitary condition. The temporary facilities shall include hand sanitizing stations. At the completion of the project, the facilities shall be removed and the premises left clean. The Engineer shall approve the location of the temporary toilets. The cost of this work shall be included in the unit bid prices and no additional compensation will be allowed.

   b. Generally 10 foot transitions shall be used to match proposed items of work to existing items in the field, unless otherwise shown on the plans. The transitions shall be paid for at the contract unit price for the proposed item of work specified.

   c. The Contractor shall not cross completed surface course, or existing pavement not scheduled to be removed, with construction equipment which may damage the pavement.

   d. The Contractor's attention is called to the fact that some quantities are given in both summary form and on the plan sheets. Care should be taken to avoid duplication of quantities.

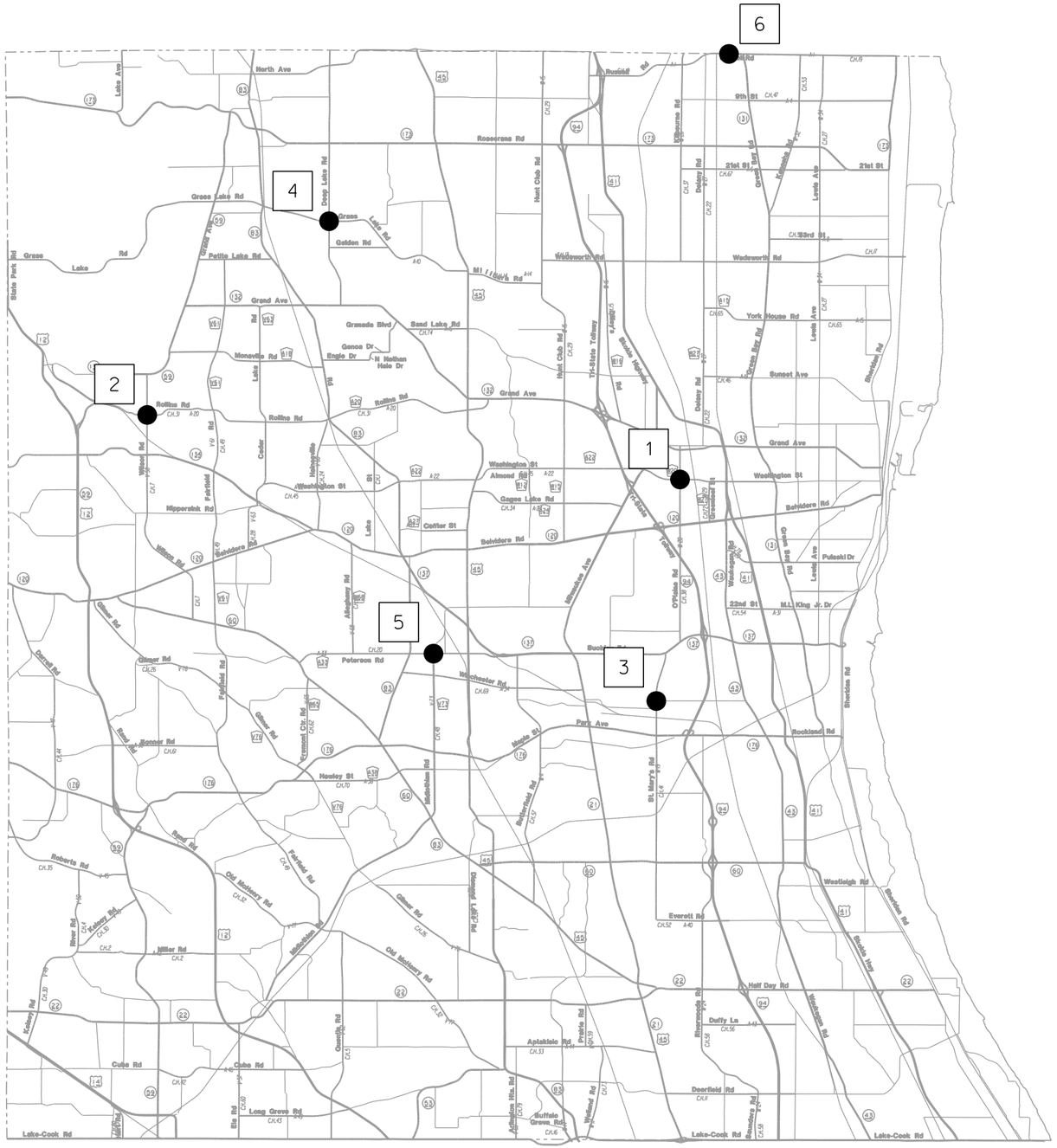

SUMMARY OF LOCATIONS

	SHEET #	LOCATION NAME	BID TYPE
1	5	WASHINGTON STREET AT O'PLAINE ROAD	BASE
2	6	ROLLINS ROAD AT WILSON ROAD	BASE
3	7	ST. MARY'S ROAD AT ATKINSON AVENUE	BASE
4	8	DEEP LAKE ROAD AT GRASS LAKE ROAD	ALT A
5	9	PETERSON ROAD AT MIDLOTHIAN ROAD	ALT B
6	10	RUSSELL ROAD AT TRUMPET STREET	ALT C

REVISIONS / REMARKS

NO.	DESCRIPTION	DATE	BY
		__/__/__	
		__/__/__	

SURVEYOR: ___/___
DSGNR/LIAISON: ___
PLOTTED BY: khdl8691 3/9/2016

LakeCounty
Division of Transportation

2016 PASSAGE NETWORK TRAFFIC COUNTERS

LOCATION MAP

ROUTE	SECTION	SECTION NUMBER	SHEET	SHEETS
VAR	VAR	16-00999-22-TL	3	38

FILE NAME: U:\DOT\Traffic\2016 Traffic Counter Installation\Plans\Traffic Counters.dgn

SUMMARY OF QUANTITIES - BASE BID

NO.	CODE NO.	ITEM	UNIT	Washington Street & O'Plaine Road	Rollins Road & Wilson Road	St. Mary's Road & Atkinson Road	BASE BID TOTAL
1	85000200	MAINTENANCE OF EXISTING TRAFFIC SIGNAL INSTALLATION	EACH	1	1	1	3
2	87301225	ELECTRIC CABLE IN CONDUIT, SIGNAL NO. 14 3C	FOOT	225	85	400	710
3	LC800863	DETECTOR BASE STATION	EACH	1	1	1	3
4	LC800864	LONG RANGE DIRECTIONAL ANTENNA	EACH	2	1	0	3
5	LC800865	WIRELESS DETECTOR UNIT	EACH	8	4	2	14
6	LC800866	DETECTOR SEALANT PACKAGE	EACH	10	5	2	17
7	LC800867	INSTALLATION TOOLKIT	L SUM				1
8	X0324912	RADIO ANTENNA	EACH	0	1	1	2
9	X7010216	TRAFFIC CONTROL AND PROTECTION, (SPECIAL)	L SUM				1
10	XX008788	WIRELESS ACCESS POINT	EACH	1	1	1	3

NO.	CODE NO.	ITEM	UNIT	ALTERNATIVE BID A Deep Lake Road & Grass Lake Road	ALTERNATIVE BID B Midlothian Road & Peterson Road	ALTERNATIVE BID C Russell Road & Trumpet Street
1	85000200	MAINTENANCE OF EXISTING TRAFFIC SIGNAL INSTALLATION	EACH	1	1	1
2	87301225	ELECTRIC CABLE IN CONDUIT, SIGNAL NO. 14 3C	FOOT	190	195	75
3	LC800863	DETECTOR BASE STATION	EACH	1	1	1
4	LC800864	LONG RANGE DIRECTIONAL ANTENNA	EACH	1	2	1
5	LC800865	WIRELESS DETECTOR UNIT	EACH	4	6	2
6	LC800866	DETECTOR SEALANT PACKAGE	EACH	5	7	2
7	LC800867	INSTALLATION TOOLKIT	L SUM			
8	X0324912	RADIO ANTENNA	EACH	1	0	1
9	X7010216	TRAFFIC CONTROL AND PROTECTION, (SPECIAL)	L SUM	1	1	1
10	XX008788	WIRELESS ACCESS POINT	EACH	1	1	1

CABLE SCHEMATIC

SCHEDULE OF QUANTITIES

ITEM	UNIT	QUANTITY
MAINTENANCE OF EXISTING TRAFFIC SIGNAL INSTALLATION	EACH	1
ELECTRIC CABLE IN CONDUIT, SIGNAL NO. 14 3C	FOOT	225
WIRELESS ACCESS POINT	EACH	1
DETECTOR BASE STATION	EACH	1
LONG RANGE DIRECTIONAL ANTENNA	EACH	2
WIRELESS DETECTOR UNIT	EACH	8
DETECTOR SEALANT PACKAGE	EACH	10

LEGEND

- ● WIRELESS DETECTION UNIT
- [A] WIRELESS ACCESS POINT
- LONG RANGE DIRECTIONAL ANTENNA
- OMNI-DIRECTIONAL ANTENNA
- (C) COAXIAL CABLE (INCLUDED IN WIRELESS ACCESS POINT)

CONSTRUCTION NOTES

1. INSTALL DETECTOR BASE STATION IN EXISTING CONTROLLER CABINET. CONNECT TO EXISTING SWITCH. ALL REQUIRED ETHERNET PATCH CABLES AND JUMPER CABLES SHALL BE INCLUDED IN THE DETECTOR BASE STATION PAY ITEM.

2. INSTALL DETECTOR ACCESS POINT ON COMBINATION MAST ARM POLE AT APPROXIMATE HEIGHT OF 40 FEET. INSTALL LONG RANGE DIRECTIONAL ANTENNAS AND OMNI-DIRECTIONAL ANTENNA. LONG RANGE DIRECTIONAL ANTENNAS SHALL BE INDIVIDUALLY ORIENTED TOWARD WIRELESS DETECTOR UNITS IN ACCORDANCE WITH MANUFACTURER'S RECOMMENDATIONS. OMNI-DIRECTIONAL ANTENNA SHALL BE ORIENTED SO THAT AN UNOBSTRUCTED LINE OF SIGHT IS PROVIDED TO ALL LEFT TURN LANES. DRILL MAST ARM SHAFT AND ADD DRIP LOOP TO CABLE.

3. INSTALL WIRELESS DETECTOR UNIT IN CENTER OF LANE USING INSTALLATION TOOLKIT AND DETECTOR SEALANT PACKAGE.

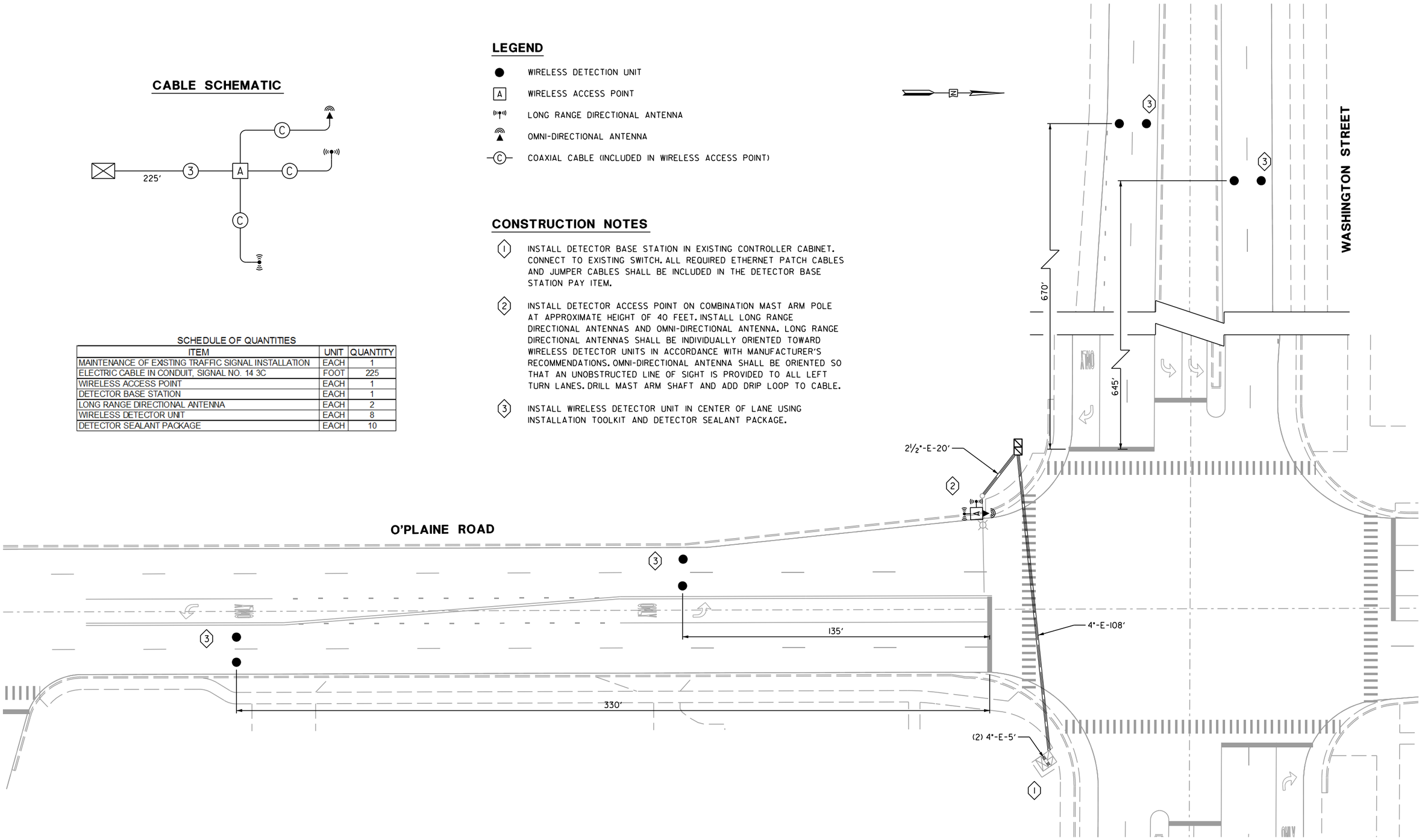

REVISIONS / REMARKS					
NO.	DESCRIPTION	DATE	BY	SURVEYOR:	___/___
		___/___/___	___	DSGNR/LIAISON:	___
		___/___/___	___	PLOTTED BY:	khdl8691 3/9/2016

SCALE HORIZ. 0 20 40

2016 PASSAGE NETWORK TRAFFIC COUNTERS

LakeCounty Division of Transportation

PLAN SHEET

BASE BID - WASHINGTON ST AT O'PLAINE RD

ROUTE	SECTION	SECTION NUMBER	SHEET	SHEETS
VAR	VAR	16-00999-22-TL	5	38

FILE NAME: U:\DOT\Traffic\2016 Traffic Counter Installation\Plans\Traffic Counters.dgn

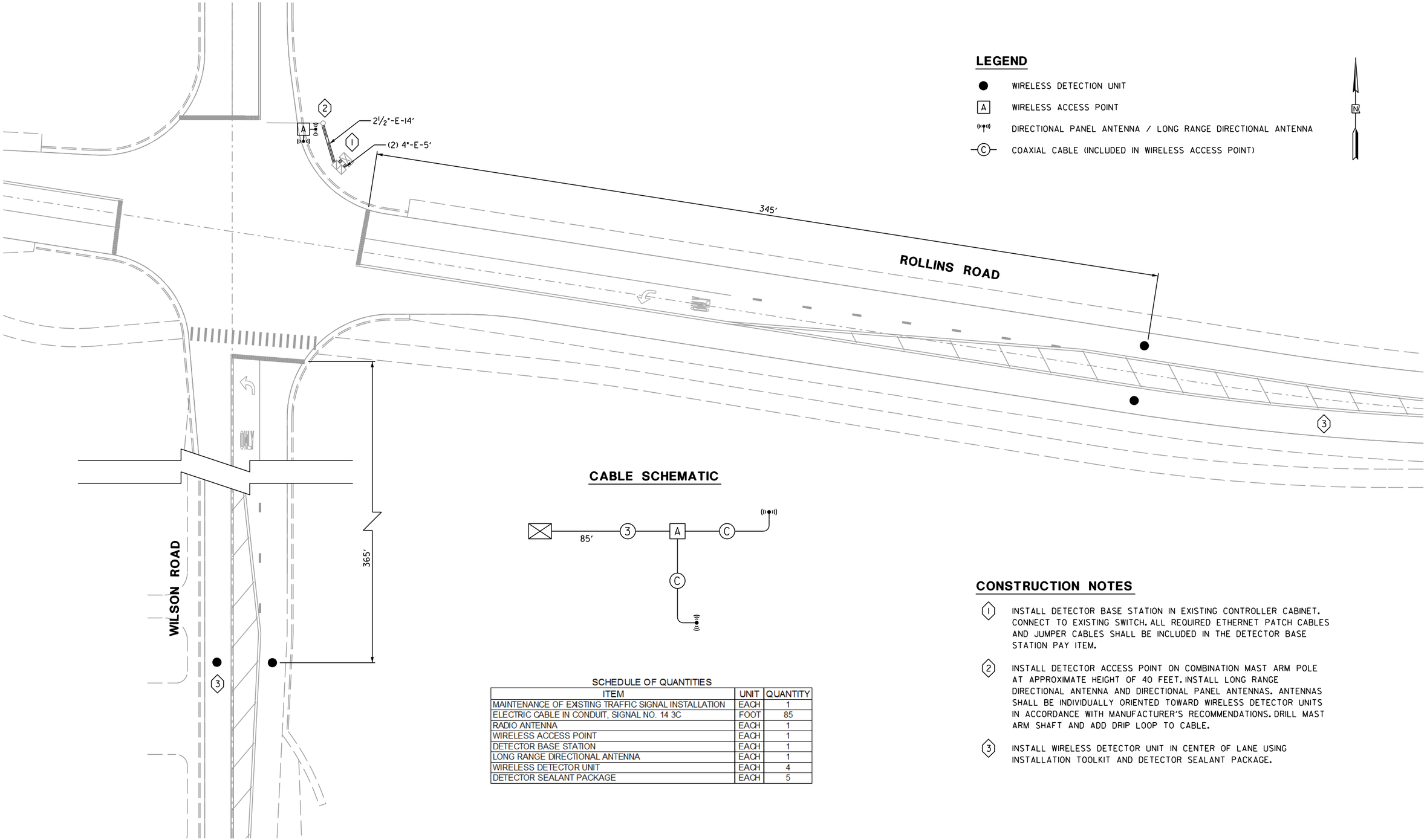

CONSTRUCTION NOTES

1. INSTALL DETECTOR BASE STATION IN EXISTING CONTROLLER CABINET. CONNECT TO EXISTING SWITCH. ALL REQUIRED ETHERNET PATCH CABLES AND JUMPER CABLES SHALL BE INCLUDED IN THE DETECTOR BASE STATION PAY ITEM.

2. INSTALL DETECTOR ACCESS POINT ON COMBINATION MAST ARM POLE AT APPROXIMATE HEIGHT OF 40 FEET. INSTALL LONG RANGE DIRECTIONAL ANTENNA AND DIRECTIONAL PANEL ANTENNAS. ANTENNAS SHALL BE INDIVIDUALLY ORIENTED TOWARD WIRELESS DETECTOR UNITS IN ACCORDANCE WITH MANUFACTURER'S RECOMMENDATIONS. DRILL MAST ARM SHAFT AND ADD DRIP LOOP TO CABLE.

3. INSTALL WIRELESS DETECTOR UNIT IN CENTER OF LANE USING INSTALLATION TOOLKIT AND DETECTOR SEALANT PACKAGE.

SCHEDULE OF QUANTITIES

ITEM	UNIT	QUANTITY
MAINTENANCE OF EXISTING TRAFFIC SIGNAL INSTALLATION	EACH	1
ELECTRIC CABLE IN CONDUIT, SIGNAL NO. 14 3C	FOOT	85
RADIO ANTENNA	EACH	1
WIRELESS ACCESS POINT	EACH	1
DETECTOR BASE STATION	EACH	1
LONG RANGE DIRECTIONAL ANTENNA	EACH	1
WIRELESS DETECTOR UNIT	EACH	4
DETECTOR SEALANT PACKAGE	EACH	5

REVISIONS / REMARKS

NO.	DESCRIPTION	DATE	BY
		__/__/__	
		__/__/__	

SURVEYOR: __/__
DSGNR/LIAISON: __/__
PLOTTED BY: khdl8691 3/9/2016

SCALE HORIZ. 0 20 40

2016 PASSAGE NETWORK TRAFFIC COUNTERS

LakeCounty Division of Transportation

PLAN SHEET

BASE BID - ROLLINS ROAD AT WILSON ROAD

ROUTE	SECTION	SECTION NUMBER	SHEET	SHEETS
VAR	VAR	16-00999-22-TL	6	38

FILE NAME: U:\DOT\Traffic\2016 Traffic Counter Installation\Plans\Traffic Counters.dgn

CABLE SCHEMATIC

CONSTRUCTION NOTES

1. INSTALL DETECTOR BASE STATION IN EXISTING CONTROLLER CABINET. CONNECT TO EXISTING SWITCH. ALL REQUIRED ETHERNET PATCH CABLES AND JUMPER CABLES SHALL BE INCLUDED IN THE DETECTOR BASE STATION PAY ITEM.

2. INSTALL DETECTOR ACCESS POINT ON MAST ARM POLE AT APPROXIMATE HEIGHT OF 20 FEET. INSTALL DIRECTIONAL PANEL ANTENNA AND ORIENTED TOWARD WIRELESS DETECTOR UNITS IN ACCORDANCE WITH MANUFACTURER'S RECOMMENDATIONS. DRILL MAST ARM SHAFT AND ADD DRIP LOOP TO CABLE.

3. INSTALL WIRELESS DETECTOR UNIT IN CENTER OF LANE USING INSTALLATION TOOLKIT AND DETECTOR SEALANT PACKAGE.

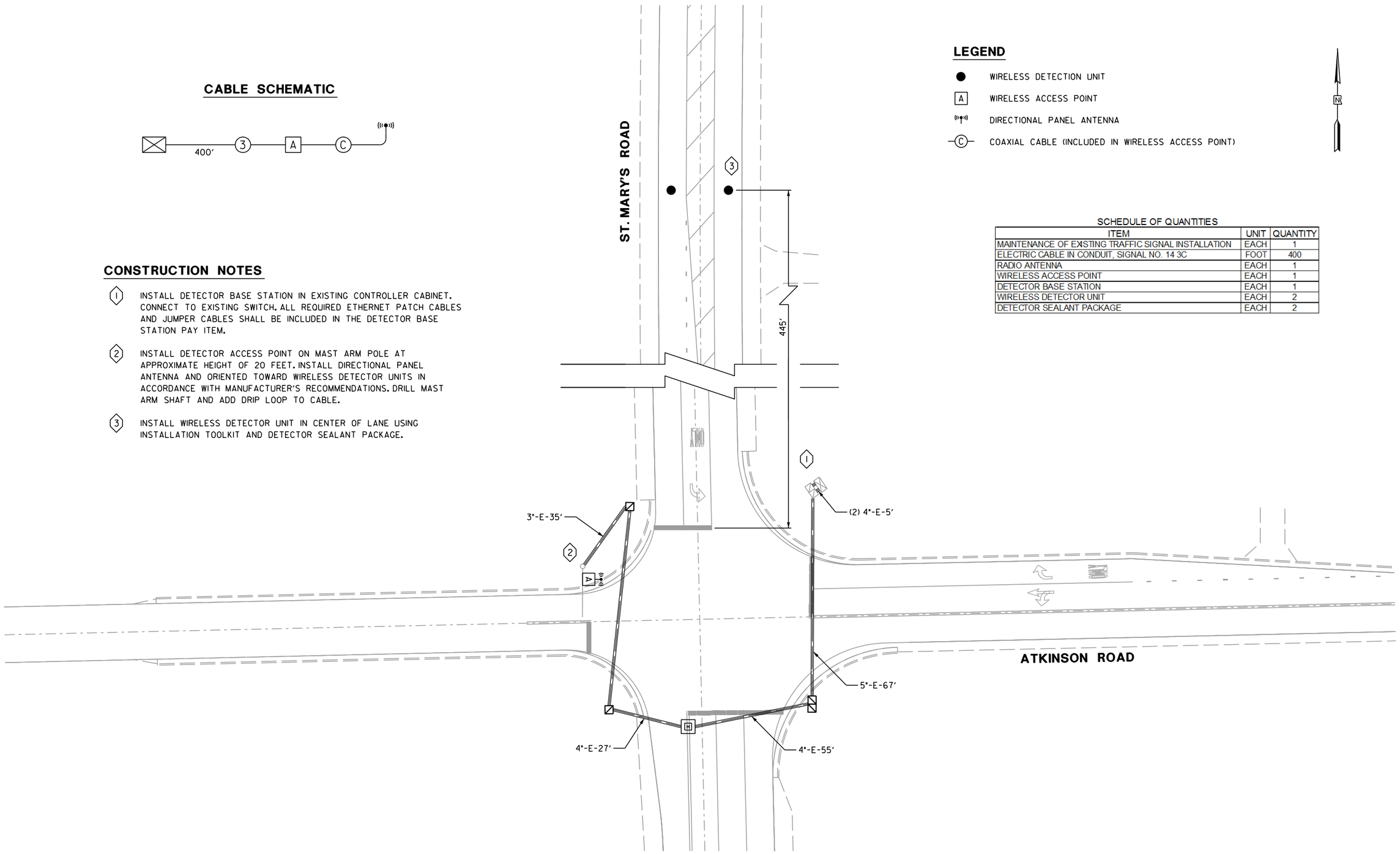

LEGEND

- ● WIRELESS DETECTION UNIT
- [A] WIRELESS ACCESS POINT
- DIRECTIONAL PANEL ANTENNA
- (C) COAXIAL CABLE (INCLUDED IN WIRELESS ACCESS POINT)

N

SCHEDULE OF QUANTITIES

ITEM	UNIT	QUANTITY
MAINTENANCE OF EXISTING TRAFFIC SIGNAL INSTALLATION	EACH	1
ELECTRIC CABLE IN CONDUIT, SIGNAL NO. 14 3C	FOOT	400
RADIO ANTENNA	EACH	1
WIRELESS ACCESS POINT	EACH	1
DETECTOR BASE STATION	EACH	1
WIRELESS DETECTOR UNIT	EACH	2
DETECTOR SEALANT PACKAGE	EACH	2

REVISIONS / REMARKS					
NO.	DESCRIPTION	DATE	BY	SURVEYOR:	___/___
				DSGNR/LIAISON:	
				PLOTTED BY:	khdl8691 3/9/2016

SCALE HORIZ. 0 20 40

2016 PASSAGE NETWORK TRAFFIC COUNTERS

LakeCounty Division of Transportation

PLAN SHEET

BASE BID - ST. MARY'S RD AT ATKINSON AVE

ROUTE	SECTION	SECTION NUMBER	SHEET	SHEETS
VAR	VAR	16-00999-22-TL	7	38

FILE NAME: U:\DOT\Traffic\2016 Traffic Counter Installation\Plans\Traffic Counters.dgn

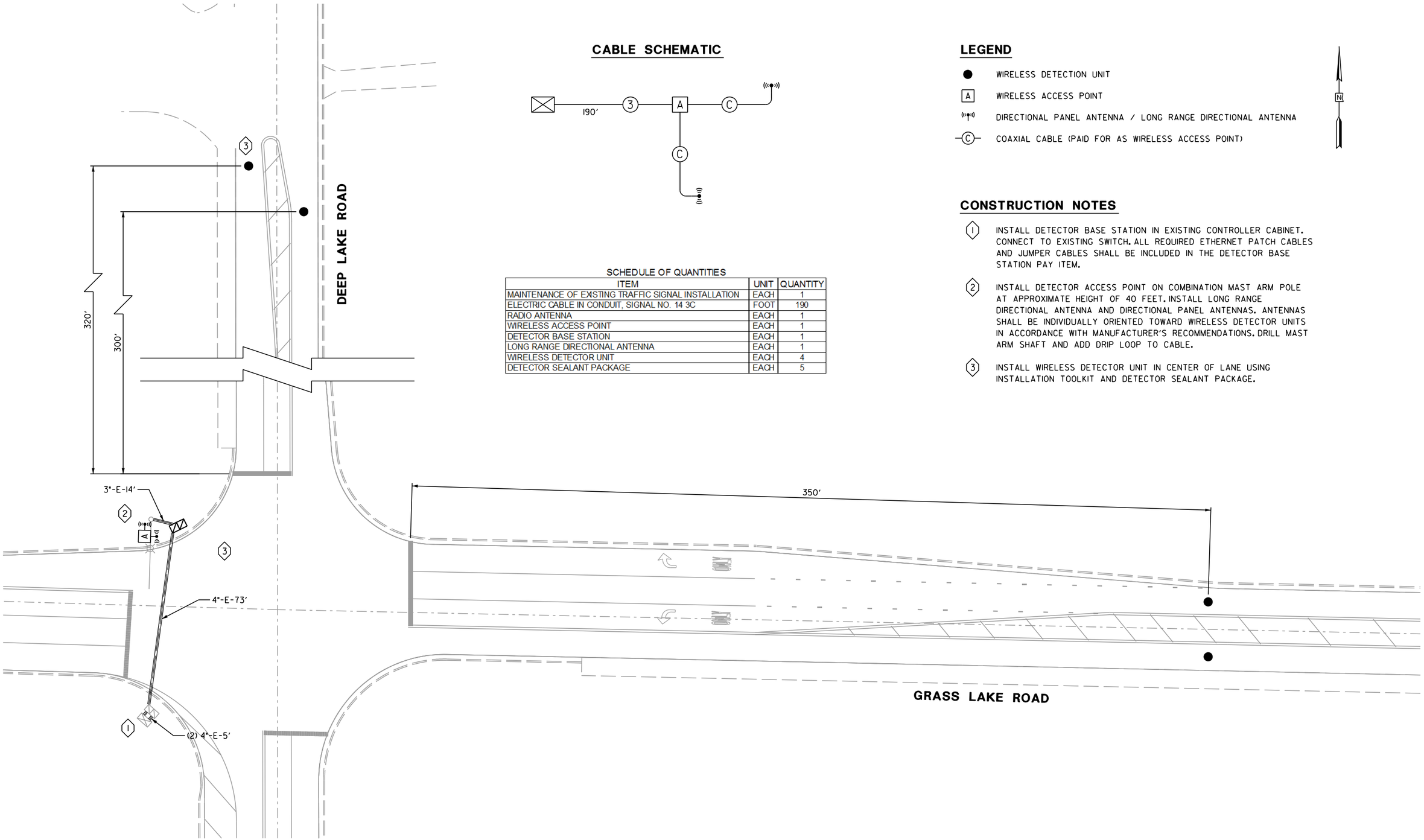

CABLE SCHEMATIC

SCHEDULE OF QUANTITIES

ITEM	UNIT	QUANTITY
MAINTENANCE OF EXISTING TRAFFIC SIGNAL INSTALLATION	EACH	1
ELECTRIC CABLE IN CONDUIT, SIGNAL NO. 14 3C	FOOT	190
RADIO ANTENNA	EACH	1
WIRELESS ACCESS POINT	EACH	1
DETECTOR BASE STATION	EACH	1
LONG RANGE DIRECTIONAL ANTENNA	EACH	1
WIRELESS DETECTOR UNIT	EACH	4
DETECTOR SEALANT PACKAGE	EACH	5

LEGEND

- ● WIRELESS DETECTION UNIT
- [A] WIRELESS ACCESS POINT
- DIRECTIONAL PANEL ANTENNA / LONG RANGE DIRECTIONAL ANTENNA
- (C) COAXIAL CABLE (PAID FOR AS WIRELESS ACCESS POINT)

N

CONSTRUCTION NOTES

1. INSTALL DETECTOR BASE STATION IN EXISTING CONTROLLER CABINET. CONNECT TO EXISTING SWITCH. ALL REQUIRED ETHERNET PATCH CABLES AND JUMPER CABLES SHALL BE INCLUDED IN THE DETECTOR BASE STATION PAY ITEM.
2. INSTALL DETECTOR ACCESS POINT ON COMBINATION MAST ARM POLE AT APPROXIMATE HEIGHT OF 40 FEET. INSTALL LONG RANGE DIRECTIONAL ANTENNA AND DIRECTIONAL PANEL ANTENNAS. ANTENNAS SHALL BE INDIVIDUALLY ORIENTED TOWARD WIRELESS DETECTOR UNITS IN ACCORDANCE WITH MANUFACTURER'S RECOMMENDATIONS. DRILL MAST ARM SHAFT AND ADD DRIP LOOP TO CABLE.
3. INSTALL WIRELESS DETECTOR UNIT IN CENTER OF LANE USING INSTALLATION TOOLKIT AND DETECTOR SEALANT PACKAGE.

REVISIONS / REMARKS					
NO.	DESCRIPTION	DATE	BY	SURVEYOR:	___/___
		__/__/__	__	DSGNR/LIAISON:	___
		__/__/__	__	PLOTTED BY:	khdl8691 3/9/2016

SCALE HORIZ. 0 20 40

2016 PASSAGE NETWORK TRAFFIC COUNTERS

LakeCounty Division of Transportation

PLAN SHEET

ALTERNATE A - DEEP LAKE RD AT GRASS LAKE RD

ROUTE	SECTION	SECTION NUMBER	SHEET	SHEETS
VAR	VAR	16-00999-22-TL	8	38

FILE NAME: U:\DOT\Traffic\2016 Traffic Counter Installation\Plans\Traffic Counters.dgn

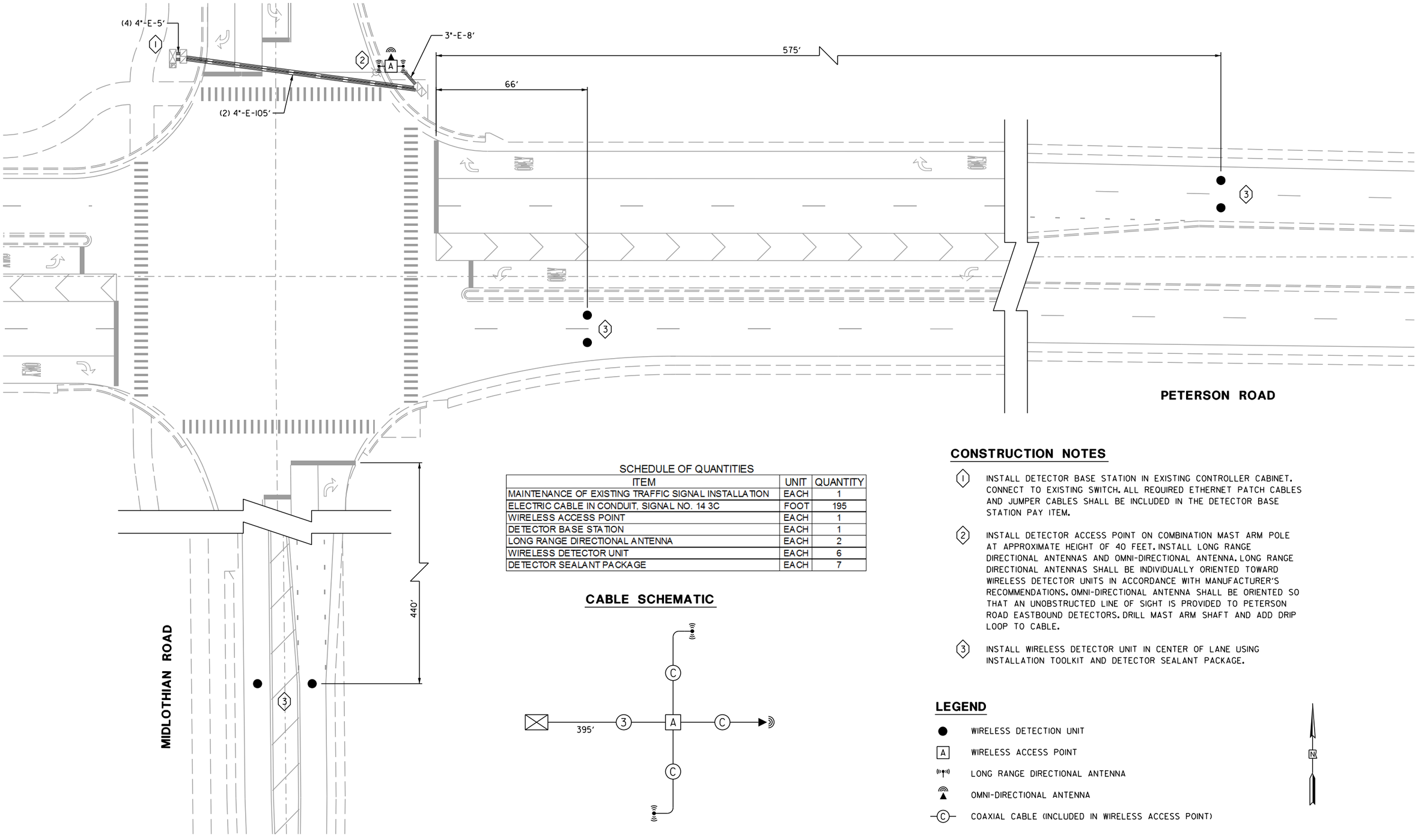

SCHEDULE OF QUANTITIES

ITEM	UNIT	QUANTITY
MAINTENANCE OF EXISTING TRAFFIC SIGNAL INSTALLATION	EACH	1
ELECTRIC CABLE IN CONDUIT, SIGNAL NO. 14 3C	FOOT	195
WIRELESS ACCESS POINT	EACH	1
DETECTOR BASE STATION	EACH	1
LONG RANGE DIRECTIONAL ANTENNA	EACH	2
WIRELESS DETECTOR UNIT	EACH	6
DETECTOR SEALANT PACKAGE	EACH	7

CABLE SCHEMATIC

CONSTRUCTION NOTES

1. INSTALL DETECTOR BASE STATION IN EXISTING CONTROLLER CABINET. CONNECT TO EXISTING SWITCH. ALL REQUIRED ETHERNET PATCH CABLES AND JUMPER CABLES SHALL BE INCLUDED IN THE DETECTOR BASE STATION PAY ITEM.

2. INSTALL DETECTOR ACCESS POINT ON COMBINATION MAST ARM POLE AT APPROXIMATE HEIGHT OF 40 FEET. INSTALL LONG RANGE DIRECTIONAL ANTENNAS AND OMNI-DIRECTIONAL ANTENNA. LONG RANGE DIRECTIONAL ANTENNAS SHALL BE INDIVIDUALLY ORIENTED TOWARD WIRELESS DETECTOR UNITS IN ACCORDANCE WITH MANUFACTURER'S RECOMMENDATIONS. OMNI-DIRECTIONAL ANTENNA SHALL BE ORIENTED SO THAT AN UNOBSTRUCTED LINE OF SIGHT IS PROVIDED TO PETERSON ROAD EASTBOUND DETECTORS. DRILL MAST ARM SHAFT AND ADD DRIP LOOP TO CABLE.

3. INSTALL WIRELESS DETECTOR UNIT IN CENTER OF LANE USING INSTALLATION TOOLKIT AND DETECTOR SEALANT PACKAGE.

LEGEND

- ● WIRELESS DETECTION UNIT
- [A] WIRELESS ACCESS POINT
- LONG RANGE DIRECTIONAL ANTENNA
- OMNI-DIRECTIONAL ANTENNA
- (C) COAXIAL CABLE (INCLUDED IN WIRELESS ACCESS POINT)

N

REVISIONS / REMARKS					
NO.	DESCRIPTION	DATE	BY	SURVEYOR:	___/___
		___/___/___	___	DSGNR/LIAISON:	___
		___/___/___	___	PLOTTED BY:	khdl8691 3/9/2016

SCALE HORIZ. 0 20 40

2016 PASSAGE NETWORK TRAFFIC COUNTERS

LakeCounty Division of Transportation

PLAN SHEET

ALTERNATE B - PETERSON RD AT MIDLOTHIAN RD

ROUTE	SECTION	SECTION NUMBER	SHEET	SHEETS
VAR	VAR	16-00999-22-TL	9	38

FILE NAME: U:\DOT\Traffic\2016 Traffic Counter Installation\Plans\Traffic Counters.dgn

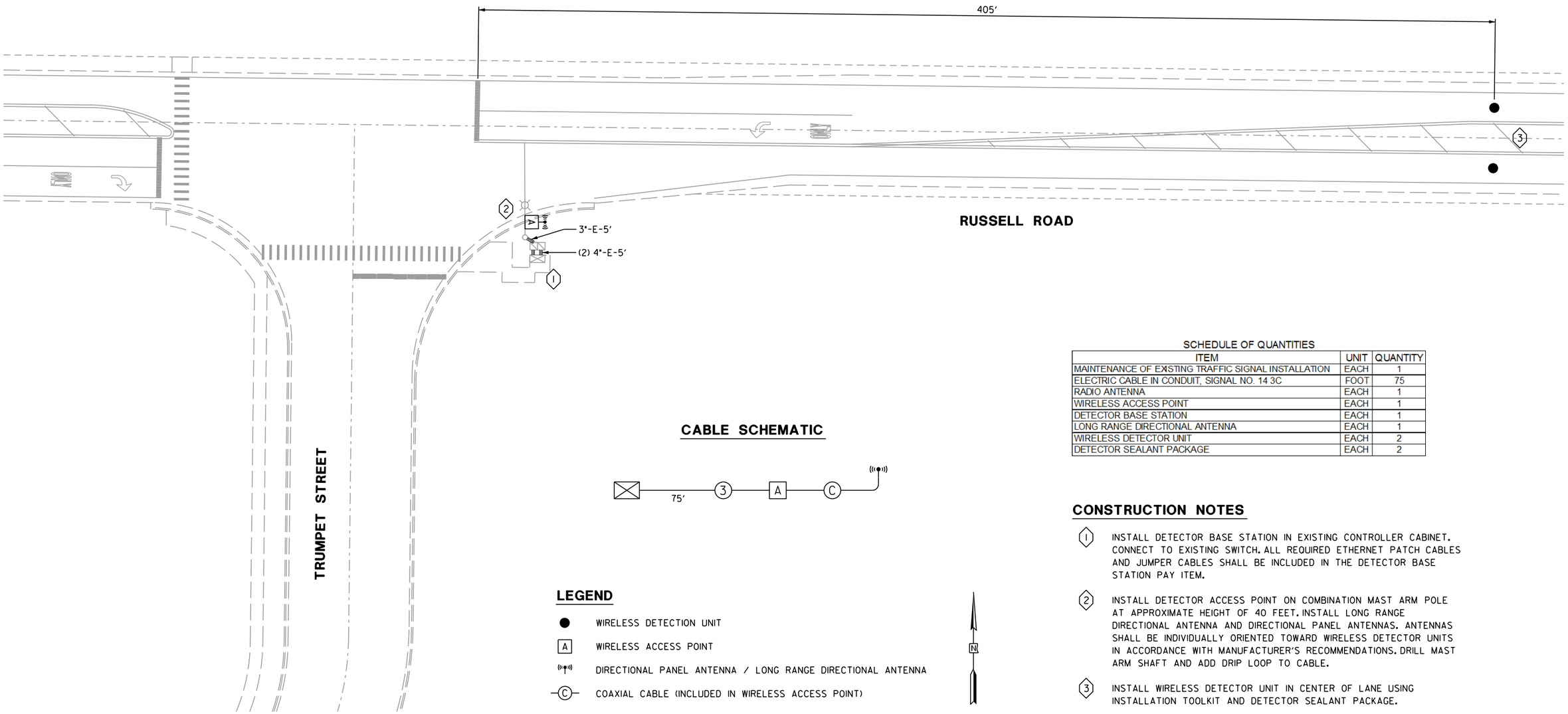

CABLE SCHEMATIC

LEGEND

- ● WIRELESS DETECTION UNIT
- [A] WIRELESS ACCESS POINT
- ((•)) DIRECTIONAL PANEL ANTENNA / LONG RANGE DIRECTIONAL ANTENNA
- —(C)— COAXIAL CABLE (INCLUDED IN WIRELESS ACCESS POINT)

N

SCHEDULE OF QUANTITIES

ITEM	UNIT	QUANTITY
MAINTENANCE OF EXISTING TRAFFIC SIGNAL INSTALLATION	EACH	1
ELECTRIC CABLE IN CONDUIT, SIGNAL NO. 14 3C	FOOT	75
RADIO ANTENNA	EACH	1
WIRELESS ACCESS POINT	EACH	1
DETECTOR BASE STATION	EACH	1
LONG RANGE DIRECTIONAL ANTENNA	EACH	1
WIRELESS DETECTOR UNIT	EACH	2
DETECTOR SEALANT PACKAGE	EACH	2

CONSTRUCTION NOTES

1. INSTALL DETECTOR BASE STATION IN EXISTING CONTROLLER CABINET. CONNECT TO EXISTING SWITCH. ALL REQUIRED ETHERNET PATCH CABLES AND JUMPER CABLES SHALL BE INCLUDED IN THE DETECTOR BASE STATION PAY ITEM.
2. INSTALL DETECTOR ACCESS POINT ON COMBINATION MAST ARM POLE AT APPROXIMATE HEIGHT OF 40 FEET. INSTALL LONG RANGE DIRECTIONAL ANTENNA AND DIRECTIONAL PANEL ANTENNAS. ANTENNAS SHALL BE INDIVIDUALLY ORIENTED TOWARD WIRELESS DETECTOR UNITS IN ACCORDANCE WITH MANUFACTURER'S RECOMMENDATIONS. DRILL MAST ARM SHAFT AND ADD DRIP LOOP TO CABLE.
3. INSTALL WIRELESS DETECTOR UNIT IN CENTER OF LANE USING INSTALLATION TOOLKIT AND DETECTOR SEALANT PACKAGE.

REVISIONS / REMARKS					
NO.	DESCRIPTION	DATE	BY	SURVEYOR:	__/__
		__/__/__	__	DSGNR/LIAISON:	__
		__/__/__	__	PLOTTED BY:	khdl8691 3/9/2016

SCALE HORIZ. 0 20 40

2016 PASSAGE NETWORK TRAFFIC COUNTERS

LakeCounty Division of Transportation

PLAN SHEET

ALTERNATE C - RUSSELL RD AT TRUMPET ST

ROUTE	SECTION	SECTION NUMBER	SHEET	SHEETS
VAR	VAR	16-00999-22-TL	10	38

FILE NAME: U:\DOT\Traffic\2016 Traffic Counter Installation\Plans\Traffic Counters.dgn

TYPICAL APPLICATION OF TRAFFIC CONTROL DEVICES for HIGHWAY CONSTRUCTION, CONTRACT MAINTENANCE and UTILITY OPERATIONS

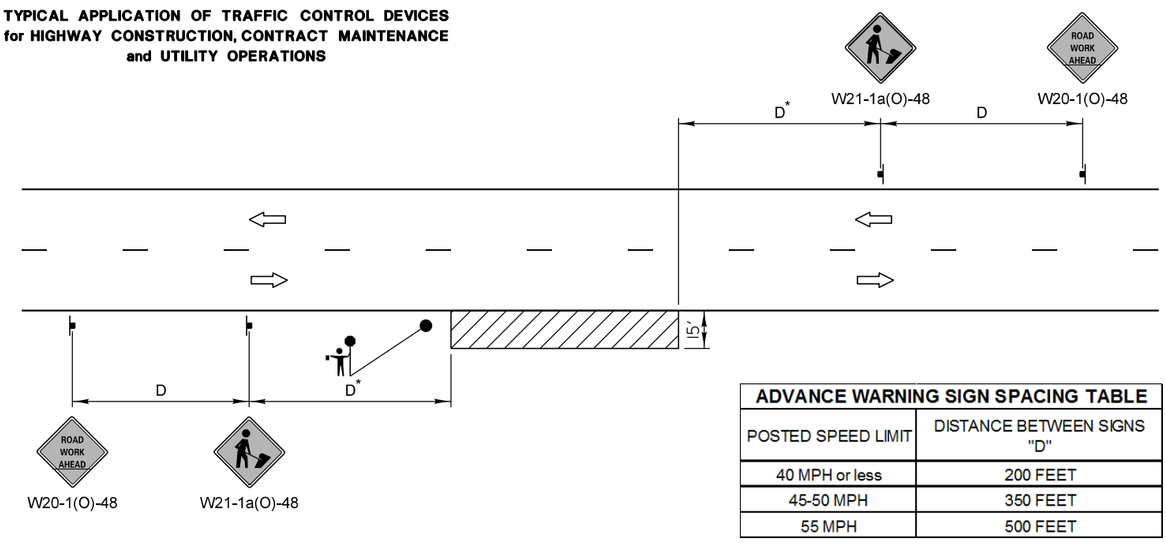

ADVANCE WARNING SIGN SPACING TABLE	
POSTED SPEED LIMIT	DISTANCE BETWEEN SIGNS "D"
40 MPH or less	200 FEET
45-50 MPH	350 FEET
55 MPH	500 FEET

GENERAL NOTES:

This special detail is used at any time, any vehicle, equipment, workers or their activities require a stationary, intermittent or continuous moving operation within 15 feet of the traffic lane, where the average speed is 1 mph or less.

* Minimum distance "D" is shown in the Advance Warning Sign Spacing Table. If the work is a moving operation, the maximum distance "D" may be extended to ½ the length required for one normal working day's operation or 4 miles, whichever is less.

If the work operation does not exceed 60 minutes, traffic control may be according to I.D.O.T. Highway Standard 701301.

SYMBOLS

- WORK AREA
- SIGN ON PORTABLE OR PERMANENT SUPPORT
- FLAGGER WITH TRAFFIC CONTROL SIGN WHEN REQUIRED

NOT TO SCALE

MODIFIED IDOT STANDARD 701011-02

REVISIONS	DATE
Title Block Revision	8/1/09
Reformat LCDOT Standard	7/15/10

LakeCounty Division of Transportation

APPROVED BY: A. KHAWAJA
DATE: APRIL 1, 2007

TWO LANE, TWO WAY, OFF-ROAD OPERATIONS DAY OPERATIONS ONLY

LC7000

TYPICAL APPLICATION OF TRAFFIC CONTROL DEVICES for HIGHWAY CONSTRUCTION, CONTRACT MAINTENANCE and UTILITY OPERATIONS

NOT TO SCALE

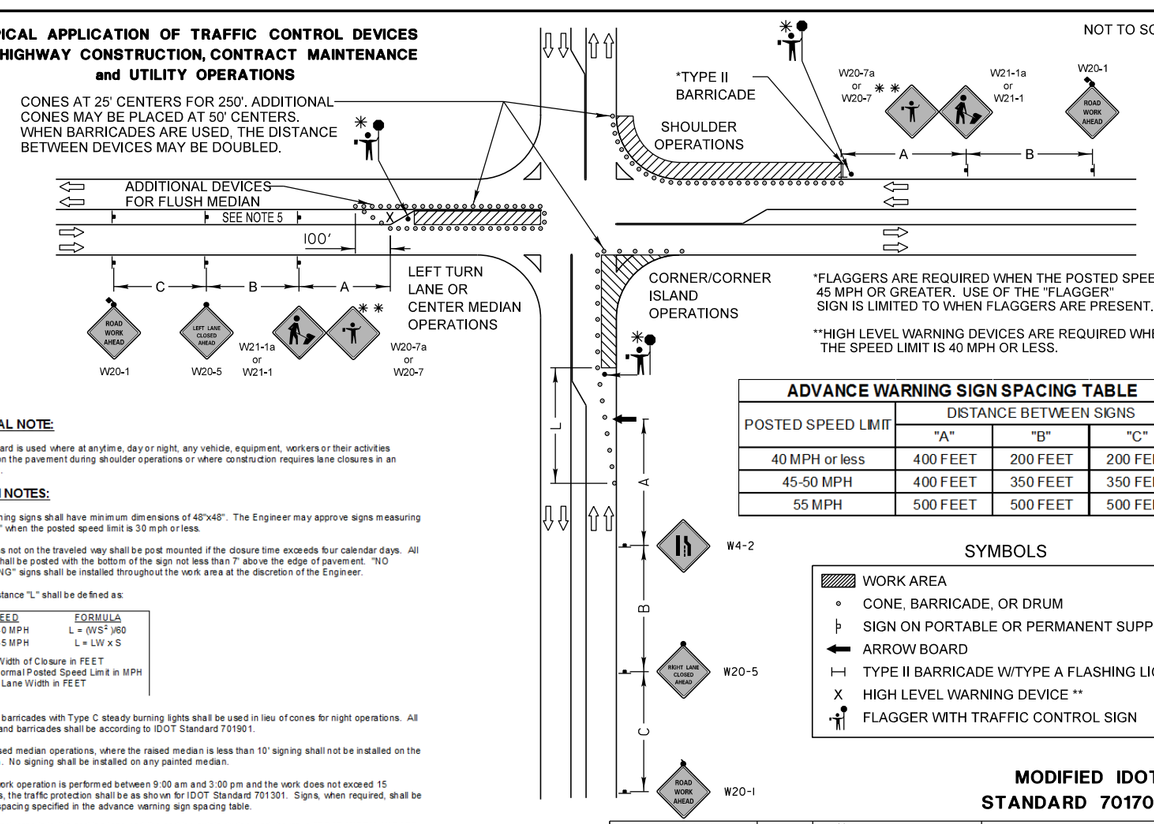

*FLAGGERS ARE REQUIRED WHEN THE POSTED SPEED IS 45 MPH OR GREATER. USE OF THE "FLAGGER" SIGN IS LIMITED TO WHEN FLAGGERS ARE PRESENT.

**HIGH LEVEL WARNING DEVICES ARE REQUIRED WHEN THE SPEED LIMIT IS 40 MPH OR LESS.

ADVANCE WARNING SIGN SPACING TABLE			
POSTED SPEED LIMIT	DISTANCE BETWEEN SIGNS		
	"A"	"B"	"C"
40 MPH or less	400 FEET	200 FEET	200 FEET
45-50 MPH	400 FEET	350 FEET	350 FEET
55 MPH	500 FEET	500 FEET	500 FEET

SYMBOLS

- WORK AREA
- CONE, BARRICADE, OR DRUM
- SIGN ON PORTABLE OR PERMANENT SUPPORT
- ARROW BOARD
- TYPE II BARRICADE W/TYPE A FLASHING LIGHT
- X HIGH LEVEL WARNING DEVICE **
- FLAGGER WITH TRAFFIC CONTROL SIGN

GENERAL NOTE:

This Standard is used where at anytime, day or night, any vehicle, equipment, workers or their activities encroach on the pavement during shoulder operations or where construction requires lane closures in an urban area.

DESIGN NOTES:

1. All warning signs shall have minimum dimensions of 48"x48". The Engineer may approve signs measuring 36"x36" when the posted speed limit is 30 mph or less.
2. All signs not on the traveled way shall be post mounted if the closure time exceeds four calendar days. All signs shall be posted with the bottom of the sign not less than 7' above the edge of pavement. "NO PARKING" signs shall be installed throughout the work area at the discretion of the Engineer.
3. The distance "L" shall be defined as:

SPEED	FORMULA
≤ 40 MPH	$L = (WS^2)/60$
≥ 45 MPH	$L = LW \times S$

W = Width of Closure in FEET
S = Normal Posted Speed Limit in MPH
LW = Lane Width in FEET

4. Type II barricades with Type C steady burning lights shall be used in lieu of cones for night operations. All cones and barricades shall be according to IDOT Standard 701901.
5. For raised median operations, where the raised median is less than 10' signing shall not be installed on the median. No signing shall be installed on any painted median.
6. If the work operation is performed between 9:00 am and 3:00 pm and the work does not exceed 15 minutes, the traffic protection shall be as shown for IDOT Standard 701301. Signs, when required, shall be at the spacing specified in the advance warning sign spacing table.
7. If the work area is in the parking lane and the parking exists during work hours, a "ROAD WORK AHEAD" sign shall be installed in advance of work area at the spacing specified in the Advance Warning Sign Spacing Table and the area protected with cones or barricades.
8. Type A flashing lights shall be used on each approach in advance of the work area during hours of darkness and installed above the first two sign in each series and the high level warning devices.
9. Longitudinal dimensions may be adjusted to fit field conditions.
10. Form BT 725 is required.

MODIFIED IDOT STANDARD 701701-08

REVISIONS	DATE
Revised IDOT Reference	2/1/08
Title Block Revision	8/1/09
Reformat LCDOT Standard	7/15/10
Removed "Worker" & "Flagger" signs	6/26/12

LakeCounty Division of Transportation

APPROVED BY: ANTHONY KHAWAJA
DATE: APRIL 1, 2007

URBAN LANE CLOSURE MULTILANE INTERSECTION

LC7003

NO.	REVISIONS / REMARKS DESCRIPTION	DATE	BY

SURVEYOR: DSGNR/LIAISON: PLOTTED BY: khd869l 3/9/2006

LakeCounty Division of Transportation

2016 PASSAGE NETWORK TRAFFIC COUNTERS

LAKE COUNTY STANDARD DETAILS

ROUTE	SECTION	SECTION NUMBER	SHEET	SHEETS
VAR	VAR	16-00999-22-TL	11	38

FILE NAME: U:\DOT\Traffic\2016 Traffic Counter Installation\Plans\Traffic Counters.dgn

TYPICAL APPLICATION OF TRAFFIC CONTROL DEVICES for HIGHWAY CONSTRUCTION, CONTRACT MAINTENANCE and UTILITY OPERATIONS

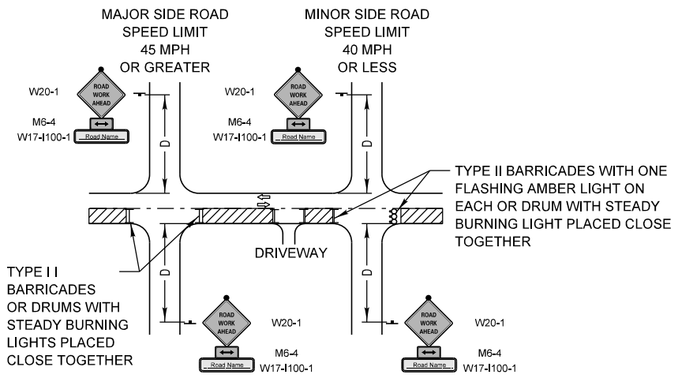

GENERAL NOTE:

This Standard is used where at any time, day or night, any vehicle, equipment, workers or their activities encroach on the pavement or where construction requires lane closures.

DESIGN NOTES:

1. For a side road with a speed limit of 40 mph or less, the closed portion of the main route shall be protected by blocking with Type II barricades or drums, 1/3 of the cross section of the closed portion of the roadway.
2. For a side road with a speed limit of 45 mph or greater, the closed portion of the main route shall be protected by blocking with Type II barricades or drums, 1/2 of the cross section of the closed portion of the roadway.
3. All W20-1 "ROAD WORK AHEAD" signs shall be 48"x48" with fluorescent orange reflective sheeting with an amber Type A flashing light mounted on the sign.
4. When the side road lies between the beginning of the mainline signing and the work zone, a M6-1 Single Headed Arrow shall be used in lieu of the M6-4 Double Headed Arrow.
5. For a lane closure on a side road, use the applicable portions of the appropriate Highway Standard or Traffic Control Detail. The spacing of the signs and barricades or drums shall be adjusted for field conditions as directed by the engineer. The directional arrow shall be covered or removed when no longer consistent with the side road closure.
6. Advance warning signs shall be omitted on driveways unless otherwise noted.
7. The traffic control and protection for side roads and intersections shall be included in the contract lump sum price for "TRAFFIC CONTROL AND PROTECTION, SPECIAL."

SYMBOLS

- WORK AREA
- SIGN ON PORTABLE OR PERMANENT SUPPORT
- TYPE II BARRICADE W/TYPE A FLASHING LIGHT
- DRUM WITH STEADY BURNING LIGHT

ADVANCE WARNING SIGN SPACING TABLE

POSTED SPEED LIMIT	DISTANCE BETWEEN SIGNS "D"
40 MPH or less	200 FEET
45-50 MPH	350 FEET
55 MPH	500 FEET

NOT TO SCALE

MODIFIED IDOT DISTRICT ONE SIDE ROAD DETAIL

REVISIONS	DATE
Title Block Revision	8/1/09
Reformat LCDOT Standard	7/15/10
Use of Drums in lieu Type III Barricade	4/22/14

LakeCounty Division of Transportation

APPROVED BY: ANTHONY KHAWAJA
DATE: APRIL 1, 2007

TRAFFIC CONTROL and PROTECTION for SIDEROADS, INTERSECTIONS and DRIVEWAYS

LC7004

TYPICAL APPLICATION OF TRAFFIC CONTROL DEVICES for HIGHWAY CONSTRUCTION, CONTRACT MAINTENANCE and UTILITY OPERATIONS

NOT TO SCALE

3 LANE ROAD SECTION with 2-WAY LEFT TURN LANE

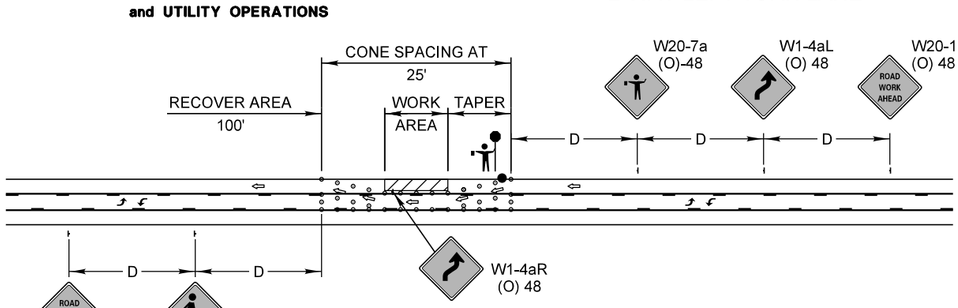

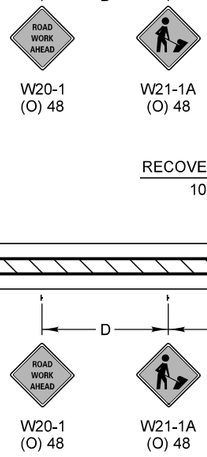

3 LANE ROAD SECTION with FLUSH MEDIAN

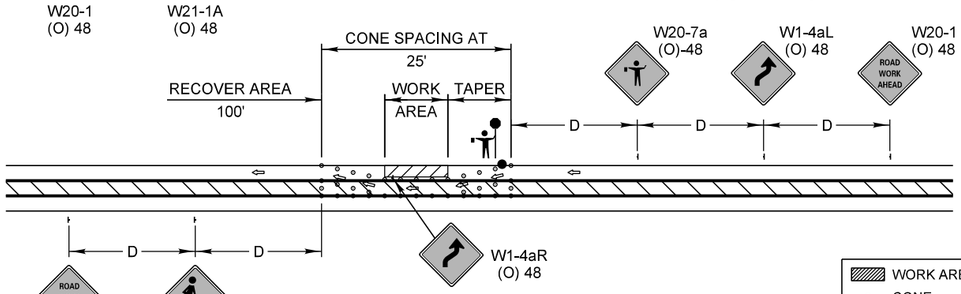

GENERAL NOTE:

This Standard is used where during the day only, any vehicle, equipment, workers or their activities encroach on a 3 lane, two way pavement requiring the closure of one traffic lane.

SYMBOLS

- WORK AREA
- CONE
- SIGN ON PORTABLE OR PERMANENT SUPPORT
- FLAGGER STATION
- FLAGGER WITH SLOW PADDLE

ADVANCE WARNING SIGN SPACING TABLE

POSTED SPEED LIMIT	DISTANCE BETWEEN SIGNS "D"
40 MPH or less	200 FEET
45-50 MPH	350 FEET
55 MPH	500 FEET

LENGTH OF SHIFTING TAPER

POSTED SPEED LIMIT	TAPER LENGTH
30 MPH	100'
35 MPH	125'
40 MPH	150'
45 MPH	275'
50 MPH	300'
55 MPH	325'

REVISIONS	DATE
Title Block Revision	8/1/09
Reformat LCDOT Standard	7/15/10

LakeCounty Division of Transportation

APPROVED BY: A. KHAWAJA
DATE: APRIL 1, 2007

TYPICAL LANE CLOSURE 3 LANE ROAD SECTION

LC7005

NO.	REVISIONS / REMARKS DESCRIPTION	DATE	BY
		/ /	

DSGNR/LIAISON: PLOTTED BY: khd869l 3/9/2006 SURVEYOR: / /

FILE NAME: U:\DOT\Traffic\2016 Traffic Counter Installation\Plans\Traffic Counters.dgn

LakeCounty Division of Transportation

LAKE COUNTY STANDARD DETAILS

2016 PASSAGE NETWORK TRAFFIC COUNTERS

ROUTE	SECTION	SECTION NUMBER	SHEET	SHEETS
VAR	VAR	16-00999-22-TL	12	38

DIRECTION INDICATOR BARRICADES

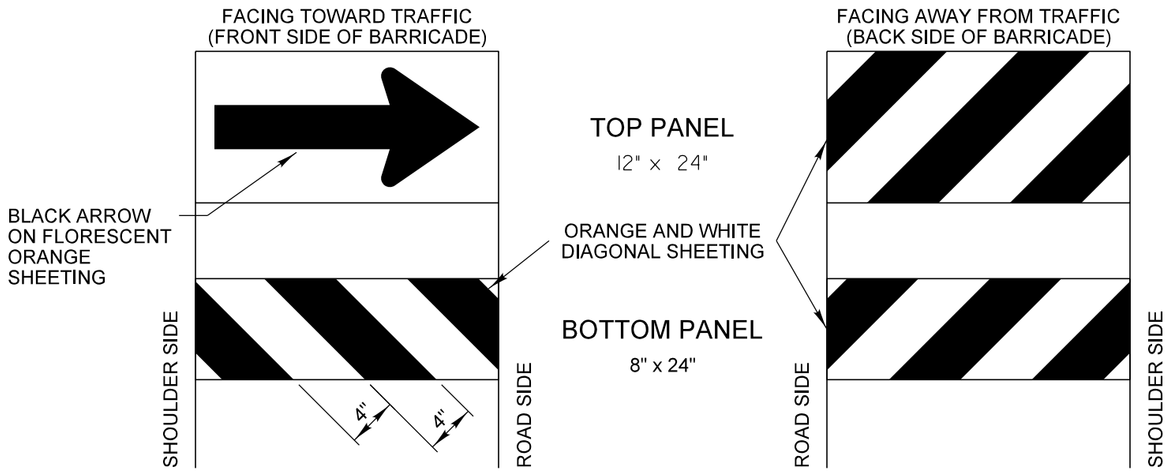

GENERAL NOTES

1) Direction Indicator Barricades shall be constructed from non-metallic Type II barricades meeting the requirements of Article 1106.02 of the Standard Specifications, except where modified by this detail.
2) The Direction Indicator Barricades shall be equipped with Type C steady burning lights if used to channelize traffic during the hours of darkness.
3) The reflective sheeting for the top panel shall be Type AZ fluorescent orange. The diagonal panels shall have orange and white Type A or better reflective sheeting.

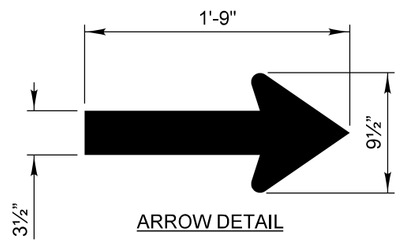

ARROW DETAIL

REVISIONS	DATE
Text Update	7/15/11

LakeCounty Division of Transportation

APPROVED BY: ANTHONY KHAWAJA
DATE: APRIL 1, 2007

TYPICAL APPLICATION OF TRAFFIC CONTROL DEVICES
HIGHWAY CONSTRUCTION, CONTRACT MAINTENANCE

DIRECTION INDICATOR BARRICADES

LC7200

NO.	REVISIONS / REMARKS DESCRIPTION	DATE	BY
		/ /	
		/ /	

SURVEYOR: /
DSGNR/LIAISON: /
PLOTTED BY: khd8659 3/9/2016

LakeCounty Division of Transportation

2016 PASSAGE NETWORK TRAFFIC COUNTERS

LAKE COUNTY STANDARD DETAILS

ROUTE	SECTION	SECTION NUMBER	SHEET	SHEETS
VAR	VAR	16-00999-22-TL	13	38

FILE NAME: U:\DOT\Traffic\2016 Traffic Counter Installation\Plans\Traffic Counters.dgn

ABV	ABOVE
A/C	ACCESS CONTROL
AC	ACRE
ADJ	ADJUST
AS	AERIAL SURVEYS
AGG	AGGREGATE
AH	AHEAD
APT	APARTMENT
ASPH	ASPHALT
AUX	AUXILIARY
AGS	AUXILIARY GAS VALVE (SERVICE)
AVE	AVENUE
AX	AXIS OF ROTATION
BK	BACK
B-B	BACK TO BACK
BKPL	BACKPLATE
B	BARN
BARR	BARRICADE
BGN	BEGIN
BM	BENCHMARK
BIND	BINDER
BIT	BITUMINOUS
BTM	BOTTOM
BLVD	BOULEVARD
BRK	BRICK
BBOX	BUFFALO BOX
BLDG	BUILDING
CIP	CAST IRON PIPE
CB	CATCH BASIN
C-C	CENTER TO CENTER
CL	CENTERLINE OR CLEARANCE
CL-E	CENTERLINE TO EDGE
CL-F	CENTERLINE TO FACE
CTS	CENTERS
CERT	CERTIFIED
CHSLD	CHISELED
CS	CITY STREET
CP	CLAY PIPE
CLSD	CLOSED
CLID	CLOSED LID
CT	COAT OR COURT
COMB	COMBINATION
C	COMMERCIAL BUILDING
CE	COMMERCIAL ENTRANCE
CONC	CONCRETE
CONST	CONSTRUCT
CONTD	CONTINUED
CONT	CONTINUOUS
COR	CORNER
CORR	CORRUGATED
CMP	CORRUGATED METAL PIPE
CNTY	COUNTY
CH	COUNTY HIGHWAY
CSE	COURSE
XSECT	CROSS SECTION
m^3	CUBIC METER
mm^3	CUBIC MILLIMETER
CU YD	CUBIC YARD
CULV	CULVERT
C&G	CURB & GUTTER
D	DEGREE OF CURVE
DC	DEPRESSED CURVE
DET	DETECTOR
DIA	DIAMETER
DIST	DISTRICT
DOM	DOMESTIC
DBL	DOUBLE
DSEL	DOWNSTREAM ELEVATION
DSFL	DOWNSTREAM FLOWLINE
DR	DRAINAGE OR DRIVE
DI	DRAINAGE INLET OR DROP INLET
DRV	DRIVEWAY
DCT	DUCT
EA	EACH
EB	EASTBOUND
EOP	EDGE OF PAVEMENT
E-CL	EDGE TO CENTERLINE
E-E	EDGE TO EDGE
EL	ELEVATION
ENTR	ENTRANCE
EXC	EXCAVATION
EX	EXISTING
EXPWAY	EXPRESSWAY
E	EXTERNAL DISTANCE OF HORIZONTAL CURVE
E	OFFSET DISTANCE TO VERTICAL CURVE
F-F	FACE TO FACE
FA	FEDERAL AID
FAI	FEDERAL AID INTERSTATE
FAP	FEDERAL AID PRIMARY
FAS	FEDERAL AID SECONDARY
FAUS	FEDERAL AID URBAN SECONDARY
FP	FENCE POST
FE	FIELD ENTRANCE
FH	FIRE HYDRANT
FL	FLOW LINE
FB	FOOT BRIDGE
FDN	FOUNDATION
FR	FRAME
F&G	FRAME & GRATE
FRWAY	FREEWAY
GAL	GALLON
GALV	GALVANIZED
G	GARAGE
GM	GAS METER
GV	GAS VALVE
GRAN	GRANULAR
GR	GRATE
GRVL	GRAVEL
GND	GROUND
GUT	GUTTER
GP	GUY POLE
GW	GUY WIRE
HH	HANDHOLE
HATCH	HATCHING
HD	HEAD
HDW	HEADWALL
HDUTY	HEAVY DUTY
ha	HECTARE
HMA	HOT MIX ASPHALT
HWY	HIGHWAY
HORIZ	HORIZONTAL
HSE	HOUSE
IL	ILLINOIS
IMP	IMPROVEMENT
IN DIA	INCH DIAMETER
INL	INLET
INST	INSTALLATION
IDS	INTERSECTION DESIGN STUDY
INV	INVERT
IP	IRON PIPE
IR	IRON ROD
JT	JOINT
kg	KILOGRAM
km	KILOMETER
LS	LANDSCAPING
LN	LANE
LT	LEFT
LP	LIGHT POLE
LGT	LIGHTING
LF	LINEAL FEET OR LINEAR FEET
L	LITER OR CURVE LENGTH
LC	LONG CHORD
LNG	LONGITUDINAL
L SUM	LUMP SUM
MACH	MACHINE
MB	MAIL BOX
MH	MANHOLE
MATL	MATERIAL
MED	MEDIAN
m	METER
METH	METHOD
M	MID-ORDINATE
mm	MILLIMETER
mm DIA	MILLIMETER DIAMETER
MIX	MIXTURE
MBH	MOBILE HOME
MOD	MODIFIED
MFT	MOTOR FUEL TAX
N & BC	NAIL & BOTTLE CAP
N & C	NAIL & CAP
N & W	NAIL & WASHER
NOAA	NATIONAL OCEANIC ATMOSPHERIC ADMINISTRATION
NC	NORMAL CROWN
NB	NORTHBOUND
NE	NORTHEAST
NW	NORTHWEST
OLID	OPEN LID
PAT	PATTERN
PVD	PAVED
PVMT	PAVEMENT
PM	PAVEMENT MARKING
PED	PEDESTAL
PNT	POINT
PC	POINT OF CURVATURE
PI	POINT OF INTERSECTION OF HORIZONTAL CURVE
PRC	POINT OF REVERSE CURVE
PT	POINT OF TANGENCY
POT	POINT ON TANGENT
POLYETH	POLYETHYLENE
PCC	PORTLAND CEMENT CONCRETE
PP	POWER POLE OR PRINCIPAL POINT
PRM	PRIME
PE	PRIVATE ENTRANCE
PROF	PROFILE
PGL	PROFILE GRADELINE
PROJ	PROJECT
P.C.	PROPERTY CORNER
PL	PROPERTY LINE
PR	PROPOSED
R	RADIUS
RR	RAILROAD
RRS	RAILROAD SPIKE
RPS	REFERENCE POINT STAKE
REF	REFLECTIVE
RCCP	REINFORCED CONCRETE CULVERT PIPE
REINF	REINFORCEMENT
REM	REMOVAL
RC	REMOVE CROWN
REP	REPLACEMENT
REST	RESTAURANT
RESURF	RESURFACING
RET	RETAINING
RT	RIGHT
ROW	RIGHT-OF-WAY
RD	ROAD
RDWY	ROADWAY
RTE	ROUTE
SAN	SANITARY
SANS	SANITARY SEWER
SEC	SECTION
SEED	SEEDING
SHAP	SHAPING
S	SHED
SH	SHEET
SHLD	SHOULDER
SW	SIDEWALK OR SOUTHWEST
SIG	SIGNAL
SOD	SODDING
SM	SOLID MEDIAN
SB	SOUTHBOUND
SE	SOUTHEAST
SPL	SPECIAL
SD	SPECIAL DITCH
SQ FT	SQUARE FEET
m^2	SQUARE METER
mm^2	SQUARE MILLIMETER
SQ YD	SQUARE YARD
STB	STABILIZED
STD	STANDARD
SBI	STATE BOND ISSUE
SR	STATE ROUTE
STA	STATION
SPBGR	STEEL PLATE BEAM GUARDRAIL
SS	STORM SEWER
STY	STORY
ST	STREET
STR	STRUCTURE
e	SUPERELEVATION RATE
S.E. RUN.	SUPERELEVATION RUNOFF LENGTH
SURF	SURFACE
SMK	SURVEY MARKER
T	TANGENT DISTANCE
T.R.	TANGENT RUNOUT DISTANCE
TEL	TELEPHONE
TB	TELEPHONE BOX
TP	TELEPHONE POLE
TEMP	TEMPORARY
TBM	TEMPORARY BENCH MARK
TD	TILE DRAIN
TBE	TO BE EXTENDED
TBR	TO BE REMOVED
TBS	TO BE SAVED
TWP	TOWNSHIP
TR	TOWNSHIP ROAD
TS	TRAFFIC SIGNAL
TSCB	TRAFFIC SIGNAL CONTROL BOX
TSC	TRAFFIC SYSTEMS CENTER
TRVS	TRANSVERSE
TRVL	TRAVEL
TRN	TURN
TY	TYPE
T-A	TYPE A
TYP	TYPICAL
UNDGND	UNDERGROUND
USGS	U.S. GEOLOGICAL SURVEY
USEL	UPSTREAM ELEVATION
USFL	UPSTREAM FLOWLINE
UTIL	UTILITY
VBOX	VALVE BOX
VV	VALVE VAULT
VLT	VAULT
VEH	VEHICLE
VP	VENT PIPE
VERT	VERTICAL
VC	VERTICAL CURVE
VPC	VERTICAL POINT OF CURVATURE
VPI	VERTICAL POINT OF INTERSECTION
VPT	VERTICAL POINT OF TANGENCY
WM	WATER METER
WV	WATER VALVE
WMAIN	WATER MAIN
WB	WESTBOUND
WILDFL	WILDFLOWERS
W	WITH
WO	WITHOUT

Illinois Department of Transportation

PASSED January 1, 2011
Michael Brand
ENGINEER OF POLICY AND PROCEDURES
APPROVED January 1, 2011
ENGINEER OF DESIGN AND ENVIRONMENT

ISSUED 1-1-97

DATE	REVISIONS
1-1-11	Updated abbreviations
	and symbols.
1-1-08	Updated abbreviations
	and symbols.

STANDARD SYMBOLS, ABBREVIATIONS AND PATTERNS

(Sheet 1 of 8)

STANDARD 000001–06

ADJUSTMENT ITEMS

	EX	PR
Structure To Be Adjusted		ADJ
Structure To Be Cleaned		C
Main Structure To Be Filled		FM
Structure To Be Filled		F
Structure To Be Filled Special		FSP
Structure To Be Removed		R
Structure To Be Reconstructed		REC
Structure To Be Reconstructed Special		RSP
Frame and Grate To Be Adjusted		A
Frame and Lid To Be Adjusted		A
Domestic Service Box To Be Adjusted		A
Valve Vault To Be Adjusted		A
Special Adjustment		SP
Item To Be Abandoned		AB
Item To Be Moved		M
Item To Be Relocated		REL
Pavement Removal and Replacement		

ALIGNMENT ITEMS

	EX	PR
Baseline		
Centerline		
Centerline Break Circle		
Baseline Symbol		
Centerline Symbol		
PI Indicator		
Point Indicator		
Horizontal Curve Data (Half Size)	CURVE P.I. STA= Δ= D= R= T= L= E= e= T.R.= S.E. RUN= P.C. STA= P.T. STA=	CURVE P.I. STA= Δ= D= R= T= L= E= e= T.R.= S.E. RUN= P.C. STA= P.T. STA=

BOUNDARIES ITEMS

	EX	PR
Dashed Property Line		
Solid Property/Lot Line		
Section/Grant Line		
Quarter Section Line		
Quarter/Quarter Section Line		
County/Township Line		
State Line		
Iron Pipe Found		
Iron Pipe Set		
Survey Marker		
Property Line Symbol		
Same Ownership Symbol (Half Size)		
Northwest Quarter Corner (Half Size)		
Section Corner (Half Size)		
Southeast Quarter Corner (Half Size)		

CONTOUR ITEMS

	EX	PR
Approx. Index Line		
Approx. Intermediate Line		
Index Contour		
Intermediate Contour		

DRAINAGE ITEMS

	EX	PR
Channel or Stream Line		
Culvert Line		
Grading & Shaping Ditches		
Drainage Boundary Line		
Paved Ditch		
Aggregate Ditch		
Pipe Underdrain		
Storm Sewer		
Flowline		
Ditch Check		
Headwall		
Inlet		
Manhole		
Summit		
Roadway Ditch Flow		
Swale		
Catch Basin		
Culvert End Section		
Water Surface Indicator		
Riprap		

Illinois Department of Transportation

PASSED January 1, 2011
Michael Brand
ENGINEER OF POLICY AND PROCEDURES

APPROVED January 1, 2011
ENGINEER OF DESIGN AND ENVIRONMENT

ISSUED 1-1-97

STANDARD SYMBOLS, ABBREVIATIONS AND PATTERNS

(Sheet 2 of 8)

STANDARD 000001–06

EROSION & SEDIMENT CONTROL ITEMS

	EX	PR
Cleaning & Grading Limits		
Dike		
Erosion Control Fence		
Perimeter Erosion Barrier		
Temporary Fence		
Ditch Check Temporary		
Ditch Check Permanent		
Inlet & Pipe Protection		
Sediment Basin		
Erosion Control Blanket		
Fabric Formed Concrete Revetment Mat		
Turf Reinforcement Mat		
Mulch Temporary		
Mulch Method 1		
Mulch Method 2 Stabilized		
Mulch Method 3 Hydraulic		

NON–HIGHWAY IMPROVEMENT ITEMS

	EX	PR
Noise Attn./Levee		
Field Line		
Fence		
Base of Levee		
Mailbox		
Multiple Mailboxes		
Pay Telephone		
Advertising Sign		

LANDSCAPING ITEMS

	EX	PR
Contour Mounding Line		
Fence		
Fence Post		
Shrubs		
Mowline		
Perennial Plants		
Seeding Class 2		
Seeding Class 2A		
Seeding Class 4		
Seeding Class 4 & 5 Combined		

EXISTING LANDSCAPING ITEMS (contd.)

	EX	PR
Seeding Class 5		
Seeding Class 7		
Seedlings Type 1		
Seedlings Type 2		
Sodding		
Mowstake w/Sign		
Tree Trunk Protection		
Evergreen Tree	E	
Shade Tree	E	+

LIGHTING

	EX	PR
Duct		
Conduit		
Electrical Aerial Cable	A	A
Electrical Buried Cable	L	L
Controller		
Underpass Luminaire		
Power Pole		

Illinois Department of Transportation

PASSED January 1, 2011
Michael Brand
ENGINEER OF POLICY AND PROCEDURES
APPROVED January 1, 2011
ENGINEER OF DESIGN AND ENVIRONMENT

ISSUED 1-1-97

STANDARD SYMBOLS, ABBREVIATIONS AND PATTERNS

(Sheet 3 of 8)

STANDARD 000001–06

LIGHTING (contd.)

	EX	PR
Pull Point	Ⓟ	Ⓟ
Handhole		
Heavy Duty Handhole	H	H
Junction Box		
Light Unit Comb.		
Electrical Ground		
Traffic Flow Arrow		
High Mast Pole (Half Size)		
Light Unit-1		

PAVEMENT (MISC.)

	EX	PR
Keyed Long. Joint		
Keyed Long. Joint w/Tie Bars		
Sawed Long. Joint w/Tie Bars		
Bituminous Shoulder		
Bituminous Taper		
Stabilized Driveway		
Widening		

PAVEMENT MARKINGS

	EX	PR
Bike Lane Symbol		
Bike Lane Text		BIKE LANE
Handicap Symbol		
RR Crossing		RR
Raised Marker Amber 1 Way		
Raised Marker Amber 2 Way		
Raised Marker Crystal 1 Way		
Two Way Turn Left		
Shoulder Diag. Pattern		
Skip-Dash White		
Skip-Dash Yellow		
Stop Line		
Solid Line		
Double Centerline		
Dotted Lines		
CL 2Ln 2Way RRPM 12.2 m (40') o.c.		
CL 2Ln 2Way RRPM 80' (24.4 m) o.c.		
CL Multilane Div. RRPM 40' (12.2 m) o.c.		
CL Multilane Div. RRPM 80' (24.4 m) o.c.		
CL Multilane Div. Dbl. RRPM 80' (24.4 m) o.c.		
CL Multilane Undiv.		
Two Way Turn Left Line		

Illinois Department of Transportation

PASSED January 1, 2011
Michael Brand
ENGINEER OF POLICY AND PROCEDURES

APPROVED January 1, 2011
Scott E. Stokes
ENGINEER OF DESIGN AND ENVIRONMENT

ISSUED 1-1-97

STANDARD SYMBOLS, ABBREVIATIONS AND PATTERNS

(Sheet 4 of 8)

STANDARD 000001–06

PAVEMENT MARKINGS (contd.)

	EX	PR
Urban Combination Left		
Urban Combination Right		
Urban Left Turn Arrow		
Urban Right Turn Arrow		
Urban Left Turn Only		
Urban Right Turn Only		
Urban Thru Only		
Urban U-Turn		
Urban Combined U-Turn		
Rural Combination Left		
Rural Combination Right		
Rural Left Turn Arrow		
Rural Right Turn Arrow		
Rural Left Turn Only		
Rural Right Turn Only		
Rural Thru Only		

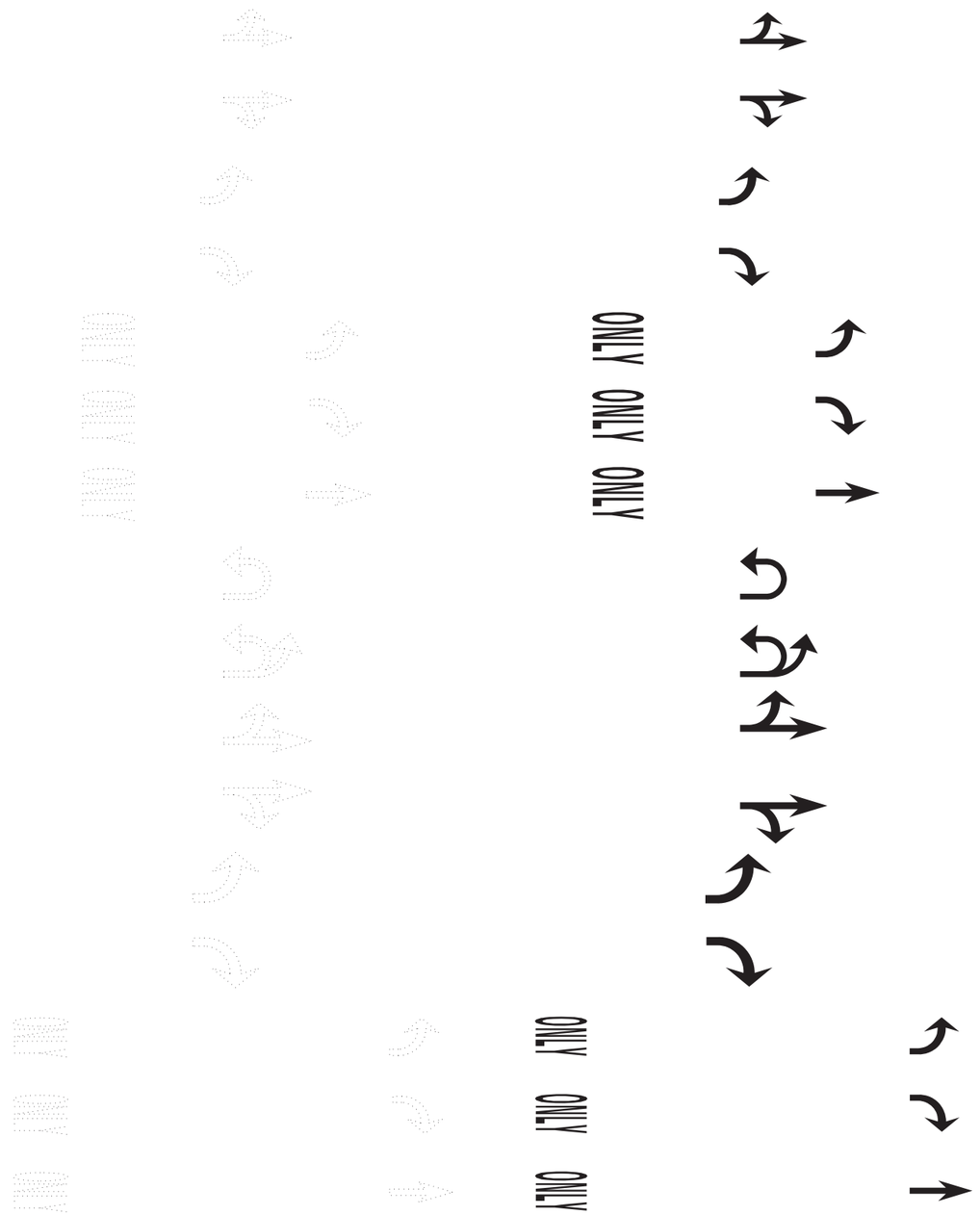

RAILROAD ITEMS	EX	PR
Abandoned Railroad		
Railroad		
Railroad Point		
Control Box		
Crossing Gate		
Flashing Signal		
Railroad Cant. Mast Arm		
Crossbuck		

REMOVAL ITEMS	EX	PR
Removal Tic		
Bituminous Removal		
Hatch Pattern		
Tree Removal Single		

RIGHT OF WAY ITEMS	EX	PR
Future ROW Corner Monument		
ROW Marker		
ROW Line		
Easement		
Temporary Easement		

Illinois Department of Transportation

PASSED January 1, 2011
Michael Brand
ENGINEER OF POLICY AND PROCEDURES
APPROVED January 1, 2011
Scott E. Stokes
ENGINEER OF DESIGN AND ENVIRONMENT

ISSUED 1-1-97

STANDARD SYMBOLS, ABBREVIATIONS AND PATTERNS

(Sheet 5 of 8)

STANDARD 000001–06

RIGHT OF WAY ITEMS (contd.)

	EX	PR
Access Control Line	AC	AC
Access Control Line & ROW	AC	AC
Access Control Line & ROW with Fence	AR	AC
Excess ROW Line		XS

ROADWAY PLAN ITEMS

	EX	PR
Cable Barrier		
Concrete Barrier		
Edge of Pavement		
Bit Shoulders, Medians and C&G Line		
Aggregate Shoulder		
Sidewalks, Driveways		
Guardrail		
Guardrail Post		
Traffic Sign		
Corrugated Median		
Impact Attenuator		
North Arrow with District Office (Half Size)	N	
Match Line		STA. 45+00
Slope Limit Line		
Typical Cross-Section Line		

ROADWAY PROFILES

	EX	PR
P.I. Indicator		
Point Indicator		
Earthworks Balance Point		
Begin Point		
Vert. Curve Data	VPI = ELEV= L = E =	VPI = ELEV= L = E =
Ditch Profile Left Side		
Ditch Profile Right Side		
Roadway Profile Line		
Storm Sewer Profile Left Side		
Storm Sewer Profile Right Side		

SIGNING ITEMS

	EX	PR
Cone, Drum or Barricade		
Barricade Type II		
Barricade Type III		
Barricade With Edge Line		
Flashing Light Sign		
Panels I		
Panels II		
Direction of Traffic		
Sign Flag (Half Size)		

SIGNING ITEMS (contd.)

	EX	PR
Reverse Left W1-4L (Half Size)		
Reverse Right W1-4R (Half Size)		
Two Way Traffic Sign W6-3 (Half Size)		
Detour Ahead W20-2(0) (Half Size)		DETOUR AHEAD
Left Lane Closed Ahead W20-5L(0) (Half Size)		LEFT LANE CLOSED AHEAD
Right Lane Closed Ahead W20-5R(0) (Half Size)		RIGHT LANE CLOSED AHEAD
Road Closed Ahead W20-3(0) (Half Size)		ROAD CLOSED AHEAD
Road Construction Ahead W20-1-(0) (Half Size)		ROAD CONSTRUCTION AHEAD
Single Lane Ahead (Half Size)		SINGLE LANE AHEAD
Transition Left W4-2L (Half Size)		
Transition Right W4-2R (Half Size)		

Illinois Department of Transportation

PASSED January 1, 2011
Michael Brand
ENGINEER OF POLICY AND PROCEDURES

APPROVED January 1, 2011
ENGINEER OF DESIGN AND ENVIRONMENT

ISSUED 1-1-97

STANDARD SYMBOLS, ABBREVIATIONS AND PATTERNS

(Sheet 6 of 8)

STANDARD 000001–06

SIGNING ITEMS (contd.)

	EX	PR
One Way Arrow Lrg. W1-6-(0) (Half Size)		
Two Way Arrow Large W1-7-(0) (Half Size)		
Detour M4-10L-(0) (Half Size)		DETOUR
Detour M4-10R-(0) (Half Size)		DETOUR
One Way Left R6-1L (Half Size)		ONE WAY
One Way Right R6-1R (Half Size)		ONE WAY
Left Turn Lane R3-I100L (Half Size)		LEFT TURN LANE
Keep Left R4-7AL (Half Size)		KEEP LEFT
Keep Left R4-7BL (Half Size)		KEEP LEFT
Keep Right R4-7AR (Half Size)		KEEP RIGHT
Keep Right R4-7BR (Half Size)		KEEP RIGHT
Stop Here On Red R10-6-AL (Half Size)		STOP HERE ON RED
Stop Here On Red R10-6-AR (Half Size)		STOP HERE ON RED
No Left Turn R3-2 (Half Size)		
No Right Turn R3-1 (Half Size)		
Road Closed R11-2 (Half Size)		ROAD CLOSED
Road Closed Thru Traffic R11-2 (Half Size)		ROAD CLOSED TO THRU TRAFFIC

STRUCTURES ITEMS

	EX	PR
Box Culvert Barrel		
Box Culvert Headwall		
Bridge Pier		
Bridge		
Retaining Wall		
Temporary Sheet Piling		

TRAFFIC SHEET ITEMS

	EX	PR
Cable Number		
Left Turn Green	G	G
Left Turn Yellow	Y	Y
Signal Backplate		
Signal Section 8" (200 mm)		
Signal Section 12" (300 mm)		
Walk/Don't Walk Letters	DW W	DW W
Walk/Don't Walk Symbols		

TRAFFIC SIGNAL ITEMS

	EX	PR
Galv. Steel Conduit		
Underground Cable		
Detector Loop Line		
Detector Loop Large		
Detector Loop Small		
Detector Loop Quadrapole		

Illinois Department of Transportation

PASSED January 1, 2011

Michael Brand

ENGINEER OF POLICY AND PROCEDURES

APPROVED January 1, 2011

ENGINEER OF DESIGN AND ENVIRONMENT

ISSUED 1-1-97

STANDARD SYMBOLS, ABBREVIATIONS AND PATTERNS

(Sheet 7 of 8)

STANDARD 000001–06

TRAFFIC SIGNAL ITEMS (contd.)

	EX	PR
Detector Raceway	"E"	
Aluminum Mast Arm		
Steel Mast Arm		
Veh. Detector Magnetic		
Conduit Splice		
Controller		
Gulfbox Junction		
Wood Pole		
Temp. Signal Head		
Handhole		
Double Handhole		
Heavy Duty Handhole		
Junction Box		
Ped. Pushbutton Detector		
Ped. Signal Head		
Power Pole Service		
Priority Veh. Detector		
Signal Head		
Signal Head w/Backplate		
Signal Post		
Closed Circuit TV		
Video Detector System		

UNDERGROUND UTILITY ITEMS

	EX	PR	ABANDONED
Cable TV	CTV	CTV	CTV
Electric Cable	E	E	E
Fiber Optic	FO	FO	FO
Gas Pipe	G	G	G
Oil Pipe	O	O	O
Sanitary Sewer			
Telephone Cable	T	T	T
Water Pipe	W	W	W

UTILITIES ITEMS

	EX	PR
Controller		
Double Handhole		
Fire Hydrant		
GuyWire or Deadman Anchor		
Handhole		
Heavy Duty Handhole		
Junction Box		
Light Pole		
Manhole		
Pipeline Warning Sign		
Power Pole		
Power Pole with Light		
Sanitary Sewer Cleanout		
Splice Box Above Ground		
Telephone Splice Box Above Ground		
Telephone Pole		

UTILITY ITEMS (contd.)

	EX	PR
Traffic Signal		
Traffic Signal Control Box	TS	
Water Meter		
Water Meter Valve Box		
Profile Line		
Aerial Power Line	A A	A A

VEGETATION ITEMS

	EX	PR
Deciduous Tree		
Bush or Shrub		
Evergreen Tree		
Stump		
Orchard/Nursery Line		
Vegetation Line		
Woods & Bush Line		

WATER FEATURE ITEMS

	EX	PR
Stream or Drainage Ditch		
Waters Edge		
Water Surface Indicator		
Water Point		
Disappearing Ditch		
Marsh		
Marsh/Swamp Boundary		

Illinois Department of Transportation

PASSED January 1, 2011
Michael Brand
ENGINEER OF POLICY AND PROCEDURES

APPROVED January 1, 2011
ENGINEER OF DESIGN AND ENVIRONMENT

ISSUED 1-1-97

STANDARD SYMBOLS, ABBREVIATIONS AND PATTERNS

(Sheet 8 of 8)

STANDARD 000001–06

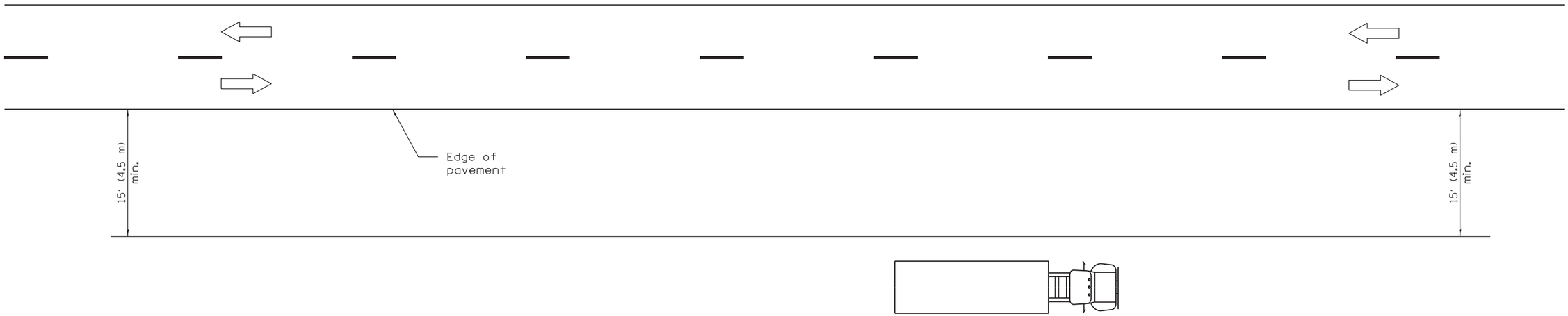

TYPICAL APPLICATIONS

Landscaping work

Utility work

Fencing contracts and maintenance

Cleaning culverts

GENERAL NOTES

This Standard is used where at all times all vehicles, equipment, workers or their activities are more than 15′ (4.5 m) from the edge of pavement.

When the work operation requires that two or more work vehicles cross the 15′ (4.5 m) clear zone in any one hour, traffic control shall be according to Standard 701006.

All dimensions are in inches (millimeters) unless otherwise shown.

Illinois Department of Transportation

APPROVED January 1, 2009
ENGINEER OF OPERATIONS

APPROVED January 1, 2009
ENGINEER OF DESIGN AND ENVIRONMENT

ISSUED 1-1-97

DATE	REVISIONS
1-1-09	Switched units to
	English (metric).
1-1-05	Revised title and notes.

OFF–RD OPERATIONS, 2L, 2W, MORE THAN 15′ (4.5 m) AWAY

STANDARD 701001–02

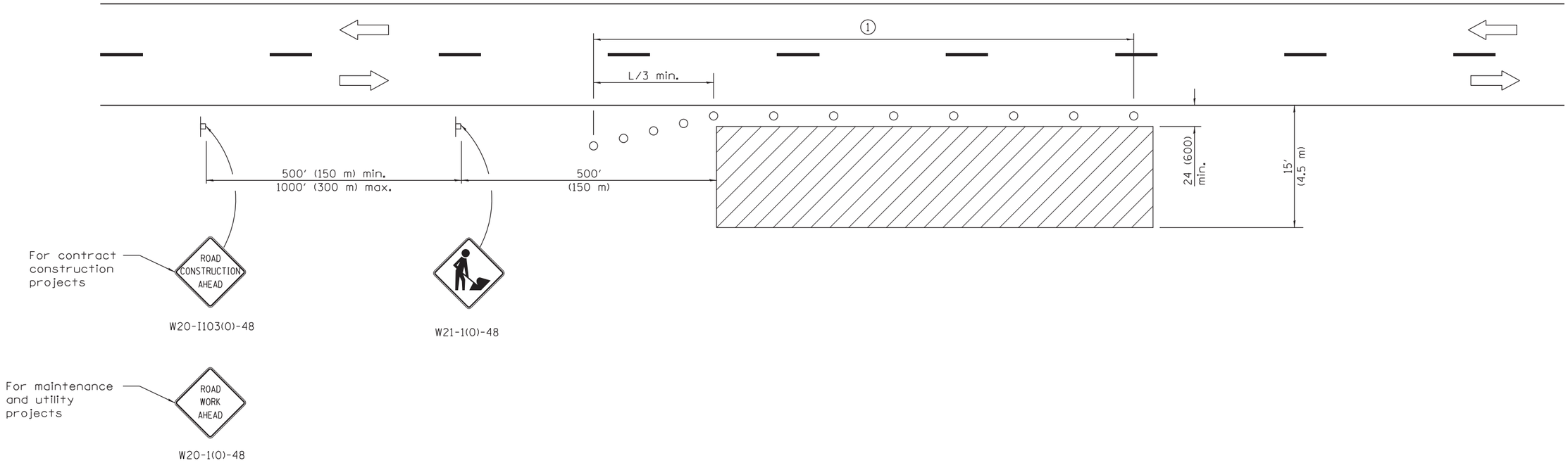

TYPICAL APPLICATIONS

Utility operations
Culvert extensions
Side slope changes
Guardrail installation and maintenance
Delineator installation
Landscaping operations
Shoulder repair
Sign installation and maintenance

SYMBOLS

Work area

Sign

Cone, drum or barricade

① When the work operation exceeds one hour, cones, drums or barricades shall be placed at 25′ (8 m) centers for L/3 distance, and at 50′ (15 m) centers through the remainder of the work area.

GENERAL NOTES

This Standard is used where any vehicles, equipment, workers or their activities will encroach in the area 15′ (4.5 m) to 24 (600) from the edge of pavement.

Calculate L as follows:

SPEED LIMIT	FORMULAS English	FORMULAS (Metric)
40 mph (70 km/h) or less:	$L = \frac{WS^2}{60}$	$L = \frac{WS^2}{150}$
45 mph (80 km/h) or greater:	L=(W)(S)	L=0.65(W)(S)

W = Width of offset in feet (meters).

S = Normal posted speed mph (km/h).

All dimensions are in inches (millimeters) unless otherwise shown.

Illinois Department of Transportation

APPROVED January 1, 2014
ENGINEER OF SAFETY ENGINEERING

APPROVED January 1, 2014
ENGINEER OF DESIGN AND ENVIRONMENT

ISSUED 1-1-97

DATE	REVISIONS
1-1-14	Revised workers sign
	number to agree with
	current MUTCD.
1-1-13	Omitted text 'WORKERS'
	sign.

OFF–RD OPERATIONS, 2L, 2W, 15′ (4.5 m) TO 24″ (600 mm) FROM PAVEMENT EDGE

STANDARD 701006–05

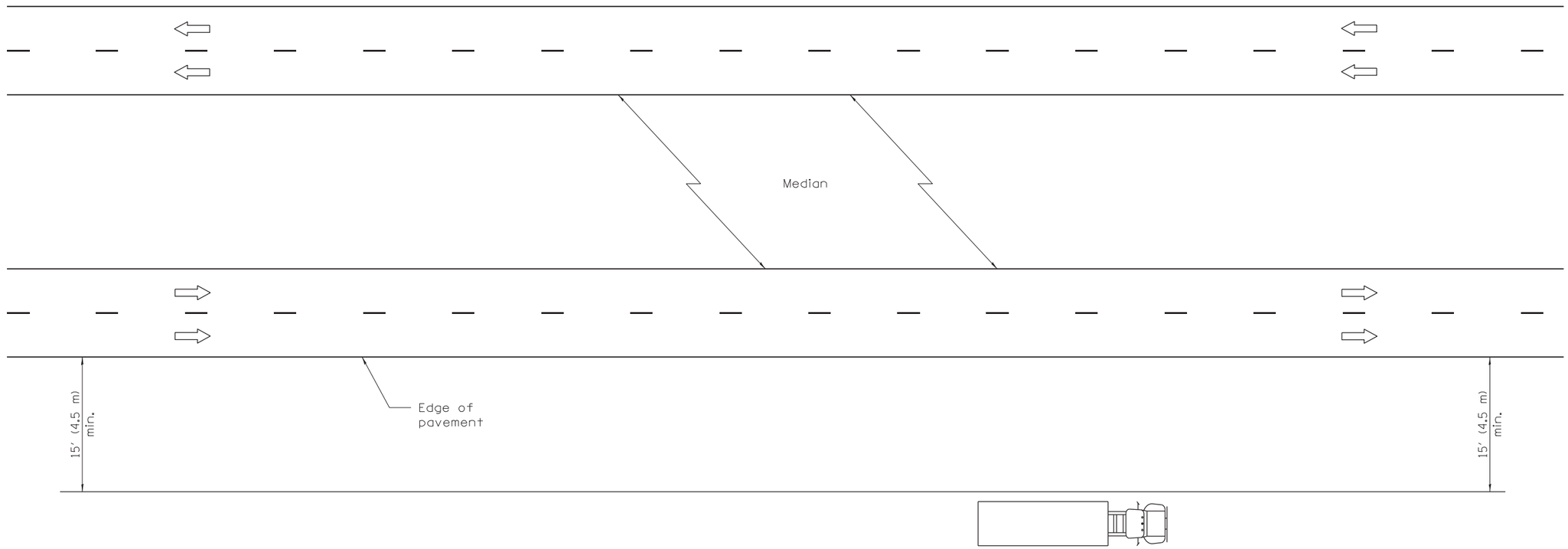

TYPICAL APPLICATIONS

Landscaping work
Utility work
Fencing contracts

GENERAL NOTES

This Standard is used where at all times all vehicles, equipment, workers or their activities are more than 15' (4.5 m) from the edge of pavement.

When the work operation requires that two or more work vehicles cross the 15' (4.5 m) clear zone in any one hour, traffic control shall be according to Standard 701101.

This Standard also applies to work performed in the median more than 15' (4.5 m) from either pavement.

All dimensions are in inches (millimeters) unless otherwise shown.

Illinois Department of Transportation

APPROVED January 1, 2009
ENGINEER OF OPERATIONS

APPROVED January 1, 2009
ENGINEER OF DESIGN AND ENVIRONMENT

ISSUED 1-1-97

DATE	REVISIONS
1-1-05	Switched units to
	English (metric).
1-1-05	Revised title.

OFF–RD OPERATIONS, MULTILANE, MORE THAN 15' (4.5 m) AWAY

STANDARD 701106–02

① Cones at 25′ (8 m) centers for 250′ (75 m). Additional cones may be placed at 50′ (15 m) centers. When drums or barricades are used, the interval between devices may be doubled.

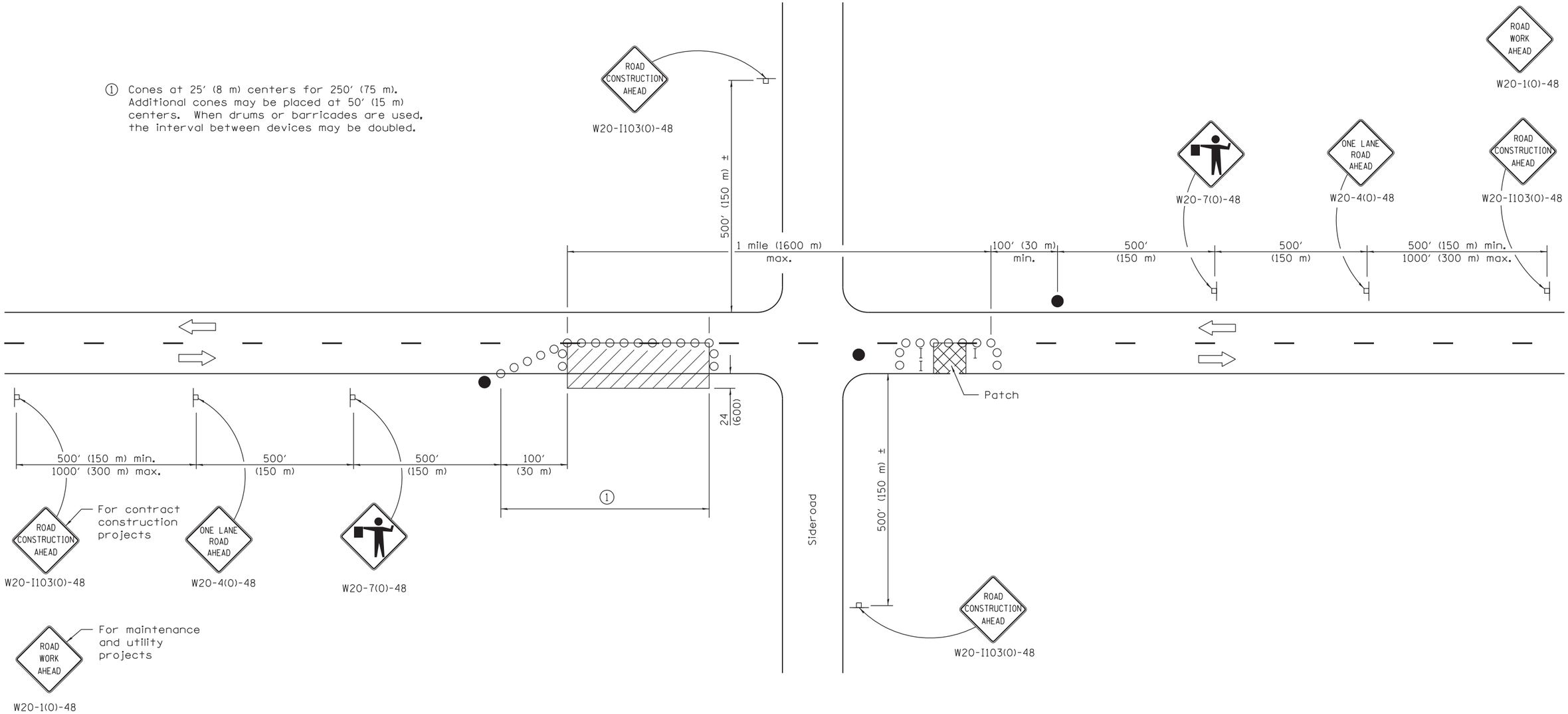

SYMBOLS

- Work area
- Sign
- Barricade or drum
- Cone, drum or barricade
- Flagger with traffic control sign

TYPICAL APPLICATIONS

Isolated patching
Utility operations
Storm sewer
Culverts
Cable placement

GENERAL NOTES

This Standard is used where at any time, any vehicles, equipment, workers or their activities will encroach in the area between the center line and a line 24 (600) outside the edge of pavement for daylight operation.

When the distance between successive work areas exceeds 2000′ (600 m), additional warning signs, flaggers, and taper shall be placed as shown.

All dimensions are in inches (millimeters) unless otherwise shown.

Illinois Department of Transportation

APPROVED January 1, 2011
ENGINEER OF SAFETY ENGINEERING

APPROVED January 1, 2011
ENGINEER OF DESIGN AND ENVIRONMENT

ISSUED 1-1-97

DATE	REVISIONS
1-1-11	Revised flagger sign.
1-1-09	Switched units to
	English (metric).
	Corrected sign No.'s.

LANE CLOSURE, 2L, 2W, DAY ONLY, FOR SPEEDS ≥ 45 MPH

STANDARD 701201–04

For any operation that encroaches in the area between the centerline and a line 24 (600) outside the edge of the pavement for a period of less than 15 minutes.

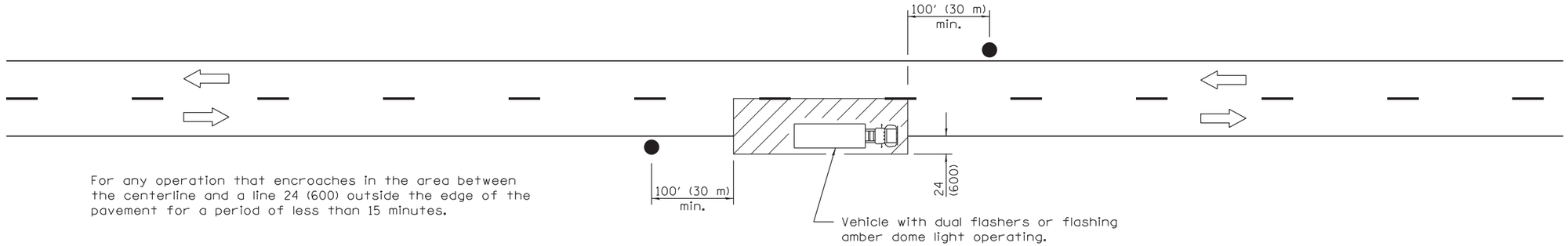

For any operation that is more than 24 (600) outside the edge of the pavement for a period of less than 60 minutes.

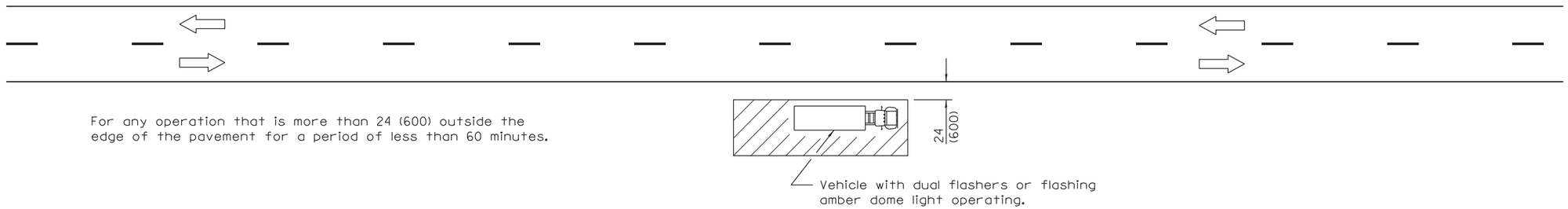

For any operation that encroaches in the area between the centerline and a line 24 (600) outside the edge of the pavement for a period in excess of 15 minutes but less than 60 minutes.

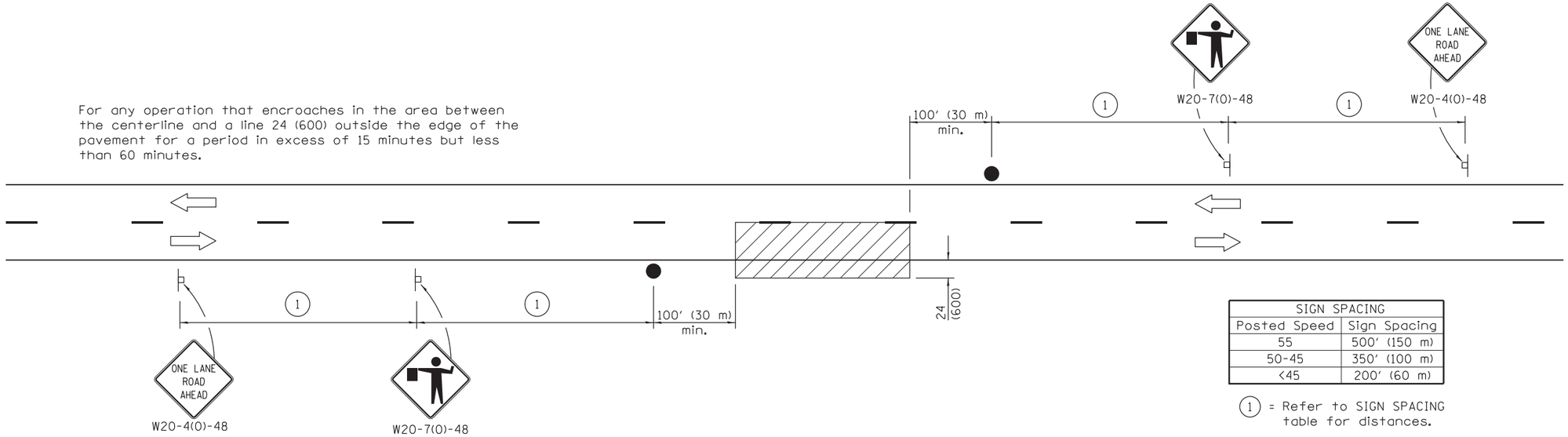

SIGN SPACING	
Posted Speed	Sign Spacing
55	500′ (150 m)
50-45	350′ (100 m)
<45	200′ (60 m)

(1) = Refer to SIGN SPACING table for distances.

All dimensions are in inches (millimeters) unless otherwise shown.

TYPICAL APPLICATIONS

Marking patches
Field survey
String line
Utility operations
Cleaning up debris on pavement

SYMBOLS

Work area

Sign on portable or permanent support

Flagger with traffic control sign

Illinois Department of Transportation

APPROVED January 1, 2011
ENGINEER OF SAFETY ENGINEERING

APPROVED January 1, 2011
ENGINEER OF DESIGN AND ENVIRONMENT

ISSUED 1-1-97

DATE	REVISIONS
1-1-11	Revised flagger sign.
1-1-09	Switched units to
	English (metric).

LANE CLOSURE, 2L, 2W, SHORT TIME OPERATIONS

STANDARD 701301–04

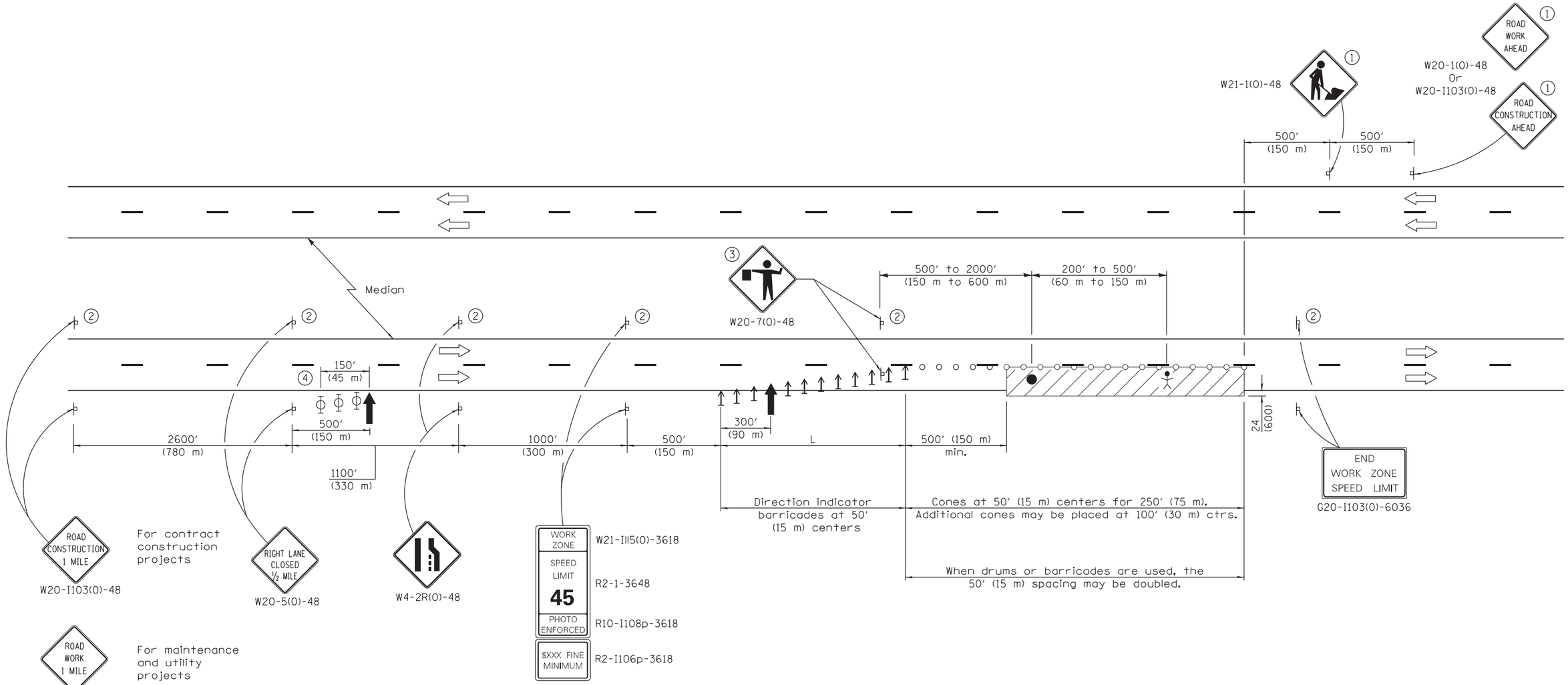

L = lane width X taper ratio	
Normal Posted Speed	Taper Ratio
mph	
55	55/1
45	45/1

TYPICAL APPLICATIONS

Pavement patch
Utility operations
Bituminous resurfacing

SYMBOLS

- Arrow board
- Work area
- Sign
- Direction indicator barricade
- Cone, drum or barricade
- Flagger with traffic control sign
- Worker
- Type II barricade, drum, or vertical barricade with monodirectional flashing light

1. Undivided roadway only with left lane closure in opposite direction.
2. Omitted when median is less than 10′ (3 m).
3. FLAGGER signs shall be moved as necessary to maintain the required spacing between the sign and each separate work activity.
4. Three Type II barricades, drums, or vertical barricades at 50′ (15 m) centers.

GENERAL NOTES

This Standard is used where at any time, any vehicle, equipment, workers or their activities will encroach on the lane adjacent to the shoulder, or on the shoulder within 24 (600) of the edge of pavement.

This Standard also applies when work is being performed in the left lane. Under these conditions, LEFT LANE CLOSED signs shall be substituted for RIGHT LANE CLOSED signs. On undivided highways, signs shall be added in the opposite direction as shown.

All dimensions are in inches (millimeters) unless otherwise shown.

Illinois Department of Transportation

APPROVED January 1, 2015
ENGINEER OF SAFETY ENGINEERING
APPROVED January 1, 2015
ENGINEER OF DESIGN AND ENVIRONMENT

ISSUED 4-1-04

DATE	REVISIONS
1-1-15	Revised END WORK ZONE SPEED
	LIMIT sign dimensions.
1-1-14	Revised workers sign number
	to agree withcurrent MUTCD.
	Rev. PHOTO ENFORCED sign no.

LANE CLOSURE, MULTILANE, DAY OPERATIONS ONLY, FOR SPEEDS ≥ 45 MPH TO 55 MPH

STANDARD 701421–07

SHEET 27 OF 38

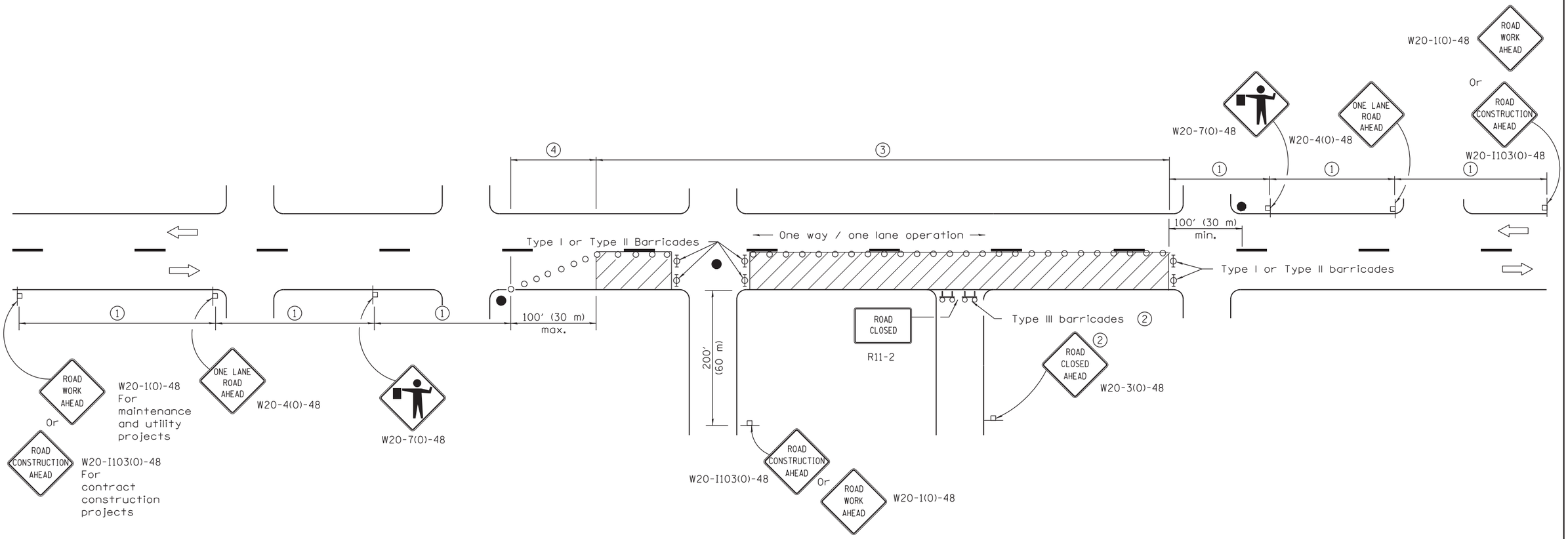

SIGN SPACING	
Posted Speed	Sign Spacing
55	500' (150 m)
50-45	350' (100 m)
<45	200' (60 m)

SYMBOLS

- Work area
- Cone, drum or barricade (not required for moving operations)
- Sign on portable or permanent support
- Flagger with traffic control sign
- Barricade or drum with flashing light
- Type III barricade with flashing lights

1. Refer to SIGN SPACING TABLE for distances.
2. For approved sideroad closures.
3. Cones at 25' (8 m) centers for 250' (75 m). Additional cones may be placed at 50' (15 m) centers. When drums or Type I or Type II barricades are used. the interval between devices may be doubled.
4. Cones, drums or barricades at 20' (6 m) centers.

GENERAL NOTES

This Standard is used where at any time, day or night, any vehicle, equipment, workers or their activities encroach on the pavement requiring the closure of one traffic lane in an urban area.

All dimensions are in inches (millimeters) unless otherwise shown.

Illinois Department of Transportation

APPROVED January 1, 2011
ENGINEER OF SAFETY ENGINEERING
APPROVED January 1, 2011
ENGINEER OF DESIGN AND ENVIRONMENT

ISSUED 1-1-97

DATE	REVISIONS
1-1-11	Revised flagger sign.
1-1-09	Switched units to
	English (metric).
	Corrected sign No.'s.

URBAN LANE CLOSURE, 2L, 2W, UNDIVIDED

STANDARD 701501–06

SHEET 28 OF 38

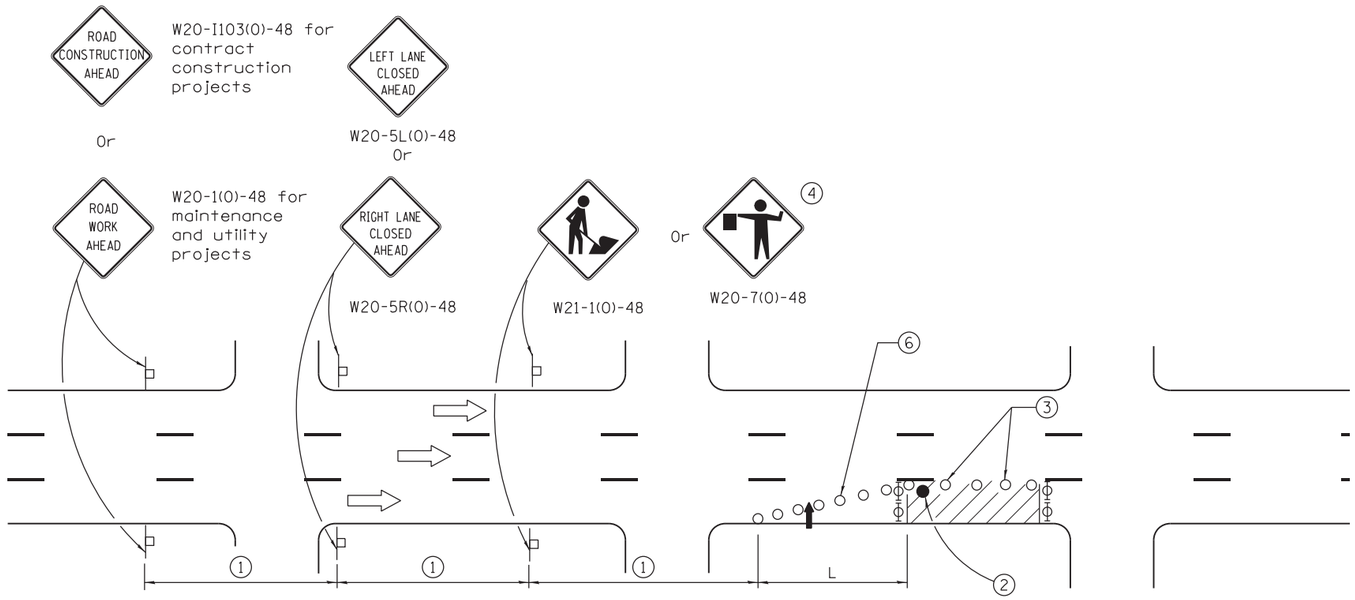

SIGN SPACING	
Posted Speed	Sign Spacing
55	500′ (150 m)
50-45	350′ (100 m)
<45	200′ (60 m)

SYMBOLS

- Arrow board
- Cone, drum or barricade
- Sign on portable or permanent support
- Work area
- Barricade or drum with flashing light
- Type III barricade with flashing lights
- Flagger with traffic control sign.

1. Refer to SIGN SPACING TABLE for distances.
2. Required for speeds > 40 MPH
3. Cones at 25′ (8 m) centers for 250′ (75 m). Additional cones may be placed at 50′ (15 m) centers. When drums or Type I or Type II barricades are used, the interval between devices may be doubled.
4. Use flagger sign only when flagger is present.
5. For approved sideroad closures.
6. Cones, drums or barricades at 20′ (6 m) in taper.

GENERAL NOTES

This Standard is used where at any time, day or night, any vehicle, equipment, workers or their activities encroach on the pavement during shoulder operations or where construction requires lane closures in urban areas.

Calculate L as follows:

SPEED LIMIT	FORMULAS English	FORMULAS (Metric)
40 mph (70 km/h) or less:	$L = \frac{WS^2}{60}$	$L = \frac{WS^2}{150}$
45 mph (80 km/h) or greater:	L=(W)(S)	L=0.65(W)(S)

W = Width of offset in feet (meters).

S = Normal posted speed mph (km/h).

All dimensions are in inches (millimeters) unless otherwise shown.

Illinois Department of Transportation

APPROVED January 1, 2014
ENGINEER OF SAFETY ENGINEERING
APPROVED January 1, 2014
ENGINEER OF DESIGN AND ENVIRONMENT

ISSUED 1-1-97

DATE	REVISIONS
1-1-14	Revised workers sign
	number to agree with
	current MUTCD.
1-1-13	Omitted text 'WORKERS'
	sign.

URBAN LANE CLOSURE, MULTILANE, 1W OR 2W WITH NONTRAVERSABLE MEDIAN

(Sheet 1 of 2)

STANDARD 701601–09

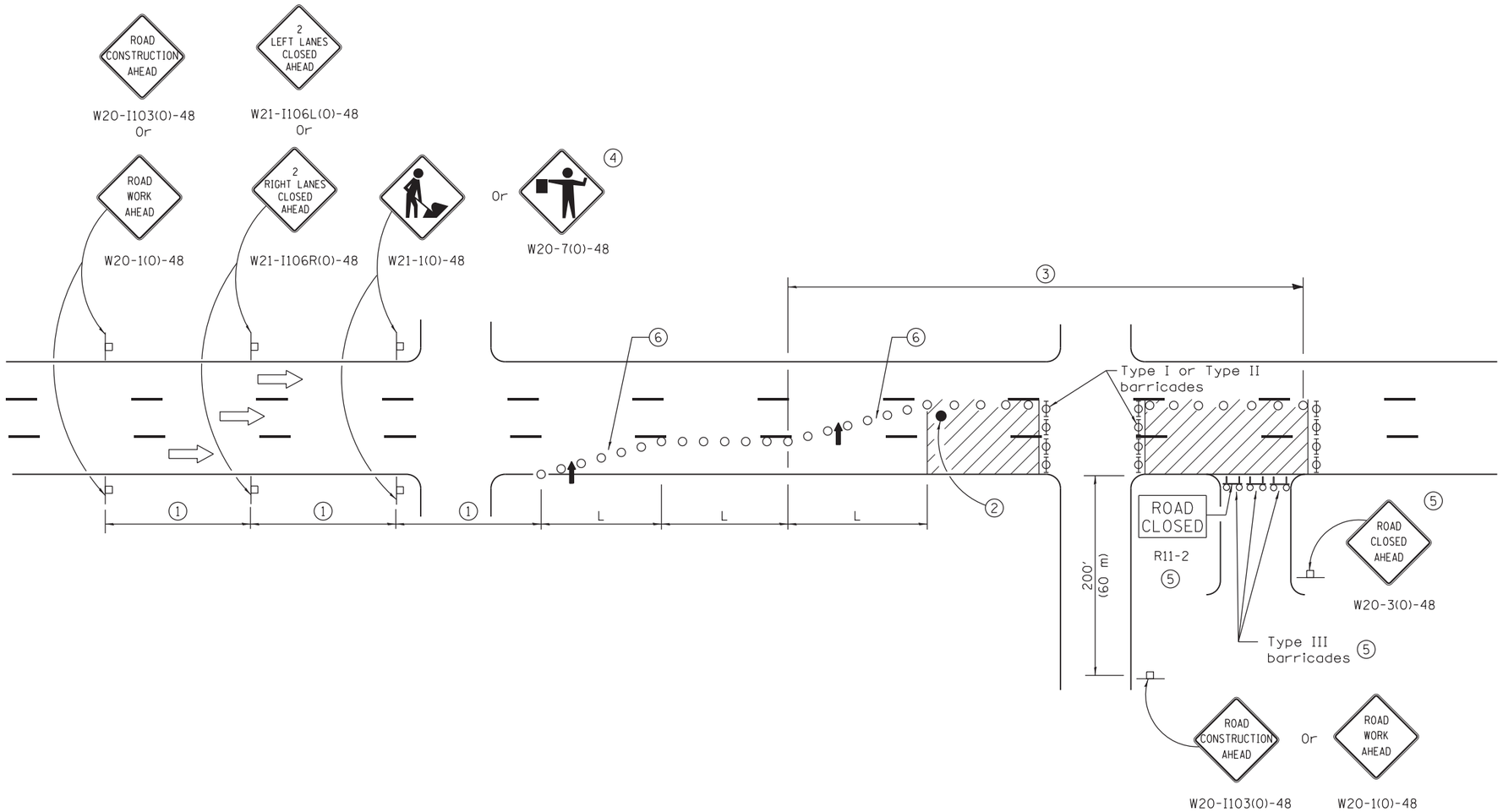

Illinois Department of Transportation

APPROVED January 1, 2014
ENGINEER OF SAFETY ENGINEERING

APPROVED January 1, 2014
ENGINEER OF DESIGN AND ENVIRONMENT

ISSUED 1-1-97

URBAN LANE CLOSURE, MULTILANE, 1W OR 2W WITH NONTRAVERSABLE MEDIAN

(Sheet 2 of 2)

STANDARD 701601–09

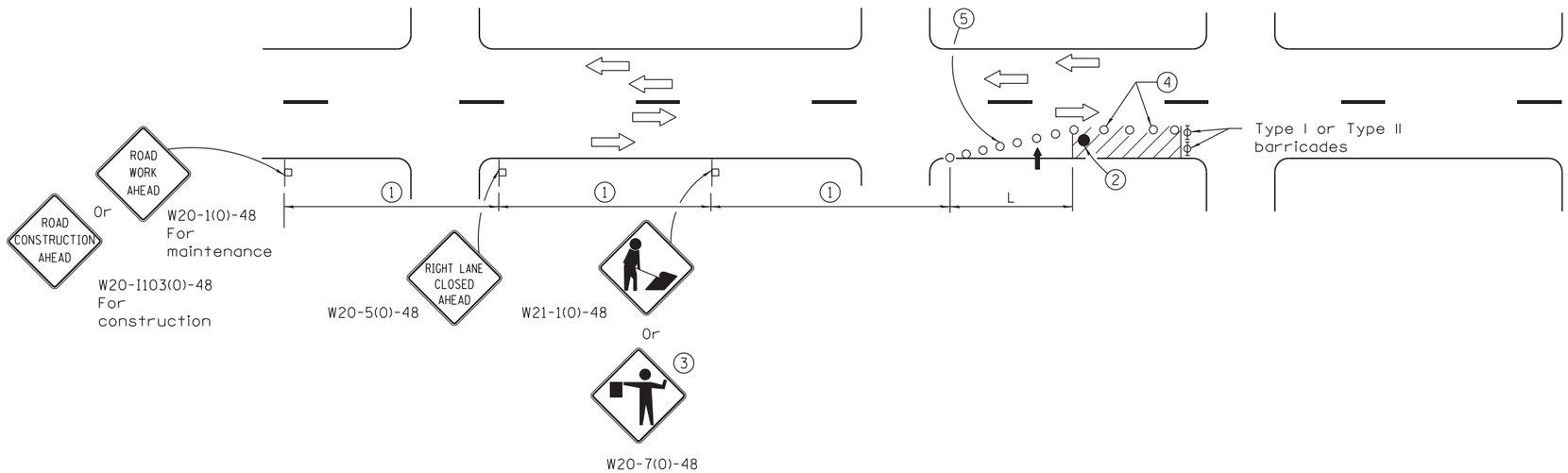

SIGN SPACING	
Posted Speed	Sign Spacing
55	500′ (150 m)
50-45	350′ (100 m)
<45	200′ (60 m)

SYMBOLS

- Arrow board
- Cone, drum or barricade
- Sign on portable or permanent support
- Work area
- Barricade or drum with flashing light
- Flagger with traffic control sign.

1. Refer to SIGN SPACING TABLE for distances.
2. Required for speeds > 40 mph.
3. Use flagger sign only when flagger is present.
4. Cones at 25′ (8 m) centers for 250′ (75 m). Additional cones may be placed at 50′ (15 m) centers. When drums or Type I or Type II barricades are used, the interval between devices may be doubled.
5. Cones, drums or barricades at 20′ (6 m) centers in taper.

GENERAL NOTES

This Standard is used where at any time, day or night, any vehicle, equipment, workers or their activities encroach on the pavement requiring the closure of one traffic lane in an Urban area.

Calculate L as follows:

SPEED LIMIT	FORMULAS English	FORMULAS (Metric)
40 mph (70 km/h) or less:	$L = \frac{WS^2}{60}$	$L = \frac{WS^2}{150}$
45 mph (80 km/h) or greater:	L=(W)(S)	L=0.65(W)(S)

W = Width of offset in feet (meters).

S = Normal posted speed mph (km/h).

All dimensions are in inches (millimeters) unless otherwise shown.

Illinois Department of Transportation

APPROVED January 1, 2015
ENGINEER OF SAFETY ENGINEERING

APPROVED January 1, 2015
ENGINEER OF DESIGN AND ENVIRONMENT

ISSUED 1-1-97

DATE	REVISIONS
1-1-15	Renamed standard. Moved
	case on Sheet 2 to new
	Highway Standard.
1-1-14	Revised workers sign
	number to agree with
	current MUTCD.

URBAN SINGLE LANE CLOSURE, MULTILANE, 2W WITH MOUNTABLE MEDIAN

STANDARD 701606–10

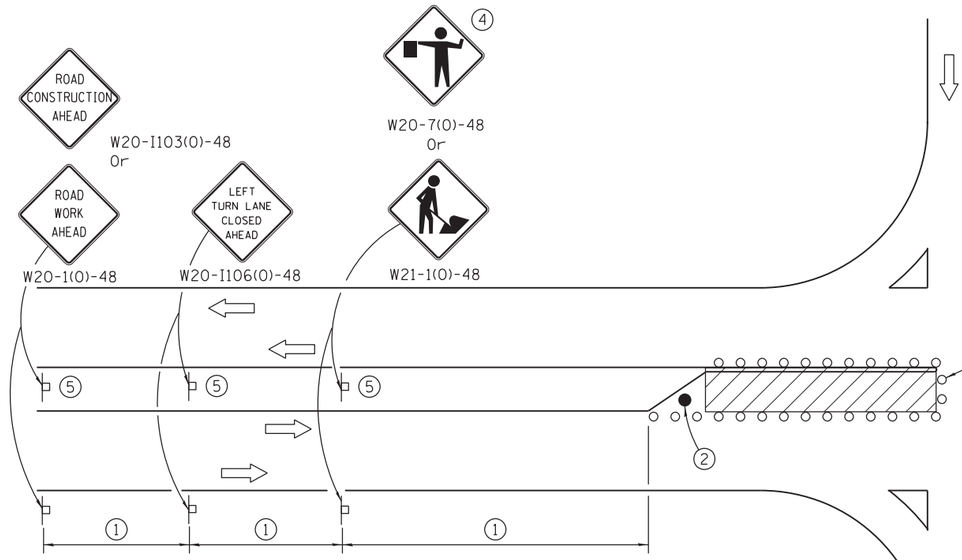

LEFT TURN LANE OR CENTER MEDIAN OPERATIONS

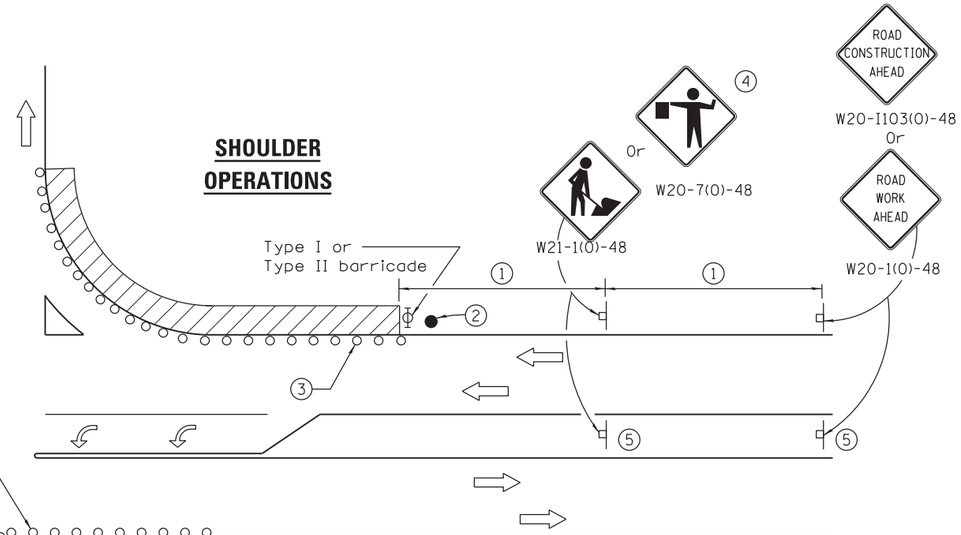

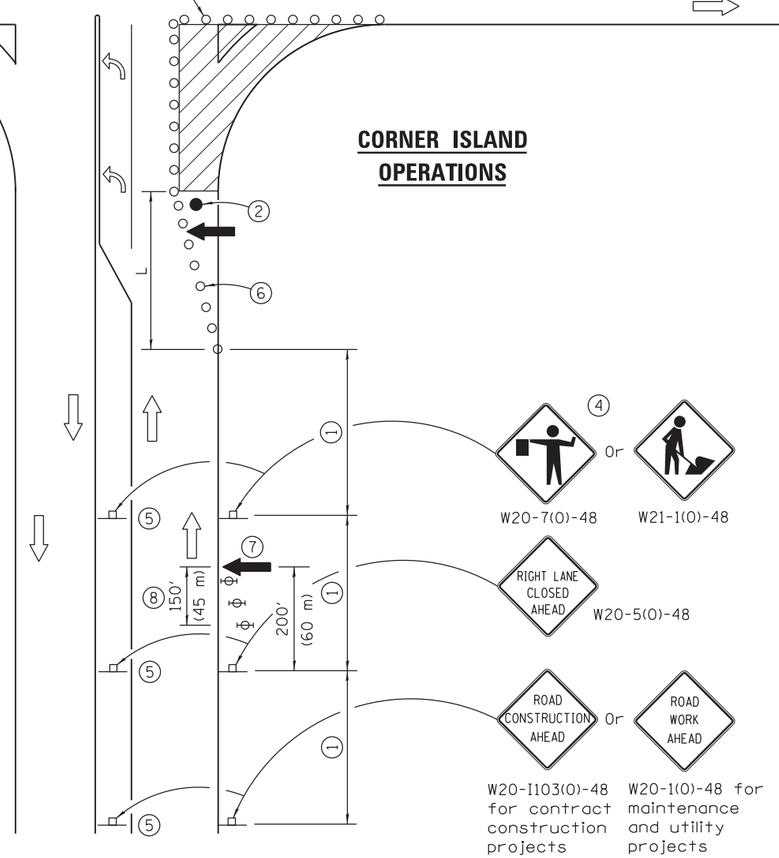

SIGN SPACING	
Posted Speed	Sign Spacing
55	500′ (150 m)
50-45	350′ (100 m)
<45	200′ (60 m)

1. Refer to SIGN SPACING TABLE for distance.
2. Required for speed > 40 mph.
3. Cones at 25′ (8 m) centers for 250′ (75 m). Additional cones may be placed at 50′ (15 m) centers. When drums or Type I or Type II barricades are used, the interval between devices may be doubled.
4. Use flagger sign only when flagger is present.
5. Omit this sign when median is less than 10′ (3 m) or for bi-directional turn lanes.
6. Cones, drums or barricades at 20′ (6 m) centers in taper.
7. Advanced arrow board required for speeds > 45 mph.
8. Three Type II barricades, drums or vertical barricades at 50′ (15 m) centers.

SYMBOLS

- Work area
- Cone, drum or barricade
- Sign on portable or permanent support
- Arrow board
- Barricade or drum with flashing light
- Flagger with traffic control sign

GENERAL NOTES

This Standard is used where at any time, day or night, any vehicle, equipment, workers or their activities encroach on the pavement during shoulder operations or where construction requires lane closures in an urban area.

Calculate L as follows:

SPEED LIMIT	FORMULAS English	FORMULAS (Metric)
40 mph (70 km/h) or less:	$L = \frac{WS^2}{60}$	$L = \frac{WS^2}{150}$
45 mph (80 km/h) or greater:	L=(W)(S)	L=0.65(W)(S)

W = Width of offset in feet (meters).

S = Normal posted speed mph (km/h).

All dimensions are in inches (millimeters) unless otherwise shown.

Illinois Department of Transportation

APPROVED April 1, 2016
ENGINEER OF SAFETY ENGINEERING
APPROVED April 1, 2016
ENGINEER OF DESIGN AND ENVIRONMENT

ISSUED 1-1-97

DATE	REVISIONS
4-1-16	Corrected sign number for
	LEFT TURN LANE CLOSED
	AHEAD.
1-1-14	Added devices at arrow
	board upstream from taper.
	Rev. workers sign number.

URBAN LANE CLOSURE, MULTILANE INTERSECTION

STANDARD 701701–10

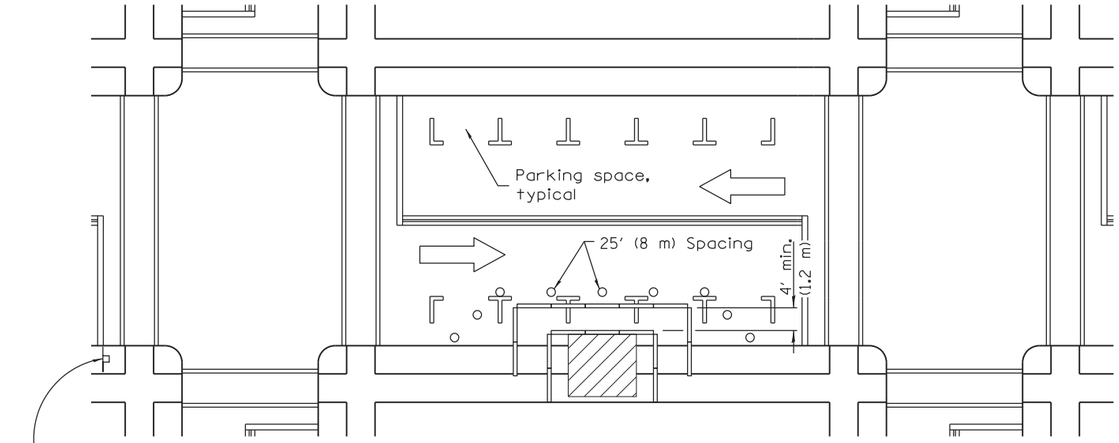

① Omit whenever duplicated by road work traffic control.

① ROAD CONSTRUCTION AHEAD — W20-I103(0)-48 for contract construction projects

Or

① ROAD WORK AHEAD — W20-1(0)-48 for maintenance and utility projects

SIDEWALK DIVERSION

SYMBOLS

- Work area
- Sign on portable or permanent support
- Barricade or drum
- Cone, drum or barricade
- Type III barricade
- Detectable pedestrian channelizing barricade

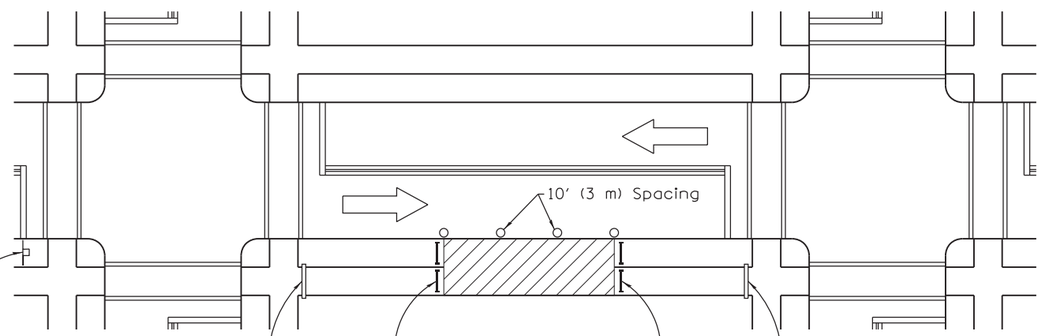

① ROAD CONSTRUCTION AHEAD — W20-I103(0)-48 for contract construction projects

Or

① ROAD WORK AHEAD — W20-1(0)-48 for maintenance and utility projects

SIDEWALK CLOSED — R11-I101-2418

SIDEWALK CLOSED / USE OTHER SIDE — R11-I102-2430

SIDEWALK CLOSED / USE OTHER SIDE — R11-I102-2430

SIDEWALK CLOSURE

GENERAL NOTES

This Standard is used where, at any time, pedestrian traffic must be rerouted due to work being performed.

This Standard must be used in conjunction with other Traffic Control & Protection Standards when roadway traffic is affected.

Temporary facilities shall be detectable and accessible.

The temporary pedestrian facilities shall be provided on the same side of the closed facilities whenever possible.

The SIDEWALK CLOSED / USE OTHER SIDE sign shall be placed at the nearest crosswalk or intersection to each end of the closure. Where the closure occurs at a corner, the signs shall be erected on the corners across the street from the closure. The SIDEWALK CLOSED signs shall be used at the ends of the actual closures.

Type III barricades and R11-2-4830 signs shall be positioned as shown in "ROAD CLOSED TO ALL TRAFFIC" detail on Standard 701901.

All dimensions are in inches (millimeters) unless otherwise shown.

DATE	REVISIONS
4-1-16	Omitted orange safety fence
	from standard as this is
	covered in the std. spec.
1-1-12	Added SIDEWALK DIVERSION.
	Modified appearance of
	plan views. Renamed Std.

Illinois Department of Transportation

APPROVED April 1, 2016
ENGINEER OF SAFETY ENGINEERING

APPROVED April 1, 2016
ENGINEER OF DESIGN AND ENVIRONMENT

ISSUED 1-1-97

SIDEWALK, CORNER OR CROSSWALK CLOSURE

(Sheet 1 of 2)

STANDARD 701801–06

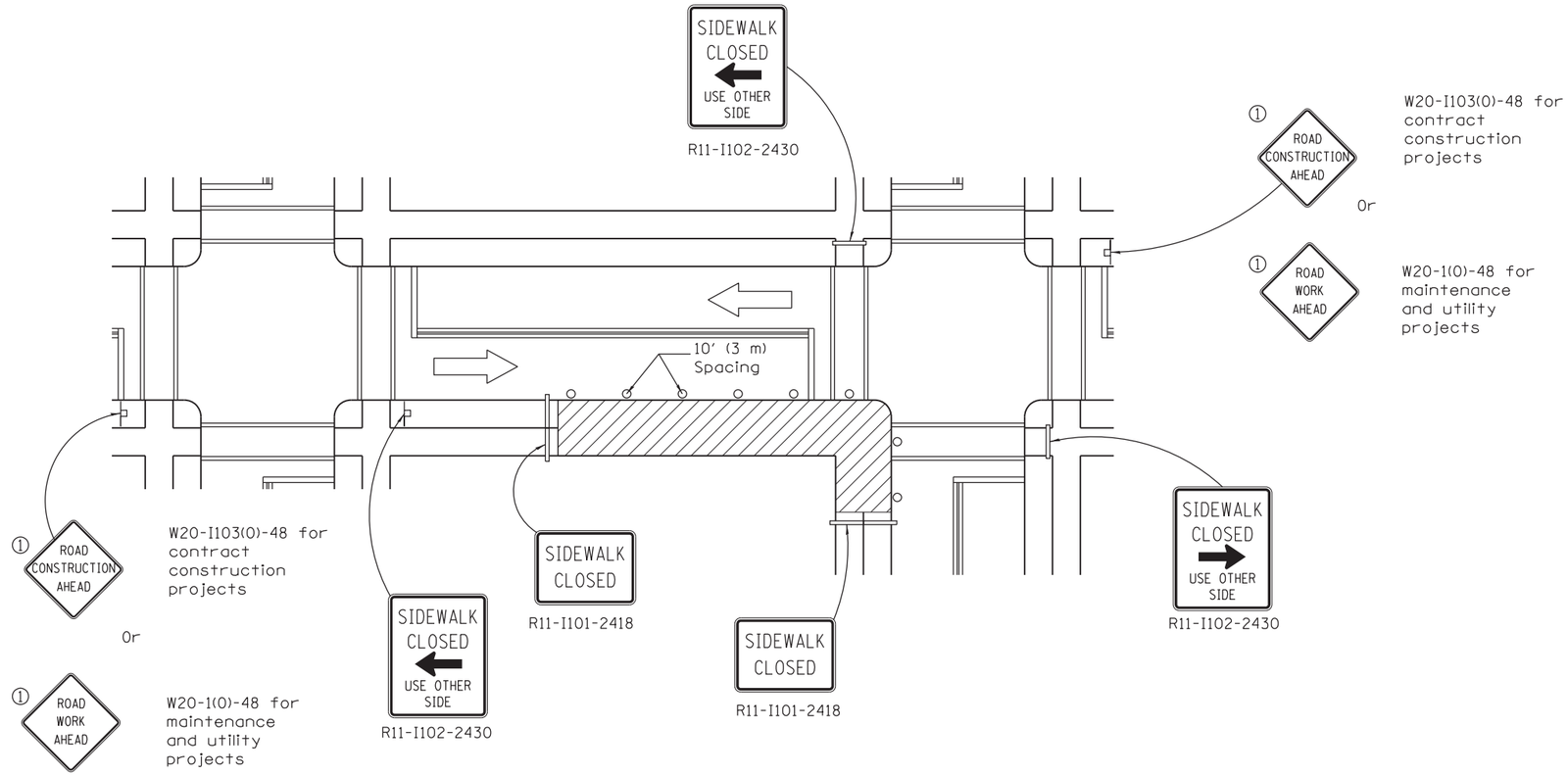

CORNER CLOSURE

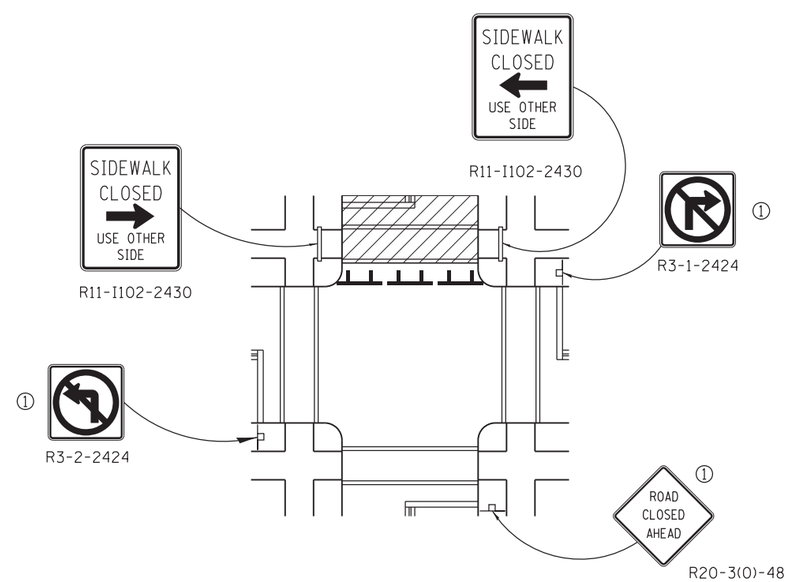

CROSSWALK CLOSURE

Illinois Department of Transportation

APPROVED April 1, 2016
ENGINEER OF SAFETY ENGINEERING
APPROVED April 1, 2016
ENGINEER OF DESIGN AND EVIRONMENT

ISSUED 1-1-97

SIDEWALK, CORNER OR CROSSWALK CLOSURE

(Sheet 2 of 2)

STANDARD 701801–06

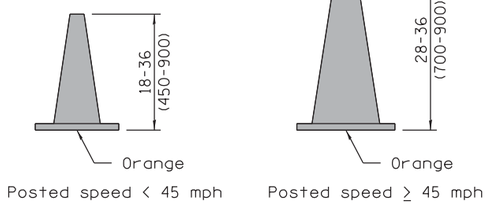

CONE FOR DAYTIME

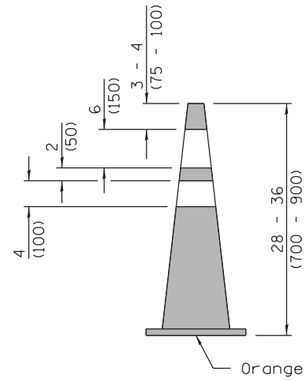

REFLECTORIZED CONE FOR NIGHTTIME

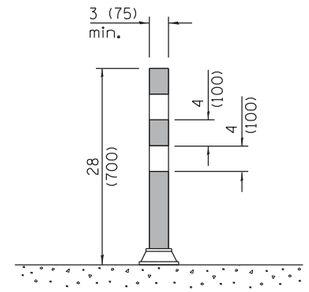

FLEXIBLE DELINEATOR

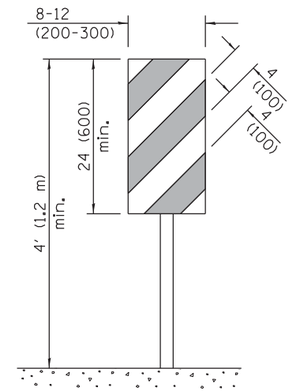

VERTICAL PANEL
POST MOUNTED

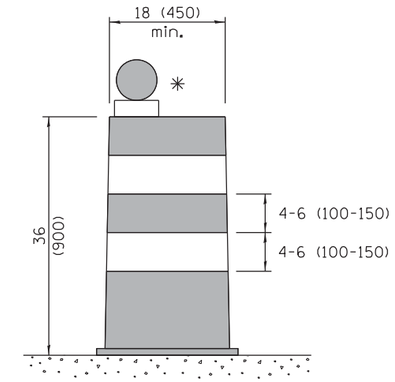

DRUM

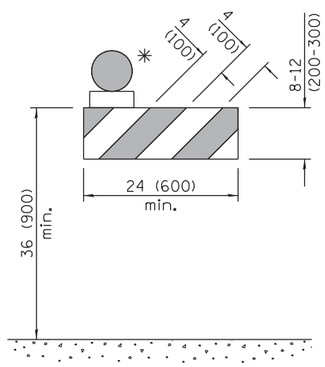

TYPE I BARRICADE

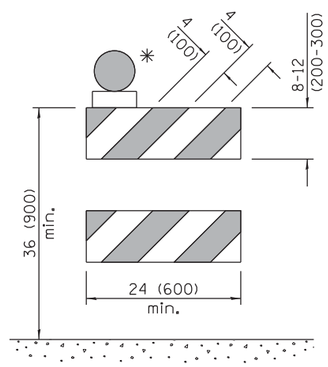

TYPE II BARRICADE

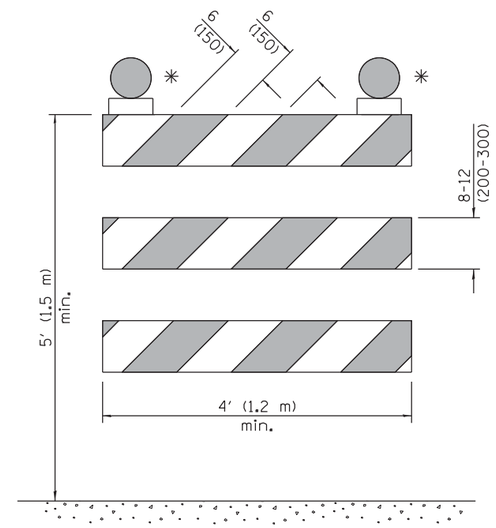

TYPE III BARRICADE

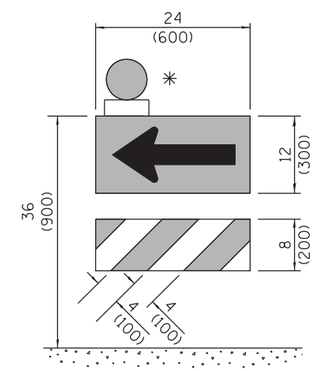

DIRECTION INDICATOR BARRICADE

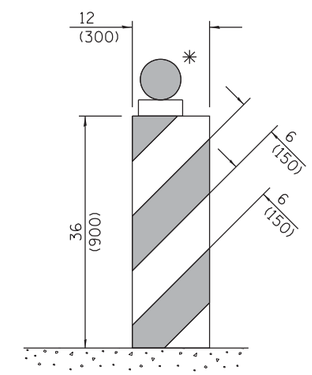

VERTICAL BARRICADE

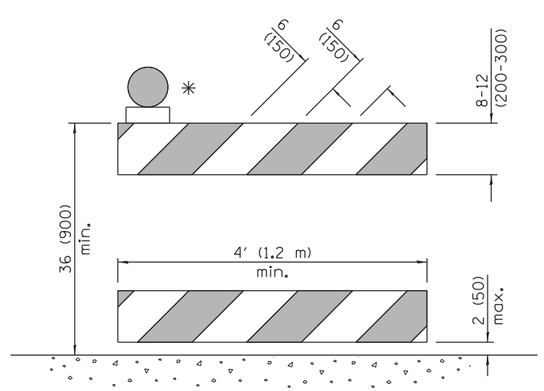

DETECTABLE PEDESTRIAN CHANNELIZING BARRICADE

✳ Warning lights (if required)

GENERAL NOTES

All heights shown shall be measured above the pavement surface.

All dimensions are in inches (millimeters) unless otherwise shown.

DATE	REVISIONS
4-1-16	Add dim's to barricades. Rev.
	note for post mnt. signs.
	Rev. cone dtls. Add W12-I103.
1-1-15	Revised two sign numbers on
	sheet 2. Added note reg.
	PHOTO ENFORCED plaque.

TRAFFIC CONTROL DEVICES

(Sheet 1 of 3)

STANDARD 701901–05

SHEET 35 OF 38

Illinois Department of Transportation

APPROVED April 1, 2016
ENGINEER OF OPERATIONS

APPROVED April 1, 2016
ENGINEER OF DESIGN AND ENVIRONMENT

ISSUED 1-1-97

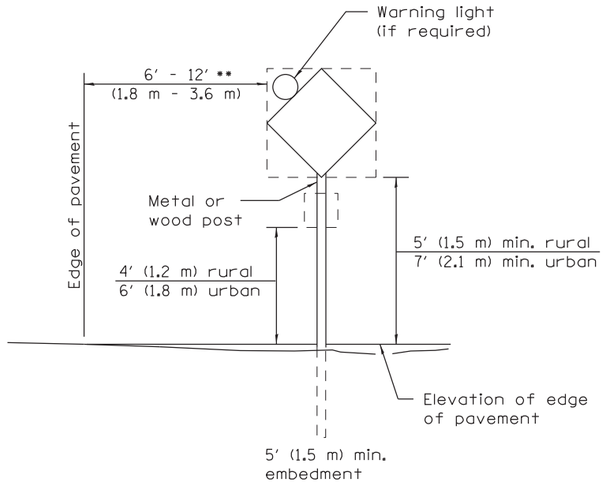

POST MOUNTED SIGNS

** When curb or paved shoulder are present this dimension shall be 24 (600) to the face of curb or 6′ (1.8 m) to the outside edge of the paved shoulder.

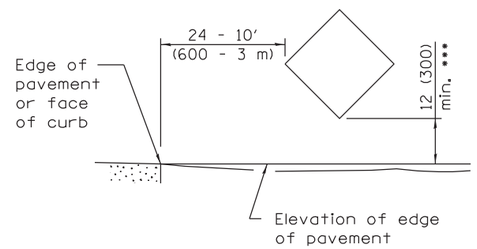

SIGNS ON TEMPORARY SUPPORTS

*** When work operations exceed four days, this dimension shall be 5′ (1.5 m) min. If located behind other devices, the height shall be sufficient to be seen completely above the devices.

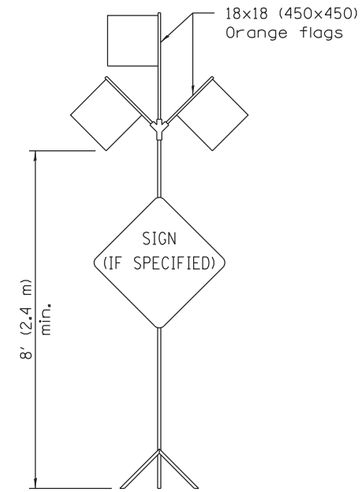

HIGH LEVEL WARNING DEVICE

W12-I103-4848

WIDTH RESTRICTION SIGN

XX′-XX″ width and X miles are variable.

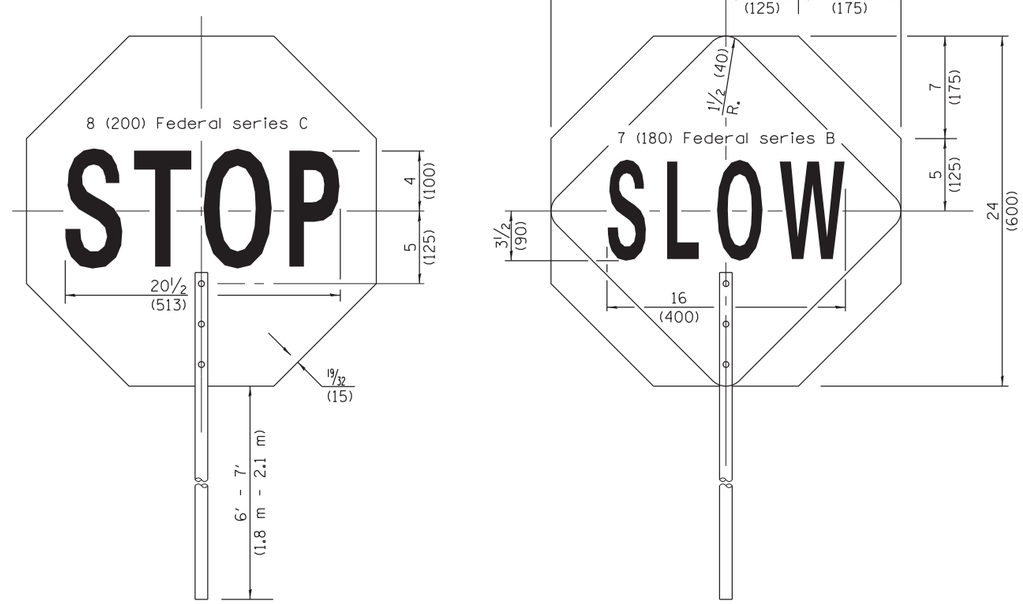

FRONT SIDE

REVERSE SIDE

FLAGGER TRAFFIC CONTROL SIGN

G20-I104(0)-6036 G20-I105(0)-6024

This signing is required for all projects 2 miles (3200 m) or more in length.

ROAD CONSTRUCTION NEXT X MILES sign shall be placed 500′ (150 m) in advance of project limits.

END CONSTRUCTION sign shall be erected at the end of the job unless another job is within 2 miles (3200 m).

Dual sign displays shall be utilized on multi-lane highways.

WORK LIMIT SIGNING

W21-I115(0)-3618

R2-1-3648

R10-I108p-3618 ****

R2-I106p-3618

Sign assembly as shown on Standards or as allowed by District Operations.

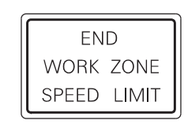

G20-I103(0)-6036

This sign shall be used when the above sign assembly is used.

HIGHWAY CONSTRUCTION SPEED ZONE SIGNS

**** R10-I108p shall only be used along roadways under the juristiction of the State.

Illinois Department of Transportation

APPROVED April 1, 2016
ENGINEER OF OPERATIONS

APPROVED April 1, 2016
ENGINEER OF DESIGN AND ENVIRONMENT

ISSUED 1-1-97

TRAFFIC CONTROL DEVICES

(Sheet 2 of 3)

STANDARD 701901–05

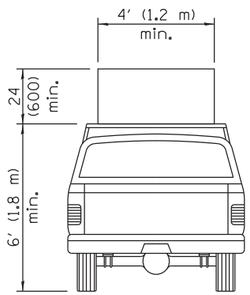

TYPE A ROOF MOUNTED

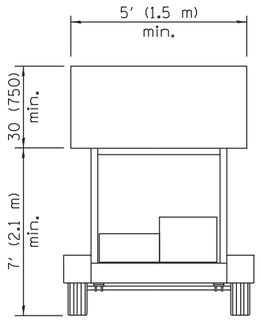

TYPE B ROOF OR TRAILER MOUNTED

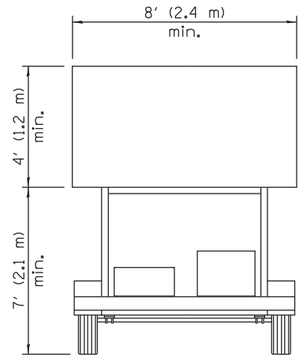

TYPE C TRAILER MOUNTED

ARROW BOARDS

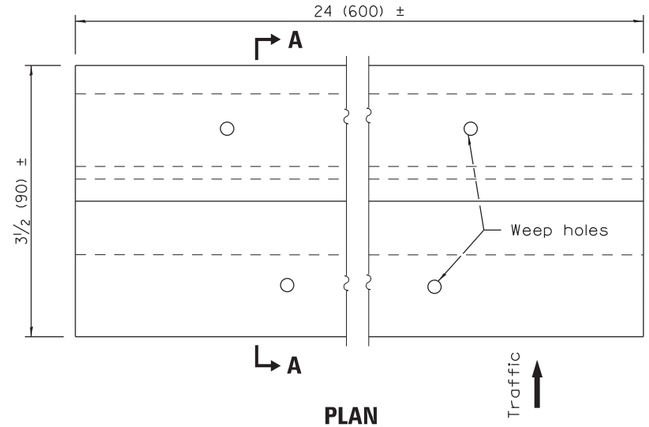

PLAN

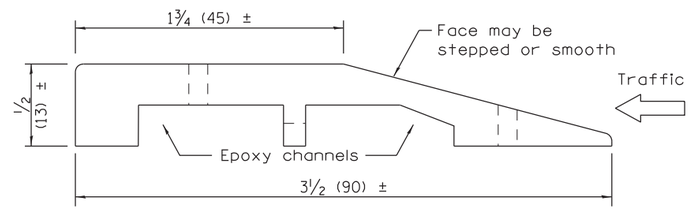

SECTION A–A

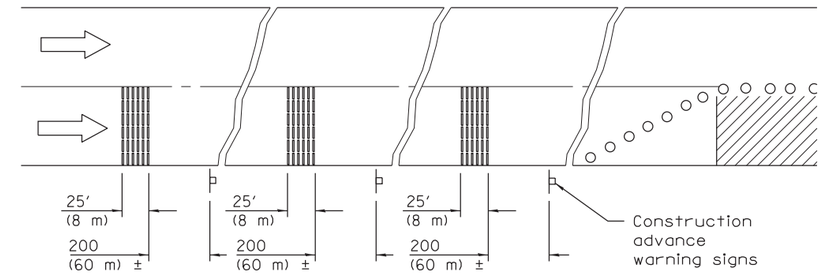

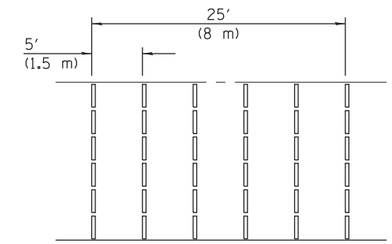

TYPICAL INSTALLATION

TEMPORARY RUMBLE STRIPS

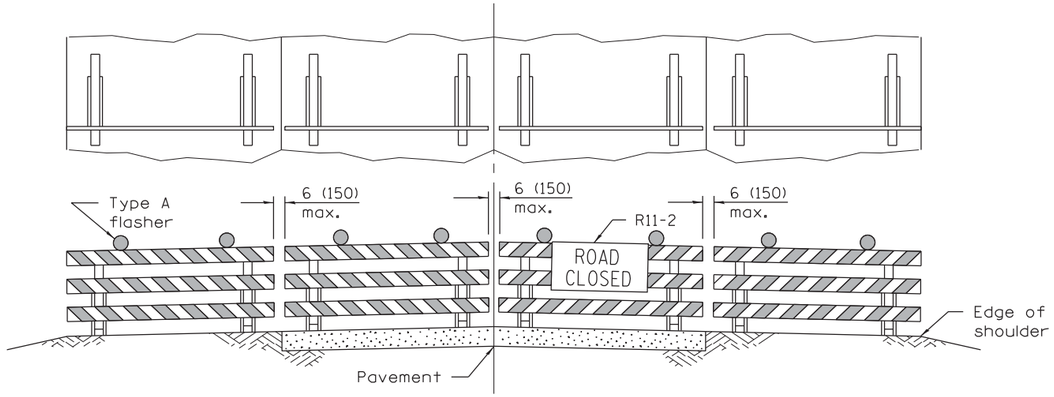

ROAD CLOSED TO ALL TRAFFIC

Reflectorized striping may be omitted on the back side of the barricades. If a Type III barricade with an attached sign panel which meets NCHRP 350 is not available, the sign may be mounted on an NCHRP 350 temporary sign support directly in front of the barricade.

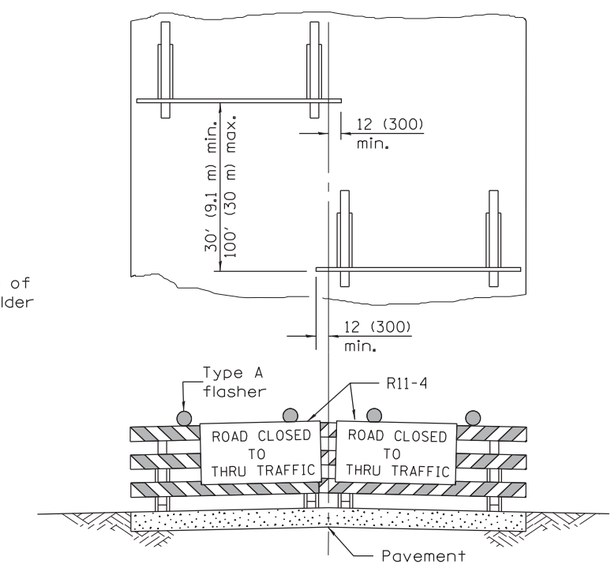

ROAD CLOSED TO THRU TRAFFIC

Reflectorized striping shall appear on both sides of the barricades. If a Type III barricade with an attached sign panel which meets NCHRP 350 is not available, the signs may be mounted on NCHRP 350 temporary sign supports directly in front of the barricade.

TYPICAL APPLICATIONS OF TYPE III BARRICADES CLOSING A ROAD

Illinois Department of Transportation

APPROVED April 1, 2016
ENGINEER OF OPERATIONS

APPROVED April 1, 2016
ENGINEER OF DESIGN AND ENVIRONMENT

ISSUED 1-1-97

TRAFFIC CONTROL DEVICES

(Sheet 3 of 3)

STANDARD 701901–05

TRAFFIC SIGNAL LEGEND

ITEM	REMOVAL	EXISTING	PROPOSED
CONTROLLER CABINET	R		
RAILROAD CONTROL CABINET			
COMMUNICATIONS CABINET	R CC	ECC	CC
MASTER CONTROLLER		EMC	MC
MASTER MASTER CONTROLLER		EMMC	MMC
UNINTERRUPTABLE POWER SUPPLY	R UPS	EUPS	UPS
SERVICE INSTALLATION, (P) POLE OR (G) GROUND MOUNT	R	P	P
TELEPHONE CONNECTION (P) POLE OR (G) GROUND MOUNT	R T	P T	P T
STEEL MAST ARM ASSEMBLY AND POLE	R		
ALUMINUM MAST ARM ASSEMBLY AND POLE	R		
STEEL COMBINATION MAST ARM ASSEMBLY AND POLE WITH LUMINAIRE	R		
STEEL COMBINATION MAST ARM ASSEMBLY AND POLE WITH PTZ CAMERA	R PTZ	PTZ	PTZ
SIGNAL POST	R		
TEMPORARY WOOD POLE (CLASS 5 OR BETTER) 45 FOOT (13.7m) MINIMUM	R		
GUY WIRE	R		
SIGNAL HEAD	R		
SIGNAL HEAD CONSTRUCTION STAGES (NUMBERS INDICATE THE CONSTRUCTION STAGE)			2
SIGNAL HEAD WITH BACKPLATE	R		
SIGNAL HEAD OPTICALLY PROGRAMMED	R "P"	"P"	"P"
FLASHER INSTALLATION (S DENOTES SOLAR POWER)	R "F"	"F"	"F"
PEDESTRIAN SIGNAL HEAD	R		
PEDESTRIAN PUSHBUTTON DETECTOR	R		
ACCESSIBLE PEDESTRIAN PUSHBUTTON DETECTOR	R APS	APS	APS
ILLUMINATED SIGN "NO LEFT TURN"	R		
ILLUMINATED SIGN "NO RIGHT TURN"	R		
DETECTOR LOOP, TYPE I			
PREFORMED DETECTOR LOOP		P	P
MICROWAVE VEHICLE SENSOR	R M	M	M
VIDEO DETECTION CAMERA	R V	V	V
VIDEO DETECTION ZONE			
PAN, TILT, ZOOM CAMERA	R PTZ	PTZ	PTZ
WIRELESS DETECTOR SENSOR	R W	W	W
WIRELESS ACCESS POINT	R		

ITEM	REMOVAL	EXISTING	PROPOSED
EMERGENCY VEHICLE LIGHT DETECTOR	R		
CONFIRMATION BEACON	R		
HANDHOLE	R		
HEAVY DUTY HANDHOLE	R H	H	H
DOUBLE HANDHOLE	R		
JUNCTION BOX	R		
UNDERGROUND CONDUIT, GALVANIZED STEEL (UC)			
TEMPORARY SPAN WIRE, TETHER WIRE, AND CABLE	R		
COMMON TRENCH			CT
COILABLE NONMETALLIC CONDUIT (EMPTY)			CNC
SYSTEM ITEM		S	S
INTERSECTION ITEM		I	IP
REMOVE ITEM	R		
RELOCATE ITEM	RL		
ABANDON ITEM	A		
12" (300mm) TRAFFIC SIGNAL SECTION		R	R
12" (300mm) RED WITH 8" (200mm) YELLOW AND GREEN TRAFFIC SIGNAL FACE		R Y G	
SIGNAL FACE		R Y G Y G	R Y G Y G
SIGNAL FACE WITH BACKPLATE. "P" INDICATES PROGRAMMED HEAD "RB" INDICATES REFLECTIVE BACKPLATE		R Y G Y G "P"	R Y G Y G "P"
12" (300mm) PEDESTRIAN SIGNAL HEAD WALK/DON'T WALK SYMBOL		DW W	
12" (300mm) PEDESTRIAN SIGNAL HEAD INTERNATIONAL SYMBOL, OUTLINED			
12" (300mm) PEDESTRIAN SIGNAL HEAD INTERNATIONAL SYMBOL, SOLID			
PEDESTRIAN SIGNAL HEAD, INTERNATIONAL SYMBOL, WITH COUNTDOWN TIMER		C D	C D
RADIO INTERCONNECT	R		
RADIO REPEATER	R ERR	ERR	RR
DENOTES NUMBER OF CONDUCTORS, ELECTRIC CABLE NO. 14, UNLESS NOTED OTHERWISE, ALL DETECTOR LOOP CABLE TO BE SHIELDED		5	5
GROUND CABLE IN CONDUIT NO. 6 SOLID COPPER (GREEN)		1	1

ITEM	REMOVAL	EXISTING	PROPOSED
ELECTRIC CABLE IN CONDUIT, TRACER, NO. 14 1/C, UNLESS NOTED OTHERWISE		1	1
COAXIAL CABLE		C	C
VENDOR CABLE FOR CAMERA		V	V
COPPER INTERCONNECT CABLE, NO. 18 3 PAIR TWISTED, SHIELDED		6	6
FIBER OPTIC CABLE NO. 62.5/125, MM12F		12F	
FIBER OPTIC CABLE NO. 62.5/125, MM12F SM12F		24F	24F
FIBER OPTIC CABLE NO. 62.5/125, MM12F SM24F		36F	36F
GROUND ROD AT (C) CONTROLLER, (H) HANDHOLE, (P) POST, (M) MAST ARM, OR (S) SERVICE		C	C
CONTROLLER CABINET AND FOUNDATION TO BE REMOVED	RCF		
STEEL MAST ARM POLE AND FOUNDATION TO BE REMOVED	RMF		
ALUMINUM MAST ARM POLE AND FOUNDATION TO BE REMOVED	RMF		
STEEL COMBINATION MAST ARM ASSEMBLY AND POLE WITH LUMINAIRE AND FOUNDATION TO BE REMOVED	RMF		
SIGNAL POST AND FOUNDATION TO BE REMOVED	RPF		
INTERSECTION & SAMPLING (SYSTEM) DETECTOR		IS	IS
SAMPLING (SYSTEM) DETECTOR		S	S
QUEUE DETECTOR		Q	Q
PREFORMED QUEUE DETECTOR		PQ	PQ
PREFORMED INTERSECTION AND SAMPLING (SYSTEM) DETECTOR		PIS	PIS
PREFORMED SAMPLING (SYSTEM) DETECTOR		PS	PS

RAILROAD SYMBOLS

	EXISTING	PROPOSED
RAILROAD CONTROL CABINET		
RAILROAD CANTILEVER MAST ARM		
FLASHING SIGNAL		
CROSSING GATE		
CROSSBUCK		

REVISIONS / REMARKS					
NO.	DESCRIPTION	DATE	BY	SURVEYOR:	__/__
				DSGNR/LIAISON:	
		__/__/__		PLOTTED BY: khdi8691 3/9/2016	

LakeCounty
Division of Transportation

2016 PASSAGE NETWORK TRAFFIC COUNTERS

DISTRICT ONE - STD TRAFFIC SIGNAL DESIGN DETAILS

ROUTE	SECTION	SECTION NUMBER	SHEET	SHEETS
VAR	VAR	16-00999-22-TL	38	38

FILE NAME: U:\DOT\Traffic\2016 Traffic Counter Installation\Plans\Traffic Counters.dgn