STATE OF ILLINOIS
COUNTY OF LAKE
PLANS FOR PROPOSED GRASS LAKE ROAD RESURFACING
SECTION 14-00059-09-RS

INDEX OF SHEETS

SHEET No.	DESCRIPTION
1	COVER SHEET
2 - 3	GENERAL NOTES
4	SUMMARY OF QUANTITES
5 - 9	SCHEDULE OF QUANTITES
10 - 13	TYPICAL SECTIONS
14 - 20	TRAFFIC CONTROL PLAN
21 - 35	REMOVAL & ADJUSTMENT ITEMS
36 - 50	PLAN SHEETS
51 - 53	DRAINAGE DITCHING
54	BUTT JOINT DETAIL
55	EROSION CONTROL PLAN
56 - 63	LCDOT DETAILS
64 - 85	IDOT DETAILS

IDOT HIGHWAY STANDARDS

000001-06 701006-05 701501-06
442201-03 701301-04 701901-04
630001-10 701311-03 BLR 24-2
701001-02

LCDOT STANDARD DETAILS

LC7000 LC7200
LC7003 LC7802
LC7004 LC7800
LC7005 LC7805

PAVEMENT DESIGN FOR RESURFACING

IBR Value (for resurfacing only assume 3.00) => **3.00**

REQUIRED STRUCTURAL NUMBER = 3.943

MILLING DEPTH =>	**2.25**	INCHES
BITUMINOUS SURFACE COURSE THICKNESS =>	**1.50**	INCHES
BITUMINOUS BINDER COURSE THICKNESS =>	**0.00**	INCHES
BITUMINOUS LEVELING BINDER (NOMINAL) THICKNESS =>	**0.75**	INCHES
BITUMINOUS BASE COURSE THICKNESS =>	**0.00**	INCHES

DYNAFLECT EQUIVALENT STRUCTURAL VALUE OF EXISTING PAVEMENT = 3.49

STRUCTURAL VALUE LOSS DUE TO MILLING (0.2 PER MILLING DEPTH INCH) = -0.45

STRUCTURAL VALUE GAIN DUE TO PROPOSED BITUMINOUS OVERLAY = 0.90 (0.4 PER BITUMINOUS INCH THICKNESS)

HOT-MIX ASPHALT MIXTURE REQUIREMENTS

MIXTURE TYPE	AC TYPE	AIR VOIDS
HOT-MIX ASPHALT SURFACE COURSE, MIX "D", N50	PG 64-22	4% = 50 GYRATION
HOT-MIX ASPHALT BINDER COURSE, IL-19.0, N50	PG 64-22	4% = 50 GYRATION
POLYMERIZED LEVELING BINDER (MACHINE METHOD), IL-4.75, N50	PG 64-22	3.5% = 50 GYRATION

THE UNIT WEIGHT USED TO CALCULATE BINDER AND SURFACE COURSE HMA MIXTURE QUANTITIES IS 112 LBS/SQ YD/IN.

THE UNIT WEIGHT USED TO CALCULATE POLYMERIZED LEVELING BINDER HMA MIXTURE QUANTITIES IS 110 LBS/SQ YD/IN.

WHEN RAP EXCEEDS 20%, THE NEW ASPHALT BINDER IN THE MIX SHALL BE PG 58-22.

FOR UNDERGROUND UTILITY

LOCATIONS, CALL

J. U. L. I. E.

TOLL FREE

800-892-0123

PROJECT LOCATION

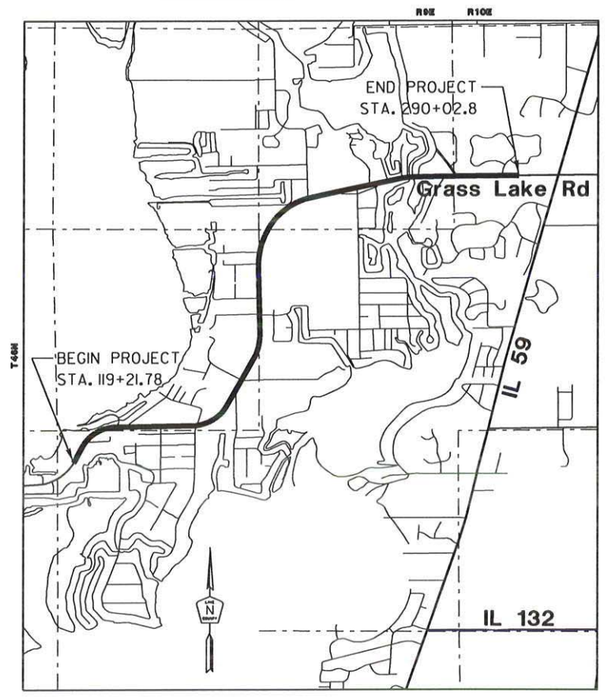

ROAD	STATION	STATION	LENGTH (FT.)	LENGTH (MI.)
Grass Lake Rd	119+21.78	290+02.8	17,081.02	3.235
OMIT BRIDGE DECK	252+49.94	253+85.94	136.00	0.026
NET LENGTH OF IMPROVEMENT			16,945.02	3.209

GRASS LAKE ROAD RESURFACING | 14-00059-09-RS

RICHARD D. McMORRIS
062-055379
LICENSED PROFESSIONAL ENGINEER OF ILLINOIS

Plans Prepared By: LakeCounty Division of Transportation

Signature: [signature]
Date: 28 May 2015
Illinois License No: 062-055379
Expiration Date: 11/30/2015
Field: CIVIL
Approved By: Paula Trigg, County Engineer
Date: May 28, 2015

REVISIONS / REMARKS					
NO.	DESCRIPTION	DATE	BY	SURVEYOR:	/
		/ /		DSGNR/LIAISON:	
		/ /		PLOTTED BY:	hdmxb 5/28/2015

GRASS LAKE ROAD RESURFACING
COVER SHEET

ROUTE	SECTION	SECTION NUMBER	SHEET	SHEETS
CH18	59	14-00059-09-RS	1	85

FILE NAME: U:\Design\Burke\14-00059-09-RS Grass Lake Road Resurfacing\Grass Lake Rd Resurfacing (E of Bridge to IL Rt 59)\Grass Lake Working files\14-00059-09-RS master.dgn

LCDOT GENERAL NOTES
(Revised 1/5/15)

1. GENERAL

   a. All construction shall be done according to the State of Illinois "Standard Specifications for Road and Bridge Construction" adopted Jan. 1, 2012; the "Supplemental Specifications and Recurring Special Provisions, adopted Jan. 1, 2015; the latest edition of the "Illinois Manual on Uniform Traffic Control devices for Streets and Highways" the details in these plans, and the Special Provisions included in the contract documents.

   b. The Contractor shall notify the Engineer at least 72 hours prior to beginning work and shall coordinate all construction operations with the Engineer.

   c. The Contractor shall coordinate his/her work with any adjacent projects that are or may be under construction.

   d. The Contractor shall verify all dimensions and existing conditions in the field prior to ordering materials and beginning construction. Where new work is proposed to meet existing features, it shall be the Contractor's responsibility to field check all dimensions and elevations and notify the Engineer of discrepancies before proceeding with construction.

   e. The Contractor shall provide access to abutting properties at all times during construction, except for brief periods of interruption. The Contractor shall notify the property owner no less than 24 hours in advance of the interruption of access and/or services. The notification will include the time and duration of the interruption. The cost to provide access shall be paid for and included in the cost of TRAFFIC CONTROL AND PROTECTION (SPECIAL).

2. SURVEY

   a. All elevations shown on these plans are based upon the North American Vertical Datum of 1988 (NAVD 88). The elevations shown on the plans are for finished grades unless otherwise noted.

   b. Were section or subsection monuments are encountered, the Engineer shall be notified before the monuments are removed. The Contractor shall carefully preserve all property marks and monuments until the owner, authorized surveyor or agent has witnessed or otherwise referenced their location.

3. REMOVAL

   a. The Contractor shall saw cut the existing pavement, concrete curb & gutter, median, hot-mix asphalt shoulder; sidewalk; and/or other appurtenances as shown on the plans, to separate the existing material to be removed, by means of an approved concrete saw to a depth shown on the plans or as directed by the Engineer. This work shall be included in the cost of the item being removed.

      The Contractor shall be required to saw vertical cuts so as to form clean vertical joints. Should the Contractor deface any edge, a new sawed joint shall be provided and any additional work, including removal and replacement, shall be done at the Contractor's expense.

   b. All excess material shall be disposed of offsite on the day it is excavated or removed.

   c. The Contractor is prohibited from burning any material within or adjacent to the project limits. All excess or waste material shall be hauled away from the project site by the contractor and legally disposed of outside the right-of-way. No extra compensation will be allowed the contractor for any expense incurred by complying with the requirements of this note.

4. DRAINAGE

   a. Unless otherwise noted on the plans, the existing drainage facilities shall remain in use during the period of construction. During construction operations the Contractor shall ensure positive site drainage at the conclusion of each day. Site drainage may be achieved by ditching, pumping, or any other method acceptable to the Engineer.

   b. If during construction, the Contractor encounters or otherwise becomes aware of any sewers or underdrains within the right-of-way other than those shown on the plans, he/she shall inform the Engineer, who shall direct the work necessary to maintain or replace the facilities in service and to protect them from damage during construction if maintained. Existing facilities to be maintained that are damaged because of non-compliance with this provision shall be replaced at the Contractor's own expense. Should the Engineer direct the replacement of a facility, the necessary work and payment shall be according to Sections 550 and 601, and Article 104.02 of the "Standard Specifications".

c. All existing drainage facilities, headwalls and fences no longer required, in the opinion of the Engineer, shall be removed. The cost of removal of existing pipe culverts, storm sewers, drainage structures, concrete headwalls, fencing or other obstructions which interfere with the proposed improvements and which are not shown to be removed as a separate pay item shall be considered included in the cost of EARTH EXCAVATION.

d. During the construction operation when any loose material is deposited in the flow line of ditches, gutters or drainage structures so the natural flow of water is obstructed, the material shall be removed at the close of each working day.

At the conclusion of the construction operations all drainage structures shall be free from all dirt and debris. This work will not be paid for separately but shall be considered included in the unit costs of the various Temporary Erosion Control Systems e.g. INLET FILTERS, INLET PROTECTION SPECIAL, TEMPORARY DITCH CHECKS, etc…

e. Stations, offsets, and invert elevations for flared end sections are given at the centerline of the outlet end of the flared end section. The flared end section shall be installed at the same slope as the outlet pipe.

f. Hot-mix asphalt or concrete pavement crossings shall not be left in gravel overnight. This will include the main road, side streets, private entrances, commercial entrances and parking areas. Temporary hot-mix asphalt patching or steel plates (see steel plate special provision) at the Contractor's expense may be used in lieu of immediate pavement replacement.

5.DRIVEWAYS and ENTRANCES

a.Existing hot-mix asphalt, gravel driveways and gravel entrances shall be re-surfaced to one foot inside the right-of-way with hot-mix asphalt surface course as scheduled on the plans.

b.Existing hot-mix asphalt driveways and entrances shall be sawcut at the limits of construction line. The surface shall be removed to the sawcut. The aggregate base shall be appropriately prepared, and the driveway shall be resurfaced with Hot-Mix Asphalt Surface Course.

c.Existing aggregate field entrances shall be built up in place to one foot inside the right-of-way with aggregate base course.

6.LANDSCAPING: Phosphorus Fertilizer Nutrient shall not be used on Lake County Highways.

7.MILLED PAVEMENT: When milled pavement is open to traffic, the maximum elevation difference between lanes, at concrete curb and gutter, or existing ground (shoulders, entrances etc…) shall not exceed 1.5 inches. With written approval from the Engineer the maximum elevation difference may be up to 3 inches if the edge of the milling is sloped a minimum 3:1 (H:V).

8.SIGNS

a.The Contractor will be required to relocate or remove and replace signs which interfere with his\her construction operations, and to temporarily reset all such signs during construction operations according to Article 107.25 of the “Standard Specifications”.

All unused signs shall be returned to the County.

Longer posts may be required at some temporary or permanent sign locations to maintain proper sign elevations.

9.UTILITIES

a.Location information for underground utility facilities shown on the plans and/or included in the Contract Specifications represents the best information provided to LCDOT, and is only included for the convenience of the Contractor. LCDOT assumes no responsibility for the sufficiency or the accuracy of the location information provided.

b.Before starting any excavation, the Contractor shall contact “JULIE” at 1-800-892-0123 for field locations of buried electric, telephone, gas, water, sewer, cable, etc.., utility lines (minimum 48 hours notification is required).

c.The Contractor shall be responsible for any damage or destruction of public or private property according to the special provisions and Article 107.20 of the “Standard Specifications”. The Contractor shall restore such property at his/her own expense. The Contractor shall use all necessary precautions and protective measures required to maintain existing utilities, sewers, and appurtenances that must be kept in operation. In particular, the Contractor will take adequate measures to prevent the undermining of utilities and sewers which are still in service.

10.MISCELLANEOUS

a.The Contractor shall provide temporary toilet facilities for the use of all the Contractors' personnel employed on the work site, and shall maintain same in proper sanitary condition. The temporary facilities shall include hand sanitizing stations. At the completion of the project, the facilities shall be removed and the premises left clean. The Engineer shall approve the location of the temporary toilets. The cost of this work shall be included in the unit bid prices and no additional compensation will be allowed.

b.Generally 10 foot transitions shall be used to match proposed items of work to existing items in the field, unless otherwise shown on the plans. The transitions shall be paid for at the contract unit price for the proposed item of work specified.

c.The Contractor shall not cross completed surface course, or existing pavement not scheduled to be removed, with construction equipment which may damage the pavement.

d.The Contractor's attention is called to the fact that some quantities are given in both summary form and on the plan sheets. Care should be taken to avoid duplication of quantities.

GRASS LAKE ROAD SUMMARY OF QUANTITIES AND INDEX OF SCHEDULES

E	S	PAY CODE	DESCRIPTION	UNIT	QUANTITY	SCHEDULE #
	S	20200100	EARTH EXCAVATION	CU YD	14.0	1
	S	20200600	EXCAVATING AND GRADING EXISTING SHOULDER	UNIT	358.0	2
E	S	35101400	AGGREGATE BASE COURSE, TYPE B	TON	50.0	22
E	S	40201000	AGGREGATE FOR TEMPORARY ACCESS	TON	136.0	22
		40600275	BITUMINOUS MATERIALS (PRIME COAT)	LB	164244.0	12
E		40600400	MIXTURE FOR CRACKS, JOINTS, AND FLANGEWAYS	TON	5.0	22
E	S	40600525	LEVELING BINDER (HAND METHOD), N50	TON	5.0	22
	S	40600827	POLYMERIZED LEVELING BINDER (MACHINE METHOD), IL-4.75, N50	TON	2142.0	7
		40603080	HOT-MIX ASPHALT BINDER COURSE, IL-19.0, N50	TON	4012.0	9
		40603335	HOT-MIX ASPHALT SURFACE COURSE, MIX "D", N50	TON	6828.0	13
		44000100	PAVEMENT REMOVAL	SQ YD	483.0	11
	S	44000158	HOT-MIX ASPHALT SURFACE REMOVAL, 2 1/4"	SQ YD	58541.0	10
		44000200	DRIVEWAY PAVEMENT REMOVAL	SQ YD	4514.0	4
E		44004250	PAVED SHOULDER REMOVAL	SQ YD	100.0	22
E	S	44201725	CLASS D PATCHES, TYPE I, 7 INCH	SQ YD	276.0	22
E	S	44201729	CLASS D PATCHES, TYPE II, 7 INCH	SQ YD	414.0	22
E	S	44201733	CLASS D PATCHES, TYPE III, 7 INCH	SQ YD	1243.0	22
E	S	44201735	CLASS D PATCHES, TYPE IV, 7 INCH	SQ YD	829.0	22
	S	48101200	AGGREGATE SHOULDERS, TYPE B	TON	754.0	5
	S	48203021	HOT-MIX ASPHALT SHOULDERS, 6"	SQ YD	776.0	8
E		63000003	STEEL PLATE BEAM GUARDRAIL, TYPE A, 9 FOOT POSTS	FOOT	75.0	22
E		63200310	GUARDRAIL REMOVAL	FOOT	75.0	22
		67100100	MOBILIZATION	L SUM	1.0	
		70300100	SHORT TERM PAVEMENT MARKING	FOOT	20809.0	14
		70300210	TEMPORARY PAVEMENT MARKING - LETTERS AND SYMBOLS	SQ FT	182.0	15
		70300220	TEMPORARY PAVEMENT MARKING - LINE 4"	FOOT	31835.0	15
		70300230	TEMPORARY PAVEMENT MARKING - LINE 5"	FOOT	34022.0	15
		70300240	TEMPORARY PAVEMENT MARKING - LINE 6"	FOOT	1226.0	15
		70300260	TEMPORARY PAVEMENT MARKING - LINE 12"	FOOT	437.0	15
		70300520	PAVEMENT MARKING TAPE, TYPE III 4"	FOOT	4235.0	16
		70301000	WORK ZONE PAVEMENT MARKING REMOVAL	SQ FT	1537.0	17
	S	78000100	THERMOPLASTIC PAVEMENT MARKING - LETTERS AND SYMBOLS	SQ FT	182.0	18
	S	78000200	THERMOPLASTIC PAVEMENT MARKING - LINE 4"	FOOT	6350.0	18
	S	78000300	THERMOPLASTIC PAVEMENT MARKING - LINE 5"	FOOT	1936.0	18
	S	78000400	THERMOPLASTIC PAVEMENT MARKING - LINE 6"	FOOT	1226.0	18
	S	78000600	THERMOPLASTIC PAVEMENT MARKING - LINE 12"	FOOT	437.0	18
		78001110	PAINT PAVEMENT MARKING - LINE 4"	FOOT	25757.0	19
		78001120	PAINT PAVEMENT MARKING - LINE 5"	FOOT	32087.0	19
	S	78300200	RAISED REFLECTIVE PAVEMENT MARKER REMOVAL	EACH	346.0	21
	S	88600600	DETECTOR LOOP REPLACEMENT	FOOT	32.0	23
	S	LC600200	INSTALL SURVEY MONUMENTS	EACH	13.0	23
E	S	LC782000	GUARDRAIL REFLECTORS	EACH	4.0	22
	S	X4401198	HOT-MIX ASPHALT SURFACE REMOVAL, VARIABLE DEPTH	SQ YD	5813.0	3
E	S	X6030205	FRAMES AND GRATES TO BE ADJUSTED (SPECIAL)	EACH	3.0	23
	S	X6700405	ENGINEER'S FIELD OFFICE, TYPE A (MODIFIED)	CAL MO	3.0	23
	S	X7010216	TRAFFIC CONTROL AND PROTECTION, (SPECIAL)	L SUM	1.0	
	S	X7810300	RECESSED REFLECTIVE PAVEMENT MARKER	EACH	346.0	21
	S	XX006343	SEEDING (COMPLETE)	SQ YD	10762.0	20
	S	XX006729	PERIMETER EROSION BARRIER, ROLLED EXCELSIOR	FOOT	30.0	25
E		XX206400	MAILBOX POST (LCDOT)	EACH	3.0	22
	S	Z0042200	PORTLAND CEMENT CONCRETE PAVEMENT SURFACE REMOVAL	SQ YD	158.0	24

E ESTIMATED OR CONTINGENCY ITEM

S REQUIRES SPECIAL PROVISION

UTILITY CONTACTS

Legal Mandate Department Attn: Hector Garcia
AT&T Corp. (formerly SBC)
1000 Commerce Drive, Floor 1
Oak Brook, IL. 60523
Office: (847) 888-6799 Fax: (630) 573-5445
Cell: (630) 639-8372
E-mail: hg2929@att.com

Mr. Robert Schulter, Manager
Comcast
688 Industrial Drive
Elmhurst, IL 60126
Office: (630) 600-6347 Fax: (630) 600-6390
E-mail: bob_schulter@cable.comcast.com
Contact first Adm. Assistant: Martha Gieras
Office: (630) 600-6352
E-mail: martha_gieras@cable.comcast.com

Ms. Terri J. Bleck, Manager, Public Relocation Group - Northeast Region
ComEd
1500 Franklin Blvd.
Libertyville, IL 60048
Office: (847) 816-5239 Fax: (847) 816-5348
E-mail: terri.bleck@ComEd.com

Mr. Bruce Koppang, DOT Liaison
Nicor Gas, an AGL Resources Company
1844 Ferry Rd.
Naperville, IL 60563
Office: (630) 388-3046 Fax: (630) 983-4028 Mobile: (708) 243-5136
E-mail: bkoppan@aglresources.com

4 DRIVEWAY PAVEMENT REMOVAL

LOCATION	LEFT OR RIGHT	LENGTH (FEET)	WIDTH (FEET)	QUANTITY (SQ YD)
125+00.00	RT	24.8	16.2	44.5
125+65.00	RT	23.8	16.9	44.5
132+00.00	LT	118.8	23.0	303.4
134+19.00	LT	28.0	10.8	33.6
137+15.00	LT	29.8	15.8	52.0
146+00.00	RT	15.3	24.3	41.2
146+35.00	RT	26.6	15.7	46.3
146+68.00	RT	23.7	15.0	39.4
148+10.00	RT	13.4	20.9	31.1
154+50.00	RT	49.8	11.6	63.8
163+00.00	LT	47.2	13.5	70.4
175+10.00	RT	62.8	12.6	87.9
176+00.00	LT	38.1	17.5	73.8
178+00.00	RT	39.2	17.1	74.3
178+50.00	LT	92.1	12.8	130.4
179+50.00	RT	23.6	15.6	40.7
182+00.00	RT	19.4	20.1	43.3
184+05.00	RT	29.2	14.9	48.3
184+60.00	RT	27.4	15.5	47.1
184+95.00	LT	24.8	13.4	36.9
185+35.00	RT	23.3	17.5	45.3
186+00.00	RT	26.2	10.9	31.7
186+45.00	RT	30.9	12.7	43.6
186+97.00	LT	55.3	11.8	72.5
188+25.00	RT	11.1	17.4	21.4
191+05.00	RT	32.0	15.2	53.9
198+50.00	LT	21.1	21.3	49.8
200+56.00	RT	24.5	17.2	46.7
200+70.00	LT	32.6	18.7	67.7
202+10.00	RT	36.0	10.8	43.0
204+40.00	RT	25.8	11.4	32.6
212+90.00	RT	18.3	43.0	87.3
213+90.00	RT	22.2	23.8	58.5
214+75.00	RT	14.9	48.1	79.5
215+35.00	RT	18.3	18.3	37.2
216+45.00	RT	38.8	17.1	73.3
219+25.00	RT	36.5	15.2	61.5
222+10.00	RT	45.5	15.7	79.2
223+10.00	RT	62.7	16.2	112.3
226+50.00	RT	44.1	15.1	73.8
227+65.00	RT	20.8	25.4	58.7
228+00.00	LT	26.3	22.7	66.3
228+60.00	RT	15.5	33.7	58.0
230+10.00	RT	19.5	26.3	56.8
231+75.00	LT	21.7	25.1	60.3
231+78.00	RT	23.4	32.2	83.7
233+45.00	LT	22.7	31.8	80.0
233+45.00	RT	31.3	17.8	61.8
244+80.00	RT	45.1	20.7	103.6
245+75.00	RT	36.4	19.7	79.5
248+00.00	RT	188.5	14.4	300.7
255+75.00	RT	44.7	18.2	90.1
256+98.00	LT	31.8	20.3	71.4
258+95.00	LT	43.8	16.1	77.9
259+30.00	LT	70.9	8.5	66.9
261+00.00	LT	44.3	19.9	97.8
262+94.00	RT	28.9	24.7	79.0
267+40.00	LT	27.7	28.4	87.2
PAY CODE 44000200			SUBTOTAL	4103.4
			10 % CONTINGENCY	410.3
			TOTAL	4513.7

3 HOT-MIX ASPHALT SURFACE REMOVAL, VARIABLE DEPTH

FROM	TO	LT/RT	LENGTH (FEET)	AVG WIDTH (FEET)	AREA (SQ. FT.)	AREA (SQ. YDS.)
207+67.40	208+70.69	LT	103.29	14.3	1477.0	164.1
Stonegate Pl		RT	-	-	743.6	82.6
Lake Rd		LT	-	-	984.6	109.4
Ackerman Rd		RT	-	-	2391.3	265.7
Drexel Blvd		RT	-	-	2424.6	269.4
Springwill Ave		LT	-	-	951.3	105.7
Broadway Ave		RT	-	-	1854.9	206.1
Hillside Ave		LT	-	-	1109.7	123.3
Hermann Ave		RT	-	-	1202.4	133.6
Kathryn Dr		RT	-	-	927.0	103.0
Ravine Ave		LT	-	-	2274.3	252.7
Halings Rd		LT	-	-	1874.7	208.3
Grass Lake School (South)		RT	-	-	1866.6	207.4
Grass Lake School (North)		RT	-	-	1367.1	151.9
Lotus Rd		LT	-	-	871.2	96.8
Elm Tree Rd		LT	-	-	1104.3	122.7
Bluff Lake Rd		LT	-	-	3096.0	344.0
Rena Ave		RT	-	-	757.8	84.2
Bluff Lane (South)		LT	-	-	948.6	105.4
Bluff Lane (North)		LT	-	-	1483.2	164.8
Lupa's Marina		LT	-	-	2167.2	240.8
Bluff Dr		LT	-	-	962.1	106.9
Lakeshore Dr		LT	-	-	828.9	92.1
Spring Lake Marina		RT	-	-	2619.0	291.0
Sibley Dr		RT	-	-	978.3	108.7
North Lake Blvd		LT	-	-	2157.3	239.7
Sunset Dr		LT	-	-	3796.2	421.8
Fire Department		RT	-	-	2361.6	262.4
Trevino Ln		RT	-	-	943.2	104.8
Phillips 66 Gas Station		LT	-	-	1039.5	115.5
PAY CODE X4401198					SUBTOTAL	5284.8
					10% CONTINGENCY	528.5
					TOTAL	5813.3

23 MISCELLANEOUS ITEMS

PAY CODE	DESCRIPTION	UNIT	QUANTITY
LC600200	INSTALL SURVEY MONUMENTS	EACH	13
X6030205	FRAMES AND GRATES TO BE ADJUSTED (SPECIAL)	EACH	3
X6700405	ENGINEER'S FIELD OFFICE, TYPE A (MODIFIED)	CAL MO	3
88600600	DETECTOR LOOP REPLACEMENT	FOOT	32

24 PORTLAND CEMENT CONCRETE PAVEMENT REMOVAL

FROM	TO	LT/RT			AREA (SQ. YDS.)
252+29.94	252+49.94	LT/RT			86.5
253+85.94	254+05.94	CL			71.0

25 PERIMETER EROSION BARRIER, ROLLED EXCELSIOR

FROM	TO	LT/RT			AREA (SQ. YDS.)
223+38.29	223+66.85	LT			86.5

2 EXCAVATING AND GRADING EXISTING SHOULDER

FROM	TO	LEFT OR RIGHT	LENGTH (FEET)	QUANTITY (UNIT)
119+21.78	134+86.90	LT	1565.12	15.7
135+39.57	153+20.00	LT	1780.43	17.8
153+84.55	170+60.14	LT	1675.59	16.8
171+25.08	188+74.71	LT	1749.63	17.5
190+00.00	192+54.30	LT	254.30	2.5
193+96.62	202+12.52	LT	815.90	8.2
202+62.84	205+08.42	LT	245.58	2.5
205+92.22	207+69.36	LT	1927.82	19.3
208+82.79	225+20.04	LT	3254.69	32.5
226+05.33	241+37.48	LT	1532.15	15.3
242+39.73	246+56.80	LT	417.07	4.2
247+43.08	249+65.94	LT	222.86	2.2
250+93.84	252+49.91	LT	156.07	1.6
253+85.95	254+82.86	LT	96.91	1.0
255+15.18	264+10.37	LT	895.19	9.0
265+22.37	275+96.09	LT	1073.72	10.7
278+05.95	289+24.12	LT	1118.17	11.2
119+21.78	122+98.04	RT	376.26	3.8
123+48.87	143+53.33	RT	2004.46	20.0
145+27.19	151+31.17	RT	603.98	6.0
153+62.74	166+75.32	RT	1312.58	13.1
167+87.65	170+50.00	RT	262.35	2.6
171+25.08	188+73.83	RT	1748.75	17.5
189+29.53	193+70.18	RT	440.65	4.4
195+16.66	196+83.22	RT	166.56	1.7
197+70.29	238+45.57	RT	4075.28	40.8
238+75.11	252+49.91	RT	1374.80	13.7
253+85.95	258+06.96	RT	421.01	4.2
259+09.19	261+41.06	RT	231.87	2.3
261+89.51	280+47.67	RT	1858.16	18.6
281+40.33	285+97.78	RT	457.45	4.6
PAY CODE 20200600			SUBTOTAL	341.2
			5% CONTINGENCY	17.1
			TOTAL	358.3

1 EARTH EXCAVATION

STATION	DISTANCE FT	CUT AREA SQ FT	CUT AVG AREA SQ FT	CUT VOLUME CU YD	FILL AREA SQ FT	FILL AVG AREA SQ FT	FILL VOLUME CU YD
223+00.00		0.00			0.00		
	50.00		0.00	0.00		1.04	1.93
223+50.00		0.00			2.08		
	50.00		0.82	1.51		2.07	3.82
224+00.00		1.63			2.05		
	50.00		2.61	4.82		1.80	3.33
224+50.00		3.58			1.55		
	50.00		3.40	6.30		1.16	2.14
225+00.00		3.22			0.76		
	25.00		1.61	1.49		0.38	0.35
225+25.00		0.00			0.00		
			TOTAL (CY):	14.12		SUBTOTAL (CY):	11.57
						.15 COMP. FACTOR:	1.74
						TOTAL (CY):	13.31
PAY CODE 20200100						SUBTOTAL	14.12
						EARTH EXCAVATION (CY):	14.12

REVISIONS / REMARKS					
NO.	DESCRIPTION	DATE	BY	SURVEYOR:	/
1	Schedule 34	06/04/14		DSGNR/LIAISON:	
		/ /		PLOTTED BY:	hdmxb 6/3/2015

GRASS LAKE ROAD RESURFACING

LakeCounty Division of Transportation

SCHEDULE OF QUANTITIES

GRASS LAKE ROAD

ROUTE	SECTION	SECTION NUMBER	SHEET	SHEETS
CH18	59	14-00059-09-RS	5	85

FILE NAME: U:\Design\Burke\14-00059-09-RS Grass Lake Road Resurfacing\Grass Lake Rd Resurfacing (E of Bridge to IL Rt 59)\Grass Lake Working files\14-00059-09-RS master.dgn

5 AGGREGATE SHOULDERS, TYPE B

FROM	TO	LEFT OR RIGHT	LENGTH (FEET)	WIDTH (FEET)	DEPTH (INCHES)	VOLUME (CU YD)	WEIGHT (TONS)
119+21.78	131+44.25	LT	1222.5	2.0	2.0	15.1	30.2
132+53.64	134+08.03	LT	154.4	2.0	2.0	1.9	3.8
134+29.99	134+86.90	LT	56.9	2.0	2.0	0.7	1.4
135+39.57	137+01.93	LT	162.4	2.0	2.0	2.0	4.0
137+23.46	153+20.00	LT	1596.5	2.0	2.0	19.7	39.4
153+84.55	162+83.18	LT	898.6	2.0	2.0	11.1	22.2
163+18.66	170+60.14	LT	741.5	2.0	2.0	9.2	18.3
171+25.08	175+86.33	LT	461.3	2.0	2.0	5.7	11.4
176+14.85	178+22.52	LT	207.7	2.0	2.0	2.6	5.1
179+03.31	184+84.28	LT	581.0	2.0	2.0	7.2	14.3
185+00.44	186+77.07	LT	176.6	2.0	2.0	2.2	4.4
190+00.00	192+54.30	LT	254.3	2.0	2.0	3.1	6.3
193+96.62	198+40.64	LT	444.0	2.0	2.0	5.5	11.0
198+56.14	200+62.94	LT	206.8	2.0	2.0	2.6	5.1
200+89.15	202+12.52	LT	123.4	2.0	2.0	1.5	3.0
202+62.84	205+08.42	LT	245.6	2.0	2.0	3.0	6.1
205+92.22	208+03.11	LT	210.9	2.0	2.0	2.6	5.2
208+82.79	219+37.55	LT	1054.8	2.0	2.0	13.0	26.0
225+99.75	227+90.11	LT	190.4	2.0	2.0	2.4	4.7
228+10.69	231+68.19	LT	357.5	2.0	2.0	4.4	8.8
231+85.30	233+31.74	LT	146.4	2.0	2.0	1.8	3.6
233+53.12	241+37.48	LT	784.4	2.0	2.0	9.7	19.4
242+39.73	246+56.80	LT	417.1	2.0	2.0	5.1	10.3
247+43.08	249+65.94	LT	222.9	2.0	2.0	2.8	5.5
250+93.84	251+90.00	LT	96.2	2.0	2.0	1.2	2.4
257+09.63	258+82.43	LT	172.8	2.0	2.0	2.1	4.3
259+08.25	259+21.01	LT	12.8	2.0	2.0	0.2	0.3
259+39.60	260+84.27	LT	144.7	2.0	2.0	1.8	3.6
261+18.55	264+10.37	LT	291.8	2.0	2.0	3.6	7.2
265+22.37	267+27.22	LT	204.9	2.0	2.0	2.5	5.1
267+45.58	275+96.09	LT	850.5	2.0	2.0	10.5	21.0
278+05.95	289+24.12	LT	1118.2	2.0	2.0	13.8	27.6
119+21.78	122+98.04	RT	376.3	2.0	2.0	4.6	9.3
123+48.87	124+91.66	RT	142.8	2.0	2.0	1.8	3.5
125+09.39	125+51.17	RT	41.8	2.0	2.0	0.5	1.0
125+68.99	143+53.33	RT	1784.3	2.0	2.0	22.0	44.1
145+27.19	145+90.26	RT	63.1	2.0	2.0	0.8	1.6
146+04.62	146+22.08	RT	17.5	2.0	2.0	0.2	0.4
146+39.75	146+63.29	RT	23.5	2.0	2.0	0.3	0.6
146+77.35	148+08.78	RT	131.4	2.0	2.0	1.6	3.2
148+18.95	151+31.17	RT	312.2	2.0	2.0	3.9	7.7
153+62.74	154+21.04	RT	58.3	2.0	2.0	0.7	1.4
154+63.25	166+75.32	RT	1212.1	2.0	2.0	15.0	29.9
167+87.65	170+50.00	RT	262.3	2.0	2.0	3.2	6.5
171+25.08	174+86.95	RT	361.9	2.0	2.0	4.5	8.9
175+33.44	177+77.32	RT	243.9	2.0	2.0	3.0	6.0
178+10.34	179+43.42	RT	133.1	2.0	2.0	1.6	3.3
179+63.07	181+87.83	RT	224.8	2.0	2.0	2.8	5.5
182+04.40	183+94.54	RT	190.1	2.0	2.0	2.3	4.7
184+20.00	184+52.26	RT	32.3	2.0	2.0	0.4	0.8
184+76.12	185+20.38	RT	44.3	2.0	2.0	0.5	1.1
185+43.70	185+91.44	RT	47.7	2.0	2.0	0.6	1.2
186+54.91	188+23.60	RT	168.7	2.0	2.0	2.1	4.2
188+30.96	188+73.83	RT	42.9	2.0	2.0	0.5	1.1
189+29.53	190+95.16	RT	165.6	2.0	2.0	2.0	4.1
191+16.34	193+70.18	RT	253.8	2.0	2.0	3.1	6.3
195+16.66	196+83.22	RT	166.6	2.0	2.0	2.1	4.1
197+70.29	200+51.59	RT	281.3	2.0	2.0	3.5	6.9
200+68.87	201+98.20	RT	129.3	2.0	2.0	1.6	3.2
202+28.40	204+29.34	RT	200.9	2.0	2.0	2.5	5.0
204+49.37	212+79.61	RT	830.2	2.0	2.0	10.2	20.5
212+97.96	213+72.58	RT	74.6	2.0	2.0	0.9	1.8
213+95.00	214+71.73	RT	76.7	2.0	2.0	0.9	1.9
214+85.93	215+28.95	RT	43.0	2.0	2.0	0.5	1.1
215+43.33	216+30.21	RT	86.9	2.0	2.0	1.1	2.1
216+58.87	219+16.31	RT	257.4	2.0	2.0	3.2	6.4
219+42.76	221+89.89	RT	247.1	2.0	2.0	3.1	6.1
222+27.50	222+86.98	RT	59.5	2.0	2.0	0.7	1.5
223+37.96	226+11.02	RT	273.1	2.0	2.0	3.4	6.7
226+63.91	227+59.87	RT	96.0	2.0	2.0	1.2	2.4
227+77.87	228+60.25	RT	82.4	2.0	2.0	1.0	2.0
228+75.10	230+03.04	RT	127.9	2.0	2.0	1.6	3.2
230+15.96	231+68.84	RT	152.9	2.0	2.0	1.9	3.8
231+91.40	233+37.83	RT	146.4	2.0	2.0	1.8	3.6
233+75.86	238+45.57	RT	469.7	2.0	2.0	5.8	11.6
238+75.11	244+65.94	RT	590.8	2.0	2.0	7.3	14.6
244+99.75	245+84.02	RT	84.3	2.0	2.0	1.0	2.1
245+84.02	247+19.90	RT	135.9	2.0	2.0	1.7	3.4
248+93.79	250+28.19	RT	134.4	2.0	2.0	1.7	3.3
254+36.94	255+60.63	RT	123.7	2.0	2.0	1.5	3.1
255+95.95	258+06.96	RT	211.0	2.0	2.0	2.6	5.2
259+09.19	261+41.06	RT	231.9	2.0	2.0	2.9	5.7
261+89.51	262+85.81	RT	96.3	2.0	2.0	1.2	2.4
263+06.94	280+47.67	RT	1740.7	2.0	2.0	21.5	43.0
281+40.33	286+01.18	RT	460.8	2.0	2.0	5.7	11.4
PAY CODE 48101200 (2 Tons/Cubic Yard)						SUBTOTAL	685.3
						10 % CONTINGENCY	68.5
						TOTAL	753.9

9 HOT-MIX ASPHALT BINDER COURSE, IL-19.0, N50

FROM	TO	LEFT OR RIGHT	LENGTH (FEET)	WIDTH (FEET)	AREA (SY)	DEPTH (INCH)	QUANTITY (TONS)
119+21.78	134+86.90	LT	1565.1	4.0	695.6	4.5	175.3
135+39.57	153+20.00	LT	1780.4	4.0	791.3	4.5	199.4
153+84.55	170+60.14	LT	1675.6	4.0	744.7	4.5	187.7
171+25.08	188+74.71	LT	1749.6	4.0	777.6	4.5	196.0
190+00.00	192+54.30	LT	254.3	4.0	113.0	4.5	28.5
193+96.62	202+12.52	LT	815.9	4.0	362.6	4.5	91.4
202+62.84	205+08.42	LT	245.6	4.0	109.1	4.5	27.5
205+92.22	207+69.36	LT	1927.8	4.0	856.8	4.5	215.9
208+82.79	225+20.04	LT	3254.7	4.0	1446.5	4.5	364.5
226+05.33	241+37.48	LT	1532.2	4.0	681.0	4.5	171.6
242+39.73	246+56.80	LT	417.1	4.0	185.4	4.5	46.7
247+43.08	249+65.94	LT	222.9	4.0	99.0	4.5	25.0
250+93.84	252+49.91	LT	156.1	4.0	69.4	4.5	17.5
253+85.95	254+82.86	LT	96.9	4.0	43.1	4.5	10.9
255+15.18	264+10.37	LT	895.2	4.0	397.9	4.5	100.3
265+22.37	275+96.09	LT	1073.7	4.0	477.2	4.5	120.3
278+05.95	289+24.12	LT	1118.2	4.0	497.0	4.5	125.2
119+21.78	122+98.04	RT	376.3	4.0	167.2	4.5	42.1
123+48.87	143+53.33	RT	2004.5	4.0	890.9	4.5	224.5
145+27.19	151+31.17	RT	604.0	4.0	268.4	4.5	67.6
153+62.74	166+75.32	RT	1312.6	4.0	583.4	4.5	147.0
167+87.65	170+50.00	RT	262.3	4.0	116.6	4.5	29.4
171+25.08	188+73.83	RT	1748.8	4.0	777.2	4.5	195.9
189+29.53	193+70.18	RT	440.7	4.0	195.8	4.5	49.4
195+16.66	196+83.22	RT	166.6	4.0	74.0	4.5	18.7
197+70.29	238+45.57	RT	4075.3	4.0	1811.2	4.5	456.4
238+75.11	252+49.91	RT	1374.8	4.0	611.0	4.5	154.0
253+85.95	258+06.96	RT	421.0	4.0	187.1	4.5	47.2
259+09.19	261+41.06	RT	231.9	4.0	103.1	4.5	26.0
261+89.51	280+47.67	RT	1858.2	4.0	825.8	4.5	208.1
281+40.33	285+97.78	RT	457.4	4.0	203.3	4.5	51.2
PAY CODE 40603080						SUBTOTAL	3820.9
						5% CONTINGENCY	191.0
						TOTAL	4011.9

8 HOT-MIX ASPHALT SHOULDERS, 6"

FROM	TO	LEFT OR RIGHT	LENGTH (FEET)	WIDTH (FEET)	QUANTITY (SQ YD)
219+45.48	222+48.71	LT	303.2	8.0	269.5
253+85.95	254+82.86	LT	96.9	8.0	86.1
255+15.18	256+87.12	LT	171.9	8.0	152.8
250+56.46	252+50.00	RT	193.5	8.0	172.0
253+85.95	254+14.43	RT	28.5	8.0	25.3
PAY CODE 48203021				SUBTOTAL	705.9
				10 % CONTINGENCY	70.6
				TOTAL	776.5

12 BITUMINOUS MATERIALS (PRIME COAT)

Area from Poly. Leveling Binder (Machine Method)		49444.7
Area from Hot-Mix Asphalt Surface Course		74405.6
	TOTAL AREA (SQ. YDS.)	123850.3
PRIME TYPE SS-1 @ 1.263 LBS./SQ. YD.		
PAY CODE 40600275	PRIME QUANTITY (LB.)	156422.9
	5% CONTINGENCY	7821.1
	TOTAL PRIME (LB.)	164244.1

13 HOT-MIX ASPHALT SURFACE COURSE, MIX "D", N70

FROM	TO	LEFT OR RIGHT	LENGTH (FEET)	AVERAGE WIDTH (FEET)	DEPTH (INCHES)	AREA TO BE PRIMED (SQ. YDS.)	QUANTITY (TONS)
MAINLINE							
119+21.78	202+65.20	LT/RT	8343.4	24.0	1.50	22249.1	1868.9
202+67.20	214+84.75	LT/RT	1217.6	36.0	1.50	5288.9	444.3
214+84.75	235+15.61	LT/RT	2030.9	24.0	1.50	5415.6	454.9
235+15.61	242+39.41	LT/RT	723.8	36.0	1.50	2916.8	245.0
242+39.41	252+49.61	LT/RT	1010.2	24.0	1.50	2693.9	226.3
253+85.90	281+78.21	LT/RT	2792.3	24.0	1.50	7446.2	625.5
281+78.21	290+02.80	LT/RT	824.6	48.0	1.50	3434.2	288.5
4 FOOT BITUMINOUS SHOULDER							
119+21.78	289+24.12	LT	18781.2	4.0	1.5	8347.2	701.2
119+21.78	285+97.78	RT	15334.2	4.0	1.5	6815.2	572.5
SIDE ROADS							
207+67.40	208+70.69	LT	-	-	1.5	164.1	13.8
Stonegate Pl		RT	-	-	1.5	82.6	6.9
Lake Rd		LT	-	-	1.5	109.4	9.2
Ackerman Rd		RT	-	-	1.5	265.7	22.3
Drexel Blvd		RT	-	-	1.5	269.4	22.6
Springwill Ave		LT	-	-	1.5	105.7	8.9
Broadway Ave		RT	-	-	1.5	206.1	17.3
Hillside Ave		LT	-	-	1.5	123.3	10.4
Hermann Ave		RT	-	-	1.5	133.6	11.2
Kathryn Dr		RT	-	-	1.5	103.0	8.7
Ravine Ave		LT	-	-	1.5	252.7	21.2
Halings Rd		LT	-	-	1.5	208.3	17.5
Grass Lake School (South)		RT	-	-	1.5	207.4	17.4
Grass Lake School (North)		RT	-	-	1.5	151.9	12.8
Lotus Rd		LT	-	-	1.5	96.8	8.1
Elm Tree Rd		LT	-	-	1.5	122.7	10.3
Bluff Lake Rd		LT	-	-	1.5	344.0	28.9
Rena Ave		RT	-	-	1.5	84.2	7.1
Bluff Lane (South)		LT	-	-	1.5	105.4	8.9
Bluff Lane (North)		LT	-	-	1.5	164.8	13.8
Lupa's Marina		LT	-	-	1.5	240.8	20.2
Bluff Dr		LT	-	-	1.5	106.9	9.0
Lakeshore Dr		LT	-	-	1.5	92.1	7.7
Spring Lake Marina		RT	-	-	1.5	291.0	24.4
Sibley Dr		RT	-	-	1.5	108.7	9.1
North Lake Blvd		LT	-	-	1.5	239.7	20.1
Sunset Dr		LT	-	-	1.5	421.8	35.4
Fire Department		RT	-	-	1.5	262.4	22.0
Trevino Ln		RT	-	-	1.5	104.8	8.8
Phillips 66 Gas Station		LT	-	-	1.5	115.5	9.7
DRIVEWAYS							
Driveways		LT/RT	-	-	2.5	4513.7	631.9
PAY CODE 40603340 (112 lbs./Sq. Yd./1" Depth)				SUBTOTAL		74405.6	6502.8
				5% CONTINGENCY		3720.3	325.1
				TOTAL		78125.9	6828.0

REVISIONS / REMARKS					
NO.	DESCRIPTION	DATE	BY	SURVEYOR:	/
1	Schedule 34	06/04/14		DSGNR/LIAISON:	
		/ /		PLOTTED BY:	hdmxb 5/28/2015

GRASS LAKE ROAD RESURFACING

LakeCounty Division of Transportation

SCHEDULE OF QUANTITIES

GRASS LAKE ROAD

ROUTE	SECTION	SECTION NUMBER	SHEET	SHEETS
CH18	59	14-00059-09-RS	6	85

FILE NAME: U:\Design\Burke\14-00059-09-RS Grass Lake Road Resurfacing\Grass Lake Rd Resurfacing (E of Bridge to IL Rt 59)\Grass Lake Working files\14-00059-09-RS master.dgn

9 HOT-MIX ASPHALT BINDER COURSE, IL-19.0, N50

FROM	TO	LEFT OR RIGHT	LENGTH (FEET)	WIDTH (FEET)	AREA (SY)	DEPTH (INCH)	QUANTITY (TONS)
119+21.78	134+86.90	LT	1565.1	4.0	695.6	4.5	175.3
135+39.57	153+20.00	LT	1780.4	4.0	791.3	4.5	199.4
153+84.55	170+60.14	LT	1675.6	4.0	744.7	4.5	187.7
171+25.08	188+74.71	LT	1749.6	4.0	777.6	4.5	196.0
190+00.00	192+54.30	LT	254.3	4.0	113.0	4.5	28.5
193+96.62	202+12.52	LT	815.9	4.0	362.6	4.5	91.4
202+62.84	205+08.42	LT	245.6	4.0	109.1	4.5	27.5
205+92.22	207+69.36	LT	1927.8	4.0	856.8	4.5	215.9
208+82.79	225+20.04	LT	3254.7	4.0	1446.5	4.5	364.5
226+05.33	241+37.48	LT	1532.2	4.0	681.0	4.5	171.6
242+39.73	246+56.80	LT	417.1	4.0	185.4	4.5	46.7
247+43.08	249+65.94	LT	222.9	4.0	99.0	4.5	25.0
250+93.84	252+49.91	LT	156.1	4.0	69.4	4.5	17.5
253+85.95	254+82.86	LT	96.9	4.0	43.1	4.5	10.9
255+15.18	264+10.37	LT	895.2	4.0	397.9	4.5	100.3
265+22.37	275+96.09	LT	1073.7	4.0	477.2	4.5	120.3
278+05.95	289+24.12	LT	1118.2	4.0	497.0	4.5	125.2
119+21.78	122+98.04	RT	376.3	4.0	167.2	4.5	42.1
123+48.87	143+53.33	RT	2004.5	4.0	890.9	4.5	224.5
145+27.19	151+31.17	RT	604.0	4.0	268.4	4.5	67.6
153+62.74	166+75.32	RT	1312.6	4.0	583.4	4.5	147.0
167+87.65	170+50.00	RT	262.3	4.0	116.6	4.5	29.4
171+25.08	188+73.83	RT	1748.8	4.0	777.2	4.5	195.9
189+29.53	193+70.18	RT	440.7	4.0	195.8	4.5	49.4
195+16.66	196+83.22	RT	166.6	4.0	74.0	4.5	18.7
197+70.29	238+45.57	RT	4075.3	4.0	1811.2	4.5	456.4
238+75.11	252+49.91	RT	1374.8	4.0	611.0	4.5	154.0
253+85.95	258+06.96	RT	421.0	4.0	187.1	4.5	47.2
259+09.19	261+41.06	RT	231.9	4.0	103.1	4.5	26.0
261+89.51	280+47.67	RT	1858.2	4.0	825.8	4.5	208.1
281+40.33	285+97.78	RT	457.4	4.0	203.3	4.5	51.2
PAY CODE 40603080						SUBTOTAL	3820.9
						5% CONTINGENCY	191.0
						TOTAL	4011.9

7 POLYMERIZED LEVELING BINDER (MACHINE METHOD), IL-4.75, N50

FROM	TO	LEFT OR RIGHT	LENGTH (FEET)	AVERAGE WIDTH (FEET)	DEPTH (INCHES)	AREA TO BE PRIMED (SQ. YDS.)	QUANTITY (TONS)
MAINLINE							
119+21.78	202+65.20	LT/RT	8343.4	24.0	0.75	22249.1	934.5
202+67.20	214+84.75	LT/RT	1217.6	36.0	0.75	5288.9	222.1
214+84.75	235+15.61	LT/RT	2030.9	24.0	0.75	5415.6	227.5
235+15.61	242+39.41	LT/RT	723.8	36.0	0.75	2916.8	122.5
242+39.41	252+49.61	LT/RT	1010.2	24.0	0.75	2693.9	113.1
253+85.90	281+78.21	LT/RT	2792.3	24.0	0.75	7446.2	312.7
281+78.21	290+02.80	LT/RT	824.6	48.0	0.75	3434.2	144.2
PAY CODE 40600827 (112 lbs./Sq. Yd./1" Depth)					SUBTOTAL	49444.7	2076.7
					5% CONTINGENCY	2472.2	103.8
					TOTAL	51916.9	2180.5

14 SHORT TERM PAVEMENT MARKIING

LETTERS & SYMBOLS

FROM	TO	LEFT OR RIGHT	LENGTH (FEET)	DESCRIPTION	QUANTITY (FEET)
216+02.88	216+34.88	C/L	32.0	LEFT TURN ONLY	109.0
199+76.10	200+08.10	LT	32.0	LEFT TURN ONLY	109.0
247+15.05	247+47.05	RT	32.0	LEFT TURN ONLY	109.0
287+82.12	288+14.12	C/L	32.0	LEFT TURN ONLY	109.0
289+23.53	289+55.53	C/L	32.0	LEFT TURN ONLY	109.0
				TOTAL 1 APPLICATION	545.0
				TOTAL 4 APPLICATIONS	2180.0

4" DOUBLE YELLOW LINE, 4' DASH 40' SKIP = LENGTH X 0.20

FROM	TO	LEFT OR RIGHT	LENGTH (FEET)	DESCRIPTION	QUANTITY (FEET)
119+21.78	123+07.48	C/L	385.7	DOUBLE YELLOW C/L	77.1
123+35.69	134+91.95	C/L	1156.3	DOUBLE YELLOW C/L	231.3
135+41.28	143+64.18	C/L	822.9	DOUBLE YELLOW C/L	164.6
144+17.86	152+71.48	C/L	853.6	DOUBLE YELLOW C/L	170.7
153+62.74	166+81.06	C/L	1318.3	DOUBLE YELLOW C/L	263.7
167+83.18	170+72.42	C/L	289.2	DOUBLE YELLOW C/L	57.8
171+07.71	188+81.18	C/L	1773.5	DOUBLE YELLOW C/L	354.7
189+22.82	189+39.32	C/L	16.5	DOUBLE YELLOW C/L	3.3
189+97.36	193+29.04	C/L	331.7	DOUBLE YELLOW C/L	66.3
193+86.90	193+98.84	C/L	11.9	DOUBLE YELLOW C/L	2.4
194+75.18	196+92.32	C/L	217.1	DOUBLE YELLOW C/L	43.4
197+21.90	202+65.20	C/L	543.3	DOUBLE YELLOW C/L	108.7
202+65.20	205+19.97	RT	258.8	MEDIAN	51.8
202+65.20	205+19.97	LT	257.8	MEDIAN	51.6
206+02.86	207+90.17	C/L	187.3	DOUBLE YELLOW C/L	37.5
208+68.19	214+84.25	RT	619.8	MEDIAN	124.0
208+68.19	214+84.25	LT	619.4	MEDIAN	123.9
214+84.25	225+19.55	C/L	1035.3	DOUBLE YELLOW C/L	207.1
226+21.67	238+28.55	C/L	1206.9	DOUBLE YELLOW C/L	241.4
239+13.11	251+89.57	C/L	1276.5	DOUBLE YELLOW C/L	255.3
252+39.61	252+49.94	C/L	236.1	DOUBLE YELLOW C/L	47.2
253+85.94	254+75.70	C/L	758.1	DOUBLE YELLOW C/L	151.6
255+29.39	261+44.00	C/L	614.6	DOUBLE YELLOW C/L	122.9
261+96.26	264+30.52	C/L	234.3	DOUBLE YELLOW C/L	46.9
264+71.41	264+89.79	C/L	18.4	DOUBLE YELLOW C/L	3.7
265+23.92	276+45.64	C/L	1121.7	DOUBLE YELLOW C/L	224.3
277+03.03	281+78.21	C/L	475.2	DOUBLE YELLOW C/L	95.0
281+78.21	287+72.27	RT	594.6	MEDIAN	118.9
281+78.21	287+72.27	LT	594.1	MEDIAN	118.8
287+72.27	290+02.82	C/L	230.5	DOUBLE YELLOW C/L	46.1
				TOTAL 1 APPLICATION	3611.9
				TOTAL 4 APPLICATIONS	14447.5

4" SOLID WHITE LINE

FROM	TO	LEFT OR RIGHT	LENGTH (FEET)	DESCRIPTION	QUANTITY (FEET)
206+02.88	207+90.17	RT	186.7	TURN LANE	186.7
208+70.69	210+08.10	LT	138.7	TURN LANE	138.7
237+15.05	238+28.55	RT	113.5	TURN LANE	113.5
237+77.45	240+63.88	LT	286.4	TURN LANE	286.4
287+72.12	290+02.80	RT	230.7	TURN LANE	230.7
289+13.53	290+02.80	RT	89.3	TURN LANE	89.3
				TOTAL 1 APPLICATION	1045.3
				TOTAL 4 APPLICATIONS	4181.1
PAY CODE 70300100				COMPOSITE TOTAL	20808.6

11 PAVEMENT REMOVAL

FROM	TO	LEFT OR RIGHT		QUANTITY (SQ YD)
223+00.00	225+00.00	LT		439.0
PAY CODE 44000100			SUBTOTAL	439.0
			10 % CONTINGENCY	43.9
			TOTAL	482.9

*SEE DRAINAGE DITCHING PLAN SHEET

10 HOT-MIX ASPHALT SURFACE REMOVAL 2 1/4"

FROM	TO	LT/RT	LENGTH (FEET)	AVG. WIDTH (FEET)	AREA (SQ. FT.)	AREA (SQ. YDS.)
MAINLINE - LEFT						
119+21.78	202+65.20	LT/RT	8343.4		227358.8	25262.1
202+65.20	214+84.75	LT/RT	1219.6		50575.5	5619.5
214+84.75	235+15.61	LT/RT	2030.9		51767.1	5751.9
235+15.61	242+39.41	LT/RT	723.8		26320.3	2924.5
242+39.41	252+49.61	LT/RT	1010.2		23741.3	2637.9
253+85.90	281+78.21	LT/RT	2792.3		66468.2	7385.4
281+78.21	290+02.80	LT/RT	824.6		32738.9	3637.7
PAY CODE 44000158				SUBTOTAL		53218.9
				10% CONTINGENCY		5321.9
				TOTAL		58540.8

17 WORK ZONE PAVEMENT MARKING REMOVAL

	LENGTH (FEET)	WIDTH (FEET)	AREA (SQ FT)
PAVEMENT MARKING TAPE, TYPE III 4" (SCHEDULE 20)	4234.6	0.33	1397.4
PAY CODE 70301000		SUBTOTAL	1397.4
		10% CONTINGENCY	139.7
		TOTAL	1537.2

12 BITUMINOUS MATERIALS (PRIME COAT)

Area from Poly. Leveling Binder (Machine Method)		49444.7
Area from Hot-Mix Asphalt Surface Course		74405.6
	TOTAL AREA (SQ. YDS.)	123850.3
PRIME TYPE SS-1 @ 1.263 LBS./SQ. YD.		
PAY CODE 40600275	PRIME QUANTITY (LB.)	156422.9
	5% CONTINGENCY	7821.1
	TOTAL PRIME (LB.)	164244.1

8 HOT-MIX ASPHALT SHOULDERS, 6"

FROM	TO	LEFT OR RIGHT	LENGTH (FEET)	WIDTH (FEET)	QUANTITY (SQ YD)
219+45.48	222+48.71	LT	303.2	8.0	269.5
253+85.95	254+82.86	LT	96.9	8.0	86.1
255+15.18	256+87.12	LT	171.9	8.0	152.8
250+56.46	252+50.00	RT	193.5	8.0	172.0
253+85.95	254+14.43	RT	28.5	8.0	25.3
PAY CODE 48203021				SUBTOTAL	705.9
				10 % CONTINGENCY	70.6
				TOTAL	776.5

REVISIONS / REMARKS					
NO.	DESCRIPTION	DATE	BY	SURVEYOR:	/
1	Schedule 34	06/04/14		DSGNR/LIAISON:	
		/ /		PLOTTED BY:	hdmxb 6/2/2015

GRASS LAKE ROAD RESURFACING

LakeCounty Division of Transportation

SCHEDULE OF QUANTITIES

GRASS LAKE ROAD

ROUTE	SECTION	SECTION NUMBER	SHEET	SHEETS
CH18	59	14-00059-09-RS	7	85

FILE NAME: U:\Design\Burke\14-00059-09-RS Grass Lake Road Resurfacing\Grass Lake Rd Resurfacing (E of Bridge to IL Rt 59)\Grass Lake Working files\14-00059-09-RS master.dgn

15 TEMPORARY PAVEMENT MARKING

LETTERS & SYMBOLS - WHITE

FROM	TO	LEFT OR RIGHT	LENGTH (FEET)	DESCRIPTION	QUANTITY (SQ FT)
216+02.88	216+34.88	C/L	32.0	LEFT TURN ONLY	36.4
199+76.10	200+08.10	LT	32.0	LEFT TURN ONLY	36.4
247+15.05	247+47.05	RT	32.0	LEFT TURN ARROW	36.4
287+82.12	288+14.12	C/L	32.0	DUAL LEFTS	36.4
289+23.53	289+55.53	C/L	32.0	DUAL LEFTS	36.4
PAY CODE 70300210				TOTAL 1 APPLICATION	182.0

4" DOUBLE SOLID YELLOW LINE = LENGTH X 2

FROM	TO	LEFT OR RIGHT	LENGTH (FEET)	DESCRIPTION	QUANTITY (FEET)
119+21.78	123+07.48	C/L	385.7	DOUBLE YELLOW C/L	771.4
123+35.69	134+91.95	C/L	1156.3	DOUBLE YELLOW C/L	2312.5
135+41.28	143+64.18	C/L	822.9	DOUBLE YELLOW C/L	1645.8
144+17.86	152+71.48	C/L	853.6	DOUBLE YELLOW C/L	1707.2
153+62.74	166+81.06	C/L	1318.3	DOUBLE YELLOW C/L	2636.6
167+83.18	170+72.42	C/L	289.2	DOUBLE YELLOW C/L	578.5
171+07.71	188+81.18	C/L	1773.5	DOUBLE YELLOW C/L	3546.9
189+22.82	189+39.32	C/L	16.5	DOUBLE YELLOW C/L	33.0
189+97.36	193+29.04	C/L	331.7	DOUBLE YELLOW C/L	663.4
193+86.90	193+98.84	C/L	11.9	DOUBLE YELLOW C/L	23.9
194+75.18	196+92.32	C/L	217.1	DOUBLE YELLOW C/L	434.3
197+21.90	202+65.20	C/L	543.3	DOUBLE YELLOW C/L	1086.6
202+65.20	205+19.97	RT	258.8	MEDIAN	517.6
202+65.20	205+19.97	LT	257.8	MEDIAN	515.6
206+02.86	207+90.17	C/L	187.3	DOUBLE YELLOW C/L	374.6
208+68.19	214+84.25	RT	619.8	MEDIAN	1239.6
208+68.19	214+84.25	LT	619.4	MEDIAN	1238.8
214+84.25	225+19.55	C/L	1035.3	DOUBLE YELLOW C/L	2070.6
226+21.67	226+77.46	C/L	55.8	DOUBLE YELLOW C/L	111.6
247+26.29	251+89.57	C/L	463.3	DOUBLE YELLOW C/L	926.6
252+39.61	252+49.94	C/L	10.3	DOUBLE YELLOW C/L	20.7
253+85.94	254+75.70	C/L	89.8	DOUBLE YELLOW C/L	179.5
255+29.39	261+44.00	C/L	614.6	DOUBLE YELLOW C/L	1229.2
261+96.26	264+30.52	C/L	234.3	DOUBLE YELLOW C/L	468.5
264+71.41	264+89.79	C/L	18.4	DOUBLE YELLOW C/L	36.8
265+23.92	276+45.64	C/L	1121.7	DOUBLE YELLOW C/L	2243.4
277+03.03	281+78.21	C/L	475.2	DOUBLE YELLOW C/L	950.4
281+78.21	287+72.27	RT	594.6	MEDIAN	1189.2
281+78.21	287+72.27	LT	594.1	MEDIAN	1188.1
287+72.27	290+02.82	C/L	230.5	DOUBLE YELLOW C/L	461.1

4" YELLOW LINE - SOLID/10-30 SKIP = LENGTH X 1.25

226+77.46	234+33.11	C/L	755.7	SOLID/10-30 SKIP	944.6
245+40.40	247+26.29	C/L	185.9	SOLID/10-30 SKIP	232.4

4" YELLOW LINE - SOLID/10-30 SKIP = LENGTH X 0.25

234+33.11	238+28.55	C/L	395.4	SOLID/10-30 SKIP	98.9
239+13.11	245+40.40	C/L	627.3	SOLID/10-30 SKIP	156.8
PAY CODE 70300220				TOTAL 1 APPLICATION	31834.6

5" SOLID WHITE LINE (FEET)

FROM	TO	LEFT OR RIGHT	LENGTH (FEET)	DESCRIPTION	QUANTITY (FEET)
SE Quad @ Stonegate Pl		RT	51.2	EDGE LINE @ RETURN	51.2
NE Quad @ Stonegate Pl		RT	35.2	EDGE LINE @ RETURN	35.2
NW Quad @ Lake Road		LT	47.3	EDGE LINE @ RETURN	47.3
NE Quad @ Lake Road		LT	40.2	EDGE LINE @ RETURN	40.2
SW Quad @ Ackerman Rd		RT	44.3	EDGE LINE @ RETURN	44.3
SE Quad @ Ackerman Rd		RT	36.2	EDGE LINE @ RETURN	36.2
SE Quad @ Drexel Blvd		RT	29.1	EDGE LINE @ RETURN	29.1
NW Quad @ Springwill Ave		LT	45.3	EDGE LINE @ RETURN	45.3
NE Quad @ Spingwill Ave		LT	38.3	EDGE LINE @ RETURN	38.3
SE Quad @ Broadway Ave		RT	39.6	EDGE LINE @ RETURN	39.6
NE Quad @ Broadway Ave		RT	67.1	EDGE LINE @ RETURN	67.1
SE Quad @ Herman Ave		RT	43.6	EDGE LINE @ RETURN	43.6
NE Quad @ Herman Ave		RT	35.8	EDGE LINE @ RETURN	35.8
SW Quad @ Hillside Ave		LT	36.7	EDGE LINE @ RETURN	36.7
NW Quad @ Hillside Ave		LT	40.4	EDGE LINE @ RETURN	40.4
SE Quad @ Kathryn Dr		RT	37.2	EDGE LINE @ RETURN	37.2
NE Quad @ Kathryn Dr		RT	38.8	EDGE LINE @ RETURN	38.8
SW Quad @ Ravine Ave		LT	48.9	EDGE LINE @ RETURN	48.9
NW Quad @ Ravine Ave		LT	50.2	EDGE LINE @ RETURN	50.2
SW Quad @ Halings Rd		LT	66.2	EDGE LINE @ RETURN	66.2
NW Quad @ Halings Rd		LT	45.5	EDGE LINE @ RETURN	45.5
SW Quad @ Lotus Rd		LT	37.4	EDGE LINE @ RETURN	37.4
NW Quad @ Lotus Rd		LT	36.3	EDGE LINE @ RETURN	36.3
SW Quad @ Elm Tree Rd		LT	44.2	EDGE LINE @ RETURN	44.2
NW Quad @ Elm Tree Rd		LT	61.2	EDGE LINE @ RETURN	61.2
SW Quad @ Ent 208+32.5		LT	50.9	EDGE LINE @ RETURN	50.9
NW Quad @ Ent 208+32.6		LT	28.9	EDGE LINE @ RETURN	28.9
NW Quad @ Bluff Lake Rd		LT	57.4	EDGE LINE @ RETURN	57.4
NE Quad @ Bluff Lake Rd		LT	56.7	EDGE LINE @ RETURN	56.7
SW Quad @ Rena Ave		RT	29.3	EDGE LINE @ RETURN	29.3
SE Quad @ Rena Ave		RT	65.6	EDGE LINE @ RETURN	65.6
NW Quad @ Bluff Dr		LT	34.8	EDGE LINE @ RETURN	34.8
NE Quad @ Bluff Dr		LT	50.3	EDGE LINE @ RETURN	50.3
NW Quad @ Lakeshore Dr		LT	34.0	EDGE LINE @ RETURN	34.0
NE Quad @ Lakeshore Dr		LT	32.9	EDGE LINE @ RETURN	32.9
SW Quad @ Sibley Dr		RT	35.0	EDGE LINE @ RETURN	35.0
SE Quad @ Sibley Dr		RT	42.1	EDGE LINE @ RETURN	42.1
NW Quad @ North Lake Blv		LT	41.5	EDGE LINE @ RETURN	41.5
NE Quad @ North Lake Blvd		LT	46.6	EDGE LINE @ RETURN	46.6
NW Quad @ Sunset Dr		LT	78.4	EDGE LINE @ RETURN	78.4
NE Quad @ Sunset Dr		LT	61.6	EDGE LINE @ RETURN	61.6
NW Quad @ IL Route 59		LT	93.3	EDGE LINE @ RETURN	93.3

5" SOLID WHITE LINE

FROM	TO	LEFT OR RIGHT	LENGTH (FEET)	DESCRIPTION	QUANTITY (FEET)
119+21.78	134+74.20	LT	1565.0	EDGE LINE	1565.0
135+51.43	153+13.82	LT	1761.7	EDGE LINE	1761.7
153+90.55	170+54.02	LT	1652.7	EDGE LINE	1652.7
171+29.24	188+67.96	LT	1732.2	EDGE LINE	1732.2
190+08.19	192+77.63	LT	269.4	EDGE LINE	269.4
194+00.12	202+04.86	LT	805.0	EDGE LINE	805.0
202+67.20	204+92.92	LT	227.7	EDGE LINE	227.7
206+15.01	207+67.40	LT	153.8	EDGE LINE	153.8
208+82.79	224+95.66	LT	1627.5	EDGE LINE	1627.5
226+22.12	251+85.42	LT	2564.9	EDGE LINE	2564.9
252+61.76	254+73.91	LT	213.3	EDGE LINE	213.3
255+23.16	264+07.25	LT	884.1	EDGE LINE	884.1
265+19.82	275+86.85	LT	1067.0	EDGE LINE	1067.0
277+16.37	289+10.62	LT	1194.3	EDGE LINE	1194.3
119+21.78	122+91.85	RT	368.3	EDGE LINE	368.3
123+52.71	143+44.59	RT	1981.6	EDGE LINE	1981.6
144+31.34	152+62.94	RT	831.7	EDGE LINE	831.7
153+72.81	166+66.77	RT	1305.0	EDGE LINE	1305.0
167+97.09	170+54.46	RT	257.4	EDGE LINE	257.4
171+30.31	188+67.52	RT	1743.7	EDGE LINE	1743.7
189+35.59	238+22.97	RT	4869.1	EDGE LINE	4869.1
239+31.15	261+36.38	RT	2202.9	EDGE LINE	2202.9
261+94.65	290+02.80	RT	2808.6	EDGE LINE	2808.6
PAY CODE 70300230				TOTAL 1 APPLICATION	34022.4

6" SOLID WHITE LINE (FEET)

FROM	TO	LEFT OR RIGHT	LENGTH (FEET)	DESCRIPTION	QUANTITY (FEET)
206+02.88	207+90.17	RT	186.7	TURN LANE	186.7
208+70.69	210+08.10	LT	138.7	TURN LANE	138.7
237+15.05	238+28.55	RT	113.5	TURN LANE	113.5
237+77.45	240+63.88	LT	286.4	TURN LANE	286.4
287+72.12	290+02.80	RT	230.7	TURN LANE	230.7
289+13.53	290+02.80	RT	89.3	TURN LANE	89.3

6" DOTTED WHITE LINE (FEET)

235+15.61	237+15.05	RT	199.4	TURN LANE	50.0
240+63.88	242+39.41	LT	175.5	TURN LANE	44.0
285+91.48	287+72.12	RT	180.6	TURN LANE	45.0
287+43.59	289+13.53	RT	169.9	TURN LANE	42.0
PAY CODE 70300240				TOTAL 1 APPLICATION	1226.3

12" SOLID YELLOW LINE (FEET)

FROM	TO	NUMBER OF STRIPES	AVG. LENGTH	DESCRIPTION	QUANTITY (FEET)
202+65.20	205+19.97	8.0	11.2	MEDIAN DIAGONALS	89.7
208+68.19	214+84.75	14.0	12.8	MEDIAN DIAGONALS	178.9
281+78.21	287+72.27	17.0	9.9	MEDIAN DIAGONALS	168.7
PAY CODE 70300260				TOTAL 1 APPLICATION	437.3

16 PAVEMENT MARKING TAPE, TYPE III

LETTERS & SYMBOLS

FROM	TO	LEFT OR RIGHT	LENGTH (FEET)	DESCRIPTION	QUANTITY (FEET)
216+02.88	216+34.88	C/L	32.0	LEFT TURN ONLY	109.0
199+76.10	200+08.10	LT	32.0	RIGHT TURN ONLY	109.0
247+15.05	247+47.05	RT	32.0	RIGHT TURN ONLY	109.0
287+82.12	288+14.12	C/L	32.0	LEFT TURN ONLY	109.0
289+23.53	289+55.53	C/L	32.0	LEFT TURN ONLY	109.0
				TOTAL 1 APPLICATION	545.0

4" DOUBLE YELLOW LINE, 4' DASH 40' SKIP = LENGTH X 0.20

119+21.78	123+07.48	C/L	385.7	DOUBLE YELLOW C/L	77.1
123+35.69	134+91.95	C/L	1156.3	DOUBLE YELLOW C/L	231.3
135+41.28	143+64.18	C/L	822.9	DOUBLE YELLOW C/L	164.6
144+17.86	152+71.48	C/L	853.6	DOUBLE YELLOW C/L	170.7
153+62.74	166+81.06	C/L	1318.3	DOUBLE YELLOW C/L	263.7
167+83.18	170+72.42	C/L	289.2	DOUBLE YELLOW C/L	57.8
171+07.71	188+81.18	C/L	1773.5	DOUBLE YELLOW C/L	354.7
189+22.82	189+39.32	C/L	16.5	DOUBLE YELLOW C/L	3.3
189+97.36	193+29.04	C/L	331.7	DOUBLE YELLOW C/L	66.3
193+86.90	193+98.84	C/L	11.9	DOUBLE YELLOW C/L	2.4
194+75.18	196+92.32	C/L	217.1	DOUBLE YELLOW C/L	43.4
197+21.90	202+65.20	C/L	543.3	DOUBLE YELLOW C/L	108.7
202+65.20	205+19.97	RT	258.8	MEDIAN	51.8
202+65.20	205+19.97	LT	257.8	MEDIAN	51.6
206+02.86	207+90.17	C/L	187.3	DOUBLE YELLOW C/L	37.5
208+68.19	214+84.25	RT	619.8	MEDIAN	124.0
208+68.19	214+84.25	LT	619.4	MEDIAN	123.9
214+84.25	238+28.55	C/L	2344.3	DOUBLE YELLOW C/L	468.9
239+13.11	251+89.57	C/L	1276.5	DOUBLE YELLOW C/L	255.3
252+39.61	254+75.70	C/L	236.1	DOUBLE YELLOW C/L	47.2
255+29.39	261+44.00	C/L	614.6	DOUBLE YELLOW C/L	122.9
261+96.26	264+30.52	C/L	234.3	DOUBLE YELLOW C/L	46.9
264+71.41	264+89.79	C/L	18.4	DOUBLE YELLOW C/L	3.7
265+23.92	276+45.64	C/L	1121.7	DOUBLE YELLOW C/L	224.3
277+03.03	281+78.21	C/L	475.2	DOUBLE YELLOW C/L	95.0
281+78.21	287+72.27	RT	594.6	MEDIAN	118.9
281+78.21	287+72.27	LT	594.1	MEDIAN	118.8
287+72.27	290+02.82	C/L	230.5	DOUBLE YELLOW C/L	46.1
				TOTAL 1 APPLICATION	3480.7

4" SOLID WHITE LINE

FROM	TO	LEFT OR RIGHT	LENGTH (FEET)	DESCRIPTION	QUANTITY (FEET)
206+02.88	207+90.17	RT	187.3	TURN LANE	37.5
208+70.69	210+08.10	LT	137.4	TURN LANE	27.5
237+15.05	238+28.55	RT	113.5	TURN LANE	22.7
237+77.45	240+63.88	LT	286.4	TURN LANE	57.3
287+72.12	290+02.80	RT	230.7	TURN LANE	46.1
289+13.53	290+02.80	RT	89.3	TURN LANE	17.9
				TOTAL 1 APPLICATION	208.9
PAY CODE 70300520				COMPOSITE TOTAL	4234.6

18 THERMOPLASTIC PAVEMENT MARKIINGS

LETTERS & SYMBOLS - WHITE (SQUARE FEET)

FROM	TO	LEFT OR RIGHT	LENGTH (FEET)	DESCRIPTION	QUANTITY (SQ FT)
216+02.88	216+34.88	C/L	32.0	LEFT TURN ONLY	36.4
199+76.10	200+08.10	LT	32.0	RIGHT TURN ONLY	36.4
247+15.05	247+47.05	RT	32.0	RIGHT TURN ONLY	36.4
287+82.12	288+14.12	C/L	32.0	LEFT TURN ONLY	36.4
289+23.53	289+55.53	C/L	32.0	LEFT TURN ONLY	36.4
PAY CODE 78000100				TOTAL	182.0

4" DOUBLE SOLID YELLOW LINE = LENGTH X 2

FROM	TO	LEFT OR RIGHT	LENGTH (FEET)	DESCRIPTION	QUANTITY (FEET)
202+65.20	205+19.97	RT	258.8	MEDIAN	517.6
202+65.20	205+19.97	LT	257.8	MEDIAN	515.6
208+68.19	214+84.25	RT	619.8	MEDIAN	1239.6
208+68.19	214+84.25	LT	619.4	MEDIAN	1238.8
281+78.21	287+72.27	RT	594.6	MEDIAN	1189.2
281+78.21	287+72.27	LT	594.1	MEDIAN	1188.1
287+72.27	290+02.82	C/L	230.5	DOUBLE SOLID	461.1
PAY CODE 78000200				TOTAL	6350.0

5" SOLID WHITE LINE (FEET)

FROM	TO	LEFT OR RIGHT	LENGTH (FEET)	DESCRIPTION	QUANTITY (FEET)
SE Quad @ Stonegate Pl		RT	51.2	EDGE LINE @ RETURN	51.2
NE Quad @ Stonegate Pl		RT	35.2	EDGE LINE @ RETURN	35.2
NW Quad @ Lake Road		LT	47.3	EDGE LINE @ RETURN	47.3
NE Quad @ Lake Road		LT	40.2	EDGE LINE @ RETURN	40.2
SW Quad @ Ackerman Rd		RT	44.3	EDGE LINE @ RETURN	44.3
SE Quad @ Ackerman Rd		RT	36.2	EDGE LINE @ RETURN	36.2
SE Quad @ Drexel Blvd		RT	29.1	EDGE LINE @ RETURN	29.1
NW Quad @ Springw ill Ave		LT	45.3	EDGE LINE @ RETURN	45.3
NE Quad @ Spingw ill Ave		LT	38.3	EDGE LINE @ RETURN	38.3
SE Quad @ Broadw ay Ave		RT	39.6	EDGE LINE @ RETURN	39.6
NE Quad @ Broadw ay Ave		RT	67.1	EDGE LINE @ RETURN	67.1
SE Quad @ Herman Ave		RT	43.6	EDGE LINE @ RETURN	43.6
NE Quad @ Herman Ave		RT	35.8	EDGE LINE @ RETURN	35.8
SW Quad @ Hillside Ave		LT	36.7	EDGE LINE @ RETURN	36.7
NW Quad @ Hillside Ave		LT	40.4	EDGE LINE @ RETURN	40.4
SE Quad @ Kathryn Dr		RT	37.2	EDGE LINE @ RETURN	37.2
NE Quad @ Kathryn Dr		RT	38.8	EDGE LINE @ RETURN	38.8
SW Quad @ Ravine Ave		LT	48.9	EDGE LINE @ RETURN	48.9
NW Quad @ Ravine Ave		LT	50.2	EDGE LINE @ RETURN	50.2
SW Quad @ Halings Rd		LT	66.2	EDGE LINE @ RETURN	66.2
NW Quad @ Halings Rd		LT	45.5	EDGE LINE @ RETURN	45.5
SW Quad @ Lotus Rd		LT	37.4	EDGE LINE @ RETURN	37.4
NW Quad @ Lotus Rd		LT	36.3	EDGE LINE @ RETURN	36.3
SW Quad @ Elm Tree Rd		LT	44.2	EDGE LINE @ RETURN	44.2
NW Quad @ Elm Tree Rd		LT	61.2	EDGE LINE @ RETURN	61.2
SW Quad @ Ent 208+32.5		LT	50.9	EDGE LINE @ RETURN	50.9
NW Quad @ Ent 208+32.6		LT	28.9	EDGE LINE @ RETURN	28.9
NW Quad @ Bluff Lake Rd		LT	57.4	EDGE LINE @ RETURN	57.4
NE Quad @ Bluff Lake Rd		LT	56.7	EDGE LINE @ RETURN	56.7
SW Quad @ Rena Ave		RT	29.3	EDGE LINE @ RETURN	29.3
SE Quad @ Rena Ave		RT	65.6	EDGE LINE @ RETURN	65.6
NW Quad @ Bluff Dr		LT	34.8	EDGE LINE @ RETURN	34.8
NE Quad @ Bluff Dr		LT	50.3	EDGE LINE @ RETURN	50.3
NW Quad @ Lakeshore Dr		LT	34.0	EDGE LINE @ RETURN	34.0
NE Quad @ Lakeshore Dr		LT	32.9	EDGE LINE @ RETURN	32.9
SW Quad @ Sibley Dr		RT	35.0	EDGE LINE @ RETURN	35.0
SE Quad @ Sibley Dr		RT	42.1	EDGE LINE @ RETURN	42.1
NW Quad @ North Lake Blvd		LT	41.5	EDGE LINE @ RETURN	41.5
NE Quad @ North Lake Blvd		LT	46.6	EDGE LINE @ RETURN	46.6
NW Quad @ Sunset Dr		LT	78.4	EDGE LINE @ RETURN	78.4
NE Quad @ Sunset Dr		LT	61.6	EDGE LINE @ RETURN	61.6
NW Quad @ IL Route 59		LT	93.3	EDGE LINE @ RETURN	93.3
PAY CODE 78000300				TOTAL	1935.5

6" SOLID WHITE LINE (FEET)

FROM	TO	LEFT OR RIGHT	LENGTH (FEET)	DESCRIPTION	QUANTITY (FEET)
206+02.88	207+90.17	RT	186.7	TURN LANE	186.7
208+70.69	210+08.10	LT	138.7	TURN LANE	138.7
237+15.05	238+28.55	RT	113.5	TURN LANE	113.5
237+77.45	240+63.88	LT	286.4	TURN LANE	286.4
287+72.12	290+02.80	RT	230.7	TURN LANE	230.7
289+13.53	290+02.80	RT	89.3	TURN LANE	89.3

6" DOTTED WHITE LINE (FEET)

FROM	TO	LEFT OR RIGHT	LENGTH (FEET)	DESCRIPTION	QUANTITY (FEET)
235+15.61	237+15.05	RT	199.4	TURN LANE	50.0
240+63.88	242+39.41	LT	175.5	TURN LANE	44.0
285+91.48	287+72.12	RT	180.6	TURN LANE	45.0
287+43.59	289+13.53	RT	169.9	TURN LANE	42.0
PAY CODE 78000400				TOTAL	1226.3

12" SOLID YELLOW LINE (FEET)

FROM	TO	NUMBER OF STRIPES	AVG. LENGTH	DESCRIPTION	QUANTITY (FEET)
202+65.20	205+19.97	8.0	11.2	MEDIAN DIAGONALS	89.7
208+68.19	214+84.75	14.0	12.8	MEDIAN DIAGONALS	178.9
281+78.21	287+72.27	17.0	9.9	MEDIAN DIAGONALS	168.7
PAY CODE 78000600				TOTAL	437.3

21 RECESSED REFLECTIVE PAVEMENT MARKER

FROM	TO	LT/RT	DESCRIPTION	LENGTH (FEET)	SPACING (FEET)	QUANTITY (EACH)
119+22.00	120+24.00	CL	LANE	102.0		2
120+40.00	133+18.00	CL	LANE	1278.0	40.0	64
133+58.00	135+58.00	CL	LANE	200.0	40.0	5
148+92.60	150+52.60	CL	LANE	160.0	80.0	3
151+32.60	164+14.00	CL	LANE	1281.4	40.0	64
164+94.00	166+54.00	CL	LANE	240.0	80.0	3
173+66.60	175+26.60	CL	LANE	160.0	80.0	3
176+06.60	186+06.60	CL	LANE	1000.0	40.0	50
186+86.60	189+26.60	CL	LANE	240.0	80.0	3
201+44.00	230+12.00	CL	LANE	2868.0	VAR	133
PAY CODE X7810300					SUBTOTAL	330
					5% CONTIGENCY	16
					TOTAL	346

RAISED REFLECTIVE PAVEMENT MARKER REMOVAL

FROM	TO	LT/RT	DESCRIPTION	LENGTH (FEET)	SPACING (FEET)	QUANTITY (EACH)
119+22.00	120+24.00	CL	LANE	102.0		2
120+40.00	133+18.00	CL	LANE	1278.0	40.0	64
133+58.00	135+58.00	CL	LANE	200.0	40.0	5
148+92.60	150+52.60	CL	LANE	160.0	80.0	3
151+32.60	164+14.00	CL	LANE	1281.4	40.0	64
164+94.00	166+54.00	CL	LANE	240.0	80.0	3
173+66.60	175+26.60	CL	LANE	160.0	80.0	3
176+06.60	186+06.60	CL	LANE	1000.0	40.0	50
186+86.60	189+26.60	CL	LANE	240.0	80.0	3
201+44.00	230+12.00	CL	LANE	2868.0	VAR	133
PAY CODE 78300200					SUBTOTAL	330
					5% CONTIGENCY	16
					TOTAL	346

20 SEEDING (COMPLETE)

FROM	TO	LT/RT	LENGTH (FEET)	WIDTH (FEET)	AREA (SQ FT)	AREA (SQ YDS)
119+21.78	285+91.00	LT	13946.5	3.0	41839.5	4648.8
78+02.00	78+54.00	RT	13809.4	3.0	41428.1	4603.1
223+00.00	225+00.00	LT	200.0		4158.0	462.0
*DRAINAGE DITHCING PLAN						
GRADING AND SHAPING DITCHES			105.0	6.0	630.0	70.0
*ESTIMATED						
PAY CODE XX006343					SUBTOTAL	9783.9
					10% CONTINGENCY	978.4
					TOTAL	10762.3

19 PAINT PAVEMENT MARKINGS

4" DOUBLE SOLID YELLOW LINE = LENGTH X 2

FROM	TO	LEFT OR RIGHT	LENGTH (FEET)	DESCRIPTION	QUANTITY (FEET)
119+21.78	123+07.48	C/L	385.7	DOUBLE YELLOW C/L	771.4
123+35.69	134+91.95	C/L	1156.3	DOUBLE YELLOW C/L	2312.5
135+41.28	143+64.18	C/L	822.9	DOUBLE YELLOW C/L	1645.8
144+17.86	152+71.48	C/L	853.6	DOUBLE YELLOW C/L	1707.2
153+62.74	166+81.06	C/L	1318.3	DOUBLE YELLOW C/L	2636.6
167+83.18	170+72.42	C/L	289.2	DOUBLE YELLOW C/L	578.5
171+07.71	188+81.18	C/L	1773.5	DOUBLE YELLOW C/L	3546.9
189+22.82	189+39.32	C/L	16.5	DOUBLE YELLOW C/L	33.0
189+97.36	193+29.04	C/L	331.7	DOUBLE YELLOW C/L	663.4
193+86.90	193+98.84	C/L	11.9	DOUBLE YELLOW C/L	23.9
194+75.18	196+92.32	C/L	217.1	DOUBLE YELLOW C/L	434.3
197+21.90	202+65.20	C/L	543.3	DOUBLE YELLOW C/L	1086.6
206+02.86	207+90.17	C/L	187.3	DOUBLE YELLOW C/L	374.6
214+84.25	225+19.55	C/L	1035.3	DOUBLE YELLOW C/L	2070.6
226+21.67	226+77.46	C/L	55.8	DOUBLE YELLOW C/L	111.6
247+26.29	251+89.57	C/L	463.3	DOUBLE YELLOW C/L	926.6
252+39.61	254+75.70	C/L	236.1	DOUBLE YELLOW C/L	472.2
255+29.39	261+44.00	C/L	614.6	DOUBLE YELLOW C/L	1229.2
261+96.26	264+30.52	C/L	234.3	DOUBLE YELLOW C/L	468.5
264+71.41	264+89.79	C/L	18.4	DOUBLE YELLOW C/L	36.8
265+23.92	276+45.64	C/L	1121.7	DOUBLE YELLOW C/L	2243.4
277+03.03	281+78.21	C/L	475.2	DOUBLE YELLOW C/L	950.4

4" YELLOW LINE - SOLID/10-30 SKIP = LENGTH X 1.25

FROM	TO	LEFT OR RIGHT	LENGTH (FEET)	DESCRIPTION	QUANTITY (FEET)
226+77.46	234+33.11	C/L	755.7	SOLID/10-30 SKIP	944.6
245+40.40	247+26.29	C/L	185.9	SOLID/10-30 SKIP	232.4

4" YELLOW LINE - SOLID/10-30 SKIP = LENGTH X 0.25

FROM	TO	LEFT OR RIGHT	LENGTH (FEET)	DESCRIPTION	QUANTITY (FEET)
234+33.11	238+28.55	C/L	395.4	SOLID/10-30 SKIP	98.9
239+13.11	245+40.40	C/L	627.3	SOLID/10-30 SKIP	156.8
PAY CODE 78001110				TOTAL	25756.6

5" SOLID WHITE LINE

FROM	TO	LEFT OR RIGHT	LENGTH (FEET)	DESCRIPTION	QUANTITY (FEET)
119+21.78	134+74.20	LT	1565.0	EDGE LINE	1565.0
135+51.43	153+13.82	LT	1761.7	EDGE LINE	1761.7
153+90.55	170+54.02	LT	1652.7	EDGE LINE	1652.7
171+29.24	188+67.96	LT	1732.2	EDGE LINE	1732.2
190+08.19	192+77.63	LT	269.4	EDGE LINE	269.4
194+00.12	202+04.86	LT	805.0	EDGE LINE	805.0
202+67.20	204+92.92	LT	227.7	EDGE LINE	227.7
206+15.01	207+67.40	LT	153.8	EDGE LINE	153.8
208+82.79	224+95.66	LT	1627.5	EDGE LINE	1627.5
226+22.12	251+85.42	LT	2564.9	EDGE LINE	2564.9
252+61.76	254+73.91	LT	213.3	EDGE LINE	213.3
255+23.16	264+07.25	LT	884.1	EDGE LINE	884.1
265+19.82	275+86.85	LT	1067.0	EDGE LINE	1067.0
277+16.37	289+10.62	LT	1194.3	EDGE LINE	1194.3
119+21.78	122+91.85	RT	368.3	EDGE LINE	368.3
123+52.71	143+44.59	RT	1981.6	EDGE LINE	1981.6
144+31.34	152+62.94	RT	831.7	EDGE LINE	831.7
153+72.81	166+66.77	RT	1305.0	EDGE LINE	1305.0
167+97.09	170+54.46	RT	257.4	EDGE LINE	257.4
171+30.31	188+67.52	RT	1743.7	EDGE LINE	1743.7
189+35.59	238+22.97	RT	4869.1	EDGE LINE	4869.1
239+31.15	261+36.38	RT	2202.9	EDGE LINE	2202.9
261+94.65	290+02.80	RT	2808.6	EDGE LINE	2808.6
PAY CODE 78001120				TOTAL	32086.9

SCALE: 1″ = 10′ HORIZ.
1″ = 2′ VERT.

◆ DENOTES PAVEMENT MARKING
SEE PLAN FOR TYPE

EXIST. PAVEMENT PER RECORDS:

5.) 1991 - 1 1/2″ Surface Binder
1991 - 1 1/2″ Leveling Binder
1991 - 1/2″ Leveling Binder
4.) 1973 - 2″ Bit. Surface
3.) 1964-1″ Bit. Plant Mix
2.) 1938- 2 1/2″ C-4
1.) 1935- 6″ Gravel

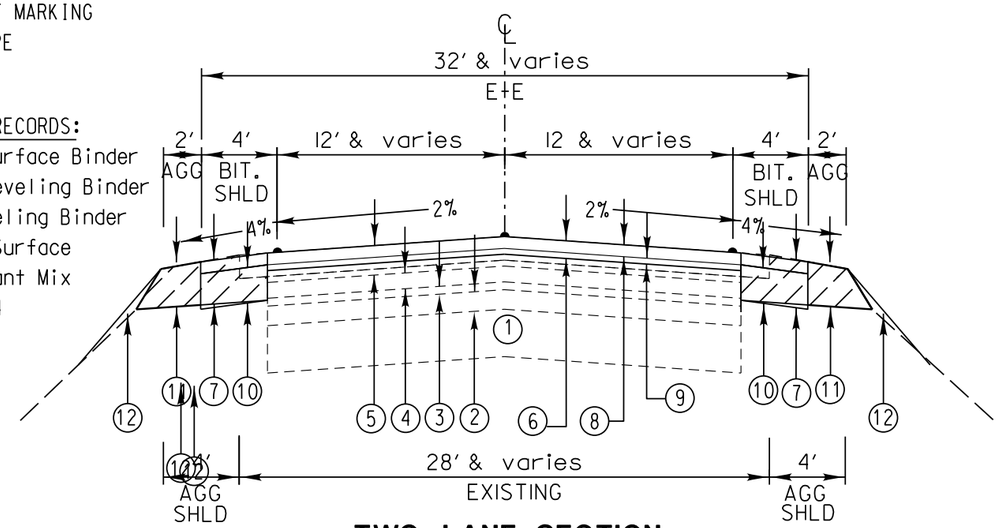

PROPOSED REMOVAL:

6.) 2 1/4″ HMA SURFACE REMOVAL
7.) GRADING AND SHAPING SHOULDER

PROPOSED PAVEMENT:

8.) 1½″ BIT. CONC. SURFACE COURSE, MIX "D", N50
9.) ¾″ POLYMERIZED LEVELING BINDER (MACHINE METHOD), IL-4.75, N50
10.) 4½″ BITUMINOUS CONCRETE BINDER COURSE, HOT-MIX ASPHALT, IL-19.0, N50
11.) AGGREGATE SHOULDERS, TYPE A
12.) SEEDING COMPLETE
13.) 6″ BITUMINOUS SHOULDER

TWO LANE SECTION

STA. 119+27.78 TO 121+60
STA. 133+00 TO 135+00

SCALE: 1″ = 10′ HORIZ.
1″ = 2′ VERT.

◆ DENOTES PAVEMENT MARKING
SEE PLAN FOR TYPE

EXIST. PAVEMENT PER RECORDS:

5.) 1991 - 1 1/2″ Surface Binder
1991 - 1 1/2″ Leveling Binder
1991 - 1/2″ Leveling Binder
4.) 1973 - 2″ Bit. Surface
3.) 1964-1″ Bit. Plant Mix
2.) 1938- 2 1/2″ C-4
1.) 1935- 6″ Gravel

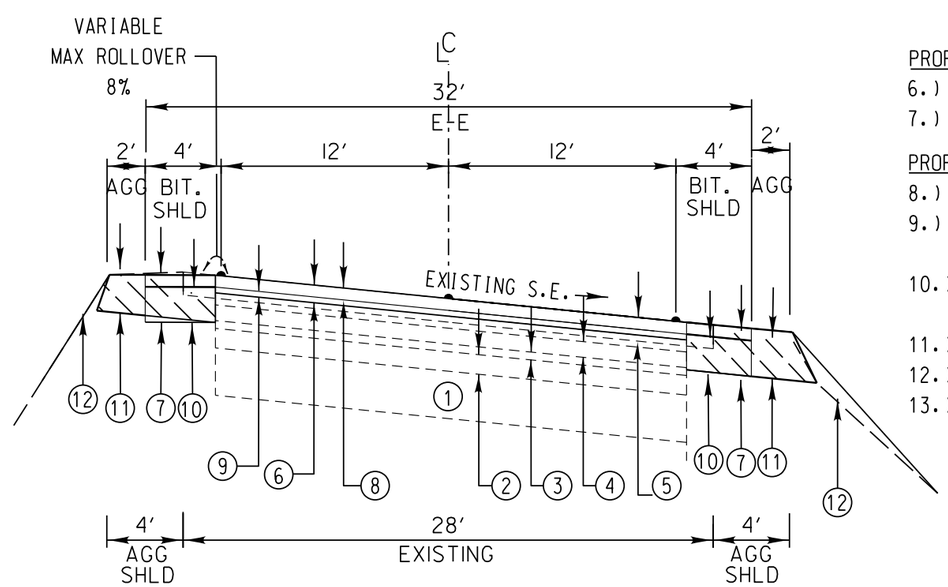

PROPOSED REMOVAL:

6.) 2 1/4″ HMA SURFACE REMOVAL
7.) GRADING AND SHAPING SHOULDER

PROPOSED PAVEMENT:

8.) 1½″ BIT. CONC. SURFACE COURSE, MIX "D", N50
9.) ¾″ POLYMERIZED LEVELING BINDER (MACHINE METHOD), IL-4.75, N50
10.) 4½″ BITUMINOUS CONCRETE BINDER COURSE, HOT-MIX ASPHALT, IL-19.0, N50
11.) AGGREGATE SHOULDERS, TYPE A
12.) SEEDING COMPLETE
13.) 6″ BITUMINOUS SHOULDER

TWO LANE SECTION

STA. 121+60 TO 133+00

REVISIONS / REMARKS					
NO.	DESCRIPTION	DATE	BY	SURVEYOR:	/
		/ /		DSGNR/LIAISON:	
		/ /		PLOTTED BY:	hdmxb 5/28/2015

VERT 5 0 — SCALES HORIZ. 0 25 50

GRASS LAKE ROAD RESURFACING

LakeCounty Division of Transportation

TYPICAL SECTION
GRASS LAKE ROAD

ROUTE	SECTION	SECTION NUMBER	SHEET	SHEETS
CH18	059	14-00059-09-RS	10	85

FILE NAME: U:\Design\Burke\14-00059-09-RS Grass Lake Road Resurfacing\Grass Lake Rd Resurfacing (E of Bridge to IL Rt 59)\Grass Lake Working files\14-00059-09-RS master.dgn

SCALE: 1″ = 10′ HORIZ.
1″ = 2′ VERT.

- DENOTES PAVEMENT MARKING
SEE PLAN FOR TYPE

EXIST. PAVEMENT PER RECORDS:

5.) 1991 - 1 1/2″ Surface Binder
1991 - 1 1/2″ Leveling Binder
1991 - 1/2″ Leveling Binder
4.) 1973 - 2″ Bit. Surface
3.) 1964-1″ Bit. Plant Mix
2.) 1938- 2 1/2″ C-4
1.) 1935- 6″ Gravel

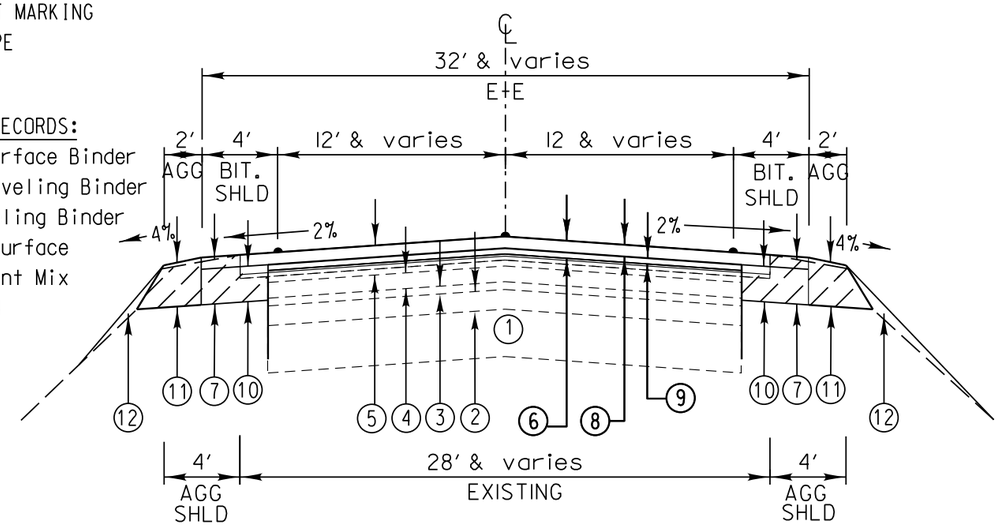

PROPOSED REMOVAL:

6.) 2 1/4″ HMA SURFACE REMOVAL
7.) GRADING AND SHAPING SHOULDER

PROPOSED PAVEMENT:

8.) 1½″ BIT. CONC. SURFACE COURSE, MIX "D", N50
9.) ¾″ POLYMERIZED LEVELING BINDER (MACHINE METHOD), IL-4.75, N50
10.) 4½″ BITUMINOUS CONCRETE BINDER COURSE, HOT-MIX ASPHALT, IL-19.0, N50
11.) AGGREGATE SHOULDERS, TYPE A
12.) SEEDING COMPLETE
13.) 6″ BITUMINOUS SHOULDER

TWO LANE SECTION

SCALE: 1″ = 10′ HORIZ.
1″ = 2′ VERT.

- DENOTES PAVEMENT MARKING
SEE PLAN FOR TYPE

EXIST. PAVEMENT PER RECORDS:

5.) 1991 - 1 1/2″ Surface Binder
1991 - 1 1/2″ Leveling Binder
1991 - 1/2″ Leveling Binder
4.) 1973 - 2″ Bit. Surface
3.) 1964-1″ Bit. Plant Mix
2.) 1938- 2 1/2″ C-4
1.) 1935- 6″ Gravel

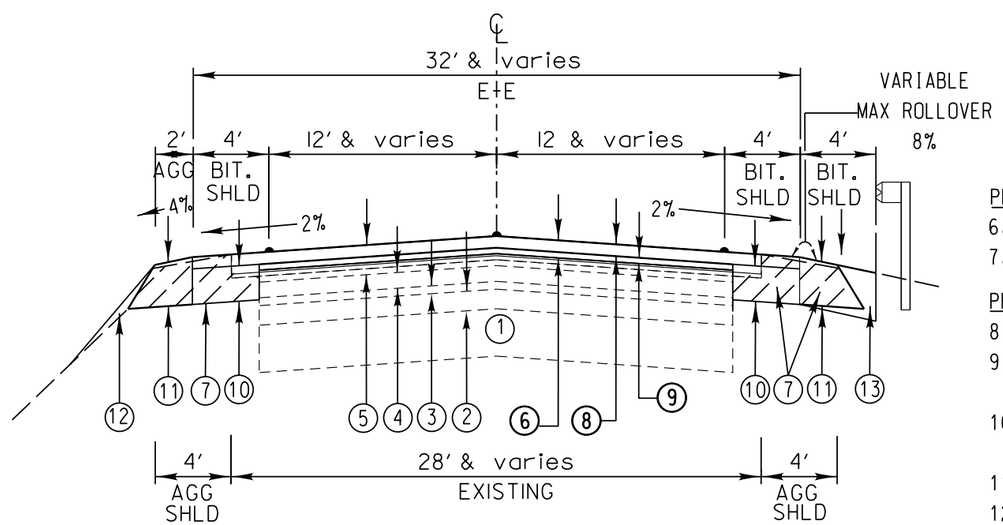

PROPOSED REMOVAL:

6.) 2 1/4″ HMA SURFACE REMOVAL
7.) GRADING AND SHAPING SHOULDER

PROPOSED PAVEMENT:

8.) 1½″ BIT. CONC. SURFACE COURSE, MIX "D", N50
9.) ¾″ POLYMERIZED LEVELING BINDER (MACHINE METHOD), IL-4.75, N50
10.) 4½″ BITUMINOUS CONCRETE BINDER COURSE, HOT-MIX ASPHALT, IL-19.0, N50
11.) AGGREGATE SHOULDERS, TYPE A
12.) SEEDING COMPLETE
13.) 6″ BITUMINOUS SHOULDER

TWO LANE SECTION
WITH GUARDRAIL

REVISIONS / REMARKS					
NO.	DESCRIPTION	DATE	BY	SURVEYOR:	/
		/ /		DSGNR/LIAISON:	
		/ /		PLOTTED BY:	hdmxb 5/28/2015

VERT 5 0 — SCALES HORIZ. 0 25 50

GRASS LAKE ROAD RESURFACING

LakeCounty Division of Transportation

TYPICAL SECTION
GRASS LAKE ROAD

ROUTE	SECTION	SECTION NUMBER	SHEET	SHEETS
CH18	059	14-00059-09-RS	11	85

FILE NAME: U:\Design\Burke\14-00059-09-RS Grass Lake Road Resurfacing\Grass Lake Rd Resurfacing (E of Bridge to IL Rt 59)\Grass Lake Working files\14-00059-09-RS master.dgn

SCALE: 1" = 10' HORIZ.
1" = 2' VERT.

- DENOTES PAVEMENT MARKING SEE PLAN FOR TYPE

EXIST. PAVEMENT PER RECORDS:

5.) 1991 - 1 1/2" Surface Binder
1991 - 1 1/2" Leveling Binder
1991 - 1/2" Leveling Binder
4.) 1973 - 2" Bit. Surface
3.) 1964-1" Bit. Plant Mix
2.) 1938- 2 1/2" C-4
1.) 1935- 6" Gravel

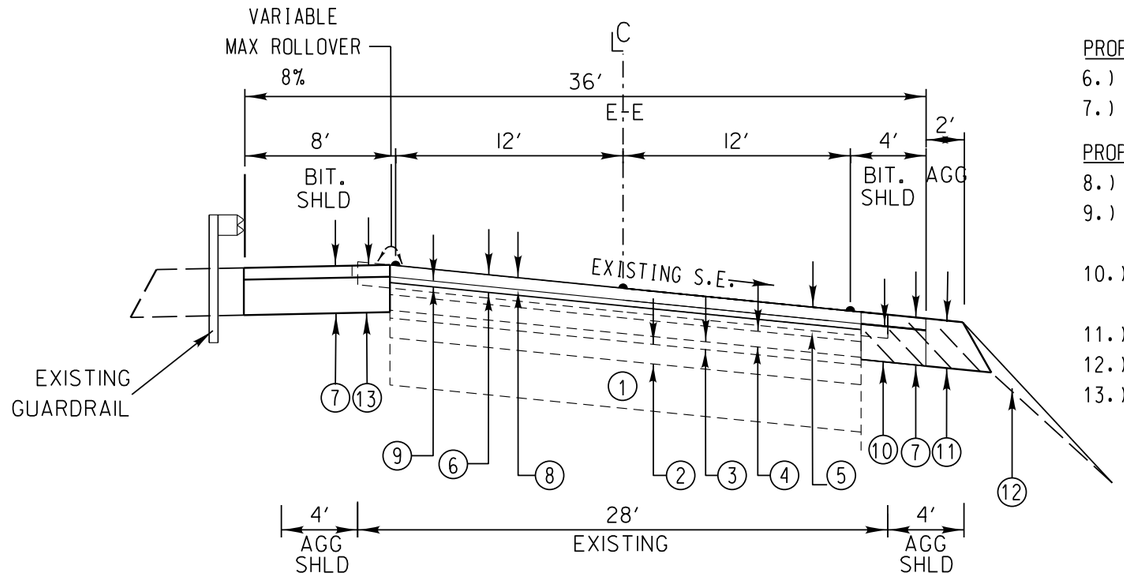

PROPOSED REMOVAL:

6.) 2 1/4" HMA SURFACE REMOVAL
7.) GRADING AND SHAPING SHOULDER

PROPOSED PAVEMENT:

8.) 1½" BIT. CONC. SURFACE COURSE, MIX "D", N50
9.) ¾" POLYMERIZED LEVELING BINDER (MACHINE METHOD), IL-4.75, N50
10.) 4½" BITUMINOUS CONCRETE BINDER COURSE, HOT-MIX ASPHALT, IL-19.0, N50
11.) AGGREGATE SHOULDERS, TYPE A
12.) SEEDING COMPLETE
13.) 6" BITUMINOUS SHOULDER

TWO LANE SECTION

GUARDRAIL ON S.E.

SCALE: 1" = 10' HORIZ.
1" = 2' VERT.

- DENOTES PAVEMENT MARKING SEE PLAN FOR TYPE

EXIST. PAVEMENT PER RECORDS:

15.) 1991 - 8" Bit. Base Course
14.) 1991 - 12" Agg Base
5.) 1991 - 1 1/2" Surface Binder
1991 - 1 1/2" Leveling Binder
1991 - 1/2" Leveling Binder
4.) 1973 - 2" Bit. Surface
3.) 1964-1" Bit. Plant Mix
2.) 1938- 2 1/2" C-4
1.) 1935- 6" Gravel

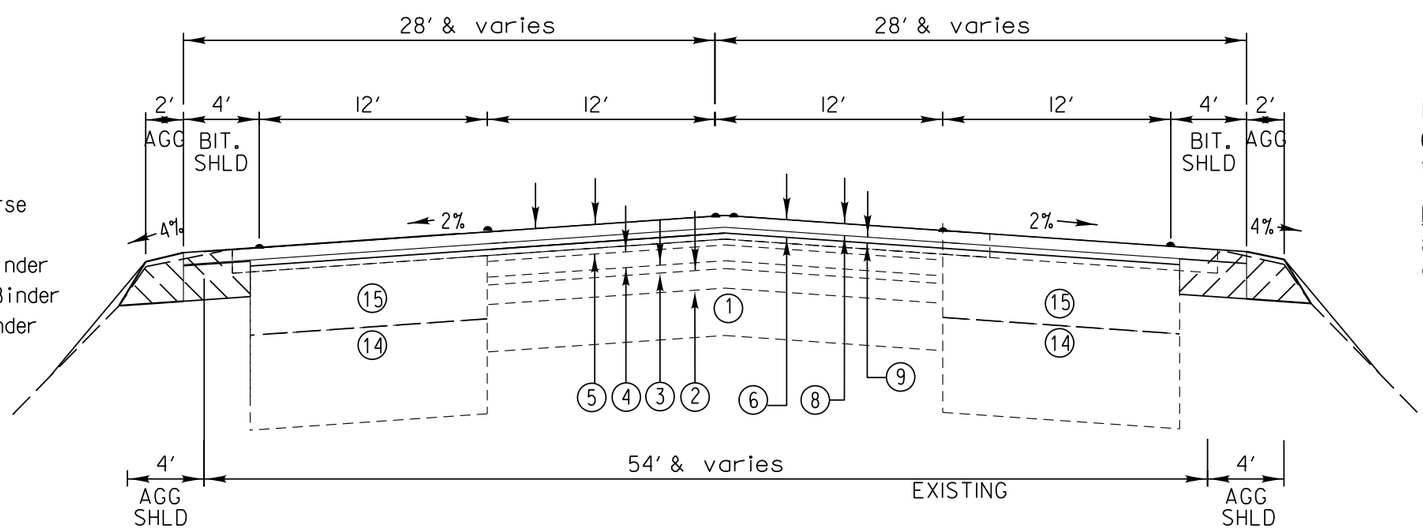

PROPOSED REMOVAL:

6.) 2 1/4" HMA SURFACE REMOVAL
7.) GRADING AND SHAPING SHOULDER

PROPOSED PAVEMENT:

8.) 1½" BIT. CONC. SURFACE COURSE, MIX "D", N50
9.) ¾" POLYMERIZED LEVELING BINDER (MACHINE METHOD), IL-4.75, N50
10.) 4½" BITUMINOUS CONCRETE BINDER COURSE, HOT-MIX ASPHALT, IL-19.0, N50
11.) AGGREGATE SHOULDERS, TYPE A
12.) SEEDING COMPLETE
13.) 6" BITUMINOUS SHOULDER

BYPASS LANE SECTION

REVISIONS / REMARKS					
NO.	DESCRIPTION	DATE	BY	SURVEYOR:	/
		/ /		DSGNR/LIAISON:	
		/ /		PLOTTED BY:	hdmxb 5/28/2015

SCALES VERT. 0 5 HORIZ. 0 25 50

GRASS LAKE ROAD RESURFACING

LakeCounty Division of Transportation

TYPICAL SECTION
GRASS LAKE ROAD

ROUTE	SECTION	SECTION NUMBER	SHEET	SHEETS
CH18	059	14-00059-09-RS	12	85

FILE NAME: U:\Design\Burke\14-00059-09-RS Grass Lake Road Resurfacing\Grass Lake Rd Resurfacing (E of Bridge to IL Rt 59)\Grass Lake Working files\14-00059-09-RS master.dgn

SCALE: 1" = 10' HORIZ.
1" = 2' VERT.

• DENOTES PAVEMENT MARKING
SEE PLAN FOR TYPE

EXIST. PAVEMENT PER RECORDS:

19.) 1998 - B6-24 G&G
18.) 1998 - 1 1/2" Surface Course
1998 - 1" Leveling Binder
17.) 1998 - 10 3/4" Bit. Base Course
16.) 1998 - 12" Agg Base
5.) 1991 - 1 1/2" Surface Binder
1991 - 1 1/2" Leveling Binder
1991 - 1/2" Leveling Binder
4.) 1973 - 2" Bit. Surface
3.) 1964-1" Bit. Plant Mix
2.) 1938- 2 1/2" C-4
1.) 1935- 6" Gravel

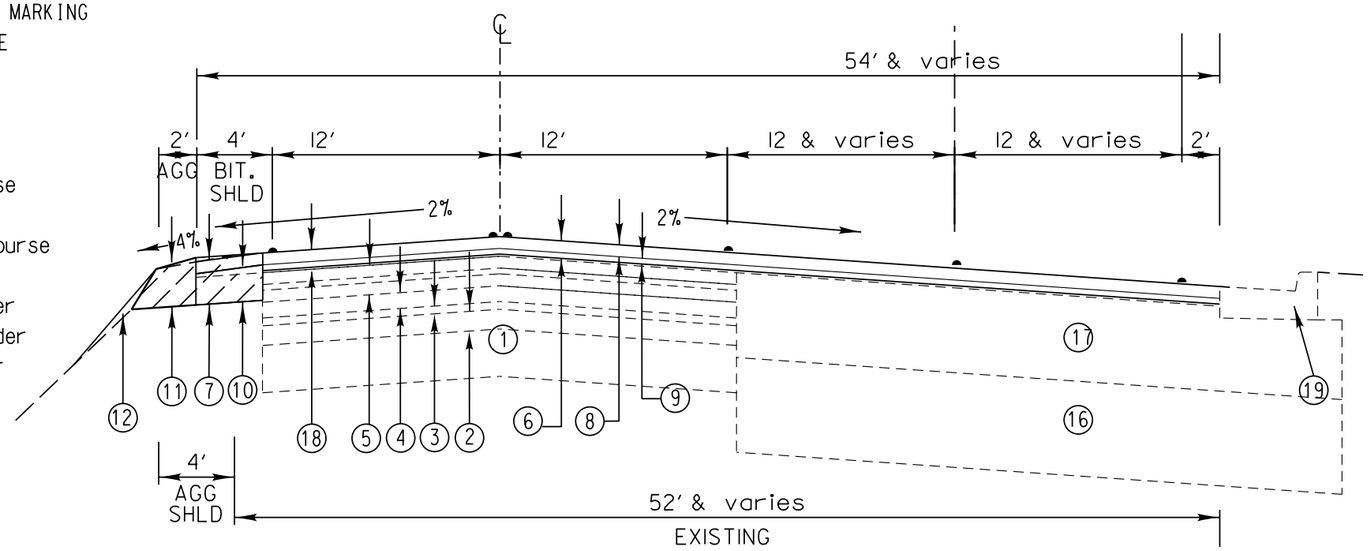

PROPOSED REMOVAL:

6.) 2 1/4" HMA SURFACE REMOVAL
7.) GRADING AND SHAPING SHOULDER

PROPOSED PAVEMENT:

8.) 1½" BIT. CONC. SURFACE COURSE, MIX "D", N50
9.) ¾" POLYMERIZED LEVELING BINDER (MACHINE METHOD), IL-4.75, N50
10.) 4½" BITUMINOUS CONCRETE BINDER COURSE, HOT-MIX ASPHALT, IL-19.0, N50
11.) AGGREGATE SHOULDERS, TYPE A
12.) SEEDING COMPLETE
13.) 6" BITUMINOUS SHOULDER

4 LANE SECTION

GRASS LAKE ROAD @
ROUTE IL. 59

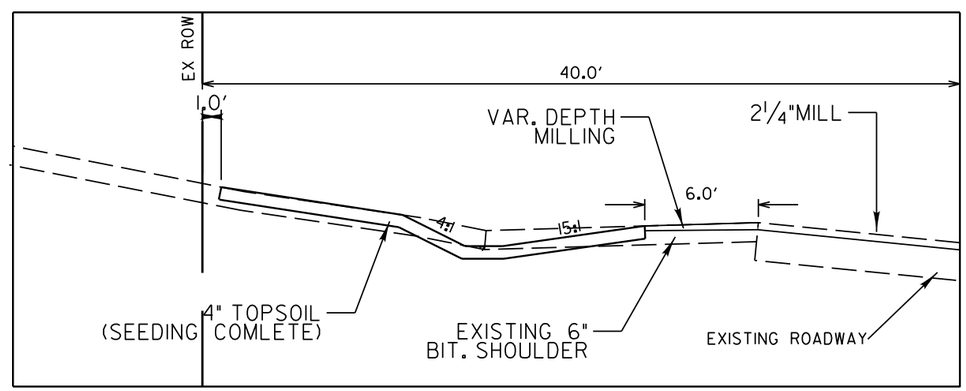

TYPICAL DRAINAGE DETAIL

223+00 TO 225+00 LT

REVISIONS / REMARKS					
NO.	DESCRIPTION	DATE	BY	SURVEYOR:	/
		/ /		DSGNR/LIAISON:	
		/ /		PLOTTED BY:	hdmxb 5/28/2015

SCALES
VERT. 5 0
HORIZ. 0 25 50

GRASS LAKE ROAD RESURFACING

LakeCounty Division of Transportation

TYPICAL SECTION
GRASS LAKE ROAD

ROUTE	SECTION	SECTION NUMBER	SHEET	SHEETS
CH18	059	14-00059-09-RS	13	85

FILE NAME: U:\Design\Burke\14-00059-09-RS Grass Lake Road Resurfacing\Grass Lake Rd Resurfacing (E of Bridge to IL Rt 59)\Grass Lake Working files\14-00059-09-RS master.dgn

GRASS LAKE ROAD
TRAFFIC CONTROL PLAN

TRAFFIC CONTROL AND PROTECTION GENERAL NOTES

1. APPLICABLE STANDARDS

   000001-06, 701001-02, 701006-05, 701306-03, 701311-03
   701501-06, , 701901-04

   LC7000, LC7003, LC7004, LC7005, LC7200, LC7800, LC7802, LC7805

2. The permanent traffic control depicted hereon is the minimum requirement. Additional traffic control devices as specified by the above Highway Standards and the Special Provisions shall be placed by the contractor to the satisfaction of the engineer. All traffic control devices shall be considered incidental to the lump sum pay item "TRAFFIC CONTROL AND PROTECTION (SPECIAL)" unless otherwise indicated in the plans or special provisions.

3. All traffic control warning signs and associated signing mounted with the warning signs shall have black legends and borders on fluorescent orange reflective sheeting.

4. All construction signs, barricades and other devices required to control traffic shall be furnished, installed and maintained by the Contractor.

5. All traffic control devices shall be removed, covered or turned away from traffic immediately when they are no longer necessary. When a sign is covered, it's post shall have a reflective 3 inch x 6 inch delineator installed.

6. The sign spacing for the above Highway Standards shall be according to the Sign Spacing Table shown on this Traffic Control Plan.

7. Road name plates shall be installed on the "ROAD WORK AHEAD" signs at the intersections shown on this Traffic Control Plan. The road name plates shall be 9 inch blanks with 6 inch uppercase and 5 inch lowercase lettering. The road name plates shall be furnished by the Contractor.

8. "ROAD WORK AHEAD" signs shall be equipped with mono-directional Type A amber flashing lights.

SIGN NO.		SIGN TYPE
1		W20-1 (O)-48
2	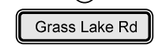	W17-I 100 (O)-9xVARIABLE
3		M6-1R (O)-2115
4		M6-1L (O)-2115
5		M6-3 (O)-2115
6		M6-4 (O)-2115

POSTED SPEED LIMIT
GRASS LAKE ROAD - 40 MPH

TRAFFIC CONTROL SIGN SPACING TABLE	
55 MPH	500 FT.
45-50 MPH	350 FT.
<45 MPH	200 FT.

REVISIONS / REMARKS					
NO.	DESCRIPTION	DATE	BY	SURVEYOR:	/
		/ /		DSGNR/LIAISON:	
		/ /		PLOTTED BY:	hdmxb 5/28/2015

VERT 5 0 — SCALES HORIZ. 0 20 40

GRASS LAKE ROAD RESURFACING

LakeCounty Division of Transportation

TRAFFIC CONTROL PLAN
GRASS LAKE ROAD

ROUTE	SECTION	SECTION NUMBER	SHEET	SHEETS
CH18	59	14-00059-09-RS	14	85

FILE NAME: U:\Design\Burke\14-00059-09-RS Grass Lake Road Resurfacing\Grass Lake Rd Resurfacing (E of Bridge to IL Rt 59)\Grass Lake Working files\14-00059-09-RS master.dgn

REVISIONS / REMARKS					
NO.	DESCRIPTION	DATE	BY	SURVEYOR:	/
		/ /		DSGNR/LIAISON:	
		/ /		PLOTTED BY:	hdmxb 5/28/2015

VERT 5 0

SCALES
HORIZ.
0 100 200

GRASS LAKE ROAD RESURFACING

LakeCounty
Division of Transportation

TRAFFIC CONTROL PLAN
GRASS LAKE ROAD

ROUTE	SECTION	SECTION NUMBER	SHEET	SHEETS
CH18	59	14-00059-09-RS	15	85

FILE NAME: U:\Design\Burke\14-00059-09-RS Grass Lake Road Resurfacing\Grass Lake Rd Resurfacing (E of Bridge to IL Rt 59)\Grass Lake Working files\14-00059-09-RS master.dgn

REVISIONS / REMARKS					
NO.	DESCRIPTION	DATE	BY	SURVEYOR:	/
		/ /		DSGNR/LIAISON:	
		/ /		PLOTTED BY:	hdmxb 5/28/2015

VERT 5 0

SCALES
HORIZ.
0 100 200

GRASS LAKE ROAD RESURFACING

LakeCounty
Division of Transportation

TRAFFIC CONTROL PLAN
GRASS LAKE ROAD

ROUTE	SECTION	SECTION NUMBER	SHEET	SHEETS
CH18	59	14-00059-09-RS	16	85

FILE NAME: U:\Design\Burke\14-00059-09-RS Grass Lake Road Resurfacing\Grass Lake Rd Resurfacing (E of Bridge to IL Rt 59)\Grass Lake Working files\14-00059-09-RS master.dgn

REVISIONS / REMARKS					
NO.	DESCRIPTION	DATE	BY	SURVEYOR:	/
		/ /		DSGNR/LIAISON:	
		/ /		PLOTTED BY:	hdmxb 5/28/2015

SCALES
VERT 5 0
HORIZ. 0 100 200

GRASS LAKE ROAD RESURFACING

LakeCounty
Division of Transportation

TRAFFIC CONTROL PLAN
GRASS LAKE ROAD

ROUTE	SECTION	SECTION NUMBER	SHEET	SHEETS
CH18	59	14-00059-09-RS	17	85

FILE NAME: U:\Design\Burke\14-00059-09-RS Grass Lake Road Resurfacing\Grass Lake Rd Resurfacing (E of Bridge to IL Rt 59)\Grass Lake Working files\14-00059-09-RS master.dgn

REVISIONS / REMARKS					
NO.	DESCRIPTION	DATE	BY	SURVEYOR:	/
		/ /		DSGNR/LIAISON:	
		/ /		PLOTTED BY:	hdmxb 5/28/2015

VERT 5 0

SCALES HORIZ. 0 100 200

GRASS LAKE ROAD RESURFACING

LakeCounty Division of Transportation

TRAFFIC CONTROL PLAN

GRASS LAKE ROAD

ROUTE	SECTION	SECTION NUMBER	SHEET	SHEETS
CH18	59	14-00059-09-RS	18	85

FILE NAME: U:\Design\Burke\14-00059-09-RS Grass Lake Road Resurfacing\Grass Lake Rd Resurfacing (E of Bridge to IL Rt 59)\Grass Lake Working files\14-00059-09-RS master.dgn

REVISIONS / REMARKS					
NO.	DESCRIPTION	DATE	BY	SURVEYOR:	/
		/ /		DSGNR/LIAISON:	
		/ /		PLOTTED BY:	hdmxb 5/28/2015

SCALES
VERT 5 0
HORIZ. 0 100 200

GRASS LAKE ROAD RESURFACING

LakeCounty
Division of Transportation

TRAFFIC CONTROL PLAN
GRASS LAKE ROAD

ROUTE	SECTION	SECTION NUMBER	SHEET	SHEETS
CH18	59	14-00059-09-RS	19	85

FILE NAME: U:\Design\Burke\14-00059-09-RS Grass Lake Road Resurfacing\Grass Lake Rd Resurfacing (E of Bridge to IL Rt 59)\Grass Lake Working files\14-00059-09-RS master.dgn

REVISIONS / REMARKS					
NO.	DESCRIPTION	DATE	BY	SURVEYOR:	/
		/ /		DSGNR/LIAISON:	
		/ /		PLOTTED BY:	hdmxb 5/28/2015

VERT 5 0

SCALES HORIZ. 0 100 200

GRASS LAKE ROAD RESURFACING

LakeCounty Division of Transportation

TRAFFIC CONTROL PLAN

GRASS LAKE ROAD

ROUTE	SECTION	SECTION NUMBER	SHEET	SHEETS
CH18	59	14-00059-09-RS	20	85

FILE NAME: U:\Design\Burke\14-00059-09-RS Grass Lake Road Resurfacing\Grass Lake Rd Resurfacing (E of Bridge to IL Rt 59)\Grass Lake Working files\14-00059-09-RS master.dgn

REVISIONS / REMARKS					
NO.	DESCRIPTION	DATE	BY	SURVEYOR:	/
		/ /		DSGNR/LIAISON:	
		/ /		PLOTTED BY:	hdmxb 5/28/2015

VERT 5 0 — SCALES HORIZ. 0 20 40

GRASS LAKE ROAD RESURFACING

LakeCounty Division of Transportation

REMOVAL SHEET

STA. 116+00.00 TO 128+00.00

ROUTE	SECTION	SECTION NUMBER	SHEET	SHEETS
CH18	59	14-00059-09-RS	21	85

FILE NAME: U:\Design\Burke\14-00059-09-RS Grass Lake Road Resurfacing\Grass Lake Rd Resurfacing (E of Bridge to IL Rt 59)\Grass Lake Working files\14-00059-09-RS master.dgn

MATCH LINE STA. 128+00

MATCH LINE STA. 134+00

MATCH LINE STA. 134+00

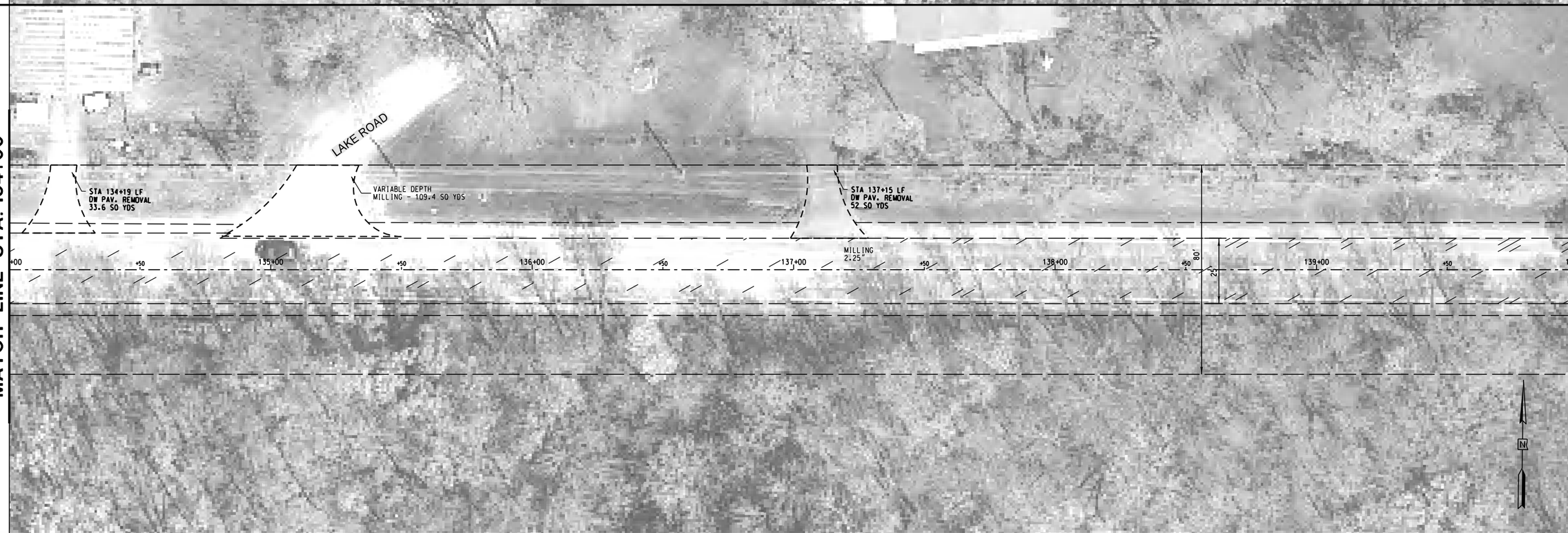

MATCH LINE STA. 140+00

REVISIONS / REMARKS					
NO.	DESCRIPTION	DATE	BY	SURVEYOR:	/
		/ /		DSGNR/LIAISON:	
		/ /		PLOTTED BY:	hdmxb 5/28/2015

SCALES
VERT. 5 0
HORIZ. 0 20 40

GRASS LAKE ROAD RESURFACING

LakeCounty
Division of Transportation

REMOVAL SHEET

STA. 128+00.00 TO 140+00.00

ROUTE	SECTION	SECTION NUMBER	SHEET	SHEETS
CH18	59	14-00059-09-RS	22	85

FILE NAME: U:\Design\Burke\14-00059-09-RS Grass Lake Road Resurfacing\Grass Lake Rd Resurfacing (E of Bridge to IL Rt 59)\Grass Lake Working files\14-00059-09-RS master.dgn

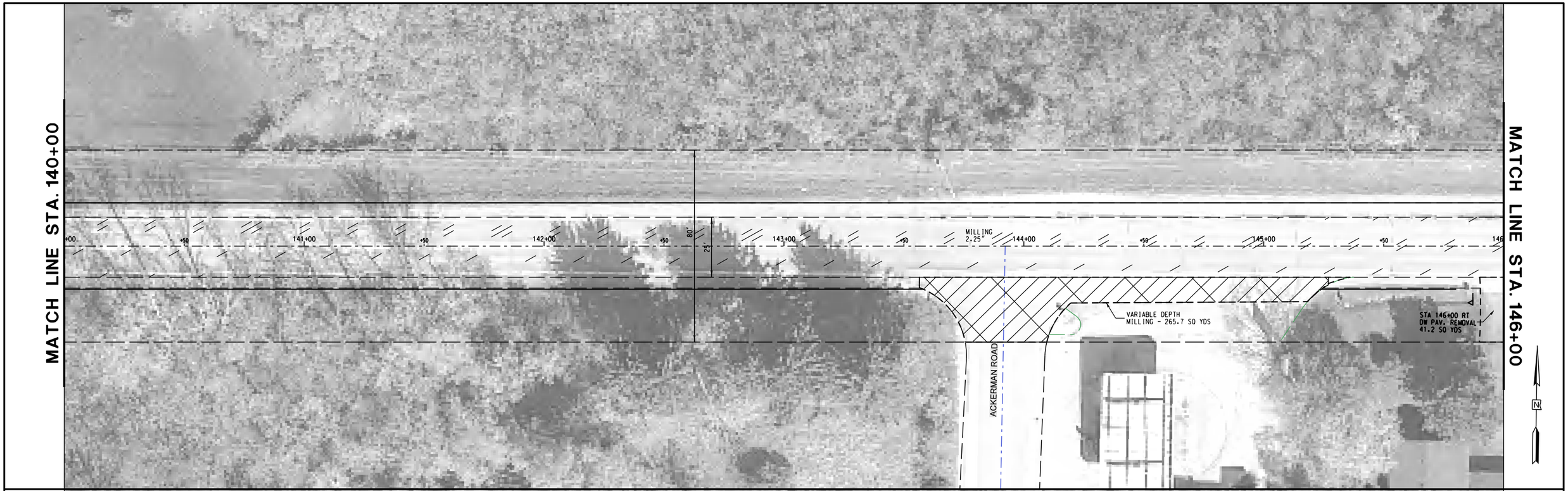

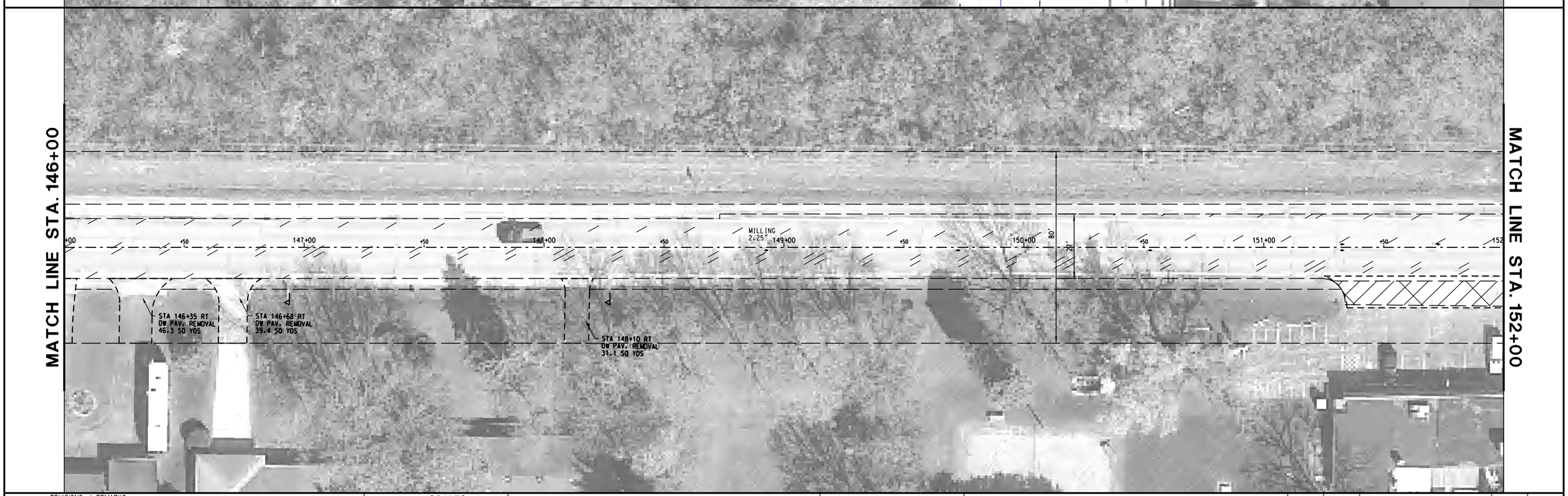

REVISIONS / REMARKS					
NO.	DESCRIPTION	DATE	BY	SURVEYOR:	/
		/ /		DSGNR/LIAISON:	
		/ /		PLOTTED BY:	hdmxb 5/28/2015

SCALES
VERT 5 0
HORIZ. 0 20 40

GRASS LAKE ROAD RESURFACING

LakeCounty
Division of Transportation

REMOVAL SHEET

STA. 140+00.00 TO 152+00.00

ROUTE	SECTION	SECTION NUMBER	SHEET	SHEETS
CH18	59	14-00059-09-RS	23	85

FILE NAME: U:\Design\Burke\14-00059-09-RS Grass Lake Road Resurfacing\Grass Lake Rd Resurfacing (E of Bridge to IL Rt 59)\Grass Lake Working files\14-00059-09-RS master.dgn

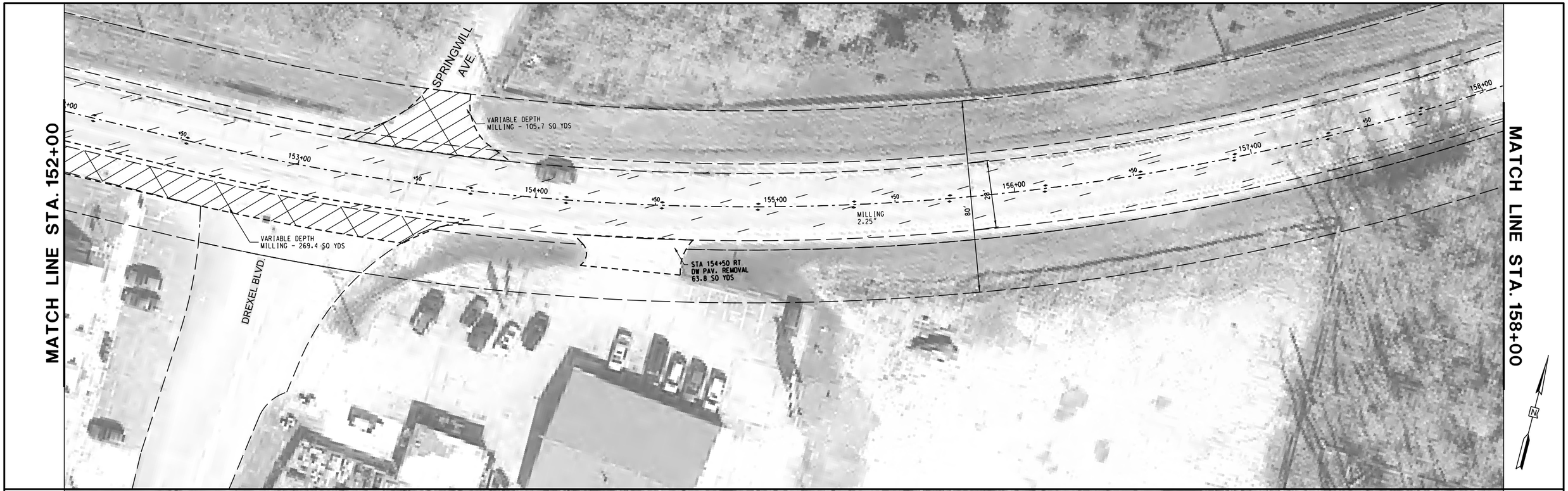

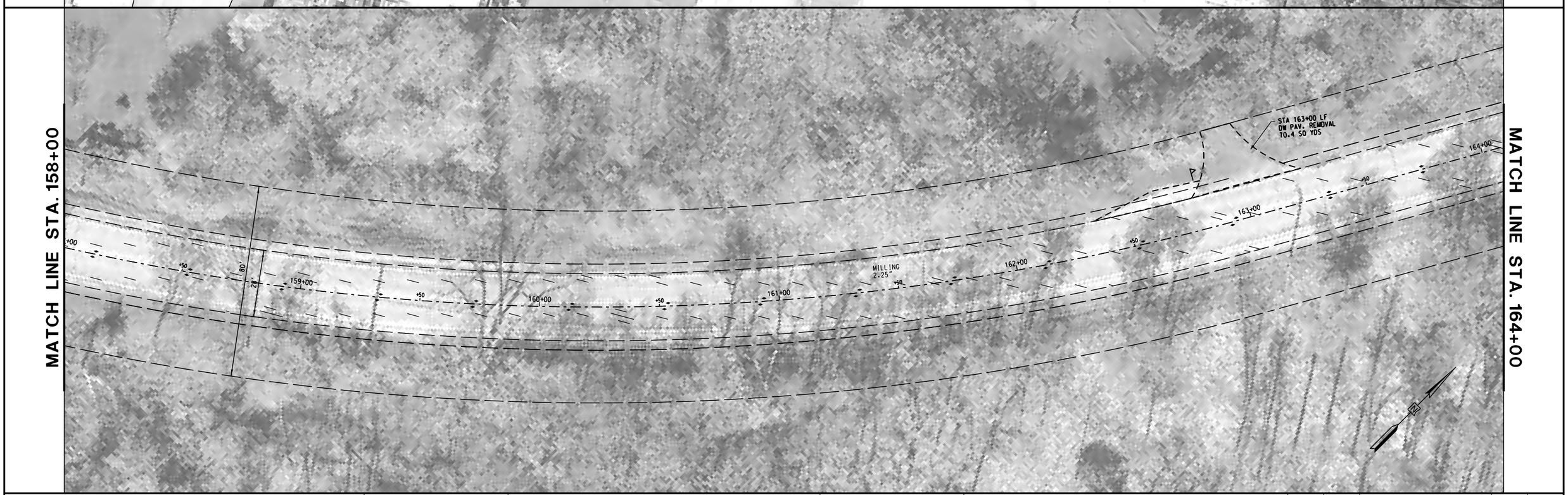

REVISIONS / REMARKS					
NO.	DESCRIPTION	DATE	BY	SURVEYOR:	/
		/ /		DSGNR/LIAISON:	
		/ /		PLOTTED BY:	hdmxb 5/28/2015

SCALES
VERT. 5 0
HORIZ. 0 20 40

GRASS LAKE ROAD RESURFACING

LakeCounty
Division of Transportation

REMOVAL SHEET

STA. 152+00.00 TO 164+00.00

ROUTE	SECTION	SECTION NUMBER	SHEET	SHEETS
CH18	59	14-00059-09-RS	24	85

FILE NAME: U:\Design\Burke\14-00059-09-RS Grass Lake Road Resurfacing\Grass Lake Rd Resurfacing (E of Bridge to IL Rt 59)\Grass Lake Working files\14-00059-09-RS master.dgn

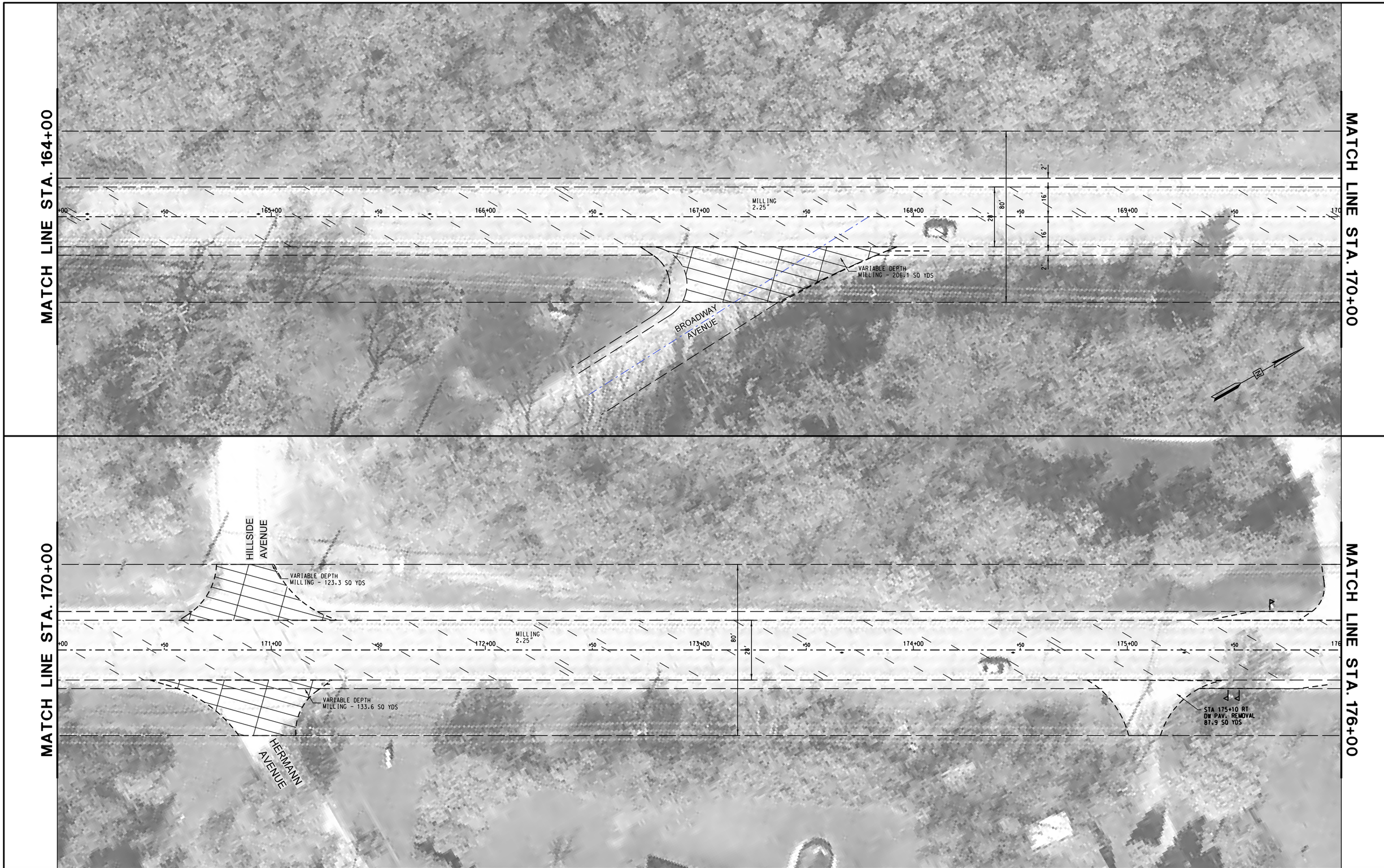

REVISIONS / REMARKS					
NO.	DESCRIPTION	DATE	BY	SURVEYOR:	/
		/ /		DSGNR/LIAISON:	
		/ /		PLOTTED BY:	hdmxb 5/28/2015

SCALES
VERT 5 0
HORIZ. 0 20 40

GRASS LAKE ROAD RESURFACING

LakeCounty
Division of Transportation

REMOVAL SHEET

STA. 164+00.00 TO 176+00.00

ROUTE	SECTION	SECTION NUMBER	SHEET	SHEETS
CH18	59	14-00059-09-RS	25	85

FILE NAME: U:\Design\Burke\14-00059-09-RS Grass Lake Road Resurfacing\Grass Lake Rd Resurfacing (E of Bridge to IL Rt 59)\Grass Lake Working files\14-00059-09-RS master.dgn

MATCH LINE STA. 176+00

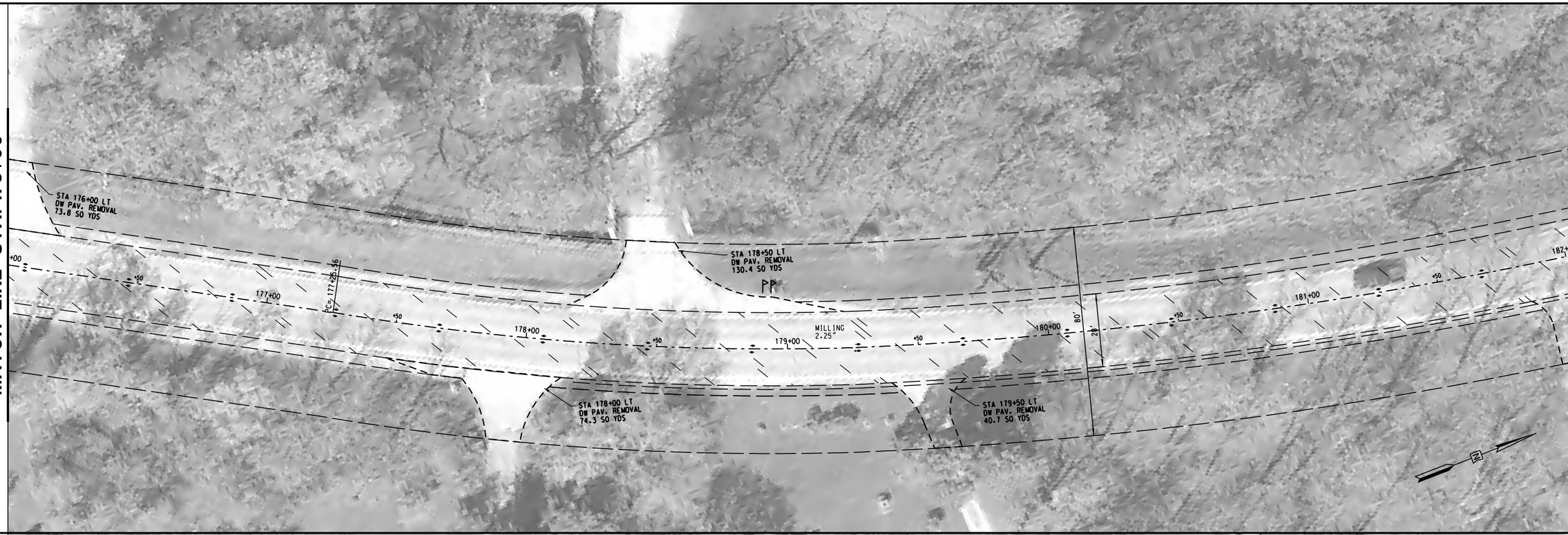

MATCH LINE STA. 182+00

MATCH LINE STA. 182+00

MATCH LINE STA. 188+00

REVISIONS / REMARKS					
NO.	DESCRIPTION	DATE	BY	SURVEYOR:	/
		/ /		DSGNR/LIAISON:	
		/ /		PLOTTED BY:	hdmxb 5/28/2015

SCALES
VERT 5 0
HORIZ. 0 20 40

GRASS LAKE ROAD RESURFACING

LakeCounty
Division of Transportation

REMOVAL SHEET

STA. 176+00.00 TO 188+00.00

ROUTE	SECTION	SECTION NUMBER	SHEET	SHEETS
CH18	59	14-00059-09-RS	26	85

FILE NAME: U:\Design\Burke\14-00059-09-RS Grass Lake Road Resurfacing\Grass Lake Rd Resurfacing (E of Bridge to IL Rt 59)\Grass Lake Working files\14-00059-09-RS master.dgn

REVISIONS / REMARKS					
NO.	DESCRIPTION	DATE	BY	SURVEYOR:	/
		/ /		DSGNR/LIAISON:	
		/ /		PLOTTED BY:	hdmxb 5/28/2015

SCALES
VERT. 5 0
HORIZ. 0 20 40

GRASS LAKE ROAD RESURFACING

LakeCounty
Division of Transportation

REMOVAL SHEET

STA. 188+00.00 TO 200+00.00

ROUTE	SECTION	SECTION NUMBER	SHEET	SHEETS
CH18	59	14-00059-09-RS	27	85

FILE NAME: U:\Design\Burke\14-00059-09-RS Grass Lake Road Resurfacing\Grass Lake Rd Resurfacing (E of Bridge to IL Rt 59)\Grass Lake Working files\14-00059-09-RS master.dgn

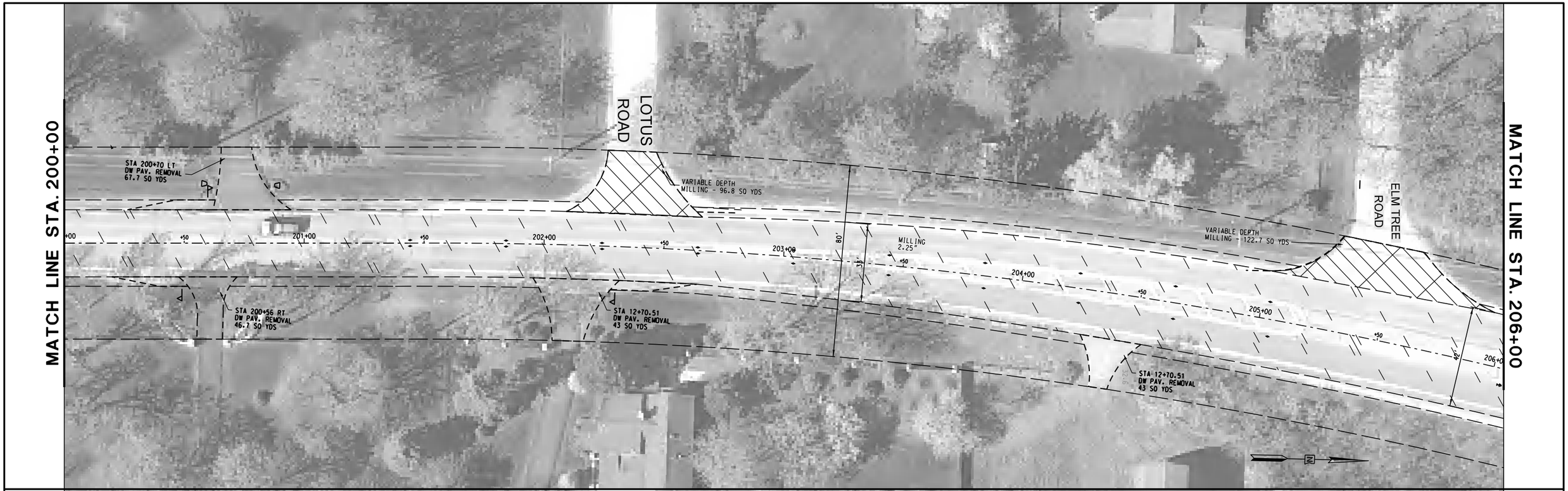

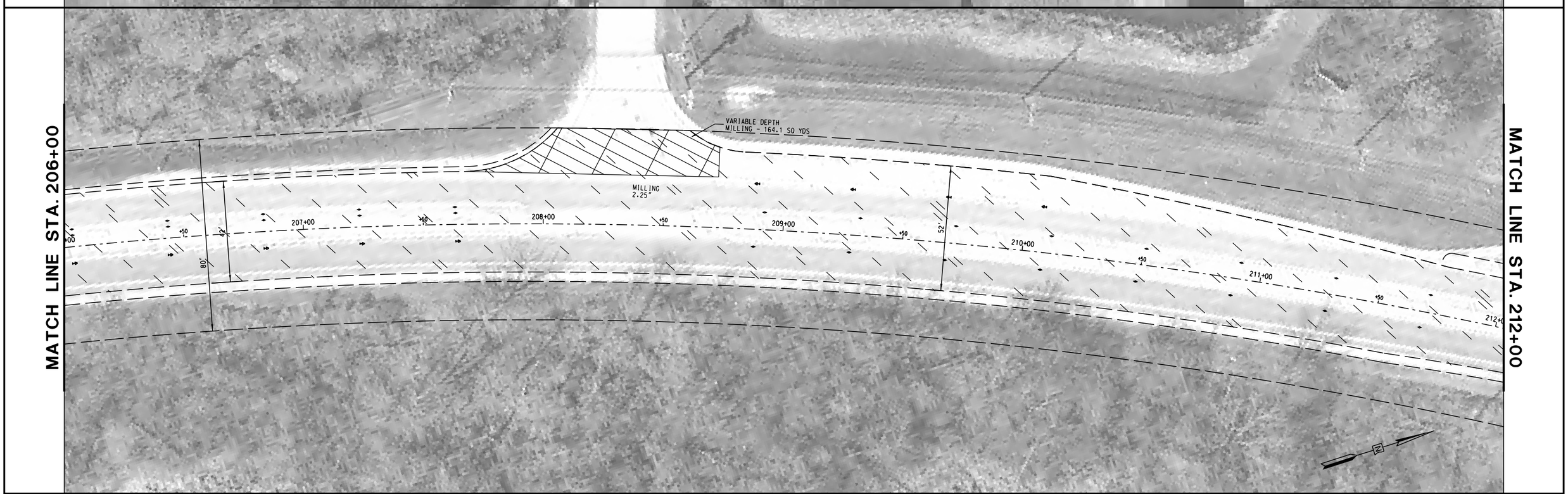

REVISIONS / REMARKS					
NO.	DESCRIPTION	DATE	BY	SURVEYOR:	/
		/ /		DSGNR/LIAISON:	
		/ /		PLOTTED BY:	hdmxb 5/28/2015

SCALES
VERT 5 0
HORIZ. 0 20 40

GRASS LAKE ROAD RESURFACING

LakeCounty
Division of Transportation

REMOVAL SHEET

STA. 200+00.00 TO 212+00.00

ROUTE	SECTION	SECTION NUMBER	SHEET	SHEETS
CH18	59	14-00059-09-RS	28	85

FILE NAME: U:\Design\Burke\14-00059-09-RS Grass Lake Road Resurfacing\Grass Lake Rd Resurfacing (E of Bridge to IL Rt 59)\Grass Lake Working files\14-00059-09-RS master.dgn

MATCH LINE STA. 212+00

MATCH LINE STA. 218+00

MATCH LINE STA. 218+00

MATCH LINE STA. 224+00

REVISIONS / REMARKS					
NO.	DESCRIPTION	DATE	BY	SURVEYOR:	/
		/ /		DSGNR/LIAISON:	
		/ /		PLOTTED BY:	hdmxb 5/28/2015

SCALES
VERT. 0 5
HORIZ. 0 20 40

GRASS LAKE ROAD RESURFACING

LakeCounty
Division of Transportation

REMOVAL SHEET

STA. 212+00.00 TO 224+00.00

ROUTE	SECTION	SECTION NUMBER	SHEET	SHEETS
CH18	59	14-00059-09-RS	29	85

FILE NAME: U:\Design\Burke\14-00059-09-RS Grass Lake Road Resurfacing\Grass Lake Rd Resurfacing (E of Bridge to IL Rt 59)\Grass Lake Working files\14-00059-09-RS master.dgn

REVISIONS / REMARKS					
NO.	DESCRIPTION	DATE	BY	SURVEYOR:	/
		/ /		DSGNR/LIAISON:	
		/ /		PLOTTED BY:	hdmxb 5/28/2015

VERT 5 0 — SCALES HORIZ. 0 20 40

GRASS LAKE ROAD RESURFACING

LakeCounty Division of Transportation

REMOVAL SHEET

STA. 224+00.00 TO 236+00.00

ROUTE	SECTION	SECTION NUMBER	SHEET	SHEETS
CH18	59	14-00059-09-RS	30	85

FILE NAME: U:\Design\Burke\14-00059-09-RS Grass Lake Road Resurfacing\Grass Lake Rd Resurfacing (E of Bridge to IL Rt 59)\Grass Lake Working files\14-00059-09-RS master.dgn

REVISIONS / REMARKS					
NO.	DESCRIPTION	DATE	BY	SURVEYOR:	/
		/ /		DSGNR/LIAISON:	
		/ /		PLOTTED BY:	hdmxb 5/28/2015

SCALES
VERT 0 5
HORIZ. 0 20 40

GRASS LAKE ROAD RESURFACING

LakeCounty
Division of Transportation

REMOVAL SHEET

STA. 236+00.00 TO 248+00.00

ROUTE	SECTION	SECTION NUMBER	SHEET	SHEETS
CH18	59	14-00059-09-RS	31	85

FILE NAME: U:\Design\Burke\14-00059-09-RS Grass Lake Road Resurfacing\Grass Lake Rd Resurfacing (E of Bridge to IL Rt 59)\Grass Lake Working files\14-00059-09-RS master.dgn

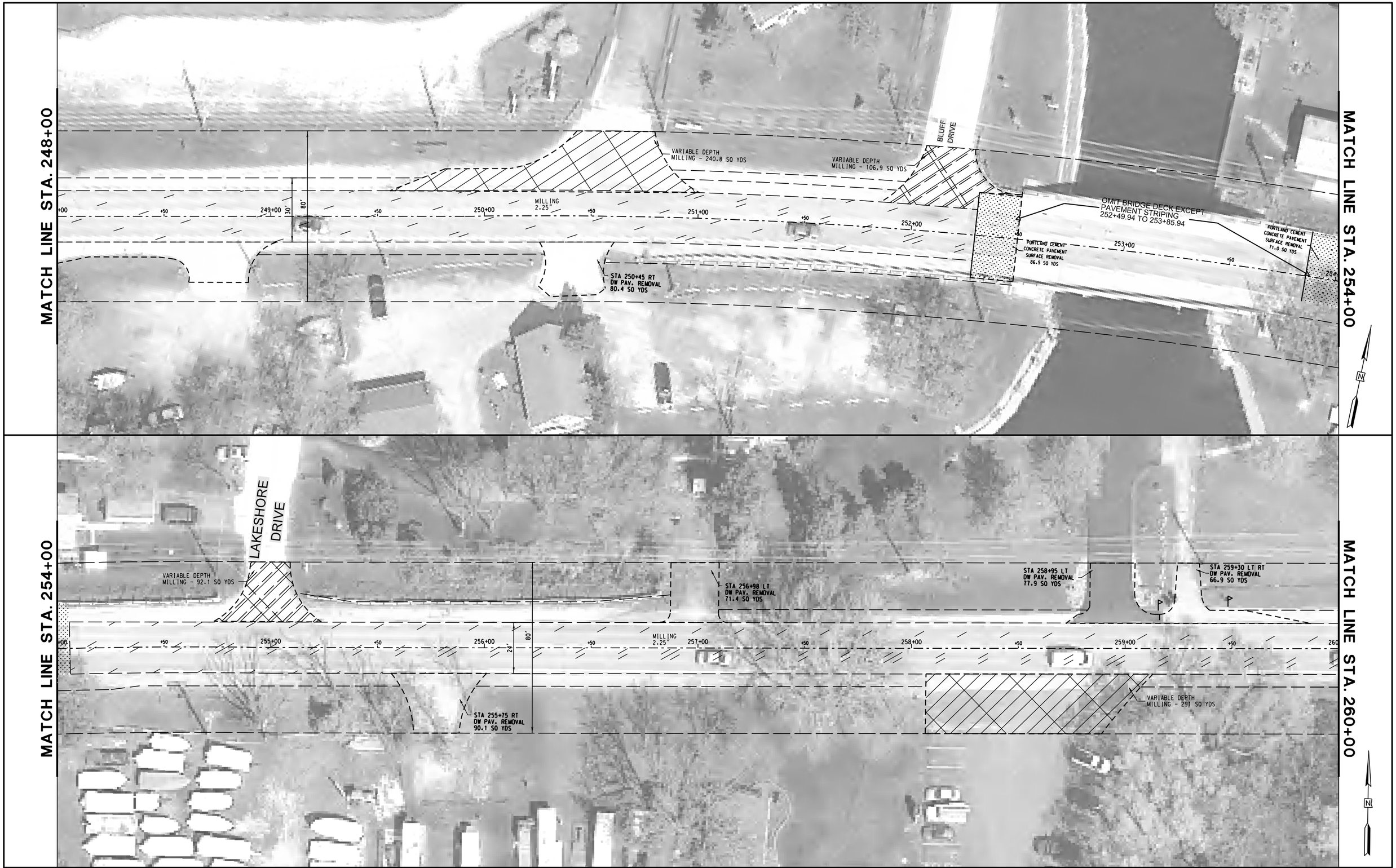

REVISIONS / REMARKS					
NO.	DESCRIPTION	DATE	BY	SURVEYOR:	/
		/ /		DSGNR/LIAISON:	
		/ /		PLOTTED BY:	hdmxb 5/28/2015

SCALES
VERT 5 0
HORIZ. 0 20 40

GRASS LAKE ROAD RESURFACING

LakeCounty
Division of Transportation

REMOVAL SHEET

STA. 248+00.00 TO 260+00.00

ROUTE	SECTION	SECTION NUMBER	SHEET	SHEETS
CH18	59	14-00059-09-RS	32	85

FILE NAME: U:\Design\Burke\14-00059-09-RS Grass Lake Road Resurfacing\Grass Lake Rd Resurfacing (E of Bridge to IL Rt 59)\Grass Lake Working files\14-00059-09-RS master.dgn

REVISIONS / REMARKS					
NO.	DESCRIPTION	DATE	BY	SURVEYOR:	/
		/ /		DSGNR/LIAISON:	
		/ /		PLOTTED BY:	hdmxb 5/28/2015

SCALES
VERT 5 0
HORIZ. 0 20 40

GRASS LAKE ROAD RESURFACING

LakeCounty
Division of Transportation

REMOVAL SHEET

STA. 260+00.00 TO 272+00.00

ROUTE	SECTION	SECTION NUMBER	SHEET	SHEETS
CH18	59	14-00059-09-RS	33	85

FILE NAME: U:\Design\Burke\14-00059-09-RS Grass Lake Road Resurfacing\Grass Lake Rd Resurfacing (E of Bridge to IL Rt 59)\Grass Lake Working files\14-00059-09-RS master.dgn

REVISIONS / REMARKS					
NO.	DESCRIPTION	DATE	BY	SURVEYOR:	/
		/ /		DSGNR/LIAISON:	
		/ /		PLOTTED BY:	hdmxb 5/28/2015

SCALES
VERT 5 0
HORIZ. 0 20 40

GRASS LAKE ROAD RESURFACING

LakeCounty
Division of Transportation

REMOVAL SHEET

STA. 272+00.00 TO 284+00.00

ROUTE	SECTION	SECTION NUMBER	SHEET	SHEETS
CH18	59	14-00059-09-RS	34	85

FILE NAME: U:\Design\Burke\14-00059-09-RS Grass Lake Road Resurfacing\Grass Lake Rd Resurfacing (E of Bridge to IL Rt 59)\Grass Lake Working files\14-00059-09-RS master.dgn

REVISIONS / REMARKS					
NO.	DESCRIPTION	DATE	BY	SURVEYOR:	/
		/ /		DSGNR/LIAISON:	
		/ /		PLOTTED BY:	hdmxb 5/28/2015

SCALES
VERT. 0 5
HORIZ. 0 20 40

GRASS LAKE ROAD RESURFACING

LakeCounty
Division of Transportation

REMOVAL SHEET

STA. 284+00.00 TO 291+00.00

ROUTE	SECTION	SECTION NUMBER	SHEET	SHEETS
CH18	59	14-00059-09-RS	35	85

FILE NAME: U:\Design\Burke\14-00059-09-RS Grass Lake Road Resurfacing\Grass Lake Rd Resurfacing (E of Bridge to IL Rt 59)\Grass Lake Working files\14-00059-09-RS master.dgn

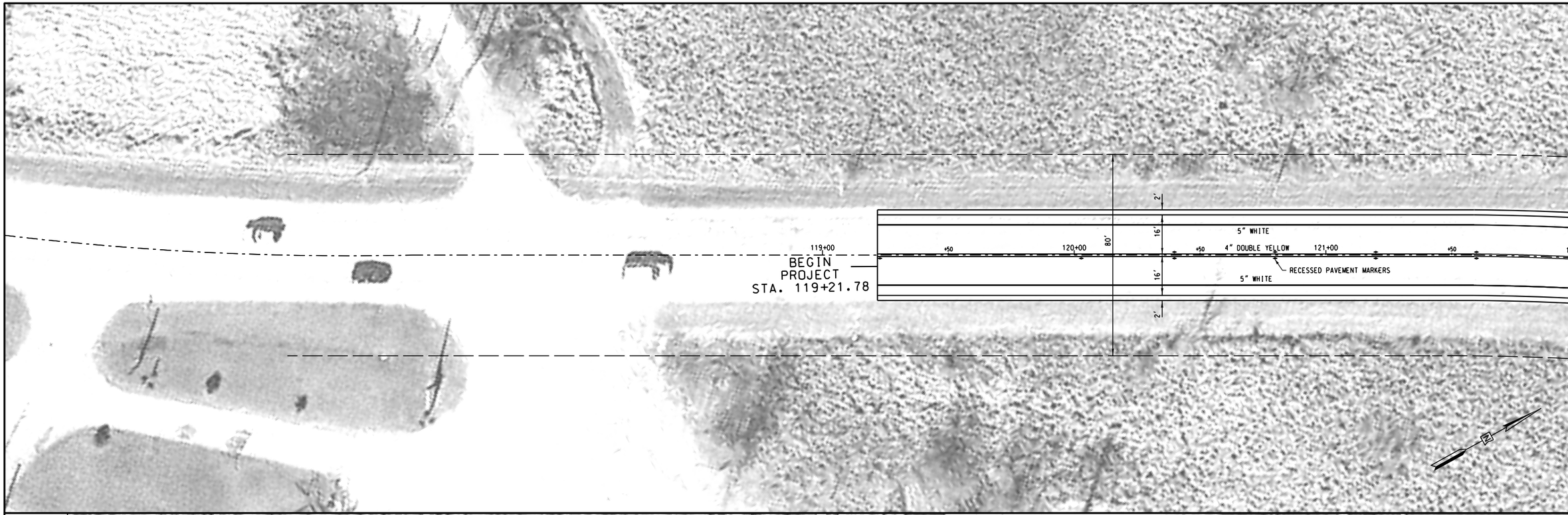

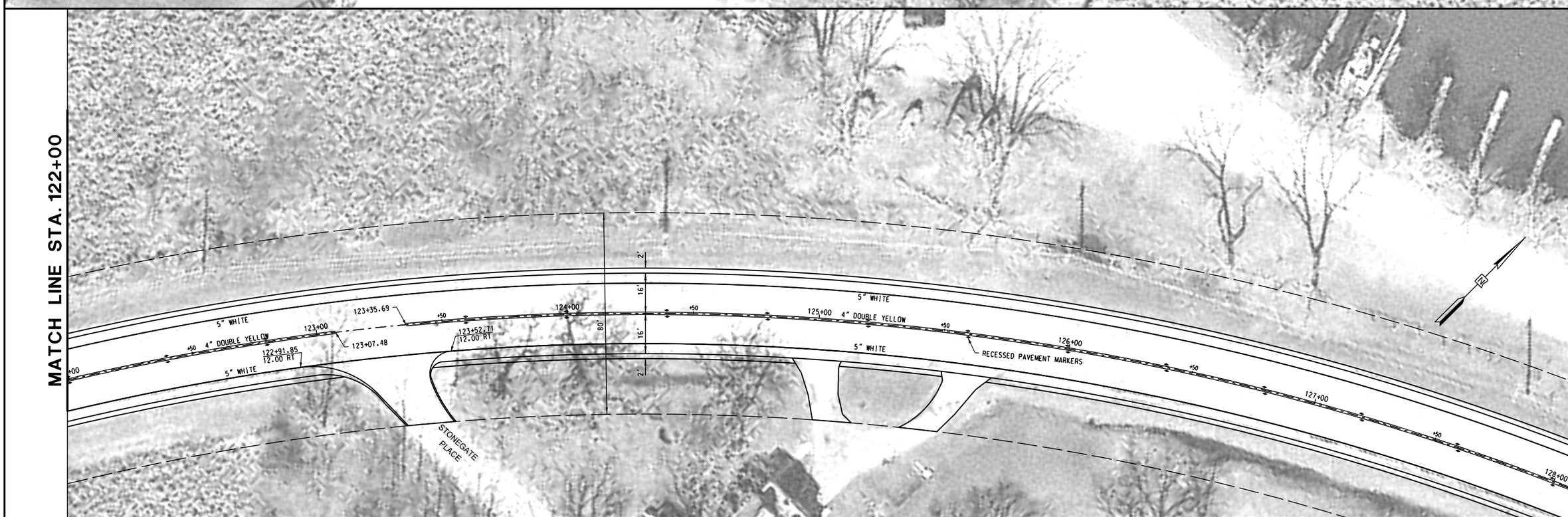

REVISIONS / REMARKS					
NO.	DESCRIPTION	DATE	BY	SURVEYOR:	/
		/ /		DSGNR/LIAISON:	
		/ /		PLOTTED BY:	hdmxb 5/28/2015

SCALES
VERT 5 0
HORIZ. 0 20 40

GRASS LAKE ROAD RESURFACING

LakeCounty
Division of Transportation

PLAN SHEET

STA. 116+00.00 TO 128+00.00

ROUTE	SECTION	SECTION NUMBER	SHEET	SHEETS
CH18	59	14-00059-09-RS	36	85

FILE NAME: U:\Design\Burke\14-00059-09-RS Grass Lake Road Resurfacing\Grass Lake Rd Resurfacing (E of Bridge to IL Rt 59)\Grass Lake Working files\14-00059-09-RS master.dgn

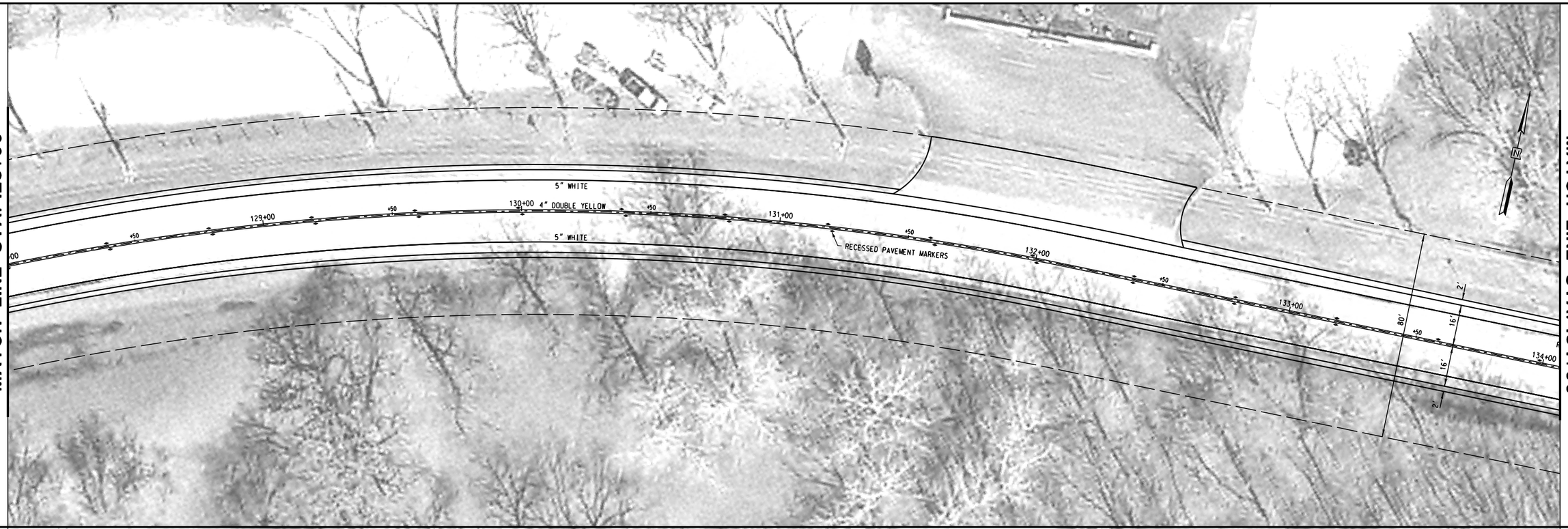

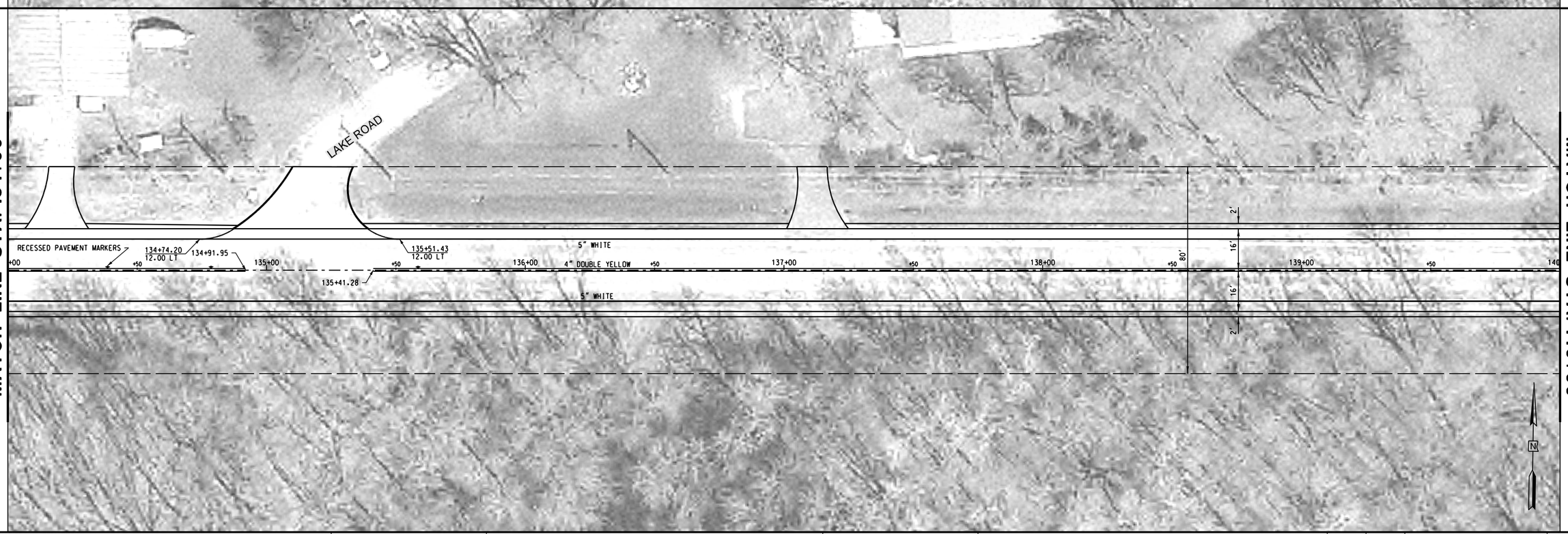

REVISIONS / REMARKS					
NO.	DESCRIPTION	DATE	BY	SURVEYOR:	/
		/ /		DSGNR/LIAISON:	
		/ /		PLOTTED BY:	hdmxb 5/28/2015

SCALES
VERT 5 0
HORIZ. 0 20 40

GRASS LAKE ROAD RESURFACING

LakeCounty
Division of Transportation

PLAN SHEET

STA. 128+00.00 TO 140+00.00

ROUTE	SECTION	SECTION NUMBER	SHEET	SHEETS
CH18	59	14-00059-09-RS	37	85

FILE NAME: U:\Design\Burke\14-00059-09-RS Grass Lake Road Resurfacing\Grass Lake Rd Resurfacing (E of Bridge to IL Rt 59)\Grass Lake Working files\14-00059-09-RS master.dgn

REVISIONS / REMARKS					
NO.	DESCRIPTION	DATE	BY	SURVEYOR:	/
		/ /		DSGNR/LIAISON:	
		/ /		PLOTTED BY:	hdmxb 5/28/2015

SCALES
VERT 5 0
HORIZ. 0 20 40

GRASS LAKE ROAD RESURFACING

LakeCounty
Division of Transportation

PLAN SHEET

STA. 140+00.00 TO 152+00.00

ROUTE	SECTION	SECTION NUMBER	SHEET	SHEETS
CH18	59	14-00059-09-RS	38	85

FILE NAME: U:\Design\Burke\14-00059-09-RS Grass Lake Road Resurfacing\Grass Lake Rd Resurfacing (E of Bridge to IL Rt 59)\Grass Lake Working files\14-00059-09-RS master.dgn

MATCH LINE STA. 152+00

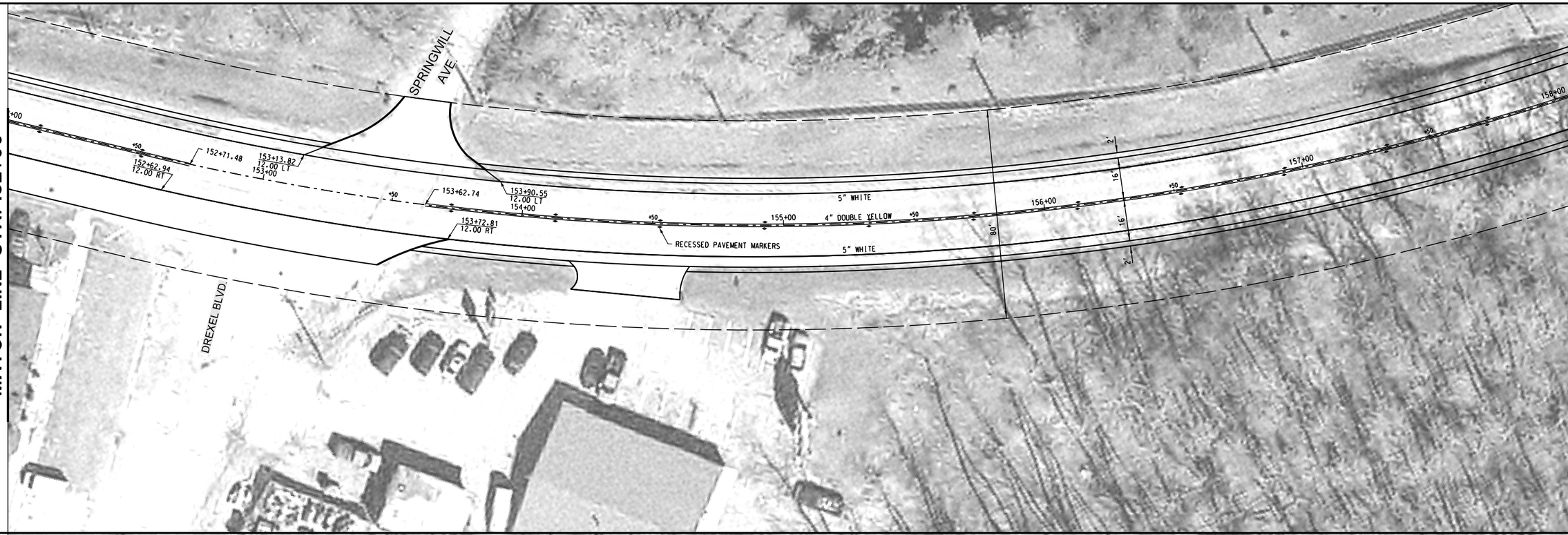

MATCH LINE STA. 158+00

MATCH LINE STA. 158+00

MATCH LINE STA. 164+00

REVISIONS / REMARKS					
NO.	DESCRIPTION	DATE	BY	SURVEYOR:	/
		/ /		DSGNR/LIAISON:	
		/ /		PLOTTED BY:	hdmxb 5/28/2015

SCALES
VERT 5 0
HORIZ. 0 20 40

GRASS LAKE ROAD RESURFACING

LakeCounty
Division of Transportation

PLAN SHEET

STA. 152+00.00 TO 164+00.00

ROUTE	SECTION	SECTION NUMBER	SHEET	SHEETS
CH18	59	14-00059-09-RS	39	85

FILE NAME: U:\Design\Burke\14-00059-09-RS Grass Lake Road Resurfacing\Grass Lake Rd Resurfacing (E of Bridge to IL Rt 59)\Grass Lake Working files\14-00059-09-RS master.dgn

REVISIONS / REMARKS					
NO.	DESCRIPTION	DATE	BY	SURVEYOR:	/
		/ /		DSGNR/LIAISON:	
		/ /		PLOTTED BY:	hdmxb 5/28/2015

SCALES
VERT 5 0
HORIZ. 0 20 40

GRASS LAKE ROAD RESURFACING

LakeCounty
Division of Transportation

PLAN SHEET

STA. 164+00.00 TO 176+00.00

ROUTE	SECTION	SECTION NUMBER	SHEET	SHEETS
CH18	59	14-00059-09-RS	40	85

FILE NAME: U:\Design\Burke\14-00059-09-RS Grass Lake Road Resurfacing\Grass Lake Rd Resurfacing (E of Bridge to IL Rt 59)\Grass Lake Working files\14-00059-09-RS master.dgn

REVISIONS / REMARKS					
NO.	DESCRIPTION	DATE	BY	SURVEYOR:	/
		/ /		DSGNR/LIAISON:	
		/ /		PLOTTED BY:	hdmxb 5/28/2015

SCALES
VERT 5 0
HORIZ. 0 20 40

GRASS LAKE ROAD RESURFACING

LakeCounty
Division of Transportation

PLAN SHEET

STA. 176+00.00 TO 188+00.00

ROUTE	SECTION	SECTION NUMBER	SHEET	SHEETS
CH18	59	14-00059-09-RS	41	85

FILE NAME: U:\Design\Burke\14-00059-09-RS Grass Lake Road Resurfacing\Grass Lake Rd Resurfacing (E of Bridge to IL Rt 59)\Grass Lake Working files\14-00059-09-RS master.dgn

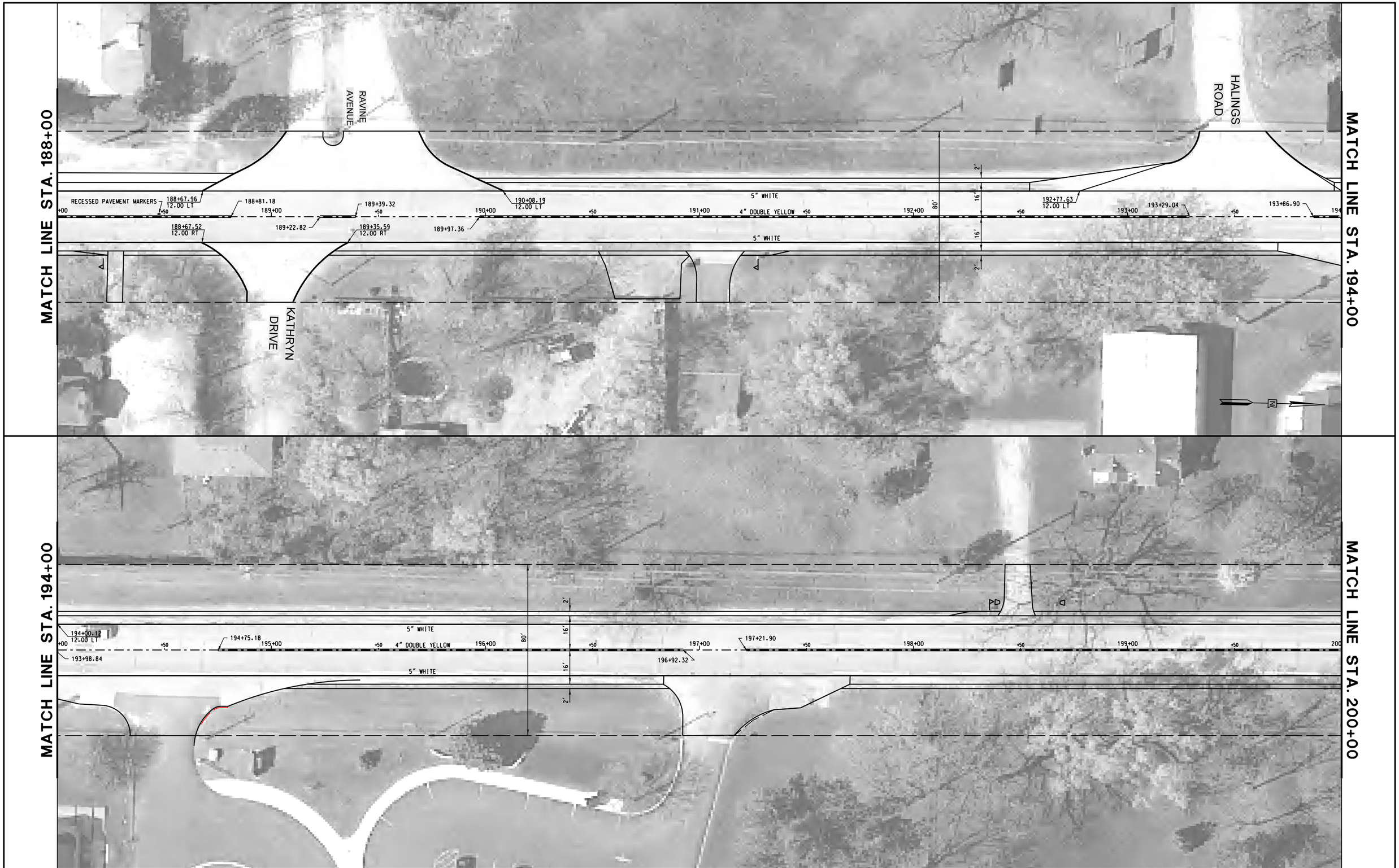

REVISIONS / REMARKS					
NO.	DESCRIPTION	DATE	BY	SURVEYOR:	/
		/ /		DSGNR/LIAISON:	
		/ /		PLOTTED BY:	hdmxb 5/28/2015

SCALES
VERT. 5 0
HORIZ. 0 20 40

GRASS LAKE ROAD RESURFACING

LakeCounty
Division of Transportation

PLAN SHEET
STA. 188+00.00 TO 200+00.00

ROUTE	SECTION	SECTION NUMBER	SHEET	SHEETS
CH18	59	14-00059-09-RS	42	85

FILE NAME: U:\Design\Burke\14-00059-09-RS Grass Lake Road Resurfacing\Grass Lake Rd Resurfacing (E of Bridge to IL Rt 59)\Grass Lake Working files\14-00059-09-RS master.dgn

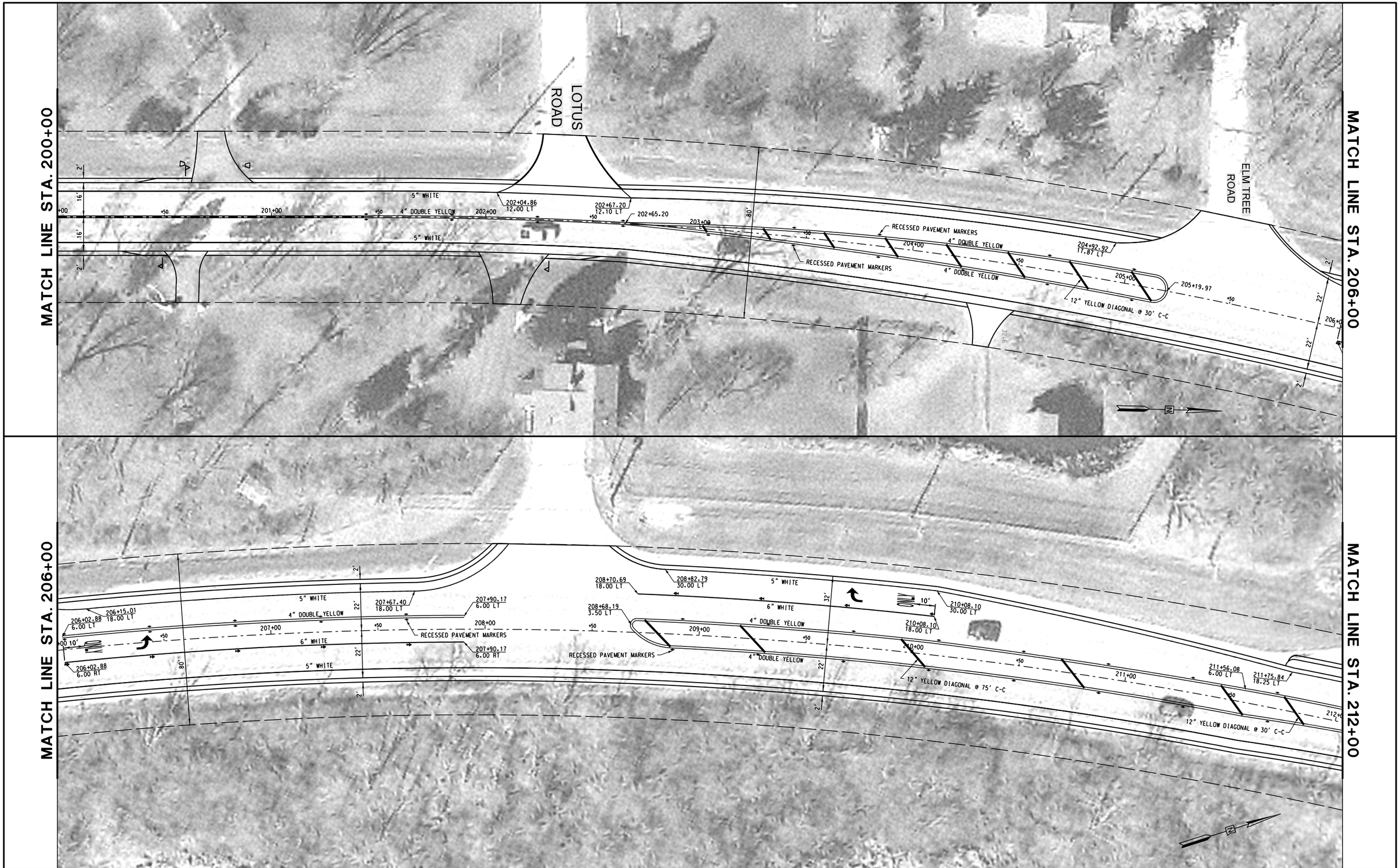

REVISIONS / REMARKS						
NO.	DESCRIPTION	DATE	BY	SURVEYOR:	/	
		/ /		DSGNR/LIAISON:		
		/ /		PLOTTED BY:	hdmxb 5/28/2015	

SCALES
VERT 5 0
HORIZ. 0 20 40

GRASS LAKE ROAD RESURFACING

LakeCounty Division of Transportation

PLAN SHEET

STA. 200+00.00 TO 212+00.00

ROUTE	SECTION	SECTION NUMBER	SHEET	SHEETS
CH18	59	14-00059-09-RS	43	85

FILE NAME: U:\Design\Burke\14-00059-09-RS Grass Lake Road Resurfacing\Grass Lake Rd Resurfacing (E of Bridge to IL Rt 59)\Grass Lake Working files\14-00059-09-RS master.dgn

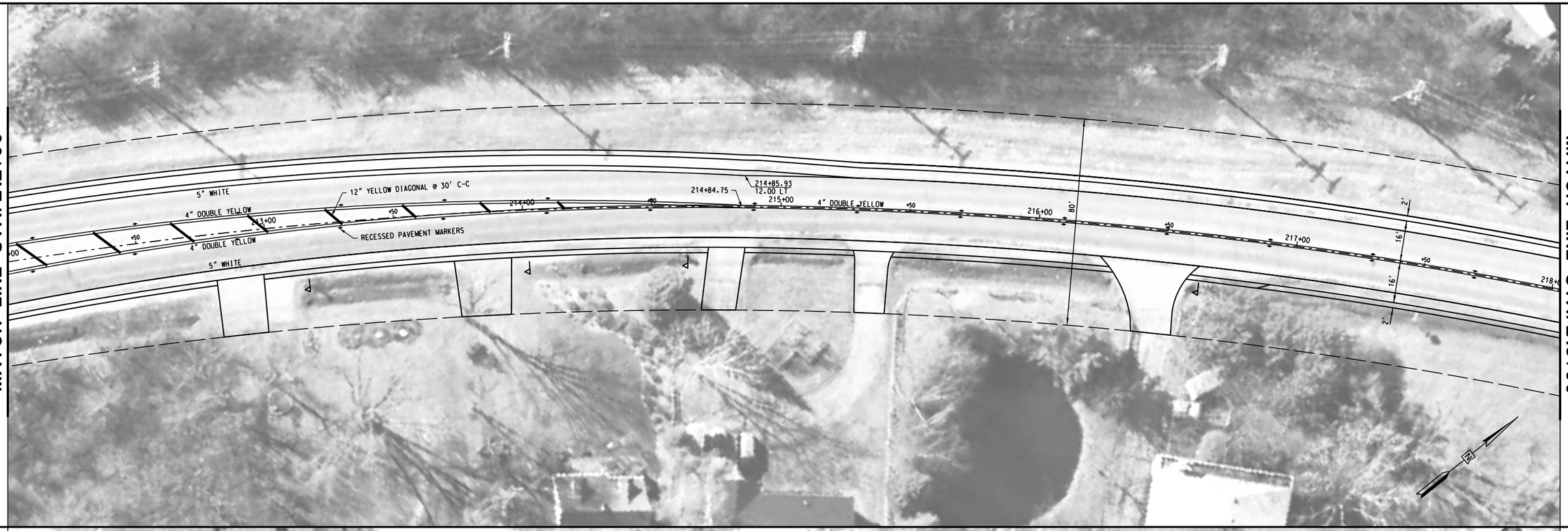

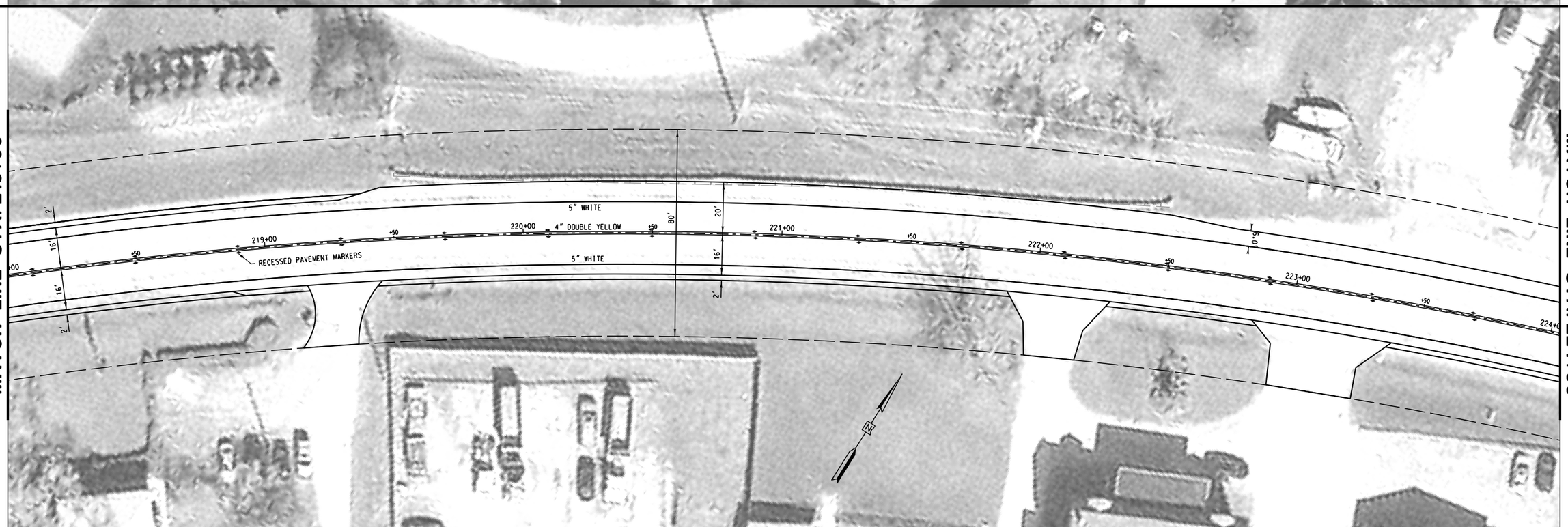

REVISIONS / REMARKS					
NO.	DESCRIPTION	DATE	BY	SURVEYOR:	/
		/ /		DSGNR/LIAISON:	
		/ /		PLOTTED BY:	hdmxb 5/28/2015

SCALES
VERT. 0 5
HORIZ. 0 20 40

GRASS LAKE ROAD RESURFACING

LakeCounty
Division of Transportation

PLAN SHEET

STA. 212+00.00 TO 224+00.00

ROUTE	SECTION	SECTION NUMBER	SHEET	SHEETS
CH18	59	14-00059-09-RS	44	85

FILE NAME: U:\Design\Burke\14-00059-09-RS Grass Lake Road Resurfacing\Grass Lake Rd Resurfacing (E of Bridge to IL Rt 59)\Grass Lake Working files\14-00059-09-RS master.dgn

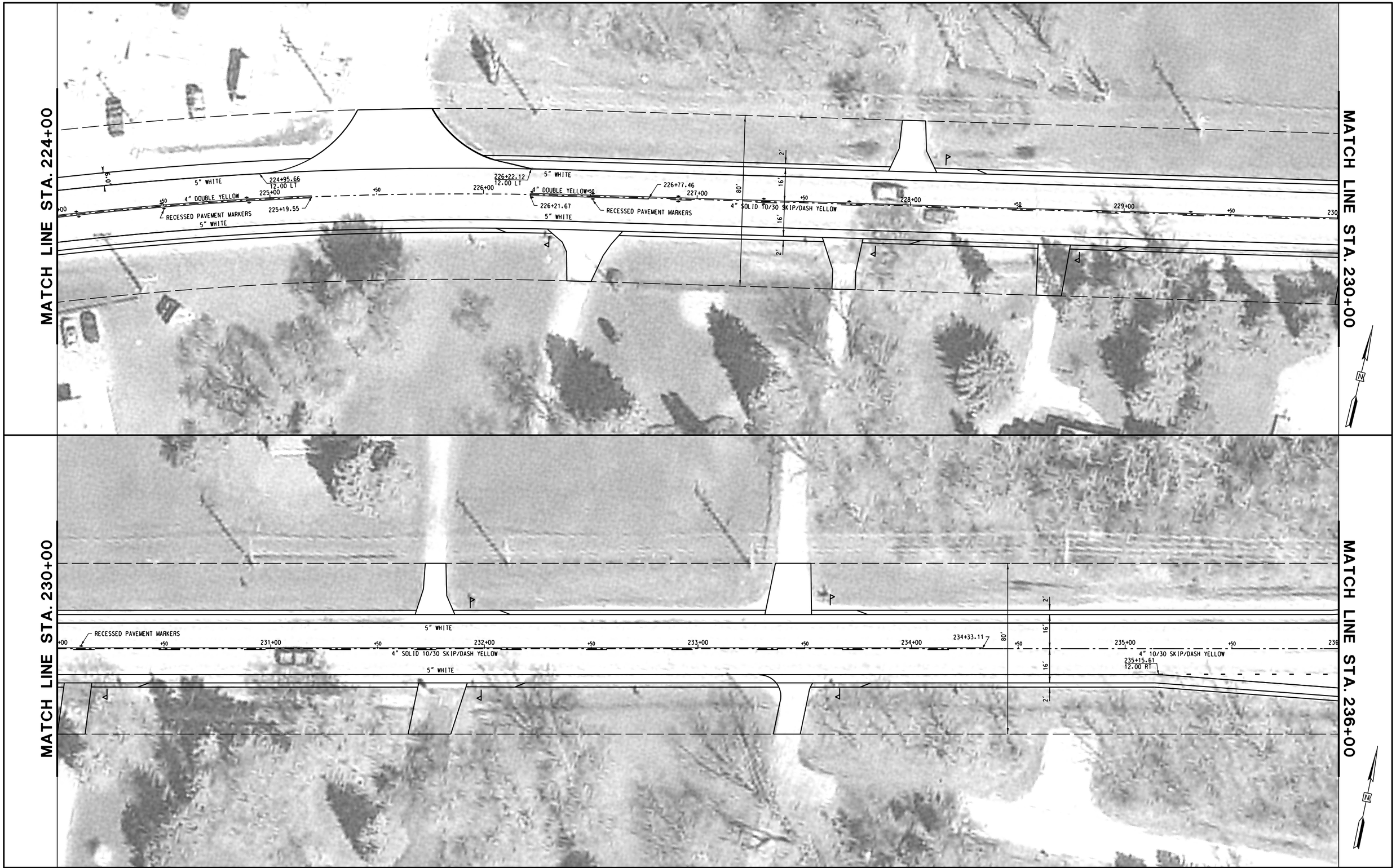

REVISIONS / REMARKS					
NO.	DESCRIPTION	DATE	BY	SURVEYOR:	/
		/ /		DSGNR/LIAISON:	
		/ /		PLOTTED BY:	hdmxb 5/28/2015

SCALES
VERT 0 5
HORIZ. 0 20 40

GRASS LAKE ROAD RESURFACING

LakeCounty
Division of Transportation

PLAN SHEET

STA. 224+00.00 TO 236+00.00

ROUTE	SECTION	SECTION NUMBER	SHEET	SHEETS
CH18	59	14-00059-09-RS	45	85

FILE NAME: U:\Design\Burke\14-00059-09-RS Grass Lake Road Resurfacing\Grass Lake Rd Resurfacing (E of Bridge to IL Rt 59)\Grass Lake Working files\14-00059-09-RS master.dgn

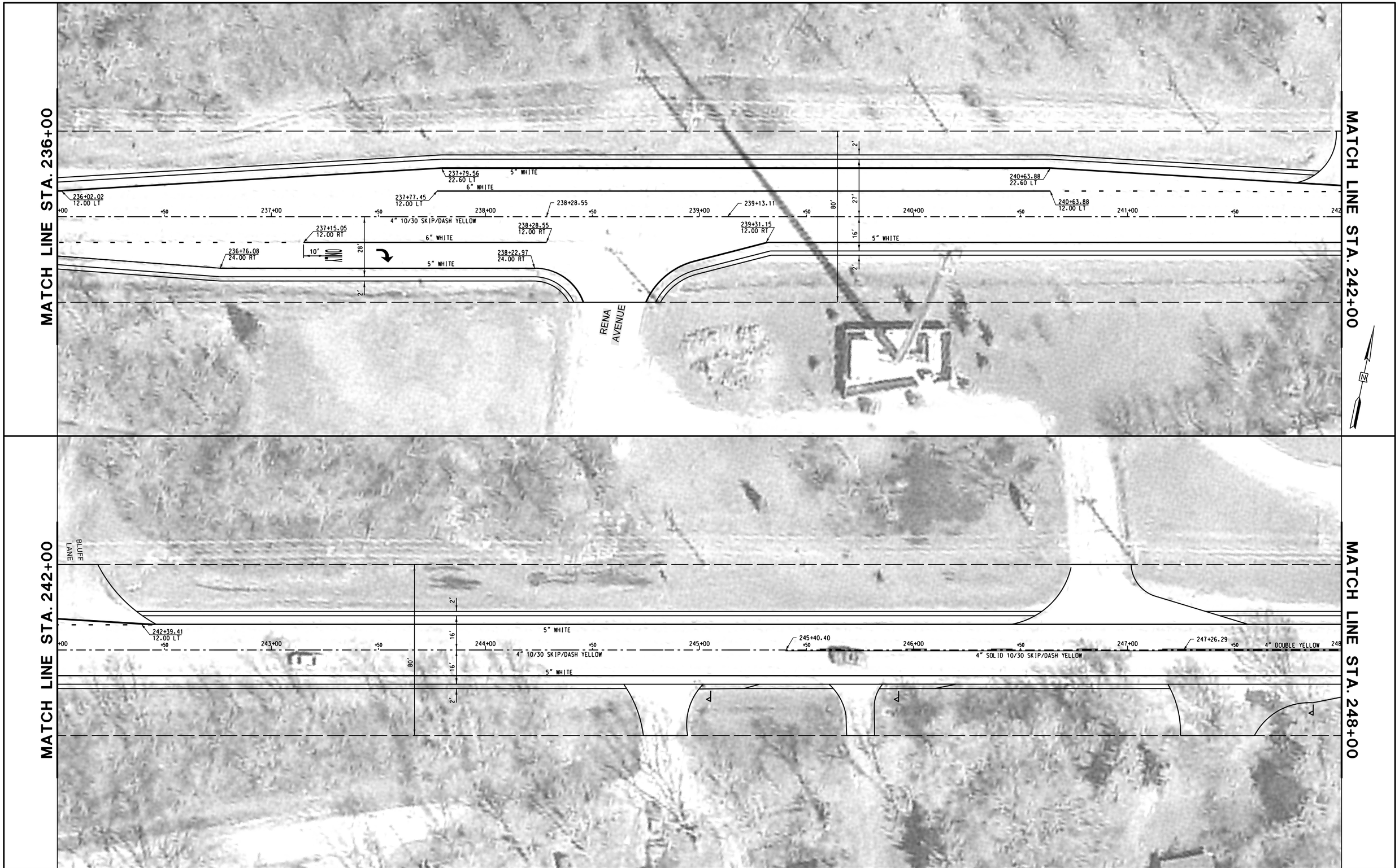

REVISIONS / REMARKS					
NO.	DESCRIPTION	DATE	BY	SURVEYOR:	/
		/ /		DSGNR/LIAISON:	
		/ /		PLOTTED BY:	hdmxb 5/28/2015

SCALES
VERT 0 5
HORIZ. 0 20 40

GRASS LAKE ROAD RESURFACING

LakeCounty
Division of Transportation

PLAN SHEET

STA. 236+00.00 TO 248+00.00

ROUTE	SECTION	SECTION NUMBER	SHEET	SHEETS
CH18	59	14-00059-09-RS	46	85

FILE NAME: U:\Design\Burke\14-00059-09-RS Grass Lake Road Resurfacing\Grass Lake Rd Resurfacing (E of Bridge to IL Rt 59)\Grass Lake Working files\14-00059-09-RS master.dgn

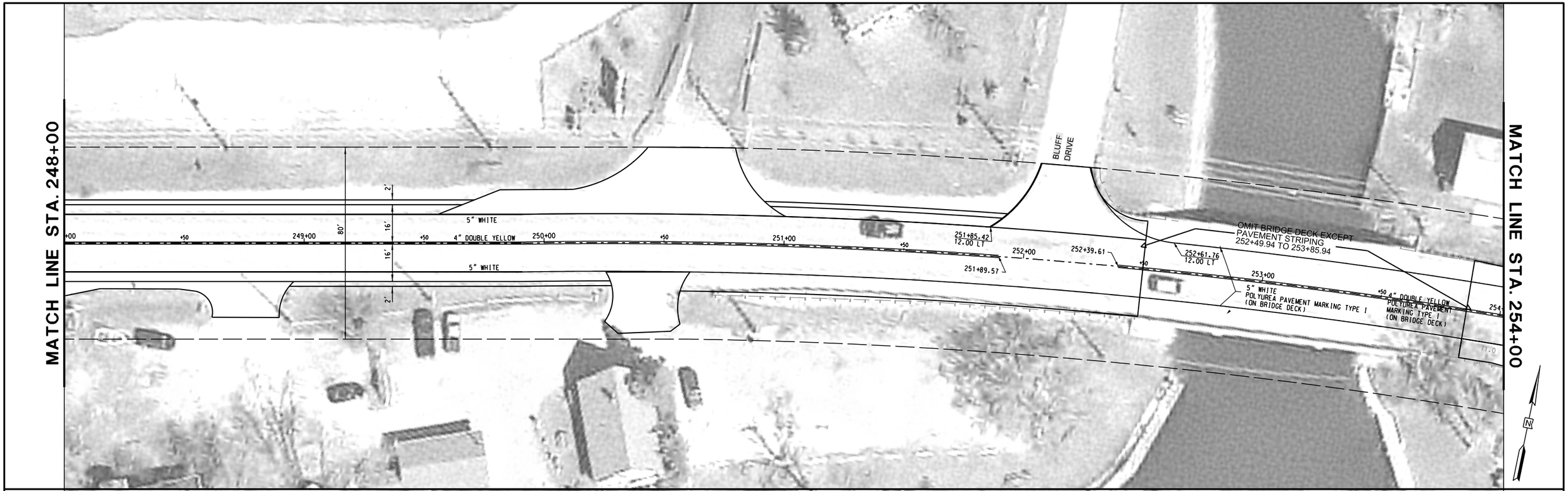

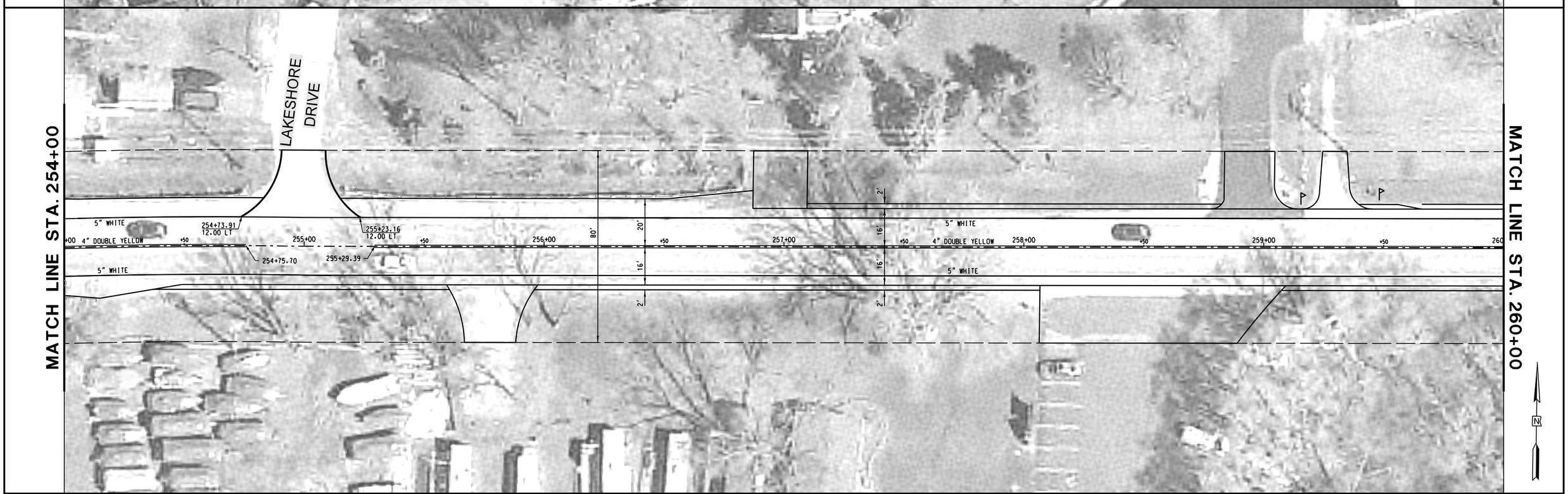

REVISIONS / REMARKS					
NO.	DESCRIPTION	DATE	BY	SURVEYOR:	/
		/ /		DSGNR/LIAISON:	
		/ /		PLOTTED BY:	hdmxb 5/28/2015

SCALES
VERT. 5 0
HORIZ. 0 20 40

GRASS LAKE ROAD RESURFACING

LakeCounty
Division of Transportation

PLAN SHEET
STA. 248+00.00 TO 260+00.00

ROUTE	SECTION	SECTION NUMBER	SHEET	SHEETS
CH18	59	14-00059-09-RS	47	85

FILE NAME: U:\Design\Burke\14-00059-09-RS Grass Lake Road Resurfacing\Grass Lake Rd Resurfacing (E of Bridge to IL Rt 59)\Grass Lake Working files\14-00059-09-RS master.dgn

REVISIONS / REMARKS					
NO.	DESCRIPTION	DATE	BY	SURVEYOR:	/
		/ /		DSGNR/LIAISON:	
		/ /		PLOTTED BY:	hdmxb 5/28/2015

SCALES
VERT 5 0
HORIZ. 0 20 40

GRASS LAKE ROAD RESURFACING

LakeCounty
Division of Transportation

PLAN SHEET

STA. 260+00.00 TO 272+00.00

ROUTE	SECTION	SECTION NUMBER	SHEET	SHEETS
CH18	59	14-00059-09-RS	48	85

FILE NAME: U:\Design\Burke\14-00059-09-RS Grass Lake Road Resurfacing\Grass Lake Rd Resurfacing (E of Bridge to IL Rt 59)\Grass Lake Working files\14-00059-09-RS master.dgn

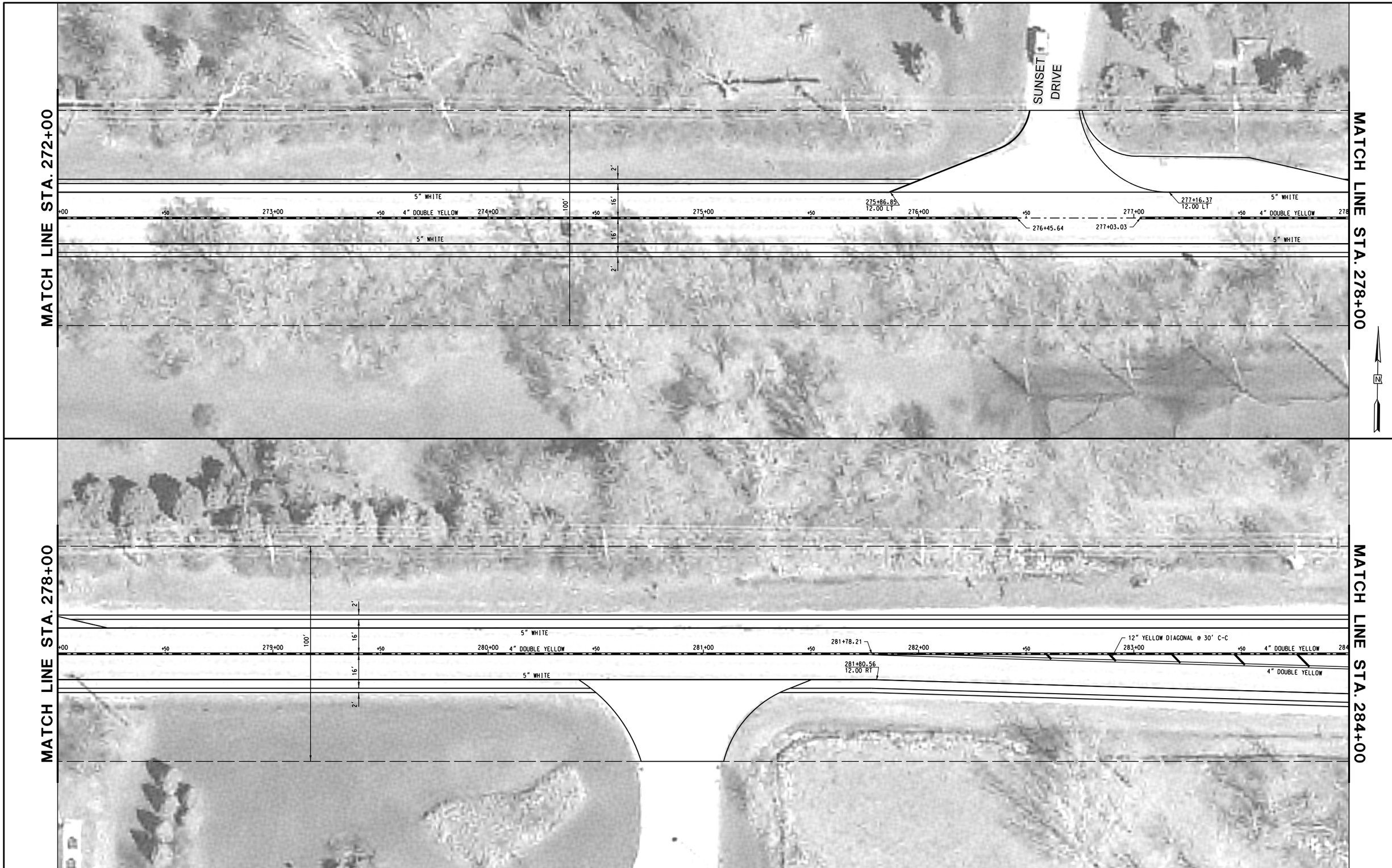

REVISIONS / REMARKS					
NO.	DESCRIPTION	DATE	BY	SURVEYOR:	/
		/ /		DSGNR/LIAISON:	
		/ /		PLOTTED BY:	hdmxb 5/28/2015

SCALES
VERT. 0 5
HORIZ. 0 20 40

GRASS LAKE ROAD RESURFACING

LakeCounty
Division of Transportation

PLAN SHEET

STA. 272+00.00 TO 284+00.00

ROUTE	SECTION	SECTION NUMBER	SHEET	SHEETS
CH18	59	14-00059-09-RS	49	85

FILE NAME: U:\Design\Burke\14-00059-09-RS Grass Lake Road Resurfacing\Grass Lake Rd Resurfacing (E of Bridge to IL Rt 59)\Grass Lake Working files\14-00059-09-RS master.dgn

REVISIONS / REMARKS					
NO.	DESCRIPTION	DATE	BY	SURVEYOR:	/
		/ /		DSGNR/LIAISON:	
		/ /		PLOTTED BY:	hdmxb 5/28/2015

SCALES
VERT. 0 5
HORIZ. 0 20 40

GRASS LAKE ROAD RESURFACING

LakeCounty
Division of Transportation

PLAN SHEET

STA. 284+00.00 TO 291+00.00

ROUTE	SECTION	SECTION NUMBER	SHEET	SHEETS
CH18	59	14-00059-09-RS	50	85

FILE NAME: U:\Design\Burke\14-00059-09-RS Grass Lake Road Resurfacing\Grass Lake Rd Resurfacing (E of Bridge to IL Rt 59)\Grass Lake Working files\14-00059-09-RS master.dgn

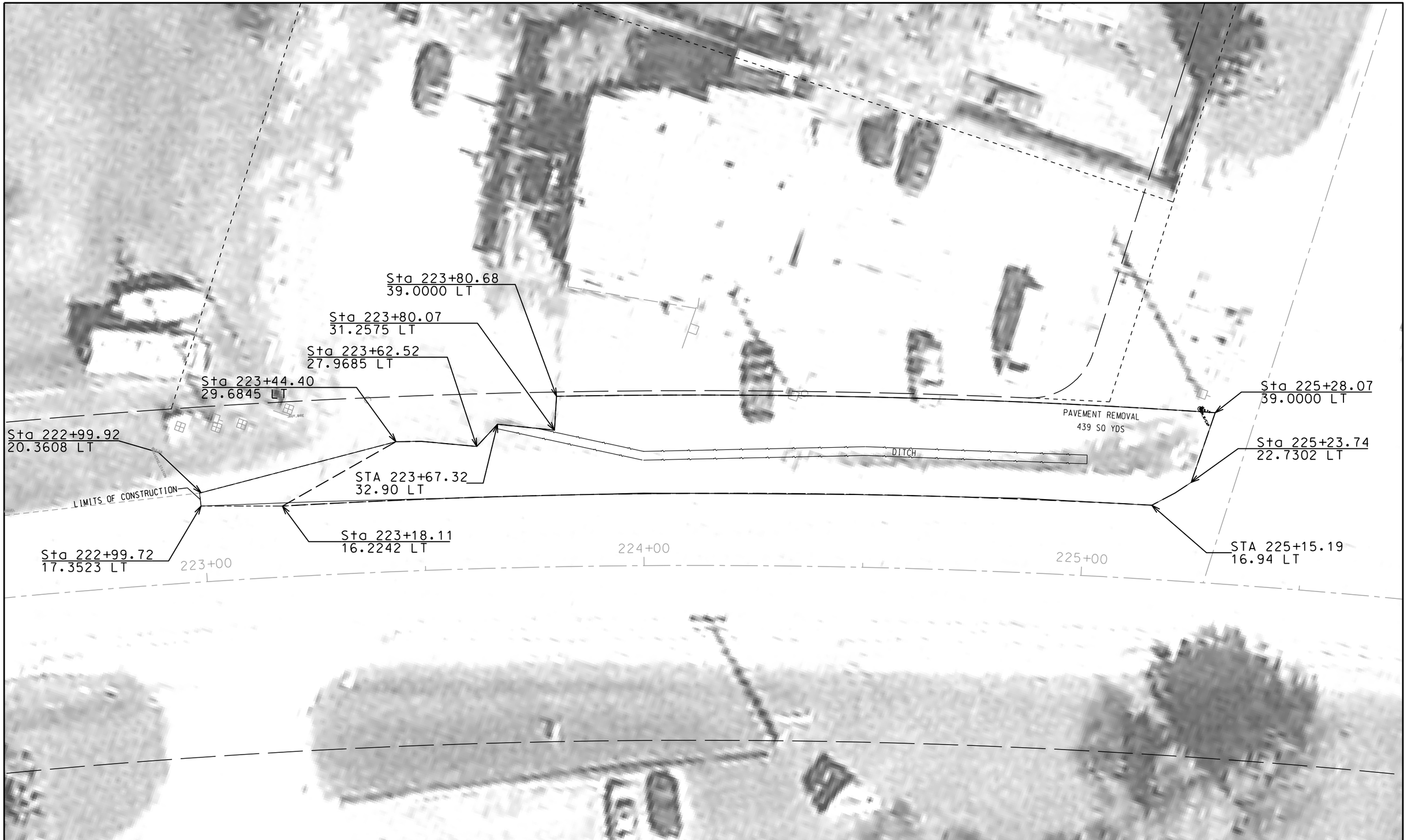

REVISIONS / REMARKS					
NO.	DESCRIPTION	DATE	BY	SURVEYOR:	___/___
		__/__/__	___	DSGNR/LIAISON:	___
		__/__/__	___	PLOTTED BY:	hdmxb 5/28/2015

GRASS LAKE ROAD RESURFACING

LakeCounty
Division of Transportation

DRAINAGE DITCHING PLAN

STA. 223+00 TO STA. 225+20

ROUTE	SECTION	SECTION NUMBER	SHEET	SHEETS
CH18	059	14-00059-09-RS	51	85

FILE NAME: U:\Design\Burke\14-00059-09-RS Grass Lake Road Resurfacing\Grass Lake Rd Resurfacing (E of Bridge to IL Rt 59)\Grass Lake Working files\14-00059-09-RS master.dgn

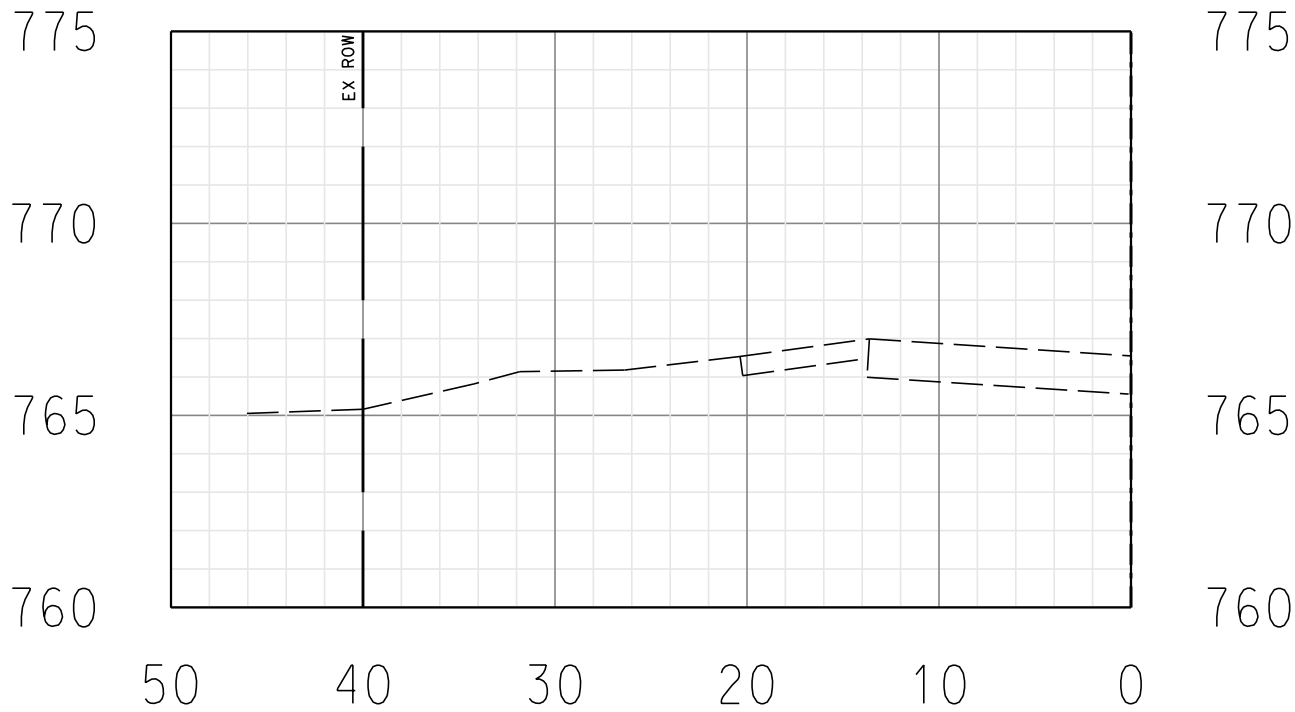

223+00

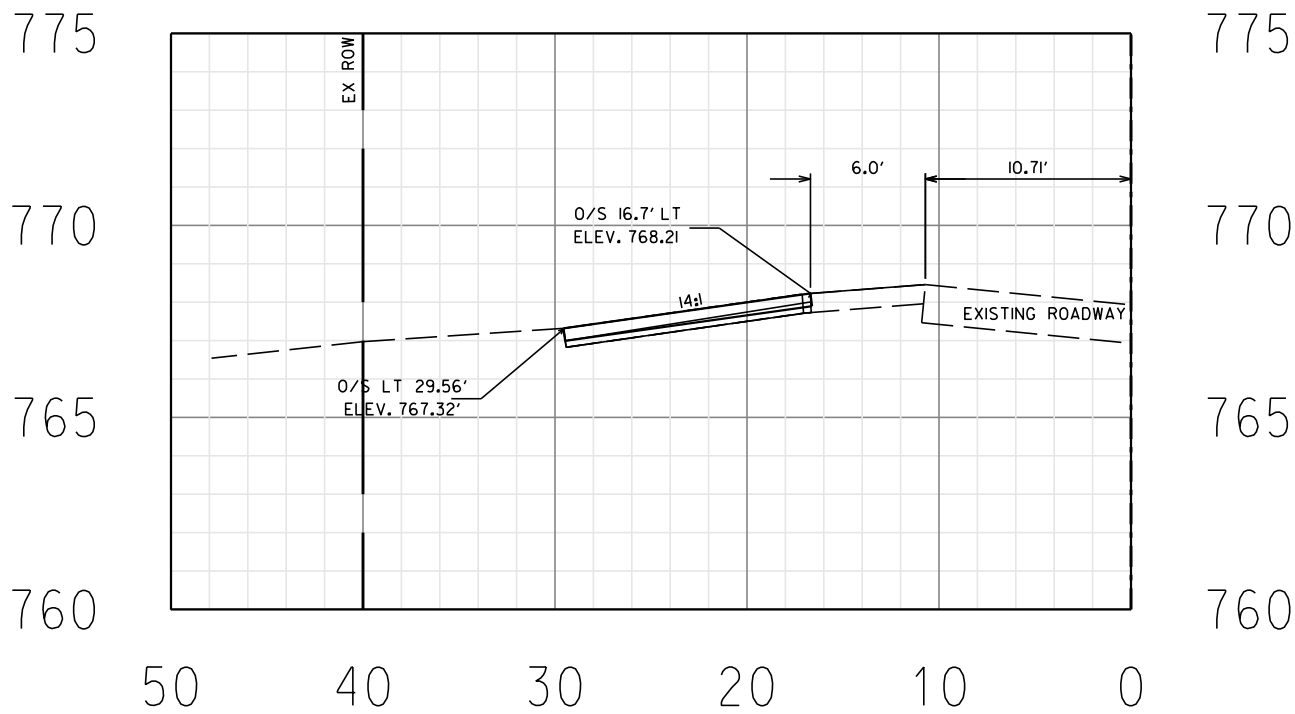

223+50

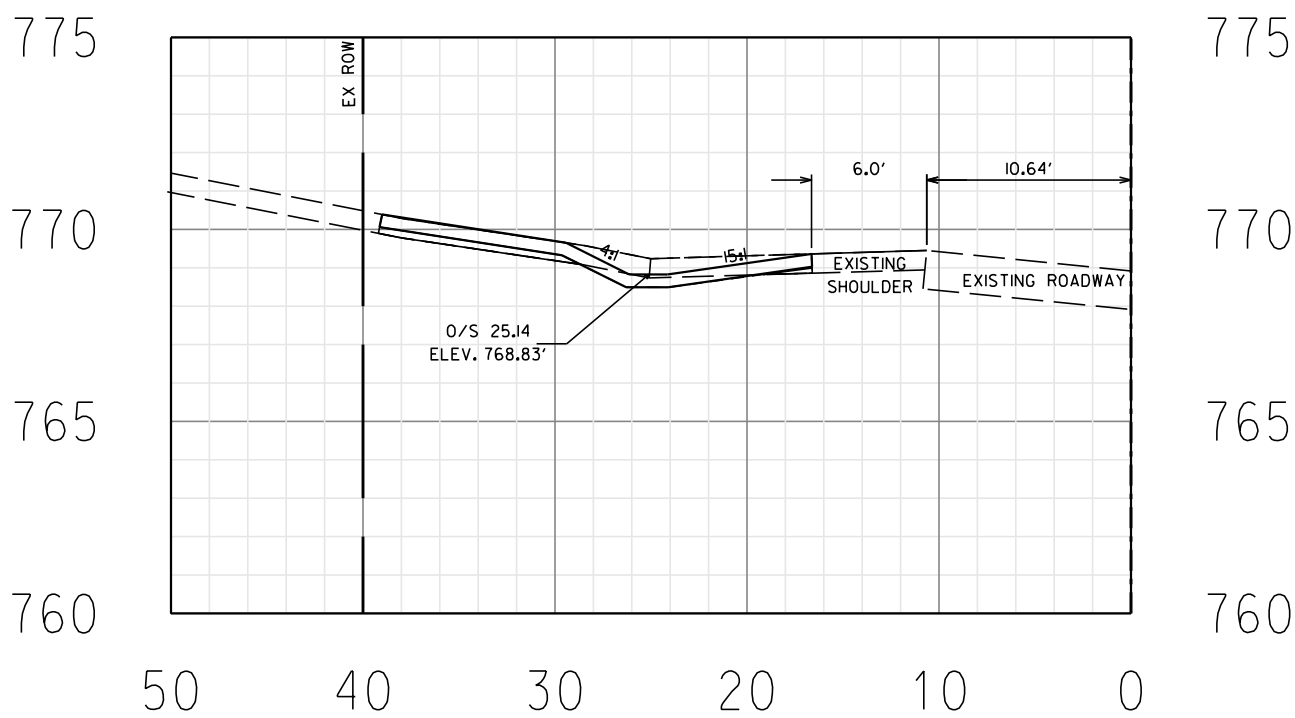

224+00

ROUTE	SECTION	SECTION NUMBER	SHEET	SHEETS
CH18	59	14-00059-09-RS	52	85

DRAINAGE DITCHING CROSS SECTIONS

CROSS SECTION STA. 223+00 TO STA. 224+00

LakeCounty
Division of Transportation

GRASS LAKE ROAD RESURFACING

REVISIONS / REMARKS

NO.	DESCRIPTION	DATE	BY
		__/__/__	
		__/__/__	
		__/__/__	

SURVEYOR: __/__
DSGNR/LIAISON:
PLOTTED BY: hdmxb 5/28/2015

FILE NAME: U:\Design\Burke\14-00059-09-RS Grass Lake Road Resurfacing\Grass Lake Rd Resurfacing (E of Bridge to IL Rt 59)\Grass Lake Working files\14-059-09\CrossSections Setup.dgn

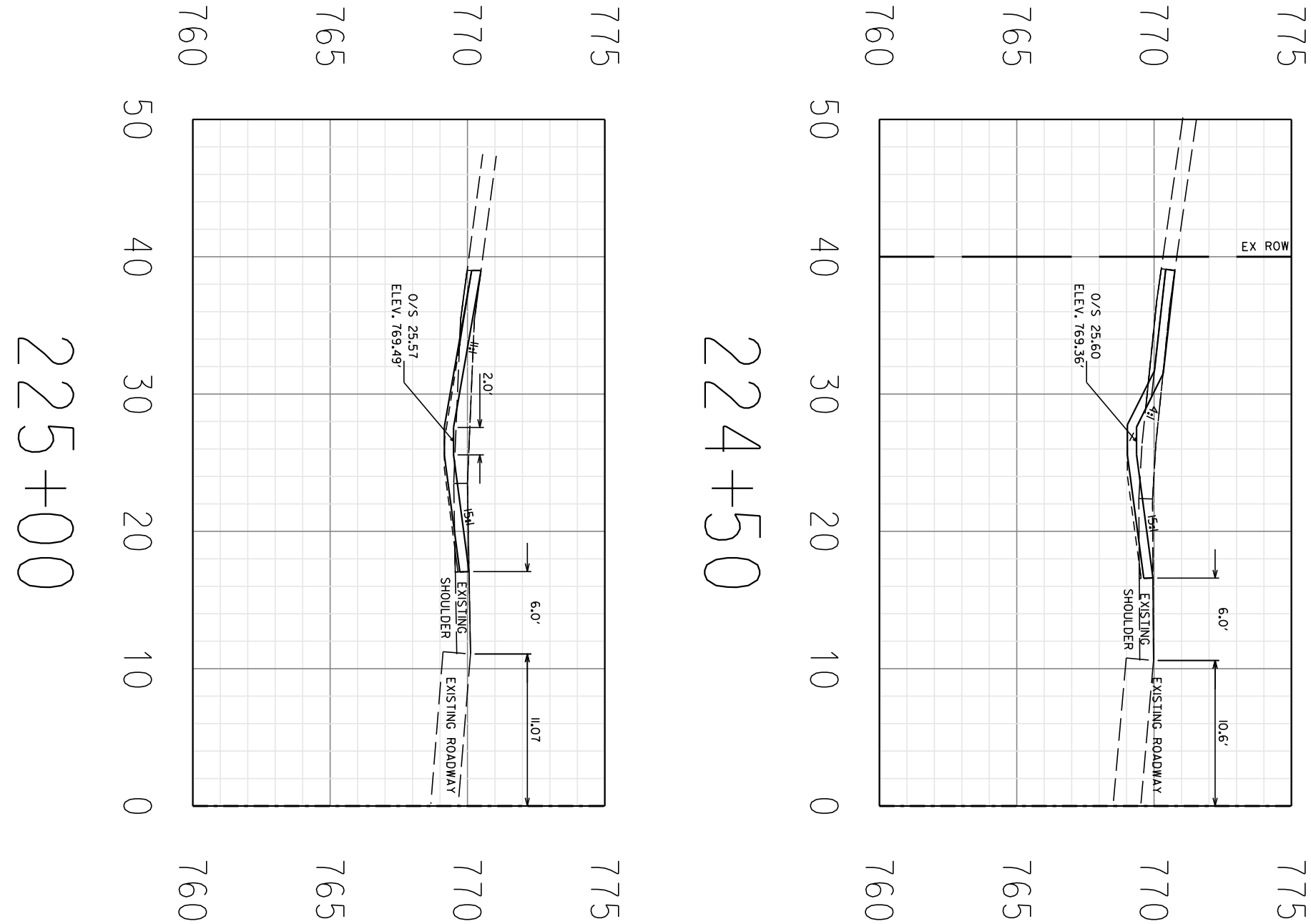

REVISIONS / REMARKS					
NO.	DESCRIPTION	DATE	BY	SURVEYOR:	__/__
		__/__/__		DSGNR/LIAISON:	
		__/__/__		PLOTTED BY:	hdmxb 5/28/2015

GRASS LAKE ROAD RESURFACING

LakeCounty
Division of Transportation

DRAINAGE DITCHING CROSS SECTIONS

CROSS SECTION STA. 224+50 TO STA. 225+00

ROUTE	SECTION	SECTION NUMBER	SHEET	SHEETS
CH18	59	14-00059-09-RS	53	85

FILE NAME: U:\Design\Burke\14-00059-09-RS Grass Lake Road Resurfacing\Grass Lake Rd Resurfacing (E of Bridge to IL Rt 59)\Grass Lake Working files\14-059-09\CrossSections Setup.dgn

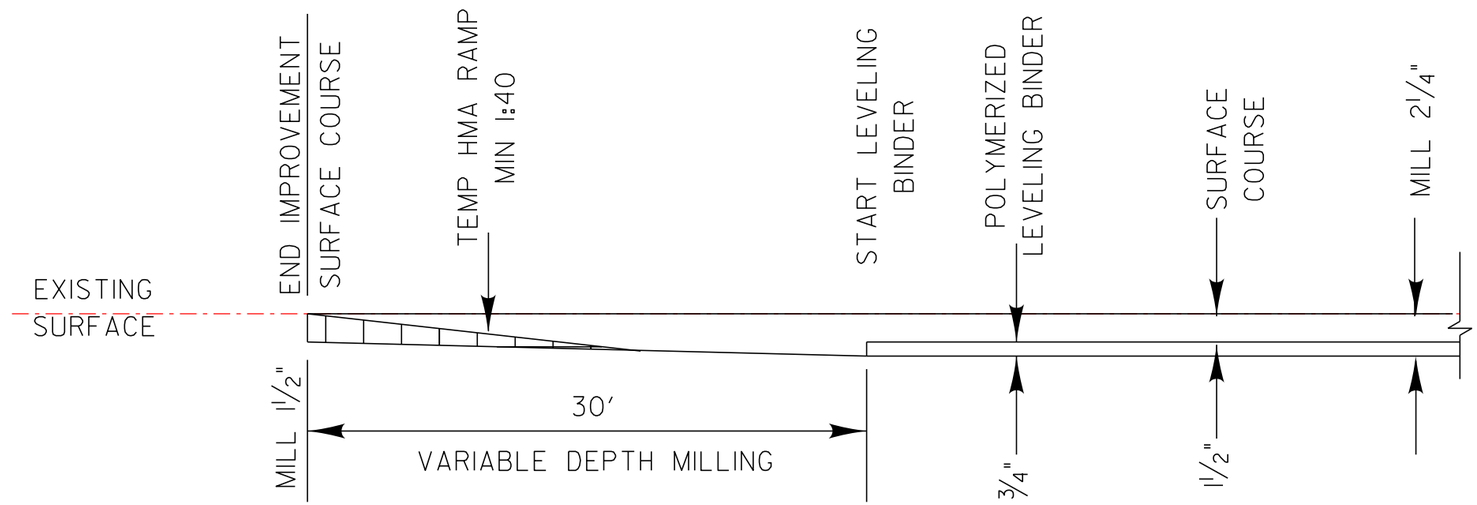

TYPICAL 30' BUTT JOINT DETAIL

REVISIONS / REMARKS					
NO.	DESCRIPTION	DATE	BY	SURVEYOR:	/
		/ /		DSGNR/LIAISON:	
		/ /		PLOTTED BY:	hdmxb 5/28/2015

2" VERT 0 — SCALES HORIZ. 0 2 4

GRASS LAKE ROAD RESURFACING

LakeCounty Division of Transportation

BUTT JOINT DETAILS

GRASS LAKE ROAD

ROUTE	SECTION	SECTION NUMBER	SHEET	SHEETS
CH18	59	14-00059-09-RS	54	85

FILE NAME: U:\Design\Burke\14-00059-09-RS Grass Lake Road Resurfacing\Grass Lake Rd Resurfacing (E of Bridge to IL Rt 59)\Grass Lake Working files\14-00059-09-RS master.dgn

EROSION CONTROL PLAN
& STORMWATER POLLUTION PREVENTION PLAN

THIS PROJECT DISTURBS 0.095 ACRES OF TOTAL LAND AREA.
COMPLIANCE WITH THE NATIONAL POLLUTION DISCHARGE ELIMINATION SYSTEM (NPDES)
STORMWATER PERMIT IS ONLY NECESSARY IF A PROJECT DISTURBS 1.0 OR MORE ACRES OF
TOTAL LAND AREA; AN NPDES STORMWATER PERMIT WILL NOT BE REQUIRED FOR THIS PROJECT.

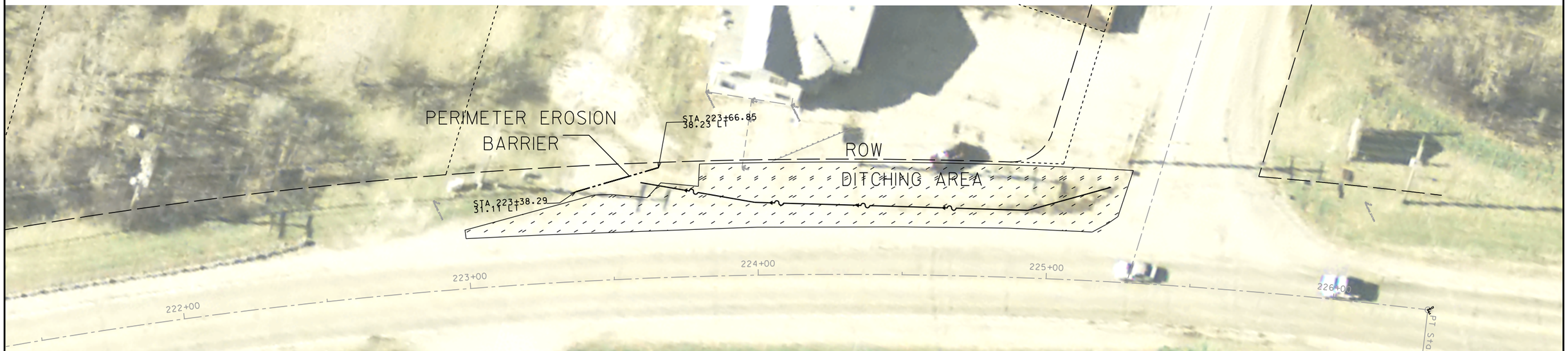

DRAINAGE BASINS OF LAKE COUNTY

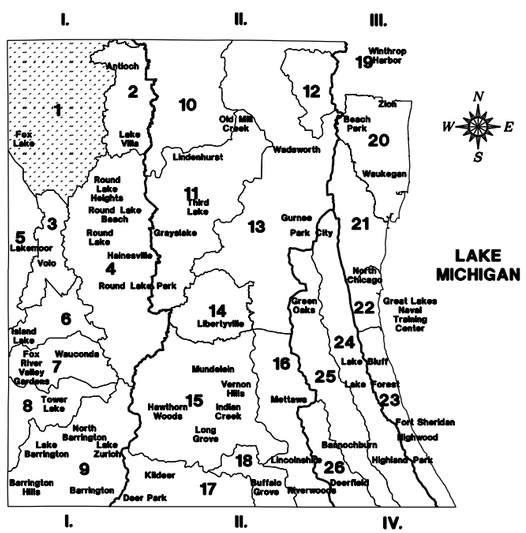

I. FOX RIVER WATERSHED
1. Upper Fox River
2. Sequoit Creek
3. Fish Lake Drain
4. Squaw Creek
5. Lower Fox River
6. Mutton Creek
7. Slocum Lake Drain
8. Tower Lake Drain
9. Flint Creek

II. DES PLAINES RIVER WATERSHED
10. North Mill Creek
11. Mill Creek
12. Newport Drainage Ditch
13. Upper Des Plaines River
14. Bull Creek
15. Indian Creek
16. Lower Des Plaines River
17. Buffalo Creek
18. Aptakisic Creek

III. LAKE MICHIGAN WATERSHED
19. Kellogg Creek
20. Dead River
21. Waukegan River
22. Pettibone Creek
23. Bluff/Ravine

IV. CHICAGO RIVER WATERSHED
24. Skokie River
25. Middle Fork
26. West Fork

GENERAL NOTES FOR SOIL EROSION CONTROL

1. PERIMETER EROSION BARRIER, EXCELSIOR ROLLED SHALL BE INSTALLED AT LOCATIONS SPECIFIED IN THE PLANS AT THE OUTSIDE THE TOE OF SLOPE OR INSIDE THE RIGHT-OF-WAY WHICHEVER IS CLOSER TO THE CENTERLINE, OR AS DIRECTED BY THE ENGINEER PRIOR TO THE START OF ANY EARTHWORK, CULVERT, OR STORM SEWER CONSTRUCTION.

2. THE PERIMETER EROSION BARRIER, EXCELSIOR ROLLED SHALL REMAIN IN PLACE UNTIL ALL DISTURBED AREAS HAVE BEEN STABILIZED WITH VEGETATION. AT THIS TIME, PERIMETER EROSION BARRIER, EXCELSIOR ROLLED SHALL BE REMOVED AND AREAS DAMAGED BY THE PERIMETER EROSION BARRIER, EXCELSIOR ROLLED REMOVAL SHALL BE RESTORED. THE RESTORATION OF THE AREA DISTURBED BY THE PERIMETER EROSION BARRIER, EXCELSIOR ROLLED REMOVAL SHALL BE INCLUDED IN THE PAY ITEM OF PERIMETER EROSION BARRIER, EXCELSIOR ROLLED.

3. THE INSTALLATION, MAINTENANCE & REMOVAL OF PERIMETER EROSION BARRIER, EXCELSIOR ROLLED SHALL BE PAID FOR UNDER THE ITEM OF PERIMETER EROSION BARRIER, EXCELSIOR ROLLED.

4. PERIMETER EROSION BARRIER, EXCELSIOR ROLLED SHALL BE CONSTRUCTED AS DIRECTED BY THE ENGINEER. THE PERIMETER EROSION BARRIER, EXCELSIOR ROLLED SHALL BE INSTALLED AS GRADING PROGRESSES THROUGH THE PROJECT.

5. ALL DISTURBED AREAS SHALL BE SEEDED/SODDED AS SOON AS PRACTICAL AFTER CONSTRUCTION IN THAT AREA HAS CONCLUDED.

LEGEND

PERIMETER EROSION BARRIER, EXCELSIOR ROLLED

SEEDING COMPLETE

ESTIMATED QUANTITIES

30 FEET - PERIMETER EROSION BARRIER, EXCELSIOR ROLLED

462 SQ YD - SEEDING COMPLETE

REVISIONS / REMARKS

NO.	DESCRIPTION	DATE	BY
		/ /	
		/ /	

SURVEYOR:	/
DSGNR/LIAISON:	
PLOTTED BY:	hdmxb 6/1/2015

LakeCounty
Division of Transportation

GRASS LAKE ROAD RESURFACING
EROSION CONTROL PLAN

ROUTE	SECTION	SECTION NUMBER	SHEET	SHEETS
CH18	059	14-00059-09-RS	55	85

FILE NAME: U:\Design\Burke\14-00059-09-RS Grass Lake Road Resurfacing\Grass Lake Rd Resurfacing (E of Bridge to IL Rt 59)\Grass Lake Working files\14-00059-09-RS master.dgn

TYPICAL APPLICATION OF TRAFFIC CONTROL DEVICES for HIGHWAY CONSTRUCTION, CONTRACT MAINTENANCE and UTILITY OPERATIONS

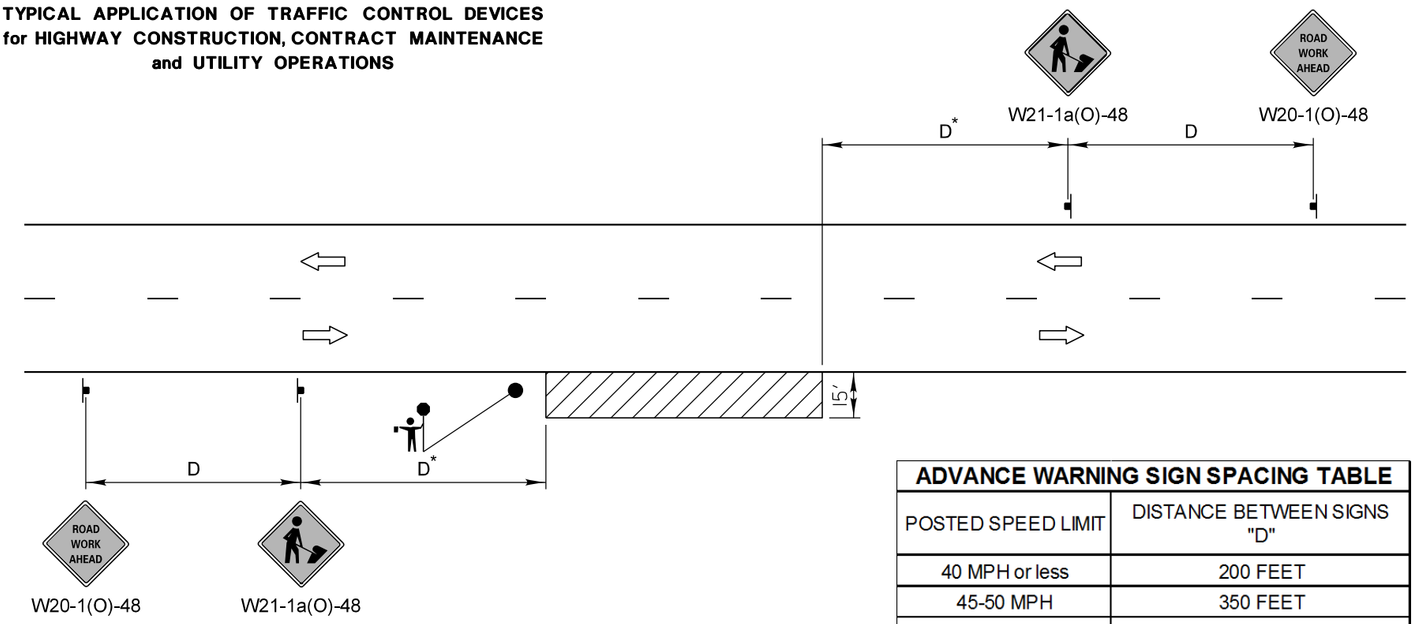

ADVANCE WARNING SIGN SPACING TABLE	
POSTED SPEED LIMIT	DISTANCE BETWEEN SIGNS "D"
40 MPH or less	200 FEET
45-50 MPH	350 FEET
55 MPH	500 FEET

GENERAL NOTES:

This special detail is used at any time, any vehicle, equipment, workers or their activities require a stationary, intermittent or continuous moving operation within 15 feet of the traffic lane, where the average speed is 1 mph or less.

* Minimum distance "D" is shown in the Advance Warning Sign Spacing Table. If the work is a moving operation, the maximum distance "D" may be extended to ½ the length required for one normal working day's operation or 4 miles, whichever is less.

If the work operation does not exceed 60 minutes, traffic control may be according to I.D.O.T. Highway Standard 701301.

SYMBOLS

- WORK AREA
- SIGN ON PORTABLE OR PERMANENT SUPPORT
- FLAGGER WITH TRAFFIC CONTROL SIGN WHEN REQUIRED

NOT TO SCALE

MODIFIED IDOT STANDARD 701011-02

REVISIONS	DATE
Title Block Revision	8/1/09
Reformat LCDOT Standard	7/15/10

LakeCounty Division of Transportation

APPROVED BY: A. KHAWAJA
DATE: APRIL 1, 2007

TWO LANE, TWO WAY, OFF-ROAD OPERATIONS DAY OPERATIONS ONLY

LC7000

TYPICAL APPLICATION OF TRAFFIC CONTROL DEVICES for HIGHWAY CONSTRUCTION, CONTRACT MAINTENANCE and UTILITY OPERATIONS

NOT TO SCALE

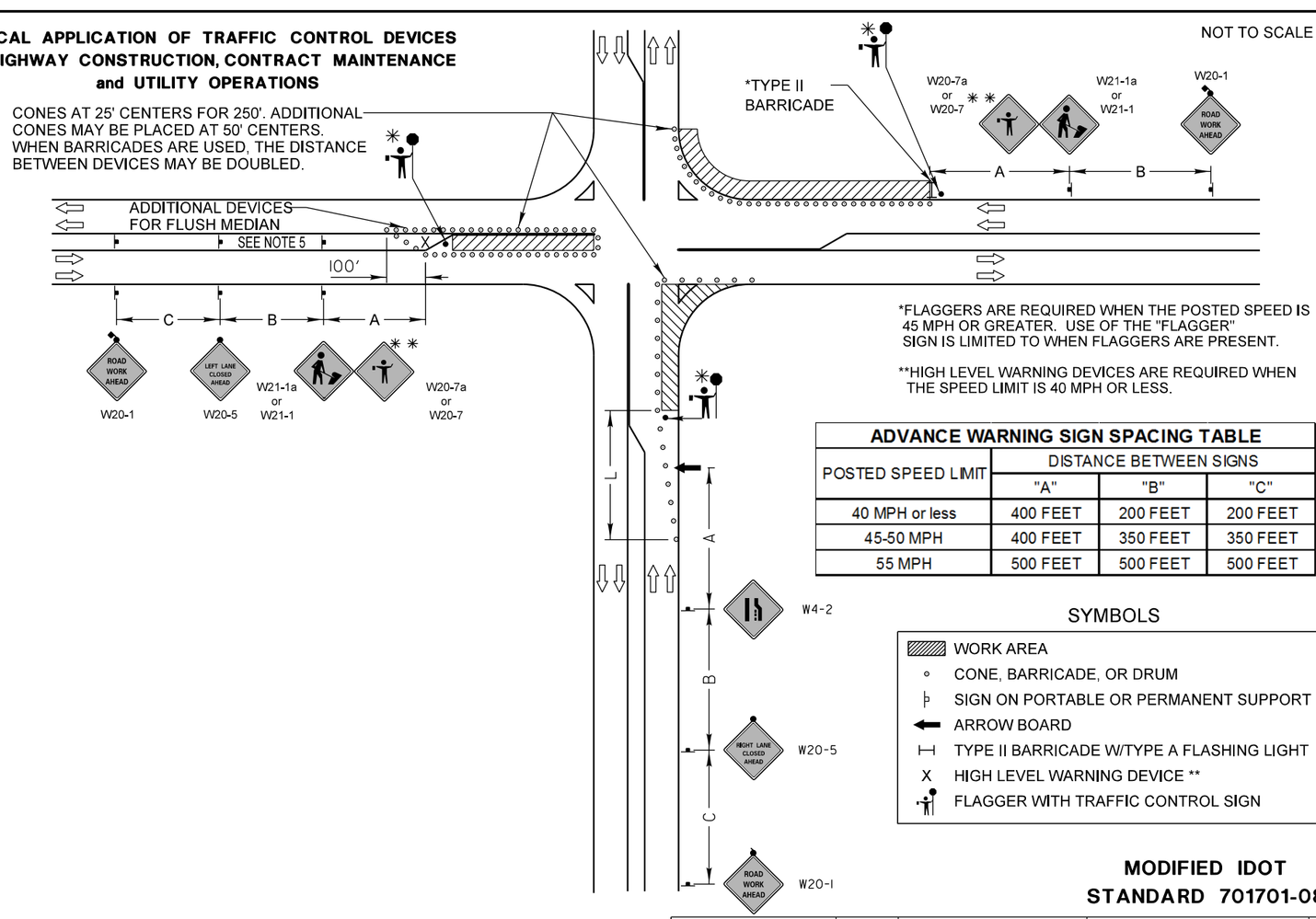

*FLAGGERS ARE REQUIRED WHEN THE POSTED SPEED IS 45 MPH OR GREATER. USE OF THE "FLAGGER" SIGN IS LIMITED TO WHEN FLAGGERS ARE PRESENT.

**HIGH LEVEL WARNING DEVICES ARE REQUIRED WHEN THE SPEED LIMIT IS 40 MPH OR LESS.

ADVANCE WARNING SIGN SPACING TABLE			
POSTED SPEED LIMIT	DISTANCE BETWEEN SIGNS		
	"A"	"B"	"C"
40 MPH or less	400 FEET	200 FEET	200 FEET
45-50 MPH	400 FEET	350 FEET	350 FEET
55 MPH	500 FEET	500 FEET	500 FEET

SYMBOLS

- WORK AREA
- CONE, BARRICADE, OR DRUM
- SIGN ON PORTABLE OR PERMANENT SUPPORT
- ARROW BOARD
- TYPE II BARRICADE W/TYPE A FLASHING LIGHT
- X HIGH LEVEL WARNING DEVICE **
- FLAGGER WITH TRAFFIC CONTROL SIGN

MODIFIED IDOT STANDARD 701701-08

REVISIONS	DATE
Revised IDOT Reference	2/1/08
Title Block Revision	8/1/09
Reformat LCDOT Standard	7/15/10
Removed "Worker" & "Flagger" signs	6/26/12

LakeCounty Division of Transportation

APPROVED BY: ANTHONY KHAWAJA
DATE: APRIL 1, 2007

URBAN LANE CLOSURE MULTILANE INTERSECTION

LC7003

NO.	REVISIONS / REMARKS DESCRIPTION	DATE	BY
		/ /	SURVEYOR: DSGNR/LIAISON: PLOTTED BY:
			hdmxb 5/29/2015

GRASS LAKE ROAD RESURFACING

LakeCounty Division of Transportation

LAKE COUNTY STANDARDS AND DETAILS

GRASS LAKE ROAD

ROUTE	SECTION	SECTION NUMBER	SHEET	SHEETS
CH18	59	14-00059-09-RS	56	85

FILE NAME: U:\Design\Burke\14-00059-09-RS Grass Lake Road Resurfacing\Grass Lake Rd Resurfacing IE of Bridge to IL Rt 59\Grass Lake Working files\14-00059-09-RS master.dgn

TYPICAL APPLICATION OF TRAFFIC CONTROL DEVICES for HIGHWAY CONSTRUCTION, CONTRACT MAINTENANCE and UTILITY OPERATIONS

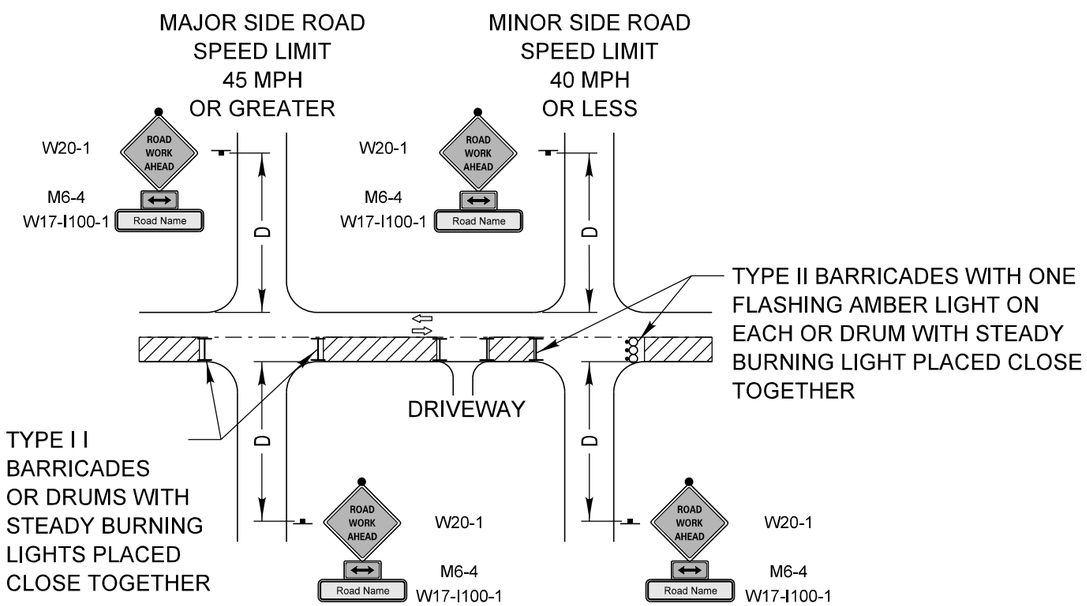

SYMBOLS

- WORK AREA
- SIGN ON PORTABLE OR PERMANENT SUPPORT
- TYPE II BARRICADE W/TYPE A FLASHING LIGHT
- DRUM WITH STEADY BURNING LIGHT

ADVANCE WARNING SIGN SPACING TABLE

POSTED SPEED LIMIT	DISTANCE BETWEEN SIGNS "D"
40 MPH or less	200 FEET
45-50 MPH	350 FEET
55 MPH	500 FEET

NOT TO SCALE

GENERAL NOTE:

This Standard is used where at any time, day or night, any vehicle, equipment, workers or their activities encroach on the pavement or where construction requires lane closures.

DESIGN NOTES:

1. For a side road with a speed limit of 40 mph or less, the closed portion of the main route shall be protected by blocking with Type II barricades or drums, 1/3 of the cross section of the closed portion of the roadway.
2. For a side road with a speed limit of 45 mph or greater, the closed portion of the main route shall be protected by blocking with Type II barricades or drums, 1/2 of the cross section of the closed portion of the roadway.
3. All W20-1 "ROAD WORK AHEAD" signs shall be 48"x48" with fluorescent orange reflective sheeting with an amber Type A flashing light mounted on the sign.
4. When the side road lies between the beginning of the mainline signing and the work zone, a M6-1 Single Headed Arrow shall be used in lieu of the M6-4 Double Headed Arrow.
5. For a lane closure on a side road, use the applicable portions of the appropriate Highway Standard or Traffic Control Detail. The spacing of the signs and barricades or drums shall be adjusted for field conditions as directed by the engineer. The directional arrow shall be covered or removed when no longer consistent with the side road closure.
6. Advance warning signs shall be omitted on driveways unless otherwise noted.
7. The traffic control and protection for side roads and intersections shall be included in the contract lump sum price for "TRAFFIC CONTROL AND PROTECTION, SPECIAL."

MODIFIED IDOT DISTRICT ONE SIDE ROAD DETAIL

REVISIONS	DATE
Title Block Revision	8/1/09
Reformat LCDOT Standard	7/15/10
Use of Drums in lieu Type III Barricade	4/22/14

LakeCounty Division of Transportation

APPROVED BY: ANTHONY KHAWAJA
DATE: APRIL 1, 2007

TRAFFIC CONTROL and PROTECTION for SIDEROADS, INTERSECTIONS and DRIVEWAYS

LC7004

REVISIONS / REMARKS					
NO.	DESCRIPTION	DATE	BY	SURVEYOR:	/
		/ /		DSGNR/LIAISON:	
		/ /		PLOTTED BY:	hdmxb 5/29/2015

GRASS LAKE ROAD RESURFACING

LakeCounty Division of Transportation

LAKE COUNTY STANDARDS AND DETAILS

GRASS LAKE ROAD

ROUTE	SECTION	SECTION NUMBER	SHEET	SHEETS
CH18	59	14-00059-09-RS	57	85

FILE NAME: U:\Design\Burke\14-00059-09-RS Grass Lake Road Resurfacing\Grass Lake Rd Resurfacing (E of Bridge to IL Rt 59)\Grass Lake Working files\14-00059-09-RS master.dgn

TYPICAL APPLICATION OF TRAFFIC CONTROL DEVICES for HIGHWAY CONSTRUCTION, CONTRACT MAINTENANCE and UTILITY OPERATIONS

NOT TO SCALE

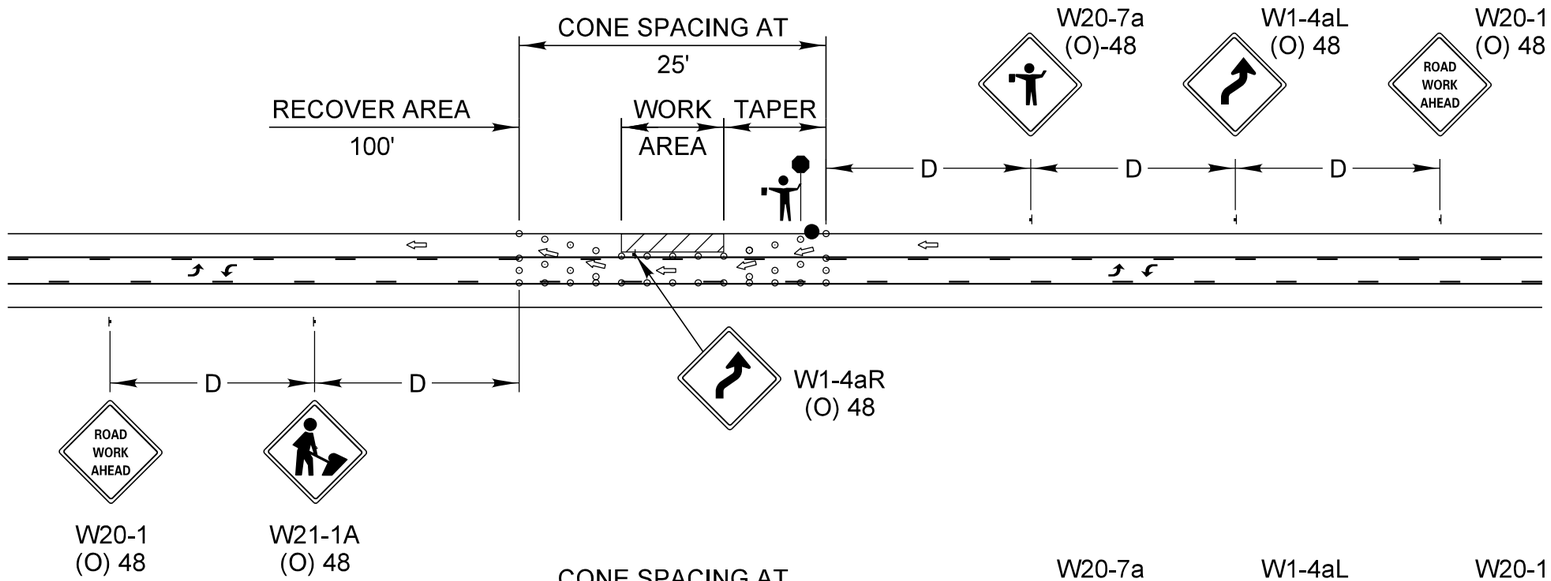

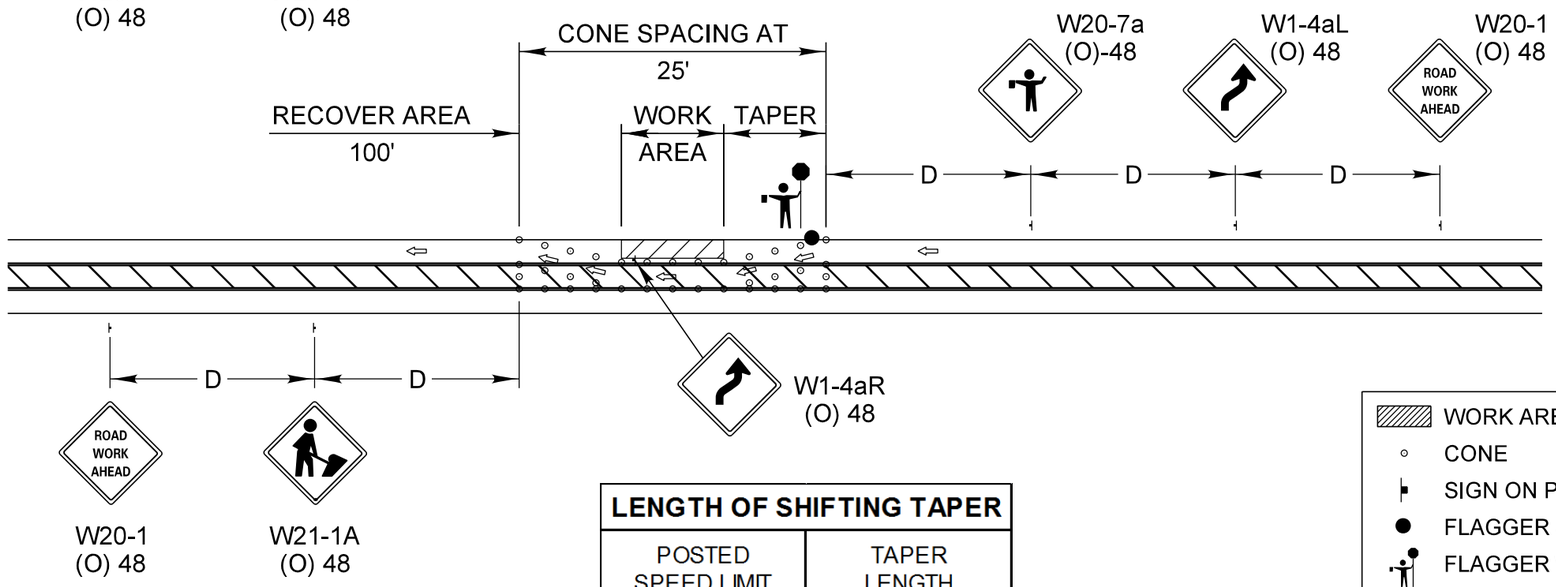

GENERAL NOTE:

This Standard is used where during the day only, any vehicle, equipment, workers or their activities encroach on a 3 lane, two way pavement requiring the closure of one traffic lane.

SYMBOLS

- WORK AREA
- CONE
- SIGN ON PORTABLE OR PERMANENT SUPPORT
- FLAGGER STATION
- FLAGGER WITH SLOW PADDLE

ADVANCE WARNING SIGN SPACING TABLE

POSTED SPEED LIMIT	DISTANCE BETWEEN SIGNS "D"
40 MPH or less	200 FEET
45-50 MPH	350 FEET
55 MPH	500 FEET

LENGTH OF SHIFTING TAPER

POSTED SPEED LIMIT	TAPER LENGTH
30 MPH	100'
35 MPH	125'
40 MPH	150'
45 MPH	275'
50 MPH	300'
55 MPH	325'

REVISIONS	DATE
Title Block Revision	8/1/09
Reformat LCDOT Standard	7/15/10

LakeCounty
Division of Transportation

APPROVED BY: A. KHAWAJA
DATE: APRIL 1, 2007

TYPICAL LANE CLOSURE 3 LANE ROAD SECTION

LC7005

REVISIONS / REMARKS					
NO.	DESCRIPTION	DATE	BY	SURVEYOR:	/
		/ /		DSGNR/LIAISON:	
		/ /		PLOTTED BY:	hdmxb 5/29/2015

GRASS LAKE ROAD RESURFACING

LakeCounty
Division of Transportation

LAKE COUNTY STANDARDS AND DETAILS
GRASS LAKE ROAD

ROUTE	SECTION	SECTION NUMBER	SHEET	SHEETS
CH18	59	14-00059-09-RS	58	85

FILE NAME: U:\Design\Burke\14-00059-09-RS Grass Lake Road Resurfacing\Grass Lake Rd Resurfacing (E of Bridge to IL Rt 59)\Grass Lake Working files\14-00059-09-RS master.dgn

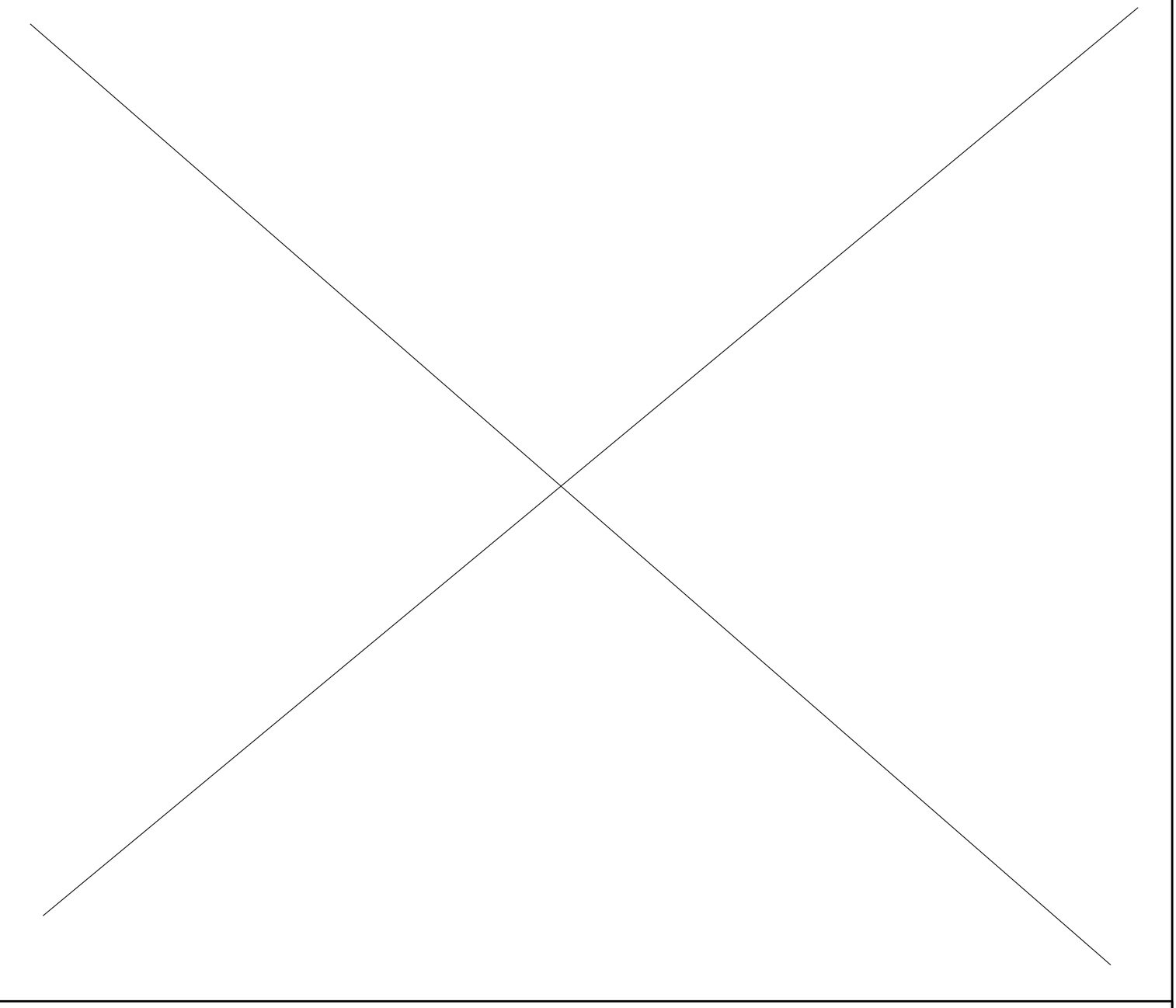

GENERAL NOTES

1) Direction Indicator Barricades shall be constructed from non-metallic Type II barricades meeting the requirements of Article 1106.02 of the Standard Specifications, except where modified by this detail.
2) The Direction Indicator Barricades shall be equipped with Type C steady burning lights if used to channelize traffic during the hours of darkness.
3) The reflective sheeting for the top panel shall be Type AZ fluorescent orange. The diagonal panels shall have orange and white Type A or better reflective sheeting.

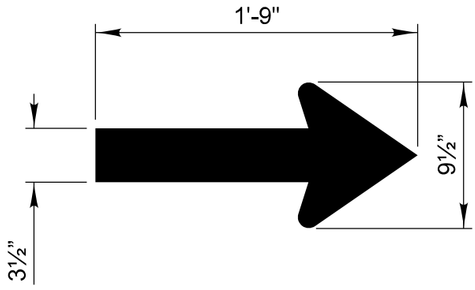

REVISIONS	DATE
Text Update	7/15/11

LakeCounty Division of Transportation

APPROVED BY: ANTHONY KHAWAJA
DATE: APRIL 1, 2007

TYPICAL APPLICATION OF TRAFFIC CONTROL DEVICES
HIGHWAY CONSTRUCTION, CONTRACT MAINTENANCE

DIRECTION INDICATOR BARRICADES

LC7200

NO.	REVISIONS / REMARKS DESCRIPTION	DATE	BY
		/ /	SURVEYOR: DSGNR/LIAISON: PLOTTED BY: hdmxb 5/29/2015

GRASS LAKE ROAD RESURFACING

LakeCounty Division of Transportation

LAKE COUNTY STANDARDS AND DETAILS

GRASS LAKE ROAD

ROUTE	SECTION	SECTION NUMBER	SHEET	SHEETS
CH18	59	14-00059-09-RS	59	85

FILE NAME: U:\Design\Burke\14-00059-09-RS Grass Lake Road Resurfacing\Grass Lake Rd Resurfacing IE of Bridge to IL Rt 59\Grass Lake Working files\14-00059-09-RS master.dgn

TYPICAL PAVEMENT MARKINGS

TYPICAL MINI-SKIP PAVEMENT MARKINGS

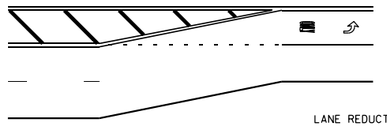

LANE REDUCTION

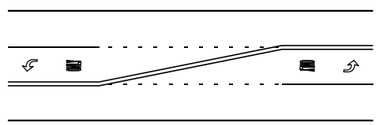

DOUBLE TAPER

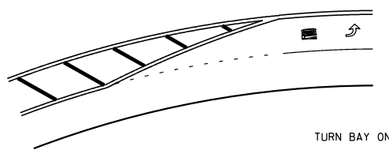

TURN BAY ON CURVE

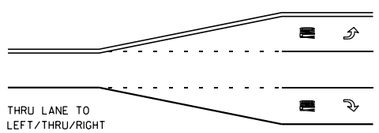

MINI-SKIPS ARE 2 FEET WHITE LINE WITH 6 FEET SPACING. THE MINI-SKIP IS THE SAME WIDTH AS THE PAVEMENT MARKING LINE, IT EXTENDS.

EDGE LINE RADII AT SIDE STREETS

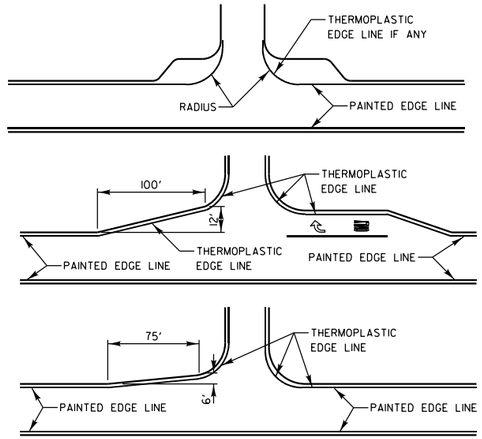

LANE REDUCTION ARROW PLACEMENT

REFERENCE:
1. MANUAL ON UNIFORM TRAFFIC CONTROL DEVICES, 2009 EDITION (USDOT-FHWA), TABLE 2C-4, CONDITION "A".

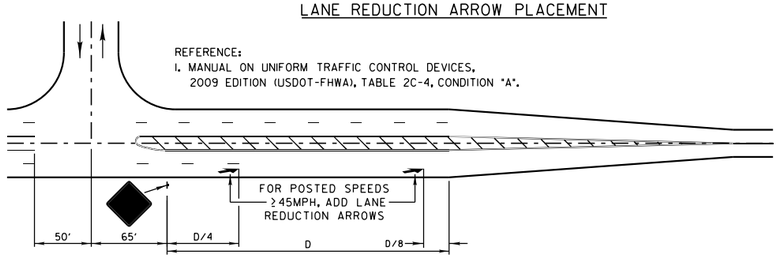

DESIGN SPEED MPH	D (FEET)
<45	N/A
45	775' (1)
50	885' (1)
55	990' (1)

TYPCIAL TURN BAY PAVEMENT MARKINGS

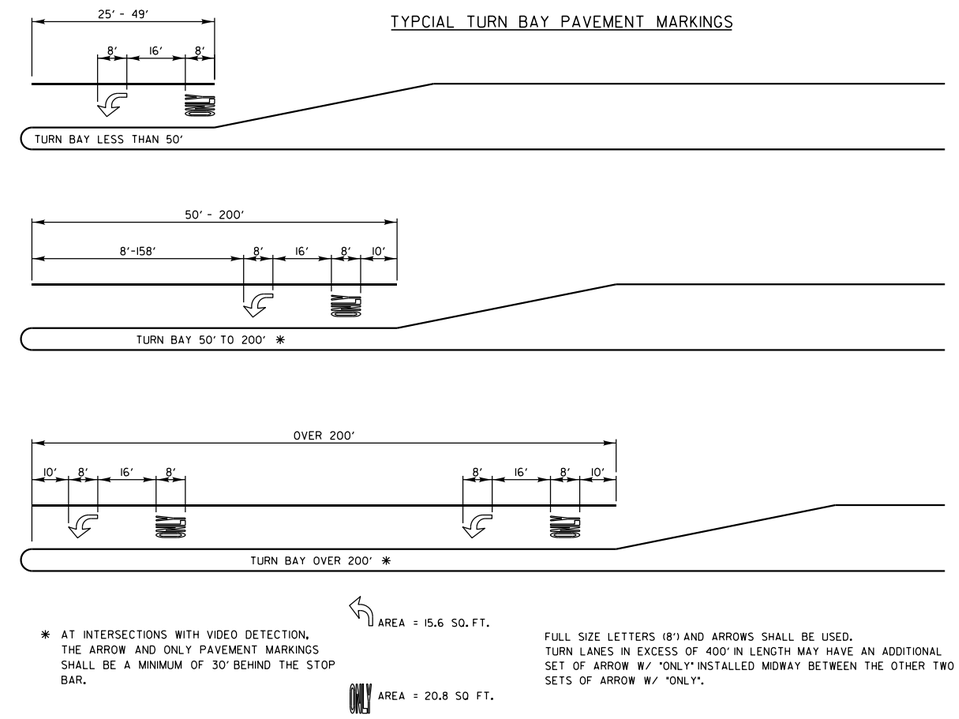

✱ AT INTERSECTIONS WITH VIDEO DETECTION, THE ARROW AND ONLY PAVEMENT MARKINGS SHALL BE A MINIMUM OF 30' BEHIND THE STOP BAR.

AREA = 15.6 SQ. FT.

ONLY AREA = 20.8 SQ FT.

FULL SIZE LETTERS (8') AND ARROWS SHALL BE USED. TURN LANES IN EXCESS OF 400' IN LENGTH MAY HAVE AN ADDITIONAL SET OF ARROW W/ "ONLY" INSTALLED MIDWAY BETWEEN THE OTHER TWO SETS OF ARROW W/ "ONLY".

TWO LANE ROAD

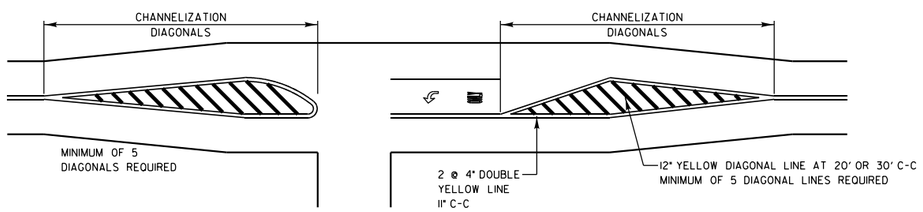

TYPICAL DIAGONAL SPACING

DIAGONAL SPACING

SPEED LIMIT RANGE	CONTINUOUS	INTERSECTION CHANNELIZATION
30-45 MPH	75 FT.	20 FT.
OVER 45 MPH	150 FT.	30 FT.

3 OR 5 LANE ROAD

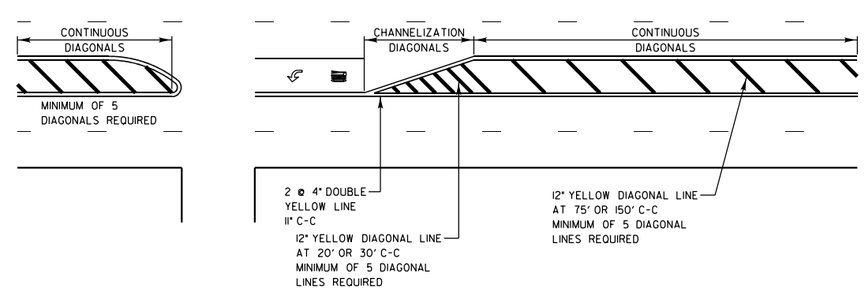

TWO-WAY LEFT TO LEFT TURN BAY

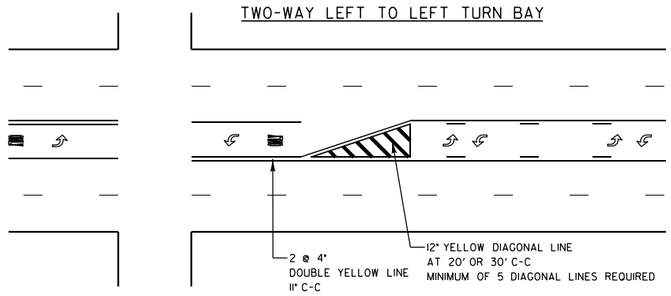

DUAL LEFT TURN ARROWS

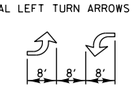

31.2 SQ. FT. MINIMUM OF 2 SETS REQUIRED

A MINIMUM OF TWO PAIRS OF DUAL LEFT TURN ARROWS SHALL BE USED. THE DUAL LEFT TURN ARROWS SHALL BE WHITE IN COLOR. THE INTERVAL BETWEEN SETS OF DUAL LEFT TURN ARROWS SHOULD BE 200' AND 300'.

REVISIONS	DATE
SEPARATED RAILROAD SHEET	06/02/08
ADDED LANE REDUCTION ARROWS	07/1/12
RAISED TO RECESSED MARKERS	12/2/13
REMOVE STATION NUMBERS	5/30/14

LakeCounty Division of Transportation

APPROVED BY: A. KHAWAJA
DATE: APRIL 1, 2007

TYPICAL PAVEMENT MARKINGS FOR COUNTY HIGHWAYS

SHEET 1 OF 2

LC7800

REVISIONS / REMARKS					
NO.	DESCRIPTION	DATE	BY	SURVEYOR:	/
		/ /		DSGNR/LIAISON:	
		/ /		PLOTTED BY:	hdmxb 5/29/2015

GRASS LAKE ROAD RESURFACING

LakeCounty Division of Transportation

GRASS LAKE ROAD
LAKE COUNTY STANDARDS & DETAILS

ROUTE	SECTION	SECTION NUMBER	SHEET	SHEETS
CH18	059	14-00059-09-RS	60	85

FILE NAME: U:\Design\Burke\14-00059-09-RS Grass Lake Road Resurfacing\Grass Lake Rd Resurfacing (E of Bridge to IL Rt 59)\Grass Lake Working files\14-00059-09-RS master.dgn

TYPICAL PAVEMENT MARKINGS AND RECESSED PAVEMENT MARKERS

THRU LANE TO TURN LANE CONVERSION

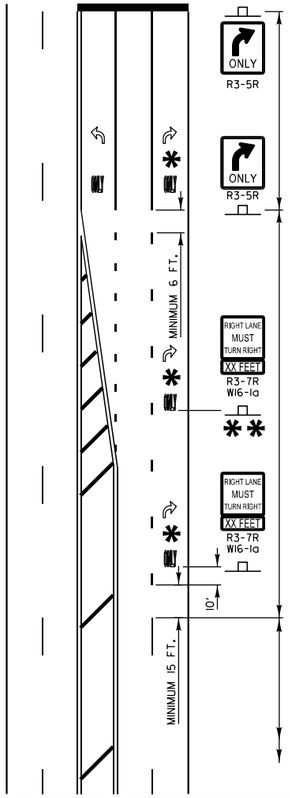

TURN LANE
6" WHITE LINE
(ADDITIONAL PAVEMENT MARKINGS AS SHOWN ON SHEET ONE OF THE L.C.D.O.T TYPICAL PAVEMENT MARKINGS DETAIL SHEETS)

TRANSITION ZONE
6" WHITE 3'/12' SKIP DASH
LANE LINE

THRU LANE
4 " WHITE 10'/30' SKIP DASH
LANE LINE

MINIMUM TRANSITION ZONE LENGTH

POSTED SPEED	LENGTH
25 M.P.H.	255 FT
30 M.P.H.	330 FT
35 M.P.H.	405 FT
40 M.P.H.	480 FT
45 M.P.H.	555 FT
50 M.P.H.	630 FT
55 M.P.H.	705 FT

* LOCATION OF PAV'T MARKINGS

(MEASURED FROM BEGINNING OF TRANSITION ZONE)

POSTED SPEED	LOCATION OF PAV'T MARKINGS
25 M.P.H.	10 FT, 260 FT
30 M.P.H.	10 FT, 170 FT, 340 FT
35 M.P.H.	10 FT, 210 FT, 410 FT
40 M.P.H.	10 FT, 170FT, 330 FT, 490 FT
45 M.P.H.	10 FT, 190 FT, 370 FT, 560 FT
50 M.P.H.	10 FT, 170 FT, 330 FT, 490 FT, 640 FT
55 M.P.H.	10 FT, 180 FT, 350 FT, 520 FT, 710 FT

** FOR POSTED SPEEDS 40 M.P.H. OR GREATER A SECOND R3-7/W16-1a SIGN INSTALLATION SHALL BE LOCATED HALFWAY BETWEEN THE BEGINNING OF THE TRANSITION ZONE AND THE BEGINNING OF THE TURN LANE

PAVEMENT MARKING GUIDELINES				
TYPE OF MARKING	WIDTH OF LINE	PATTERN	COLOR	SPACING / REMARKS
CENTERLINE OF 2 LANE PAVEMENT	4 IN.	SKIP-DASH	YELLOW	10 FT. LINE WITH 30 FT. SPACE
NO PASSING ZONE LINES: FOR ONE DIRECTION FOR BOTH DIRECTIONS	4 IN. 2 @ 4 IN.	SOLID SOLID	YELLOW YELLOW	5 1/2 IN. C-C FROM SKIP-DASH CENTERLINE 11IN. C-C (OMIT SKIP-DASH CENTERLINE BETWEEN)
CENTERLINE ON MULTI-LANE UNDIVIDED	2 @ 4 IN.	SOLID	YELLOW	11 IN. C-C
LANE LINES	4 IN.	SKIP-DASH	WHITE	10 FT. LINE WITH 30 FT. SPACE
DOTTED LINES (EXTENSIONS OF CENTER, LANE OR TURN LANE MARKINGS)	SAME AS LINE BEING EXTENDED	SKIP-DASH	SAME AS LINE BEING EXTENDED	2 FT. LINE WITH 6 FT. SPACE
EDGE LINES	5 IN. WHITE 4 IN. YELLOW	SOLID	WHITE - RIGHT YELLOW - LEFT	OUTLINE RAISED MEDIANS IN YELLOW
TURN LANE MARKINGS	6 IN. LINE FULL SIZE LETTERS AND SYMBOLS (8 FT.)	SOLID	WHITE	TURN ARROW 15.6 SQ. FT. STRAIGHT ARROW 11.5 SQ. FT. ONLY 20.8 SQ. FT. COMB. ARROW 26.0 SQ. FT.
TWO WAY LEFT TURN MARKING	2 @ 4 IN. EACH DIRECTION 8 FT. LEFT ARROW	SKIP-DASH AND SOLID IN PAIRS	YELLOW WHITE	10 FT. LINE WITH 30 FT. SPACE FOR SKIP-DASH 5 1/2 IN. C-C BETWEEN SKIP-DASH LINE AND SOLID LINE SEE TYPICAL TWO-WAY LEFT TURN MARKING DETAIL
CROSSWALK	12 IN. @ 90°	SOLID	WHITE	12 IN. LONGITUDINAL BAR WITH 24 IN. SPACE 6 FT. TO 12 FT. WIDE SEE TYPICAL CROSSWALK MARKING DETAIL
STOP BARS	24 IN.	SOLID	WHITE	PLACE 4 FT. IN ADVANCE OF AND PARALLEL TO CROSSWALK, IF PRESENT, OTHERWISE PLACE AT DESIRED STOPPING POINT.
PAINTED MEDIANS	2 @ 4 IN. & 11 IN. C-C 12 IN. DIAGONALS @ 45° NO DIAGONALS USED FOR 4 FT. WIDE MEDIAN	SOLID	YELLOW: 2-WAY TRAFFIC WHITE: 1-WAY TRAFFIC	11 IN. C-C FOR THE DOUBLE LINE SEE TYPICAL PAINTED MEDIAN MARKING DETAIL MINIMUM OF 5 DIAGONALS
GORE MARKING AND CHANNELIZING LINES	8 IN. WITH 12 IN. DIAGONALS @ 45°	SOLID	WHITE	DIAGONALS 15 FT. C-C (LESS THAN 30 M.P.H.) 20 FT. C-C (30 TO 45 M.P.H.) 30 FT. C-C (OVER 45 M.P.H.) MINIMUM OF 5 DIAGONALS
R.R. CROSSING	24 IN. TRANSVERSE LINES RR IS 6 FT. LETTER 16 IN. LINE FOR "X"	SOLID	WHITE	SEE I.D.O.T. STD. 780001 SQ. FT. AREA OF: "R" = 3.6 SQ. FT. / "R" "X" = 54.0 SQ. FT.
SHOULDER DIAGONALS (FOR PAVED SHOULDER ≥ 6 FT.)	12 IN. @ 45°	SOLID	WHITE - RIGHT YELLOW - LEFT	50 FT. C-C (LESS THAN 30 M.P.H.) 75 FT. C-C (30 TO 45 M.P.H.) 150 FT. C-C (OVER 45 M.P.H.) MINIMUM OF 5 DIAGONALS

FOR FURTHER DETAILS ON PAVEMENT MARKING REFER TO PART III "MARKINGS" IN THE "ILLINOIS MANUAL ON UNIFORM TRAFFIC CONTROL DEVICES", THE "STANDARD SPECIFICATIONS FOR ROAD AND BRIDGE CONSTRUCTION", AND THE LATEST I.D.O.T. HIGHWAY STANDARD 78000I.

TYPICAL RECESSED PAVEMENT MARKER INSTALLATION

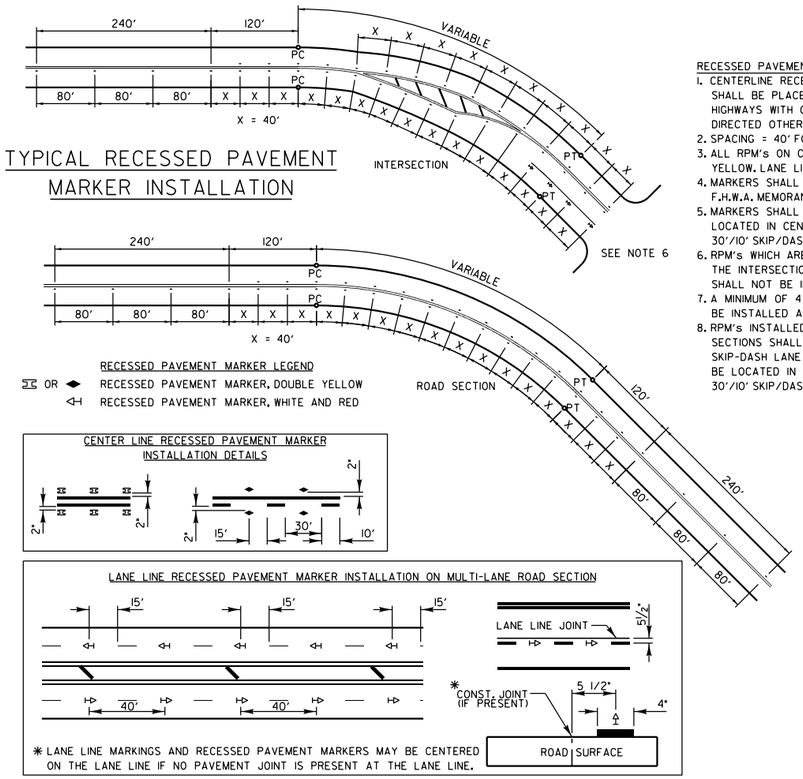

RECESSED PAVEMENT MARKER LEGEND
OR RECESSED PAVEMENT MARKER, DOUBLE YELLOW
RECESSED PAVEMENT MARKER, WHITE AND RED

CENTER LINE RECESSED PAVEMENT MARKER INSTALLATION DETAILS

LANE LINE RECESSED PAVEMENT MARKER INSTALLATION ON MULTI-LANE ROAD SECTION

* LANE LINE MARKINGS AND RECESSED PAVEMENT MARKERS MAY BE CENTERED ON THE LANE LINE IF NO PAVEMENT JOINT IS PRESENT AT THE LANE LINE.

RECESSED PAVEMENT MARKER NOTES:
1. CENTERLINE RECESSED PAVEMENT MARKERS (RPM's) SHALL BE PLACED ON ALL TWO AND THREE LANE HIGHWAYS WITH CURVES OVER 3 1/2 DEGREES, UNLESS DIRECTED OTHERWISE BY THE ENGINEER.
2. SPACING = 40' FOR CENTERLINE MARKERS.
3. ALL RPM's ON CENTERLINE ARE 2-WAY YELLOW. LANE LINE MARKERS ARE WHITE/RED.
4. MARKERS SHALL BE INSTALLED ACCORDING TO F.H.W.A. MEMORANDUM HIO-21.
5. MARKERS SHALL BE FIELD ADJUSTED TO BE LOCATED IN CENTER OF THE 30' GAP OF A 30'/10' SKIP/DASH CENTERLINE.
6. RPM's WHICH ARE TO BE LOCATED WITHIN THE INTERSECTION OF A CROSS STREET, SHALL NOT BE INSTALLED.
7. A MINIMUM OF 4 WHITE/RED MARKERS SHALL BE INSTALLED ALONG THE TURN LANE LINE.
8. RPM's INSTALLED ON MULTI-LANE ROAD SECTIONS SHALL BE INSTALLED ON THE WHITE SKIP-DASH LANE LINE ONLY. THESE RPM's SHALL BE LOCATED IN CENTER OF THE 30' GAP OF A 30'/10' SKIP/DASH LANE LINE.

CROSSWALKS

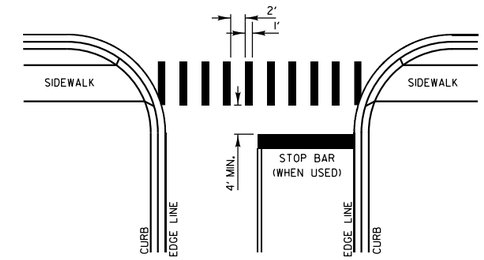

CROSSWALK NOTES:
1. WIDTH OF THE CROSSWALK IS GENERALLY 6' EXCEPT AT SCHOOL CROSSINGS AND BICYCLE CROSSINGS, WHICH CAN BE 8'.
2. THE STOP BAR SHOULD BE INSTALLED A MINIMUM OF 4' IN ADVANCE OF THE CROSSWALK.

CURB MARKING

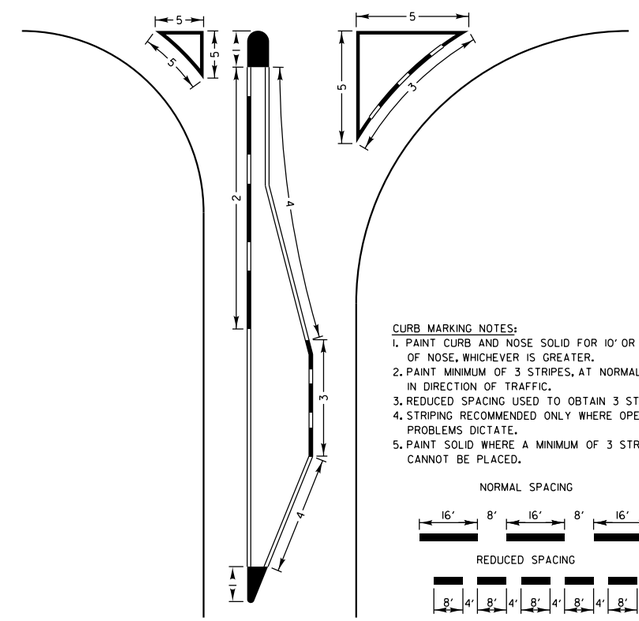

CURB MARKING NOTES:
1. PAINT CURB AND NOSE SOLID FOR 10' OR RADIUS OF NOSE, WHICHEVER IS GREATER.
2. PAINT MINIMUM OF 3 STRIPES, AT NORMAL SPACING, IN DIRECTION OF TRAFFIC.
3. REDUCED SPACING USED TO OBTAIN 3 STRIPE MINIMUM.
4. STRIPING RECOMMENDED ONLY WHERE OPERATIONAL PROBLEMS DICTATE.
5. PAINT SOLID WHERE A MINIMUM OF 3 STRIPES CANNOT BE PLACED.

NORMAL SPACING

REDUCED SPACING

PAVEMENT CROSS SECTION SHOWING TYPICAL PAVEMENT MARKINGS (2-LANE ROADWAY)

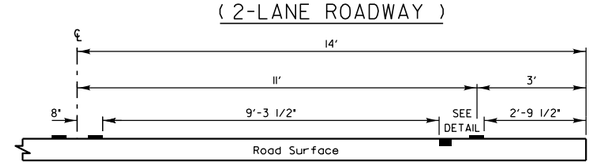

11' LANE WIDTH

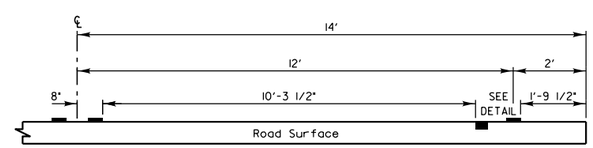

12' LANE WIDTH

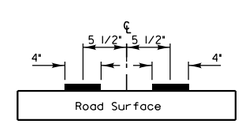

DOUBLE STRIPE CENTERLINE DETAIL

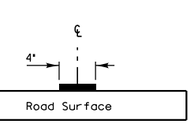

SINGLE STRIPE CENTERLINE DETAIL

NOTE:
CENTERLINE MARKINGS ARE 4" LINES AT 11" CENTERS.

REVISIONS	DATE
SEPARATED RAILROAD SHEET	06/02/08
REVISED RPM DETAILS	07/1/12
RAISED TO RECESSED MARKERS	12/2/13
REMOVE STATION NUMBERS	5/30/14

LakeCounty Division of Transportation

APPROVED BY: A. KHAWAJA
DATE: APRIL 1, 2007

TYPICAL PAVEMENT MARKINGS FOR COUNTY HIGHWAYS

SHEET 2 OF 2

LC7800

REVISIONS / REMARKS					
NO.	DESCRIPTION	DATE	BY	SURVEYOR:	/
		/ /		DSGNR/LIAISON:	
		/ /		PLOTTED BY:	hdmxb 5/29/2015

GRASS LAKE ROAD RESURFACING

LakeCounty Division of Transportation

GRASS LAKE ROAD
LAKE COUNTY STANDARDS & DETAILS

ROUTE	SECTION	SECTION NUMBER	SHEET	SHEETS
CH18	059	14-00059-09-RS	61	85

FILE NAME: U:\Design\Burke\14-00059-09-RS Grass Lake Road Resurfacing\Grass Lake Rd Resurfacing (E of Bridge to IL Rt 59)\Grass Lake Working files\14-00059-09-RS master.dgn

TYPICAL SHORT TERM PAVEMENT MARKINGS

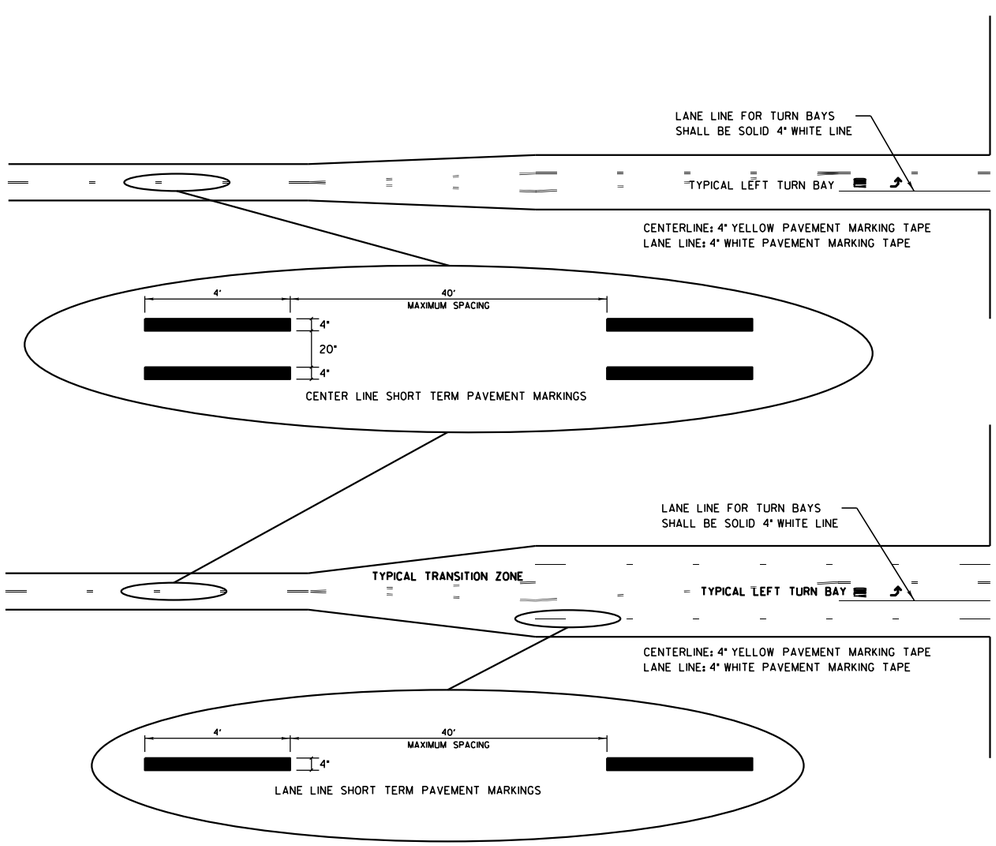

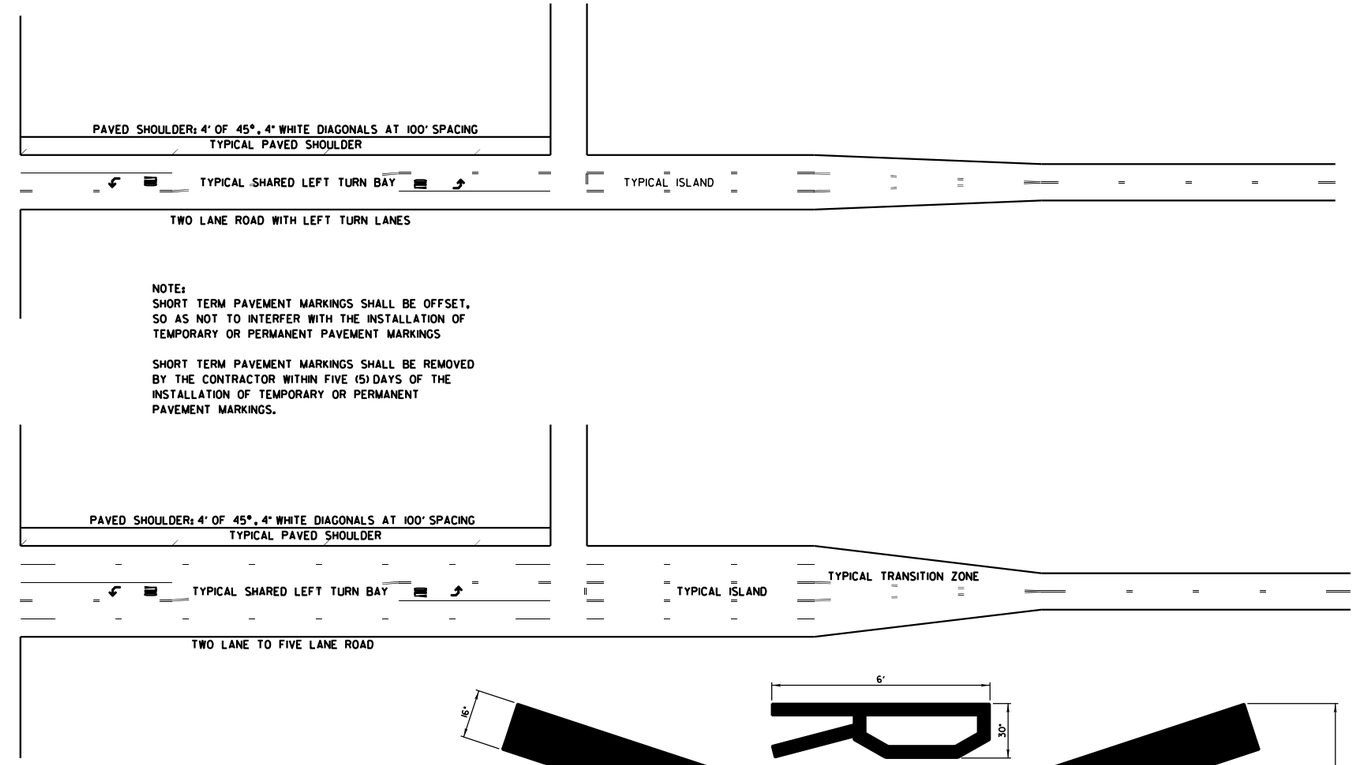

NOTE:
SHORT TERM PAVEMENT MARKINGS SHALL BE OFFSET, SO AS NOT TO INTERFER WITH THE INSTALLATION OF TEMPORARY OR PERMANENT PAVEMENT MARKINGS

SHORT TERM PAVEMENT MARKINGS SHALL BE REMOVED BY THE CONTRACTOR WITHIN FIVE (5) DAYS OF THE INSTALLATION OF TEMPORARY OR PERMANENT PAVEMENT MARKINGS.

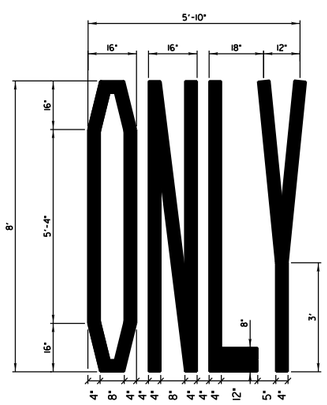

QUANTITY:
4" LINE = 64 FT. (21 SQ. FT.)

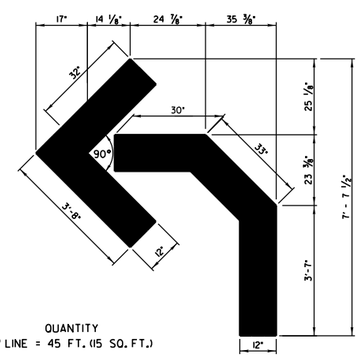

QUANTITY
4" LINE = 45 FT. (15 SQ. FT.)

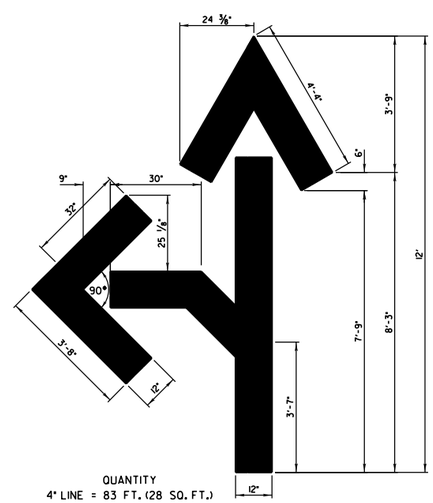

QUANTITY
4" LINE = 83 FT. (28 SQ. FT.)

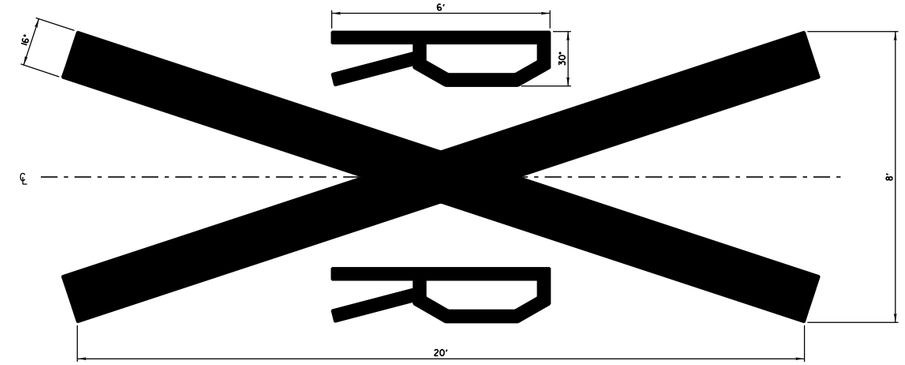

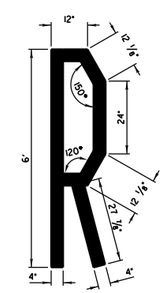

QUANTITY
4" LINE = 200 FT. (67 SQ. FT.)
("X" = 172 FT.)
("R" = 14 FT.)

REVISIONS	DATE
REMOVE DUAL DIMENSIONS	2/18/08

LakeCounty
Division of Transportation

APPROVED BY: A. KHAWAJA
DATE: APRIL 1, 2007

SHORT TERM PAVEMENT MARKINGS

LC7802

REVISIONS / REMARKS					
NO.	DESCRIPTION	DATE	BY	SURVEYOR:	/
		/ /		DSGNR/LIAISON:	
		/ /		PLOTTED BY:	hdmxb 5/29/2015

LakeCounty
Division of Transportation

GRASS LAKE ROAD RESURFACING
LAKE COUNTY STANDARDS & DETAILS

ROUTE	SECTION	SECTION NUMBER	SHEET	SHEETS
CH18	059	14-00059-09-RS	62	85

FILE NAME: U:\Design\Burke\14-00059-09-RS Grass Lake Road Resurfacing\Grass Lake Rd Resurfacing (E of Bridge to IL Rt 59)\Grass Lake Working files\14-00059-09-RS master.dgn

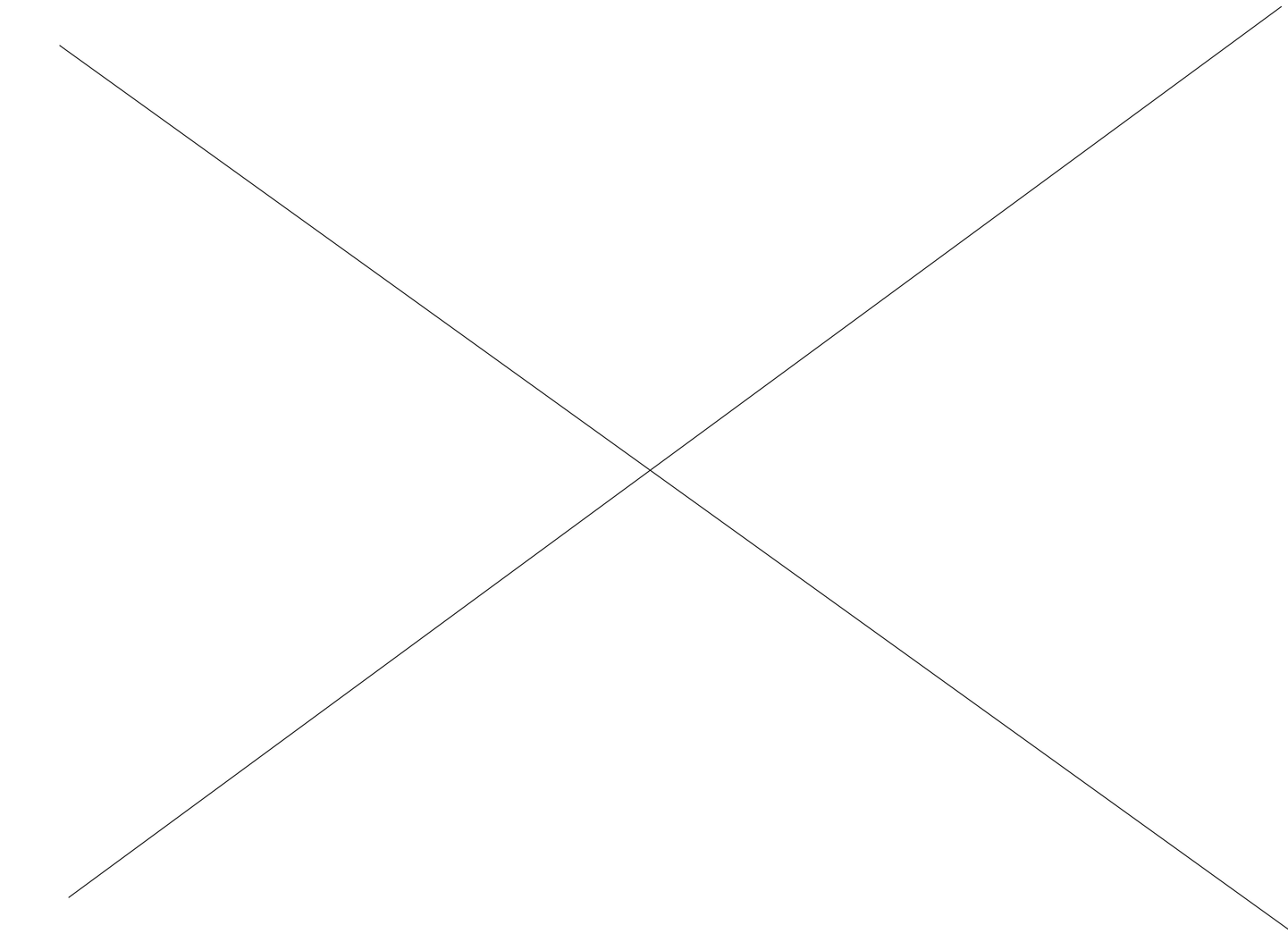

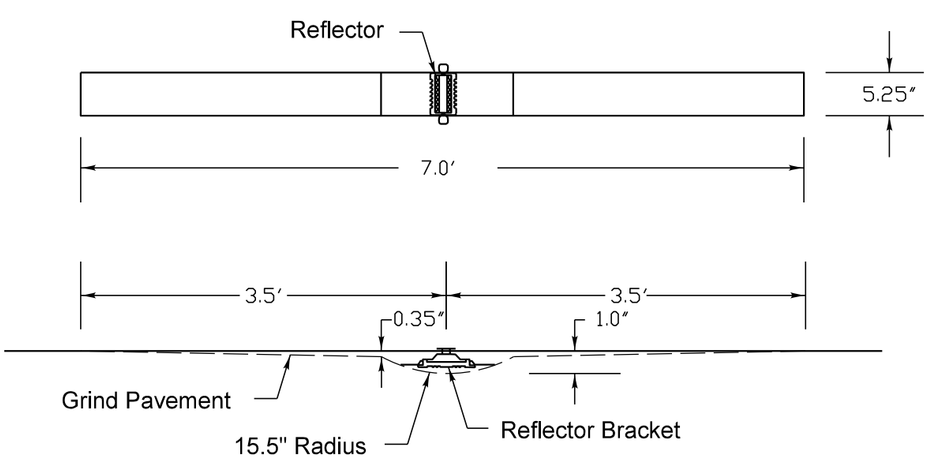

Notes

1. The reflective pavement marker lens shall be a 3M 190 series pavement marker or an approved equal.

2. The reflector bracket shall be made of a polycarbonate and shall be a MarkerOne Series R100 or an approved equal.

3. The adhesive used shall meet the requirements of AASHTO M237 specification for adhesives to be used in cementing asphalt surfaces.

4. Markers shall be placed at 40' intervals on lane lines and painted medians and 40' intervals on curves and approaching intersections as shown on LCDOT standard LC7800.

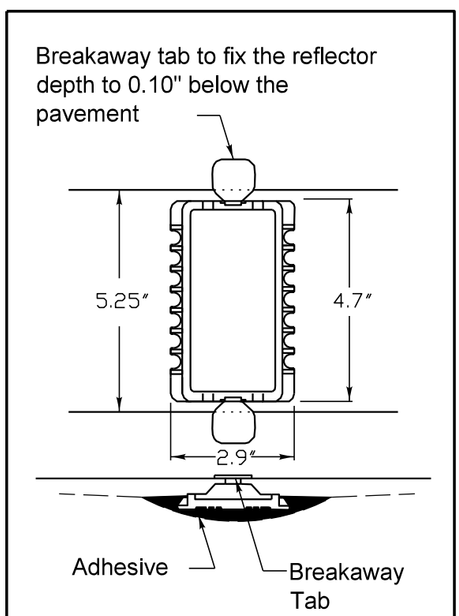

Reflector Bracket Detail

REVISIONS	DATE

LakeCounty Division of Transportation

APPROVED BY: JN
DATE: 12/02/13

RECESSED REFLECTIVE PAVEMENT MARKER

LC7805

REVISIONS / REMARKS

NO.	DESCRIPTION	DATE	BY
		/ /	SURVEYOR: DSGNR/LIAISON: PLOTTED BY: hdmxb 5/29/205

SCALES HORIZ. 0 20 40 VERT. 0 5

GRASS LAKE ROAD RESURFACING

LakeCounty Division of Transportation

LAKE COUNTY STANDARDS AND DETAILS

GRASS LAKE ROAD

ROUTE	SECTION	SECTION NUMBER	SHEET	SHEETS
CH18	59	14-00059-09-RS	63	85

FILE NAME: U:\Design\Burke\14-00059-09-RS Grass Lake Road Resurfacing\Grass Lake Rd Resurfacing IE of Bridge to IL Rt 59\Grass Lake Working files\14-00059-09-RS master.dgn

ABV	ABOVE
A/C	ACCESS CONTROL
AC	ACRE
ADJ	ADJUST
AS	AERIAL SURVEYS
AGG	AGGREGATE
AH	AHEAD
APT	APARTMENT
ASPH	ASPHALT
AUX	AUXILIARY
AGS	AUXILIARY GAS VALVE (SERVICE)
AVE	AVENUE
AX	AXIS OF ROTATION
BK	BACK
B-B	BACK TO BACK
BKPL	BACKPLATE
B	BARN
BARR	BARRICADE
BGN	BEGIN
BM	BENCHMARK
BIND	BINDER
BIT	BITUMINOUS
BTM	BOTTOM
BLVD	BOULEVARD
BRK	BRICK
BBOX	BUFFALO BOX
BLDG	BUILDING
CIP	CAST IRON PIPE
CB	CATCH BASIN
C-C	CENTER TO CENTER
CL	CENTERLINE OR CLEARANCE
CL-E	CENTERLINE TO EDGE
CL-F	CENTERLINE TO FACE
CTS	CENTERS
CERT	CERTIFIED
CHSLD	CHISELED
CS	CITY STREET
CP	CLAY PIPE
CLSD	CLOSED
CLID	CLOSED LID
CT	COAT OR COURT
COMB	COMBINATION
C	COMMERCIAL BUILDING
CE	COMMERCIAL ENTRANCE
CONC	CONCRETE
CONST	CONSTRUCT
CONTD	CONTINUED
CONT	CONTINUOUS
COR	CORNER
CORR	CORRUGATED
CMP	CORRUGATED METAL PIPE
CNTY	COUNTY
CH	COUNTY HIGHWAY
CSE	COURSE
XSECT	CROSS SECTION
m^3	CUBIC METER
mm^3	CUBIC MILLIMETER
CU YD	CUBIC YARD
CULV	CULVERT
C&G	CURB & GUTTER
D	DEGREE OF CURVE
DC	DEPRESSED CURVE
DET	DETECTOR
DIA	DIAMETER
DIST	DISTRICT
DOM	DOMESTIC
DBL	DOUBLE
DSEL	DOWNSTREAM ELEVATION
DSFL	DOWNSTREAM FLOWLINE
DR	DRAINAGE OR DRIVE
DI	DRAINAGE INLET OR DROP INLET
DRV	DRIVEWAY
DCT	DUCT
EA	EACH
EB	EASTBOUND
EOP	EDGE OF PAVEMENT
E-CL	EDGE TO CENTERLINE
E-E	EDGE TO EDGE
EL	ELEVATION
ENTR	ENTRANCE
EXC	EXCAVATION
EX	EXISTING
EXPWAY	EXPRESSWAY
E	EXTERNAL DISTANCE OF HORIZONTAL CURVE
E	OFFSET DISTANCE TO VERTICAL CURVE
F-F	FACE TO FACE
FA	FEDERAL AID
FAI	FEDERAL AID INTERSTATE
FAP	FEDERAL AID PRIMARY
FAS	FEDERAL AID SECONDARY
FAUS	FEDERAL AID URBAN SECONDARY
FP	FENCE POST
FE	FIELD ENTRANCE
FH	FIRE HYDRANT
FL	FLOW LINE
FB	FOOT BRIDGE
FDN	FOUNDATION
FR	FRAME
F&G	FRAME & GRATE
FRWAY	FREEWAY
GAL	GALLON
GALV	GALVANIZED
G	GARAGE
GM	GAS METER
GV	GAS VALVE
GRAN	GRANULAR
GR	GRATE
GRVL	GRAVEL
GND	GROUND
GUT	GUTTER
GP	GUY POLE
GW	GUY WIRE
HH	HANDHOLE
HATCH	HATCHING
HD	HEAD
HDW	HEADWALL
HDUTY	HEAVY DUTY
ha	HECTARE
HMA	HOT MIX ASPHALT
HWY	HIGHWAY
HORIZ	HORIZONTAL
HSE	HOUSE
IL	ILLINOIS
IMP	IMPROVEMENT
IN DIA	INCH DIAMETER
INL	INLET
INST	INSTALLATION
IDS	INTERSECTION DESIGN STUDY
INV	INVERT
IP	IRON PIPE
IR	IRON ROD
JT	JOINT
kg	KILOGRAM
km	KILOMETER
LS	LANDSCAPING
LN	LANE
LT	LEFT
LP	LIGHT POLE
LGT	LIGHTING
LF	LINEAL FEET OR LINEAR FEET
L	LITER OR CURVE LENGTH
LC	LONG CHORD
LNG	LONGITUDINAL
L SUM	LUMP SUM
MACH	MACHINE
MB	MAIL BOX
MH	MANHOLE
MATL	MATERIAL
MED	MEDIAN
m	METER
METH	METHOD
M	MID-ORDINATE
mm	MILLIMETER
mm DIA	MILLIMETER DIAMETER
MIX	MIXTURE
MBH	MOBILE HOME
MOD	MODIFIED
MFT	MOTOR FUEL TAX
N & BC	NAIL & BOTTLE CAP
N & C	NAIL & CAP
N & W	NAIL & WASHER
NOAA	NATIONAL OCEANIC ATMOSPHERIC ADMINISTRATION
NC	NORMAL CROWN
NB	NORTHBOUND
NE	NORTHEAST
NW	NORTHWEST
OLID	OPEN LID
PAT	PATTERN
PVD	PAVED
PVMT	PAVEMENT
PM	PAVEMENT MARKING
PED	PEDESTAL
PNT	POINT
PC	POINT OF CURVATURE
PI	POINT OF INTERSECTION OF HORIZONTAL CURVE
PRC	POINT OF REVERSE CURVE
PT	POINT OF TANGENCY
POT	POINT ON TANGENT
POLYETH	POLYETHYLENE
PCC	PORTLAND CEMENT CONCRETE
PP	POWER POLE OR PRINCIPAL POINT
PRM	PRIME
PE	PRIVATE ENTRANCE
PROF	PROFILE
PGL	PROFILE GRADELINE
PROJ	PROJECT
P.C.	PROPERTY CORNER
PL	PROPERTY LINE
PR	PROPOSED
R	RADIUS
RR	RAILROAD
RRS	RAILROAD SPIKE
RPS	REFERENCE POINT STAKE
REF	REFLECTIVE
RCCP	REINFORCED CONCRETE CULVERT PIPE
REINF	REINFORCEMENT
REM	REMOVAL
RC	REMOVE CROWN
REP	REPLACEMENT
REST	RESTAURANT
RESURF	RESURFACING
RET	RETAINING
RT	RIGHT
ROW	RIGHT-OF-WAY
RD	ROAD
RDWY	ROADWAY
RTE	ROUTE
SAN	SANITARY
SANS	SANITARY SEWER
SEC	SECTION
SEED	SEEDING
SHAP	SHAPING
S	SHED
SH	SHEET
SHLD	SHOULDER
SW	SIDEWALK OR SOUTHWEST
SIG	SIGNAL
SOD	SODDING
SM	SOLID MEDIAN
SB	SOUTHBOUND
SE	SOUTHEAST
SPL	SPECIAL
SD	SPECIAL DITCH
SQ FT	SQUARE FEET
m^2	SQUARE METER
mm^2	SQUARE MILLIMETER
SQ YD	SQUARE YARD
STB	STABILIZED
STD	STANDARD
SBI	STATE BOND ISSUE
SR	STATE ROUTE
STA	STATION
SPBGR	STEEL PLATE BEAM GUARDRAIL
SS	STORM SEWER
STY	STORY
ST	STREET
STR	STRUCTURE
e	SUPERELEVATION RATE
S.E. RUN.	SUPERELEVATION RUNOFF LENGTH
SURF	SURFACE
SMK	SURVEY MARKER
T	TANGENT DISTANCE
T.R.	TANGENT RUNOUT DISTANCE
TEL	TELEPHONE
TB	TELEPHONE BOX
TP	TELEPHONE POLE
TEMP	TEMPORARY
TBM	TEMPORARY BENCH MARK
TD	TILE DRAIN
TBE	TO BE EXTENDED
TBR	TO BE REMOVED
TBS	TO BE SAVED
TWP	TOWNSHIP
TR	TOWNSHIP ROAD
TS	TRAFFIC SIGNAL
TSCB	TRAFFIC SIGNAL CONTROL BOX
TSC	TRAFFIC SYSTEMS CENTER
TRVS	TRANSVERSE
TRVL	TRAVEL
TRN	TURN
TY	TYPE
T-A	TYPE A
TYP	TYPICAL
UNDGND	UNDERGROUND
USGS	U.S. GEOLOGICAL SURVEY
USEL	UPSTREAM ELEVATION
USFL	UPSTREAM FLOWLINE
UTIL	UTILITY
VBOX	VALVE BOX
VV	VALVE VAULT
VLT	VAULT
VEH	VEHICLE
VP	VENT PIPE
VERT	VERTICAL
VC	VERTICAL CURVE
VPC	VERTICAL POINT OF CURVATURE
VPI	VERTICAL POINT OF INTERSECTION
VPT	VERTICAL POINT OF TANGENCY
WM	WATER METER
WV	WATER VALVE
WMAIN	WATER MAIN
WB	WESTBOUND
WILDFL	WILDFLOWERS
W	WITH
WO	WITHOUT

Illinois Department of Transportation

PASSED January 1, 2011
Michael Brand
ENGINEER OF POLICY AND PROCEDURES
APPROVED January 1, 2011
ENGINEER OF DESIGN AND ENVIRONMENT

ISSUED 1-1-97

DATE	REVISIONS
1-1-11	Updated abbreviations
	and symbols.
1-1-08	Updated abbreviations
	and symbols.

STANDARD SYMBOLS, ABBREVIATIONS AND PATTERNS

(Sheet 1 of 8)

STANDARD 000001–06

ADJUSTMENT ITEMS

	EX	PR
Structure To Be Adjusted		ADJ
Structure To Be Cleaned		C
Main Structure To Be Filled		FM
Structure To Be Filled		F
Structure To Be Filled Special		FSP
Structure To Be Removed		R
Structure To Be Reconstructed		REC
Structure To Be Reconstructed Special		RSP
Frame and Grate To Be Adjusted		A
Frame and Lid To Be Adjusted		A
Domestic Service Box To Be Adjusted		A
Valve Vault To Be Adjusted		A
Special Adjustment		SP
Item To Be Abandoned		AB
Item To Be Moved		M
Item To Be Relocated		REL
Pavement Removal and Replacement		

Illinois Department of Transportation

PASSED January 1, 2011
Michael Brand
ENGINEER OF POLICY AND PROCEDURES
APPROVED January 1, 2011
ENGINEER OF DESIGN AND ENVIRONMENT

ISSUED 1-1-97

ALIGNMENT ITEMS

	EX	PR
Baseline		
Centerline		
Centerline Break Circle		
Baseline Symbol		
Centerline Symbol		
PI Indicator		
Point Indicator		
Horizontal Curve Data (Half Size)	CURVE P.I. STA= Δ= D= R= T= L= E= e= T.R.= S.E. RUN= P.C. STA= P.T. STA=	CURVE P.I. STA= Δ= D= R= T= L= E= e= T.R.= S.E. RUN= P.C. STA= P.T. STA=

BOUNDARIES ITEMS

	EX	PR
Dashed Property Line		
Solid Property/Lot Line		
Section/Grant Line		
Quarter Section Line		
Quarter/Quarter Section Line		
County/Township Line		
State Line		
Iron Pipe Found		
Iron Pipe Set		
Survey Marker		
Property Line Symbol		
Same Ownership Symbol (Half Size)		
Northwest Quarter Corner (Half Size)		
Section Corner (Half Size)		
Southeast Quarter Corner (Half Size)		

CONTOUR ITEMS

	EX	PR
Approx. Index Line		
Approx. Intermediate Line		
Index Contour		
Intermediate Contour		

DRAINAGE ITEMS

	EX	PR
Channel or Stream Line		
Culvert Line		
Grading & Shaping Ditches		
Drainage Boundary Line		
Paved Ditch		
Aggregate Ditch		
Pipe Underdrain		
Storm Sewer		
Flowline		
Ditch Check		
Headwall		
Inlet		
Manhole		
Summit		
Roadway Ditch Flow		
Swale		
Catch Basin		
Culvert End Section		
Water Surface Indicator		
Riprap		

STANDARD SYMBOLS, ABBREVIATIONS AND PATTERNS

(Sheet 2 of 8)

STANDARD 000001–06

EROSION & SEDIMENT CONTROL ITEMS	EX	PR
Cleaning & Grading Limits		
Dike		
Erosion Control Fence		
Perimeter Erosion Barrier		
Temporary Fence		
Ditch Check Temporary		
Ditch Check Permanent		
Inlet & Pipe Protection		
Sediment Basin		
Erosion Control Blanket		
Fabric Formed Concrete Revetment Mat		
Turf Reinforcement Mat		
Mulch Temporary		
Mulch Method 1		
Mulch Method 2 Stabilized		
Mulch Method 3 Hydraulic		

NON-HIGHWAY IMPROVEMENT ITEMS	EX	PR
Noise Attn./Levee		
Field Line		
Fence		
Base of Levee		
Mailbox		
Multiple Mailboxes		
Pay Telephone		
Advertising Sign		

LANDSCAPING ITEMS	EX	PR
Contour Mounding Line		
Fence		
Fence Post		
Shrubs		
Mowline		
Perennial Plants		
Seeding Class 2		
Seeding Class 2A		
Seeding Class 4		
Seeding Class 4 & 5 Combined		

EXISTING LANDSCAPING ITEMS (contd.)	EX	PR
Seeding Class 5		
Seeding Class 7		
Seedlings Type 1		
Seedlings Type 2		
Sodding		
Mowstake w/Sign		
Tree Trunk Protection		
Evergreen Tree	E	
Shade Tree	E	+

LIGHTING	EX	PR
Duct		
Conduit		
Electrical Aerial Cable	A	A
Electrical Buried Cable	L	L
Controller		
Underpass Luminaire		
Power Pole		

Illinois Department of Transportation

PASSED January 1, 2011

Michael Brand
ENGINEER OF POLICY AND PROCEDURES

APPROVED January 1, 2011

ENGINEER OF DESIGN AND ENVIRONMENT

ISSUED 1-1-97

STANDARD SYMBOLS, ABBREVIATIONS AND PATTERNS

(Sheet 3 of 8)

STANDARD 000001-06

LIGHTING (contd.)

	EX	PR
Pull Point	Ⓟ	Ⓟ
Handhole		
Heavy Duty Handhole	H	H
Junction Box		
Light Unit Comb.		
Electrical Ground		
Traffic Flow Arrow		
High Mast Pole (Half Size)		
Light Unit-1		

PAVEMENT (MISC.)

	EX	PR
Keyed Long. Joint		
Keyed Long. Joint w/Tie Bars		
Sawed Long. Joint w/Tie Bars		
Bituminous Shoulder		
Bituminous Taper		
Stabilized Driveway		
Widening		

PAVEMENT MARKINGS

	EX	PR
Bike Lane Symbol		
Bike Lane Text		BIKE LANE
Handicap Symbol		
RR Crossing		RR
Raised Marker Amber 1 Way		
Raised Marker Amber 2 Way		
Raised Marker Crystal 1 Way		
Two Way Turn Left		
Shoulder Diag. Pattern		
Skip-Dash White		
Skip-Dash Yellow		
Stop Line		
Solid Line		
Double Centerline		
Dotted Lines		
CL 2Ln 2Way RRPM 12.2 m (40') o.c.		
CL 2Ln 2Way RRPM 80' (24.4 m) o.c.		
CL Multilane Div. RRPM 40' (12.2 m) o.c.		
CL Multilane Div. RRPM 80' (24.4 m) o.c.		
CL Multilane Div. Dbl. RRPM 80' (24.4 m) o.c.		
CL Multilane Undiv.		
Two Way Turn Left Line		

Illinois Department of Transportation

PASSED January 1, 2011
Michael Brand
ENGINEER OF POLICY AND PROCEDURES

APPROVED January 1, 2011
Scott E. Stokes
ENGINEER OF DESIGN AND ENVIRONMENT

ISSUED 1-1-97

STANDARD SYMBOLS, ABBREVIATIONS AND PATTERNS

(Sheet 4 of 8)

STANDARD 000001–06

PAVEMENT MARKINGS (contd.)

	EX	PR
Urban Combination Left		
Urban Combination Right		
Urban Left Turn Arrow		
Urban Right Turn Arrow		
Urban Left Turn Only		
Urban Right Turn Only		
Urban Thru Only		
Urban U-Turn		
Urban Combined U-Turn		
Rural Combination Left		
Rural Combination Right		
Rural Left Turn Arrow		
Rural Right Turn Arrow		
Rural Left Turn Only		
Rural Right Turn Only		
Rural Thru Only		

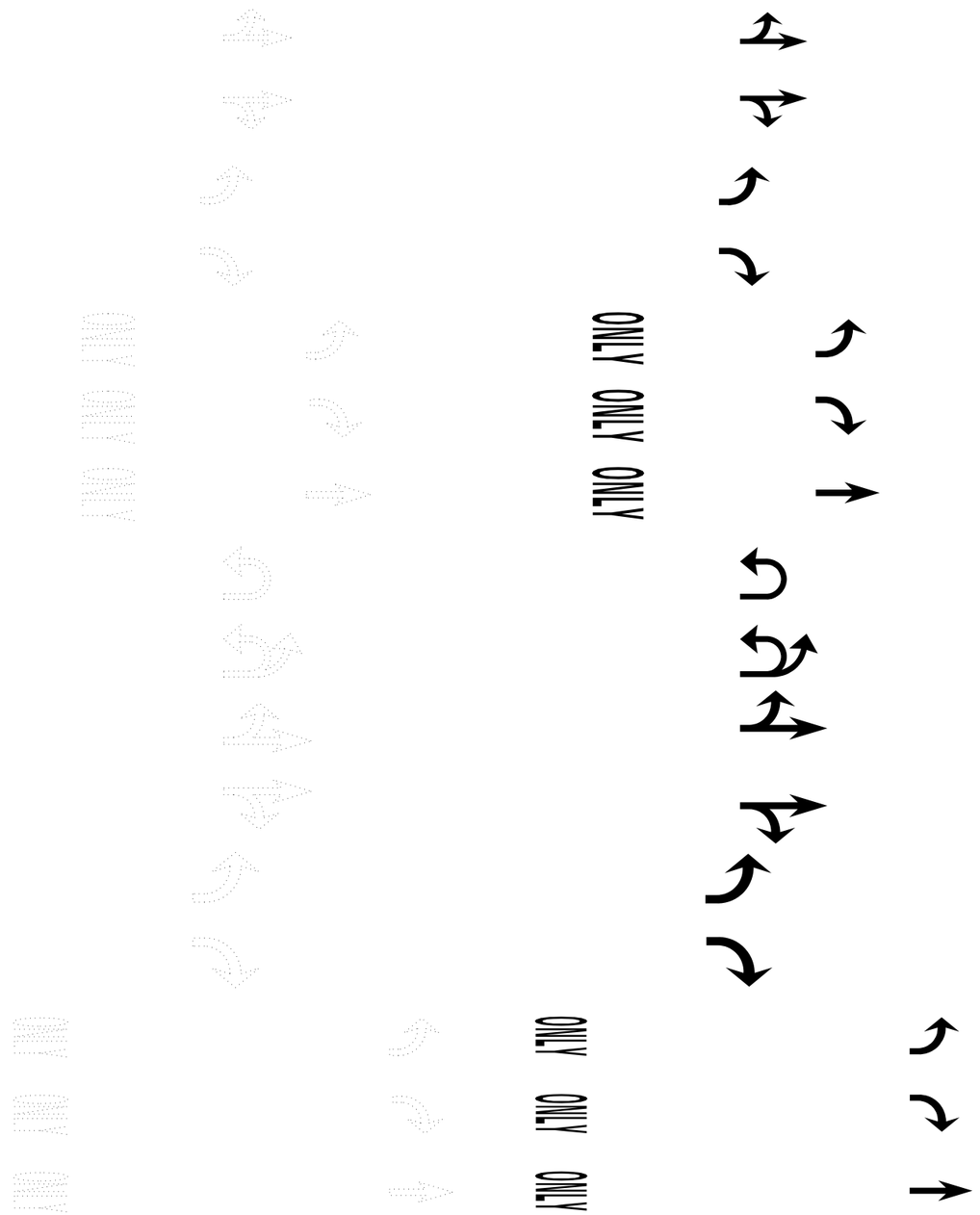

RAILROAD ITEMS	EX	PR
Abandoned Railroad		
Railroad		
Railroad Point		
Control Box		
Crossing Gate		
Flashing Signal		
Railroad Cant. Mast Arm		
Crossbuck		

REMOVAL ITEMS	EX	PR
Removal Tic		
Bituminous Removal		
Hatch Pattern		
Tree Removal Single		

RIGHT OF WAY ITEMS	EX	PR
Future ROW Corner Monument		
ROW Marker		
ROW Line		
Easement		
Temporary Easement		

Illinois Department of Transportation

PASSED January 1, 2011
Michael Brand
ENGINEER OF POLICY AND PROCEDURES
APPROVED January 1, 2011
Scott E. Stokes
ENGINEER OF DESIGN AND ENVIRONMENT

ISSUED 1-1-97

STANDARD SYMBOLS, ABBREVIATIONS AND PATTERNS

(Sheet 5 of 8)

STANDARD 000001–06

RIGHT OF WAY ITEMS (contd.)

	EX	PR
Access Control Line	AC	AC
Access Control Line & ROW	AC	AC
Access Control Line & ROW with Fence	AR	AC
Excess ROW Line		XS

ROADWAY PLAN ITEMS

	EX	PR
Cable Barrier		
Concrete Barrier		
Edge of Pavement		
Bit Shoulders, Medians and C&G Line		
Aggregate Shoulder		
Sidewalks, Driveways		
Guardrail		
Guardrail Post		
Traffic Sign		
Corrugated Median		
Impact Attenuator		
North Arrow with District Office (Half Size)	N	
Match Line		STA. 45+00
Slope Limit Line		
Typical Cross-Section Line		

ROADWAY PROFILES

	EX	PR
P.I. Indicator		
Point Indicator		
Earthworks Balance Point		
Begin Point		
Vert. Curve Data	VPI = ELEV= L = E =	VPI = ELEV= L = E =
Ditch Profile Left Side		
Ditch Profile Right Side		
Roadway Profile Line		
Storm Sewer Profile Left Side		
Storm Sewer Profile Right Side		

SIGNING ITEMS

	EX	PR
Cone, Drum or Barricade		
Barricade Type II		
Barricade Type III		
Barricade With Edge Line		
Flashing Light Sign		
Panels I		
Panels II		
Direction of Traffic		
Sign Flag (Half Size)		

SIGNING ITEMS (contd.)

	EX	PR
Reverse Left W1-4L (Half Size)		
Reverse Right W1-4R (Half Size)		
Two Way Traffic Sign W6-3 (Half Size)		
Detour Ahead W20-2(0) (Half Size)		DETOUR AHEAD
Left Lane Closed Ahead W20-5L(0) (Half Size)		LEFT LANE CLOSED AHEAD
Right Lane Closed Ahead W20-5R(0) (Half Size)		RIGHT LANE CLOSED AHEAD
Road Closed Ahead W20-3(0) (Half Size)		ROAD CLOSED AHEAD
Road Construction Ahead W20-1-(0) (Half Size)		ROAD CONSTRUCTION AHEAD
Single Lane Ahead (Half Size)		SINGLE LANE AHEAD
Transition Left W4-2L (Half Size)		
Transition Right W4-2R (Half Size)		

Illinois Department of Transportation

PASSED January 1, 2011
Michael Brand
ENGINEER OF POLICY AND PROCEDURES

APPROVED January 1, 2011
ENGINEER OF DESIGN AND ENVIRONMENT

ISSUED 1-1-97

STANDARD SYMBOLS, ABBREVIATIONS AND PATTERNS

(Sheet 6 of 8)

STANDARD 000001–06

SIGNING ITEMS (contd.)

	EX	PR
One Way Arrow Lrg. W1-6-(0) (Half Size)		
Two Way Arrow Large W1-7-(0) (Half Size)		
Detour M4-10L-(0) (Half Size)		DETOUR
Detour M4-10R-(0) (Half Size)		DETOUR
One Way Left R6-1L (Half Size)		ONE WAY
One Way Right R6-1R (Half Size)		ONE WAY
Left Turn Lane R3-I100L (Half Size)		LEFT TURN LANE
Keep Left R4-7AL (Half Size)		KEEP LEFT
Keep Left R4-7BL (Half Size)		KEEP LEFT
Keep Right R4-7AR (Half Size)		KEEP RIGHT
Keep Right R4-7BR (Half Size)		KEEP RIGHT
Stop Here On Red R10-6-AL (Half Size)		STOP HERE ON RED
Stop Here On Red R10-6-AR (Half Size)		STOP HERE ON RED
No Left Turn R3-2 (Half Size)		
No Right Turn R3-1 (Half Size)		
Road Closed R11-2 (Half Size)		ROAD CLOSED
Road Closed Thru Traffic R11-2 (Half Size)		ROAD CLOSED TO THRU TRAFFIC

Illinois Department of Transportation

PASSED January 1, 2011

Michael Brand

ENGINEER OF POLICY AND PROCEDURES

APPROVED January 1, 2011

ENGINEER OF DESIGN AND ENVIRONMENT

ISSUED 1-1-97

STRUCTURES ITEMS

	EX	PR
Box Culvert Barrel		
Box Culvert Headwall		
Bridge Pier		
Bridge		
Retaining Wall		
Temporary Sheet Piling		

TRAFFIC SHEET ITEMS

	EX	PR
Cable Number		
Left Turn Green	G	G
Left Turn Yellow	Y	Y
Signal Backplate		
Signal Section 8" (200 mm)		
Signal Section 12" (300 mm)		
Walk/Don't Walk Letters	DW W	DW W
Walk/Don't Walk Symbols		

TRAFFIC SIGNAL ITEMS

	EX	PR
Galv. Steel Conduit		
Underground Cable		
Detector Loop Line		
Detector Loop Large		
Detector Loop Small		
Detector Loop Quadrapole		

STANDARD SYMBOLS, ABBREVIATIONS AND PATTERNS

(Sheet 7 of 8)

STANDARD 000001–06

TRAFFIC SIGNAL ITEMS (contd.)

	EX	PR
Detector Raceway	"E"	
Aluminum Mast Arm		
Steel Mast Arm		
Veh. Detector Magnetic		
Conduit Splice		
Controller		
Gulfbox Junction		
Wood Pole		
Temp. Signal Head		
Handhole		
Double Handhole		
Heavy Duty Handhole	H	H
Junction Box		
Ped. Pushbutton Detector		
Ped. Signal Head		
Power Pole Service		
Priority Veh. Detector		
Signal Head		
Signal Head w/Backplate		
Signal Post		
Closed Circuit TV	C	C
Video Detector System	V	V

Illinois Department of Transportation

PASSED January 1, 2011
Michael Brand
ENGINEER OF POLICY AND PROCEDURES
APPROVED January 1, 2011
ENGINEER OF DESIGN AND ENVIRONMENT

ISSUED 1-1-97

UNDERGROUND UTILITY ITEMS

	EX	PR	ABANDONED
Cable TV	CTV	CTV	CTV
Electric Cable	E	E	E
Fiber Optic	FO	FO	FO
Gas Pipe	G	G	G
Oil Pipe	O	O	O
Sanitary Sewer			
Telephone Cable	T	T	T
Water Pipe	W	W	W

UTILITIES ITEMS

	EX	PR
Controller		
Double Handhole		
Fire Hydrant		
GuyWire or Deadman Anchor		
Handhole		
Heavy Duty Handhole	H	H
Junction Box		
Light Pole		
Manhole		
Pipeline Warning Sign		
Power Pole		
Power Pole with Light		
Sanitary Sewer Cleanout		
Splice Box Above Ground		
Telephone Splice Box Above Ground		
Telephone Pole		

UTILITY ITEMS (contd.)

	EX	PR
Traffic Signal		
Traffic Signal Control Box	TS	
Water Meter		
Water Meter Valve Box		
Profile Line		
Aerial Power Line	A A	A A

VEGETATION ITEMS

	EX	PR
Deciduous Tree		
Bush or Shrub		
Evergreen Tree		
Stump		
Orchard/Nursery Line		
Vegetation Line		
Woods & Bush Line		

WATER FEATURE ITEMS

	EX	PR
Stream or Drainage Ditch		
Waters Edge		
Water Surface Indicator		
Water Point		
Disappearing Ditch		
Marsh		
Marsh/Swamp Boundary		

STANDARD SYMBOLS, ABBREVIATIONS AND PATTERNS

(Sheet 8 of 8)

STANDARD 000001–06

CLASS C

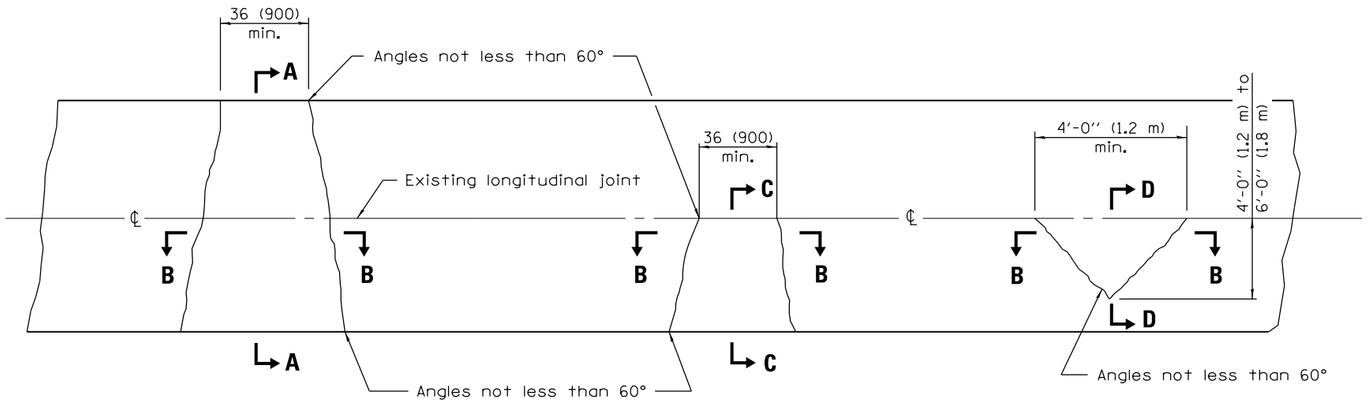

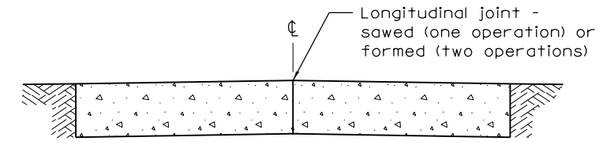

SECTION A–A

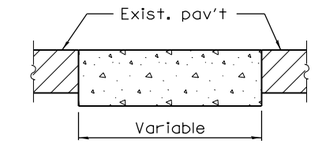

SECTION B–B

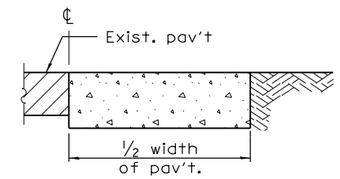

SECTION C–C

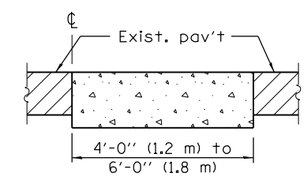

SECTION D–D

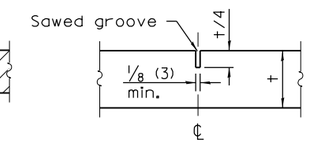

DETAIL OF SAWED CONTRACTION JOINT

Note:
Longitudinal joints shall be as detailed on Standard 420001, except tie bars are not required for patches 20'-0" (6.0 m) or less in length.

CLASS D

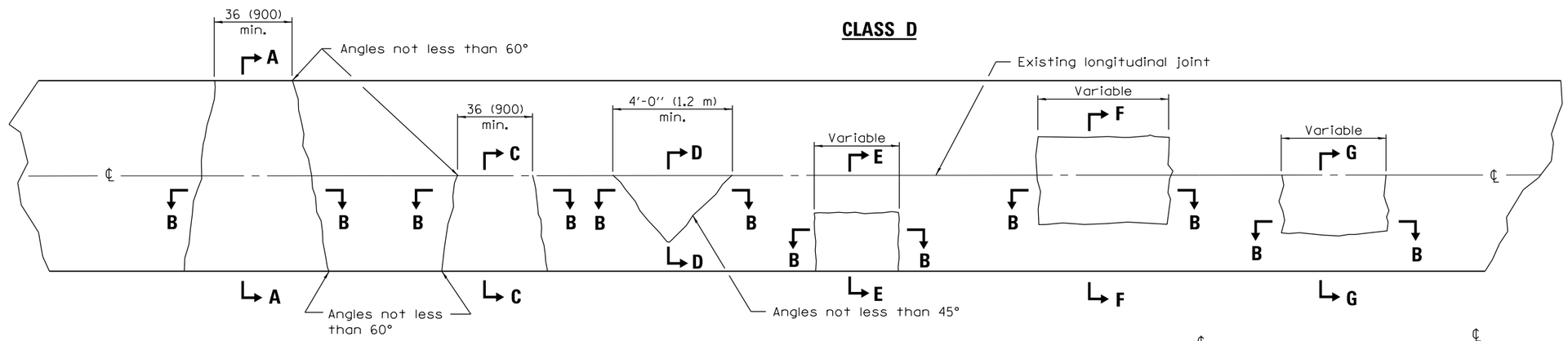

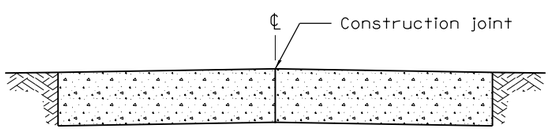

SECTION A–A
(Built in two operations)

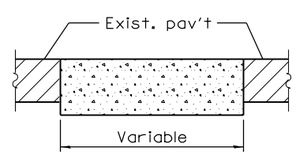

SECTION B–B

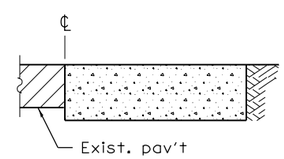

SECTION C–C

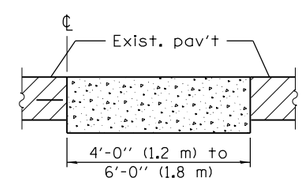

SECTION D–D

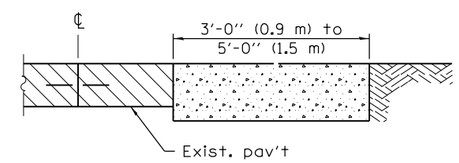

SECTION E–E

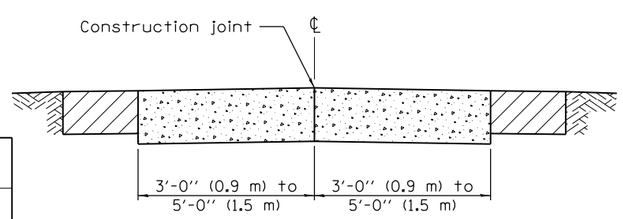

SECTION F–F
(Built in two operations)

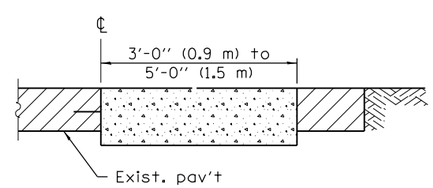

SECTION G–G

GENERAL NOTES

Existing tie bars shall be either cut or removed. Marginal bars shall be cut.

All dimensions are in inches (millimeters) unless otherwise shown.

Illinois Department of Transportation

PASSED January 1, 2008
ENGINEER OF POLICY AND PROCEDURES
APPROVED January 1, 2008
ENGINEER OF DESIGN AND ENVIRONMENT

ISSUED 1-1-97

DATE	REVISIONS
1-1-08	Switched units to
	English (metric).
1-1-07	Revised Note for
	Class C patches.

CLASS C and D PATCHES

STANDARD 442201–03

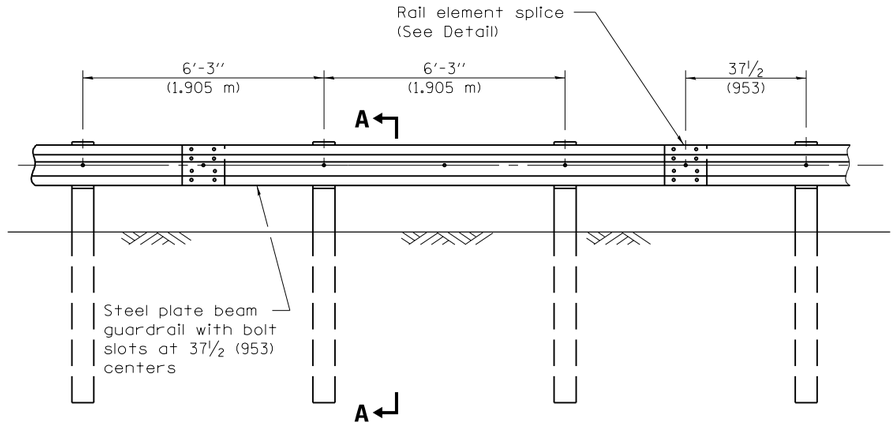

ELEVATION

TYPE A

6'-3" (1.905 m) Typical post spacing

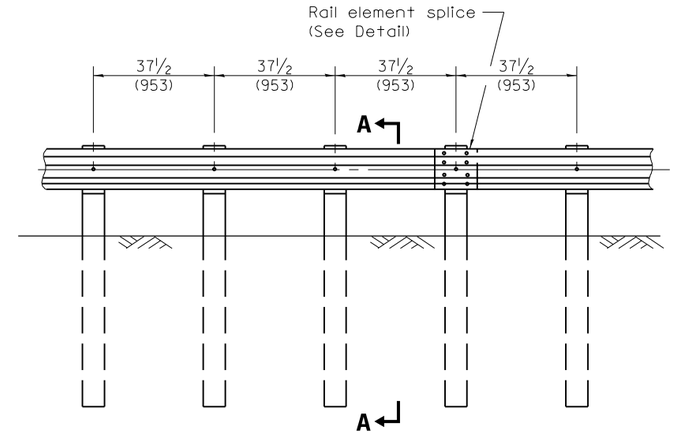

ELEVATION

TYPE B

37½ (953) Closed post spacing

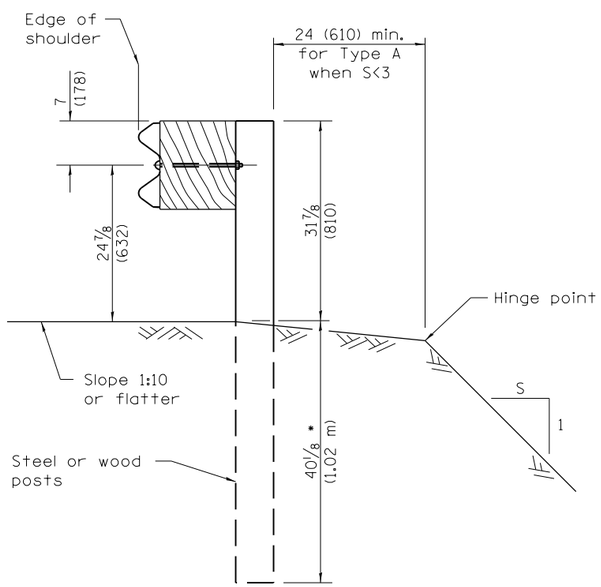

SECTION A–A

* When "S" is less than 3 and the distance from the back of post is less than 24 (610), the post shall be steel and the embedment shall be 76⅛ (1934).

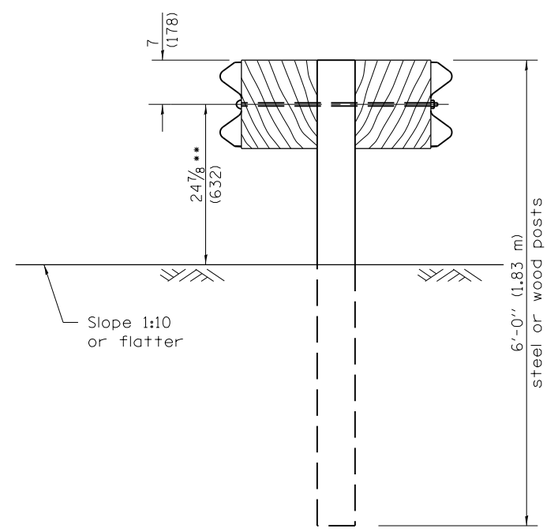

SECTION B–B

** When connecting Type D guardrail to an impact attenuator, adjust this dimension to 21⅞ (556) over a distance of 25'-0" (7.62 m) from point of connection.

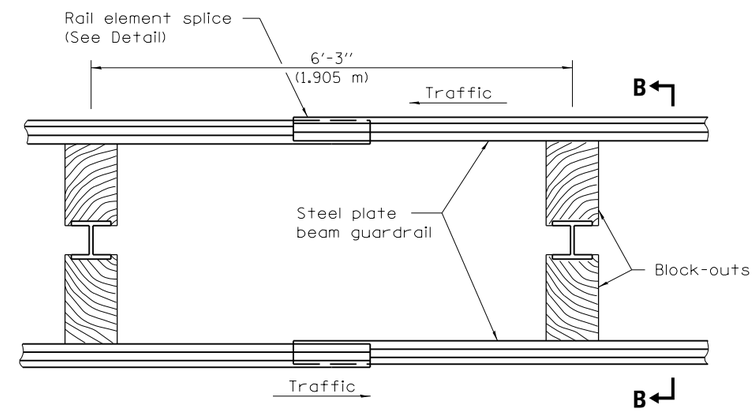

PLAN

TYPE D

Double steel plate beam guardrail
6'-3" (1.905 m) typical post spacing

GENERAL NOTES

All slope ratios are expressed as units of vertical displacement to units of horizontal displacement (V:H).

All dimensions are in inches (millimeters) unless otherwise shown.

Illinois Department of Transportation

PASSED January 1, 2012
Michael Brand
ENGINEER OF POLICY AND PROCEDURES

APPROVED January 1, 2012
Scott E. Stokes
ENGINEER OF DESIGN AND ENVIRONMENT

ISSUED 1-1-97

DATE	REVISIONS
1-1-12	Added req. for 9 ft. posts
	to be steel. Modified set
	back of g'rail behind curb.
1-1-11	Added note to Section B-B
	for conn. to impact att.
	Revised table on Sheet 4.

STEEL PLATE BEAM GUARDRAIL

(Sheet 1 of 4)

STANDARD 630001–10

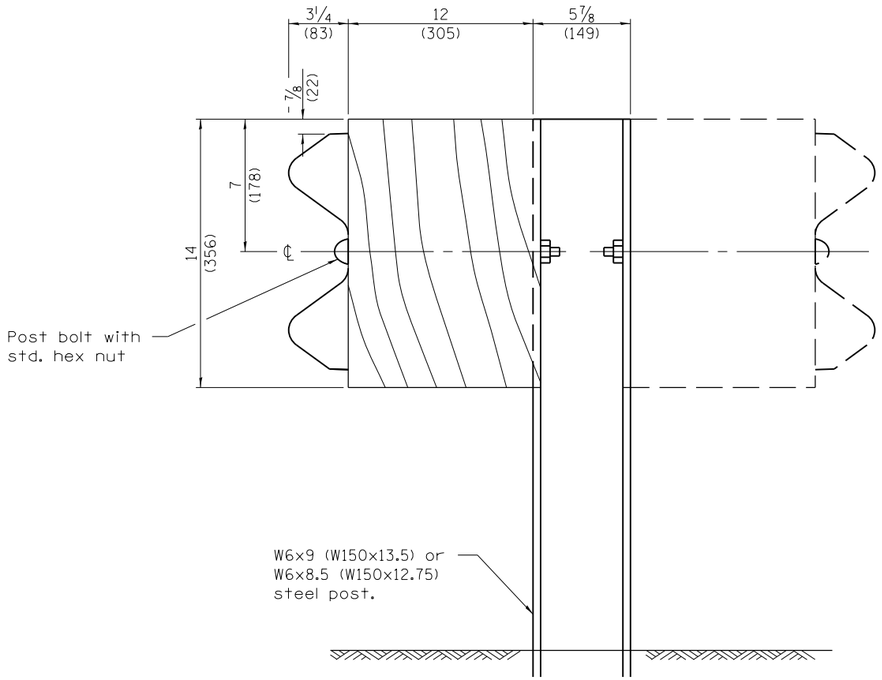

STEEL POST CONSTRUCTION

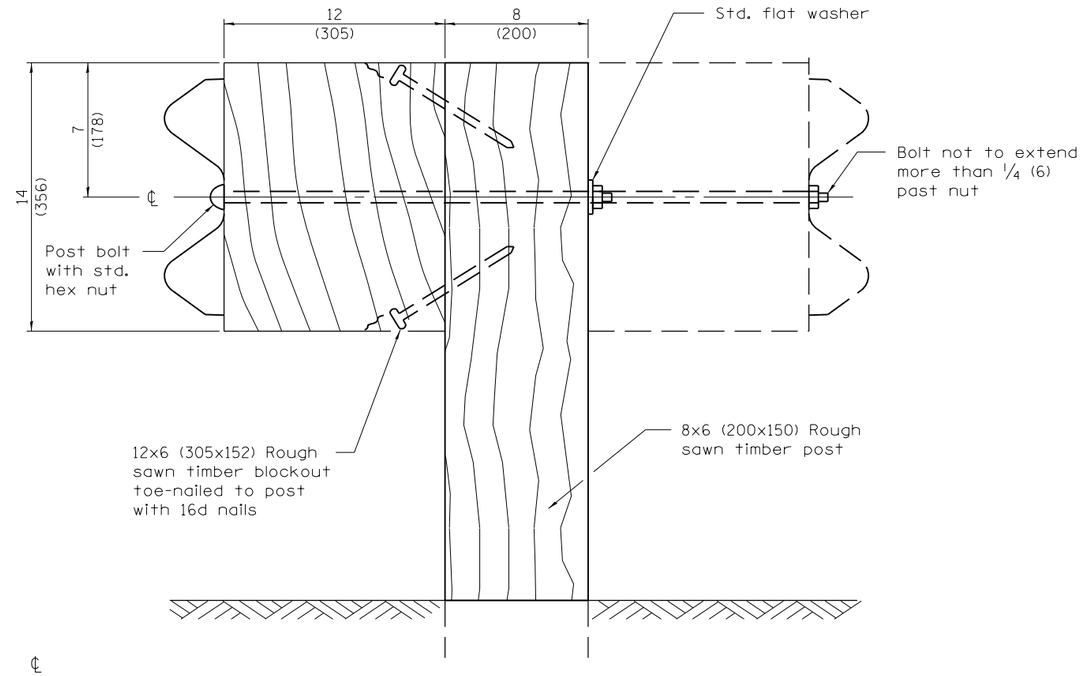

WOOD POST CONSTRUCTION

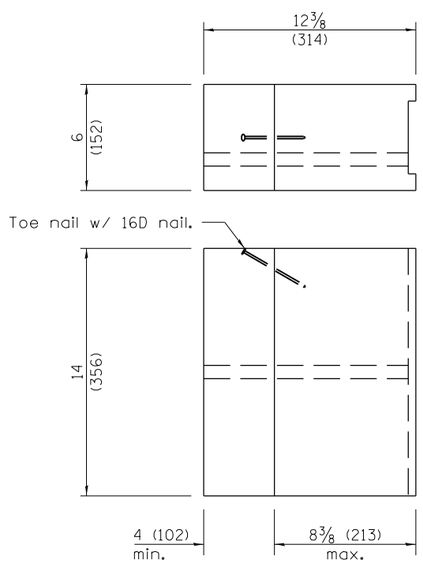

TWO-PIECE WOOD BLOCKOUT OPTION

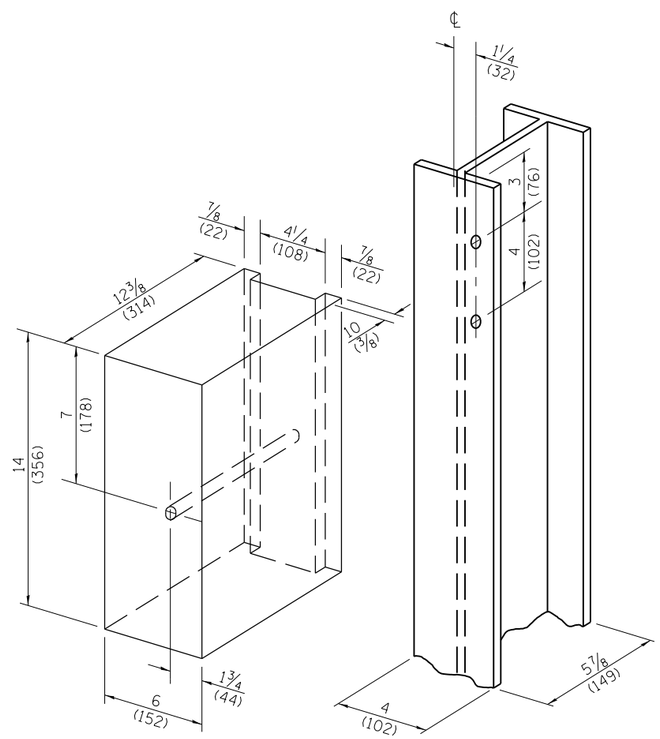

Note:
All holes ¾ (20) dia.

WOOD BLOCK-OUT AND STEEL POST DETAILS

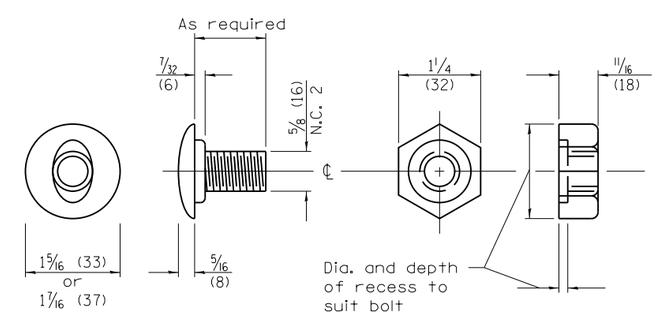

POST OR SPLICE BOLT & NUT

Illinois Department of Transportation

PASSED January 1, 2012
ENGINEER OF POLICY AND PROCEDURES
APPROVED January 1, 2012
ENGINEER OF DESIGN AND ENVIRONMENT

ISSUED 1-1-97

STEEL PLATE BEAM GUARDRAIL

(Sheet 2 of 4)

STANDARD 630001-10

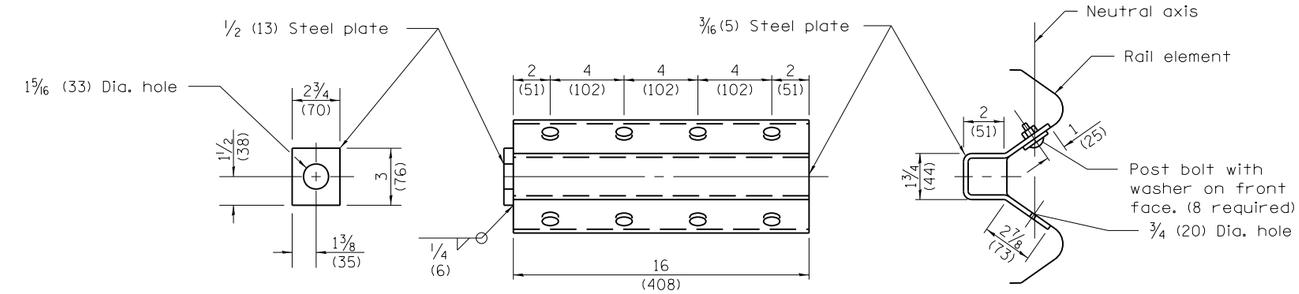

NOTE
Anchor plate T shall be used to attach cable assembly to guardrail when required on traffic barrier terminals.

ANCHOR PLATE T DETAILS

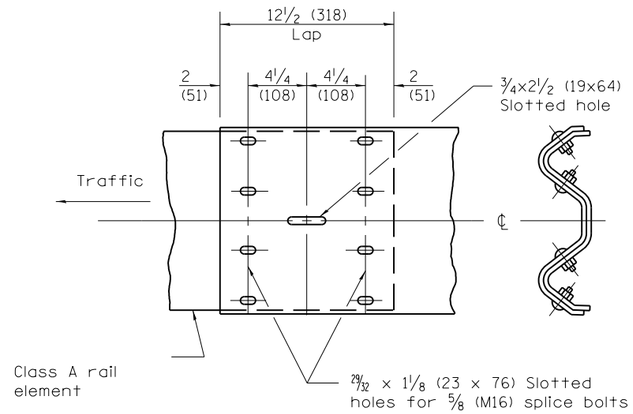

RAIL ELEMENT SPLICE

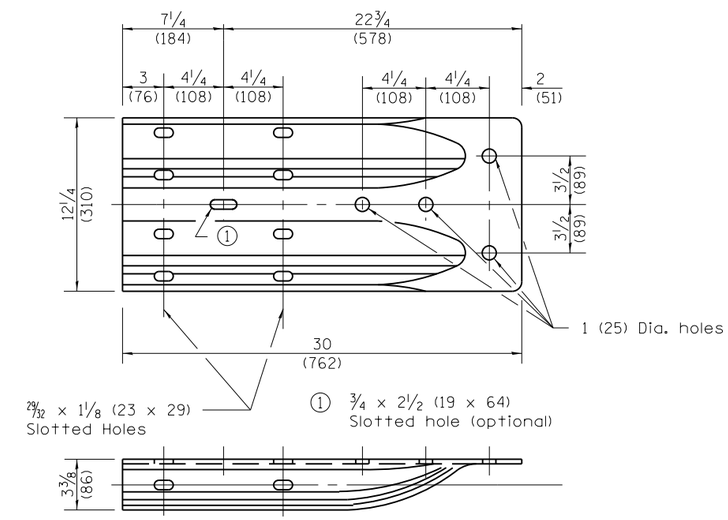

ALTERNATE END SHOE

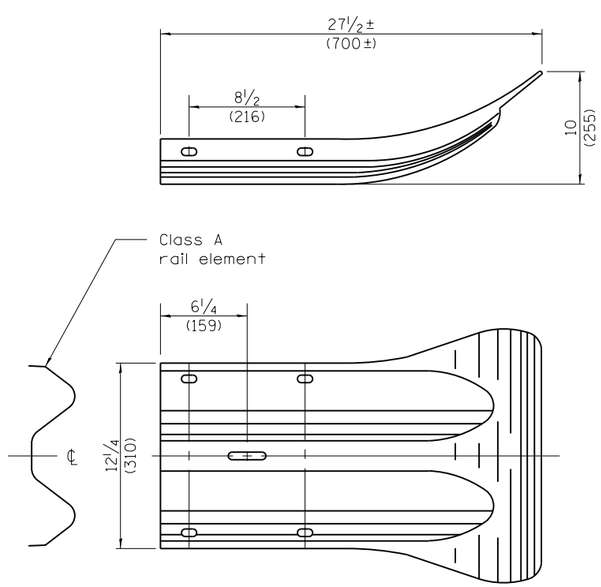

END SECTION

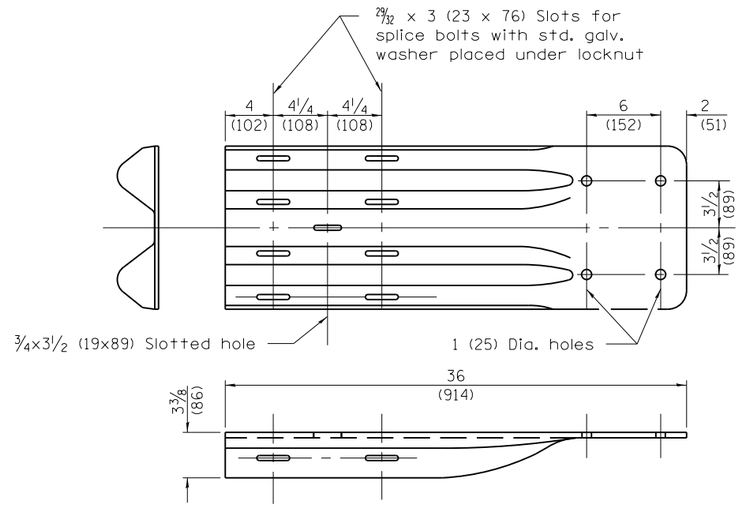

NOTE
When end shoe is attached to a bridge parapet which has an expansion joint, the bolts shall be provided with a locknut or double nut and shall be tightened only to a point that will allow guardrail movement.

The standard end shoe shall be attached to the concrete with pre-drilled or self-drilling anchor bolts. The anchor cone shall be set flush with the surface of the concrete.

Externally threaded studs protruding from the surface of the concrete will not be permitted.

END SHOE

Illinois Department of Transportation

PASSED January 1, 2012
ENGINEER OF POLICY AND PROCEDURES
APPROVED January 1, 2012
ENGINEER OF DESIGN AND ENVIRONMENT

ISSUED 1-1-97

STEEL PLATE BEAM GUARDRAIL

(Sheet 3 of 4)

STANDARD 630001–10

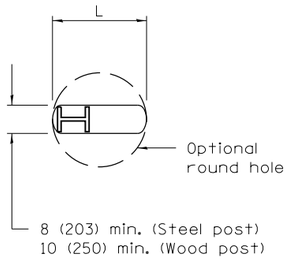

PLAN

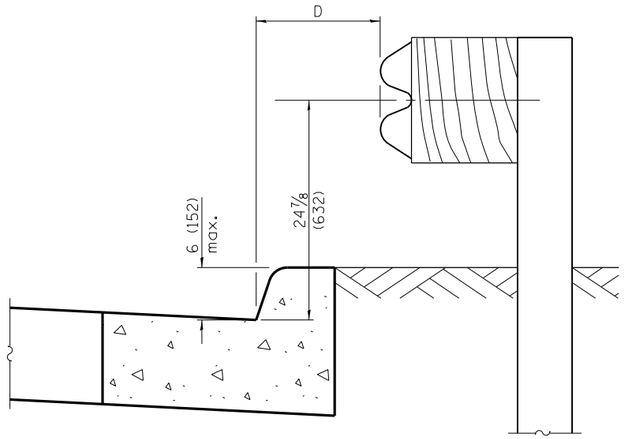

0 ≤ D < 4'–0" (1.2 m)

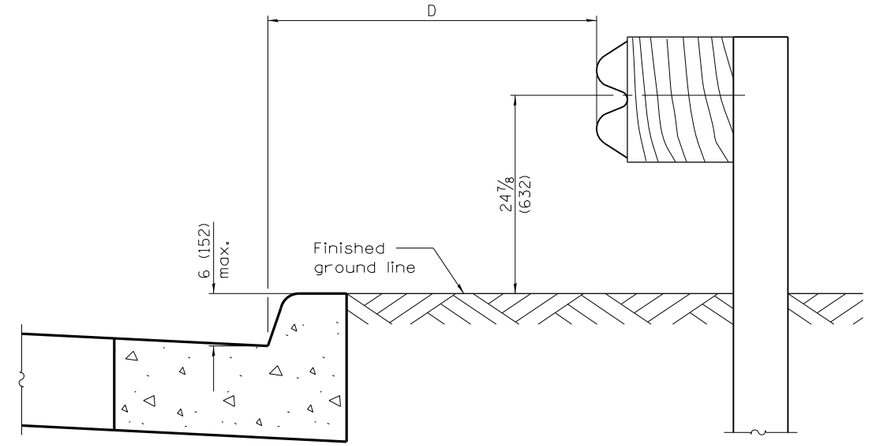

4'–0" (1.2 m) ≤ D ≤ 12'–0" (3.7 m)

GUARDRAIL PLACED BEHIND CURB

Note: 'D' shall not exceed 6 (152) for design speeds greater than 45 mph.

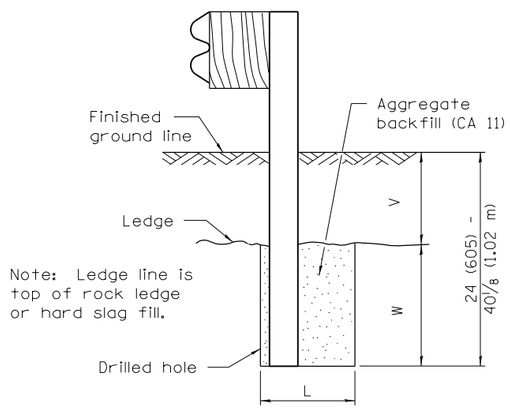

ELEVATION

FOOTING FOR POST WHEN IMPERVIOUS MATERIAL IS ENCOUNTERED

V	W	L	
		Steel Post	Wood Post
0 - 6 (0 - 152)	24 (610)	21 (530)	23 (580)
> 6 - 18 (> 152 - 458)	18 (458)	14 1/2 (368)	16 1/2 (419)
> 18 - 31 (> 458 - 787)	12 (305)	8 (203)	10 (250)
> 31 - 40 1/8 (> 787 - 1.02 m)	12 - 0 (305 - 0)	8 (203)	10 (250)

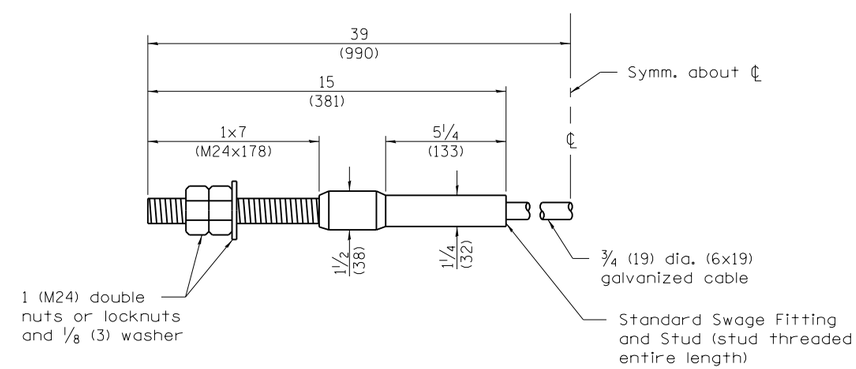

CABLE ASSEMBLY

(40,000 lbs. (18,100 kg) min. breaking strength)
Tighten to taut tension.

Illinois Department of Transportation

PASSED January 1, 2012
Michael Brand
ENGINEER OF POLICY AND PROCEDURES
APPROVED January 1, 2012
ENGINEER OF DESIGN AND ENVIRONMENT

ISSUED 1-1-97

STEEL PLATE BEAM GUARDRAIL

(Sheet 4 of 4)

STANDARD 630001–10

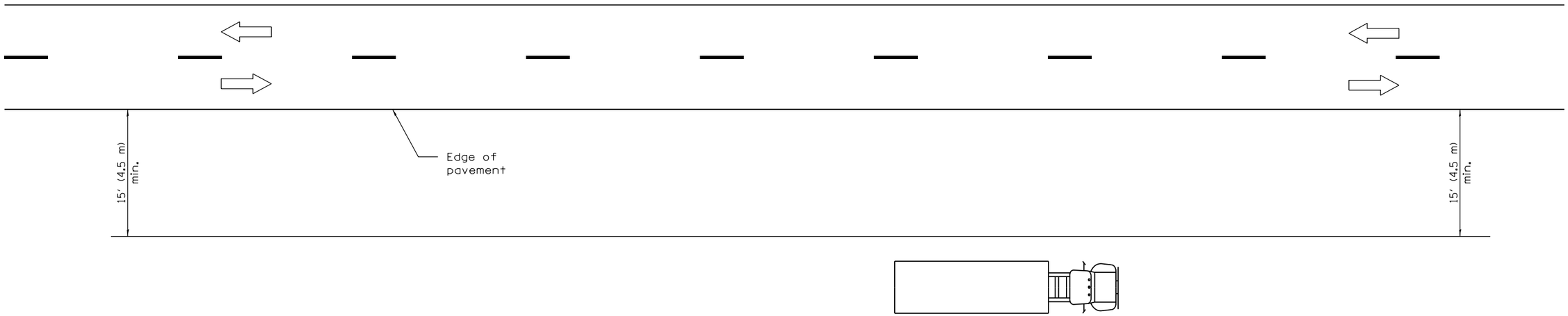

TYPICAL APPLICATIONS

Landscaping work

Utility work

Fencing contracts and maintenance

Cleaning culverts

GENERAL NOTES

This Standard is used where at all times all vehicles, equipment, workers or their activities are more than 15′ (4.5 m) from the edge of pavement.

When the work operation requires that two or more work vehicles cross the 15′ (4.5 m) clear zone in any one hour, traffic control shall be according to Standard 701006.

All dimensions are in inches (millimeters) unless otherwise shown.

Illinois Department of Transportation

APPROVED January 1, 2009
ENGINEER OF OPERATIONS

APPROVED January 1, 2009
ENGINEER OF DESIGN AND ENVIRONMENT

ISSUED 1-1-97

DATE	REVISIONS
1-1-09	Switched units to
	English (metric).
1-1-05	Revised title and notes.

OFF–RD OPERATIONS, 2L, 2W, MORE THAN 15′ (4.5 m) AWAY

STANDARD 701001–02

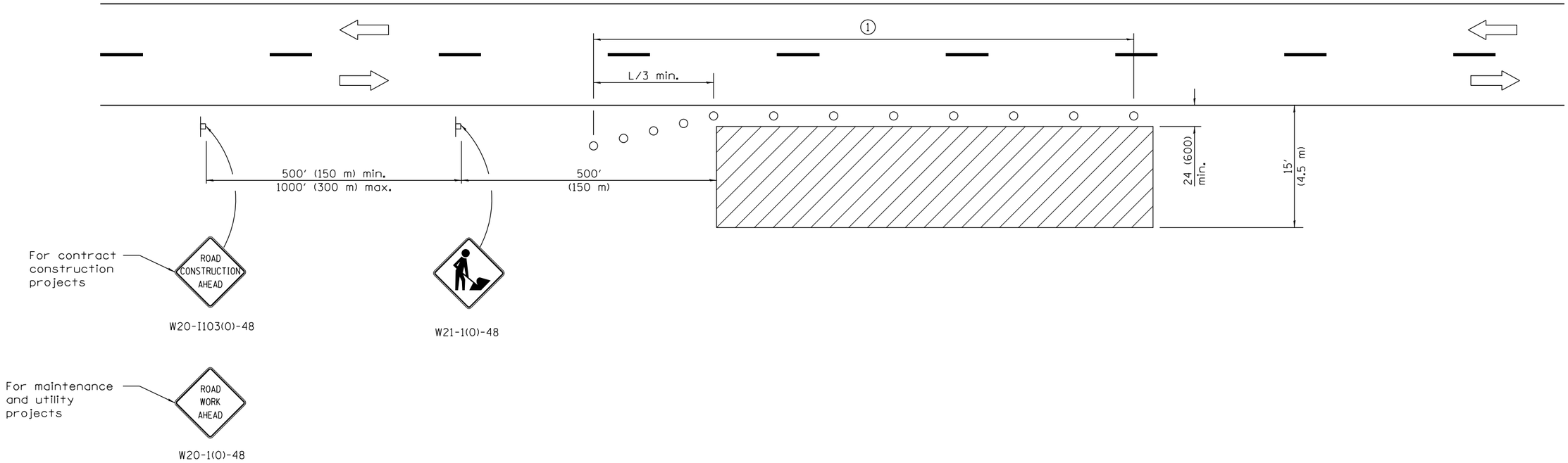

TYPICAL APPLICATIONS

Utility operations
Culvert extensions
Side slope changes
Guardrail installation and maintenance
Delineator installation
Landscaping operations
Shoulder repair
Sign installation and maintenance

SYMBOLS

Work area

Sign

Cone, drum or barricade

① When the work operation exceeds one hour, cones, drums or barricades shall be placed at 25′ (8 m) centers for L/3 distance, and at 50′ (15 m) centers through the remainder of the work area.

GENERAL NOTES

This Standard is used where any vehicles, equipment, workers or their activities will encroach in the area 15′ (4.5 m) to 24 (600) from the edge of pavement.

Calculate L as follows:

SPEED LIMIT	FORMULAS English	FORMULAS (Metric)
40 mph (70 km/h) or less:	$L=\frac{WS^2}{60}$	$L=\frac{WS^2}{150}$
45 mph (80 km/h) or greater:	L=(W)(S)	L=0.65(W)(S)

W = Width of offset in feet (meters).

S = Normal posted speed mph (km/h).

All dimensions are in inches (millimeters) unless otherwise shown.

Illinois Department of Transportation

APPROVED January 1, 2014
ENGINEER OF SAFETY ENGINEERING

APPROVED January 1, 2014
ENGINEER OF DESIGN AND ENVIRONMENT

ISSUED 1-1-97

DATE	REVISIONS
1-1-14	Revised workers sign
	number to agree with
	current MUTCD.
1-1-13	Omitted text 'WORKERS'
	sign.

OFF–RD OPERATIONS, 2L, 2W, 15′ (4.5 m) TO 24″ (600 mm) FROM PAVEMENT EDGE

STANDARD 701006–05

For any operation that encroaches in the area between the centerline and a line 24 (600) outside the edge of the pavement for a period of less than 15 minutes.

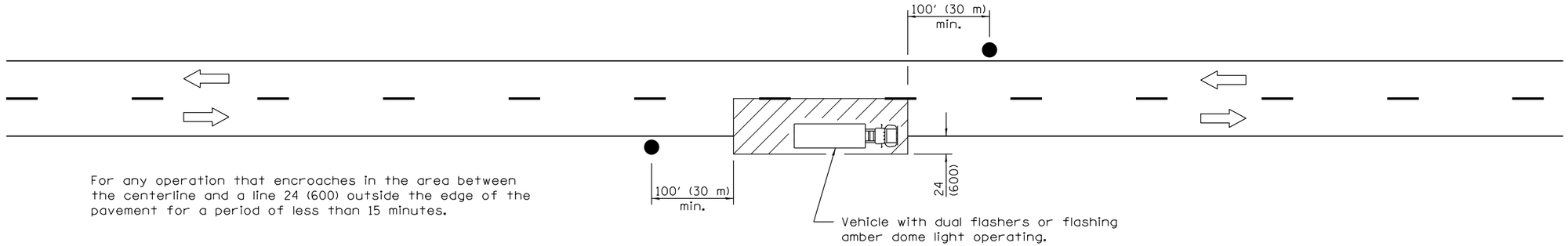

For any operation that is more than 24 (600) outside the edge of the pavement for a period of less than 60 minutes.

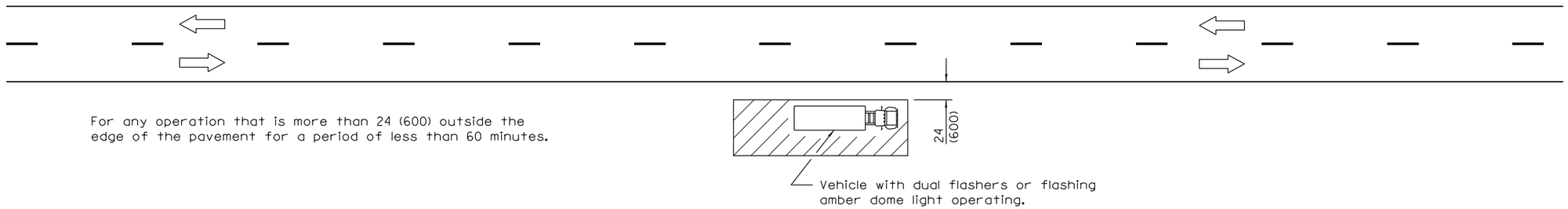

For any operation that encroaches in the area between the centerline and a line 24 (600) outside the edge of the pavement for a period in excess of 15 minutes but less than 60 minutes.

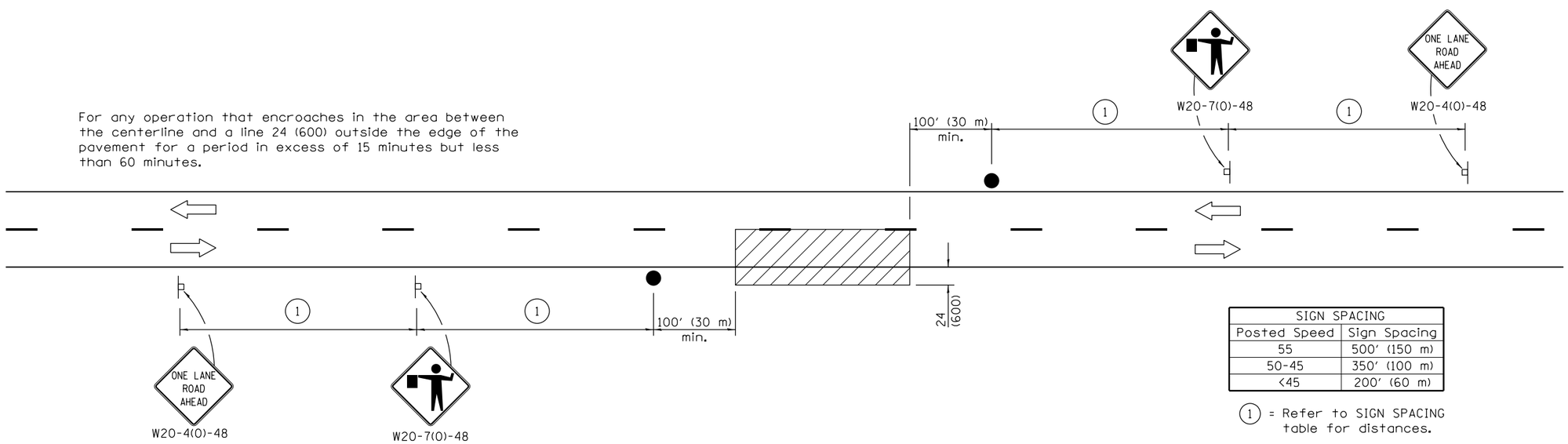

SIGN SPACING	
Posted Speed	Sign Spacing
55	500′ (150 m)
50-45	350′ (100 m)
<45	200′ (60 m)

(1) = Refer to SIGN SPACING table for distances.

All dimensions are in inches (millimeters) unless otherwise shown.

TYPICAL APPLICATIONS

Marking patches
Field survey
String line
Utility operations
Cleaning up debris on pavement

SYMBOLS

Work area

Sign on portable or permanent support

Flagger with traffic control sign

DATE	REVISIONS
1-1-11	Revised flagger sign.
1-1-09	Switched units to
	English (metric).

LANE CLOSURE, 2L, 2W, SHORT TIME OPERATIONS

STANDARD 701301–04

Illinois Department of Transportation

APPROVED January 1, 2011
ENGINEER OF SAFETY ENGINEERING

APPROVED January 1, 2011
ENGINEER OF DESIGN AND ENVIRONMENT

ISSUED 1-1-97

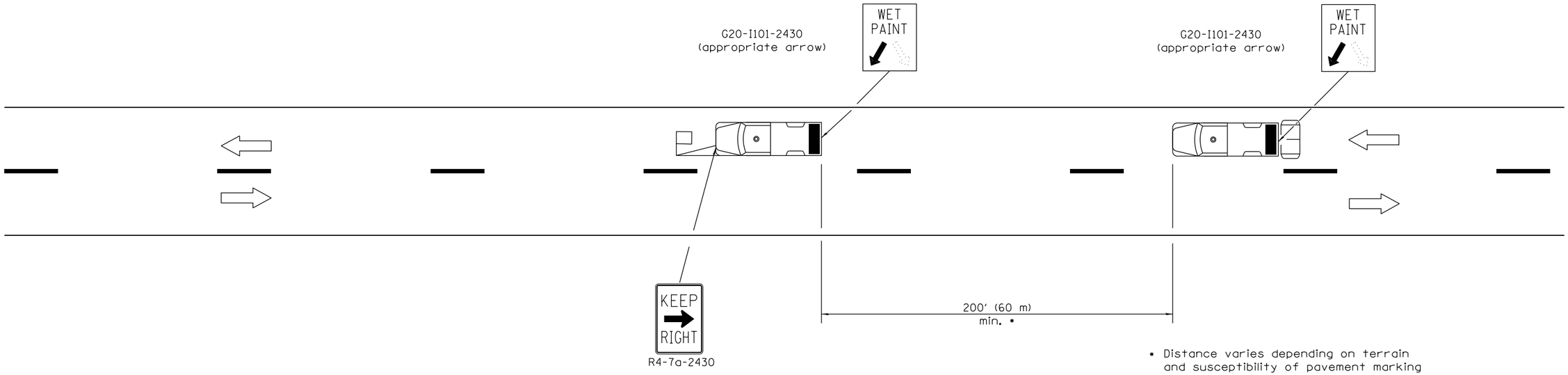

• Distance varies depending on terrain and susceptibility of pavement marking or crack sealant to wheel tracking.

TYPICAL APPLICATIONS

Landscaping work
Utility work
Pavement marking
Weed spraying
Roadometer measurements
Debris cleanup
Crack pouring

SYMBOLS

Arrow board (Hazard Mode only)

Truck with headlights, emergency flashers and flashing amber light. (visible from all directions)

18x18 (450x450) min. orange flag (use when guide wheel is used)

Truck mounted attenuator

GENERAL NOTES

This Standard is used where any vehicle, equipment, workers or their activities will require a continuous moving operation where the average speed is greater than 3 mph (5 km/h).

For shoulder operations not encroaching on the pavement, use DETAIL A, Standard 701426.

All dimensions are in inches (millimeters) unless otherwise shown.

Illinois Department of Transportation

APPROVED January 1, 2009
ENGINEER OF OPERATIONS

APPROVED January 1, 2009
ENGINEER OF DESIGN AND ENVIRONMENT

ISSUED 1-1-97

DATE	REVISIONS
1-1-09	Switched units to
	English (metric). Omitted
	Pass With Care sign.
1-1-00	Elim. speed restrictions
	in Standard title.

LANE CLOSURE 2L, 2W MOVING OPERATIONS–DAY ONLY

STANDARD 701311–03

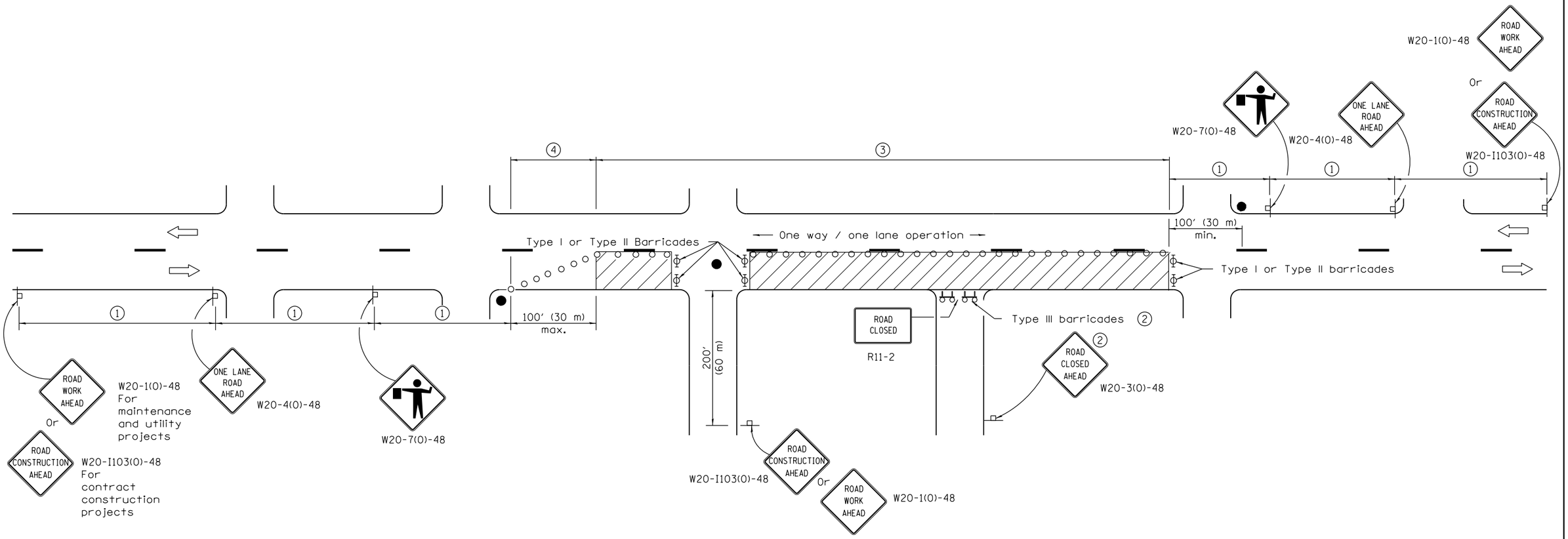

SIGN SPACING	
Posted Speed	Sign Spacing
55	500' (150 m)
50-45	350' (100 m)
<45	200' (60 m)

SYMBOLS

- Work area
- Cone, drum or barricade (not required for moving operations)
- Sign on portable or permanent support
- Flagger with traffic control sign
- Barricade or drum with flashing light
- Type III barricade with flashing lights

1. Refer to SIGN SPACING TABLE for distances.
2. For approved sideroad closures.
3. Cones at 25' (8 m) centers for 250' (75 m). Additional cones may be placed at 50' (15 m) centers. When drums or Type I or Type II barricades are used. the interval between devices may be doubled.
4. Cones, drums or barricades at 20' (6 m) centers.

GENERAL NOTES

This Standard is used where at any time, day or night, any vehicle, equipment, workers or their activities
encroach on the pavement requiring the closure of one traffic lane in an urban area.

All dimensions are in inches (millimeters) unless otherwise shown.

Illinois Department of Transportation

APPROVED January 1, 2011
ENGINEER OF SAFETY ENGINEERING
APPROVED January 1, 2011
ENGINEER OF DESIGN AND ENVIRONMENT

ISSUED 1-1-97

DATE	REVISIONS
1-1-11	Revised flagger sign.
1-1-09	Switched units to
	English (metric).
	Corrected sign No.'s.

URBAN LANE CLOSURE, 2L, 2W, UNDIVIDED

STANDARD 701501–06

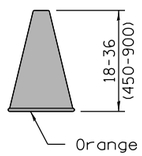

CONE

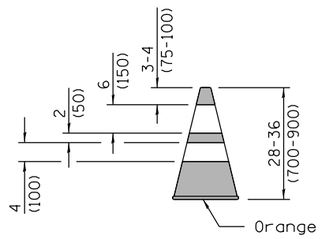

REFLECTORIZED CONE

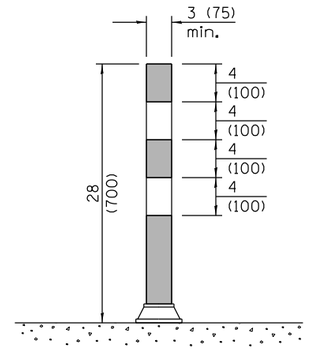

FLEXIBLE DELINEATOR

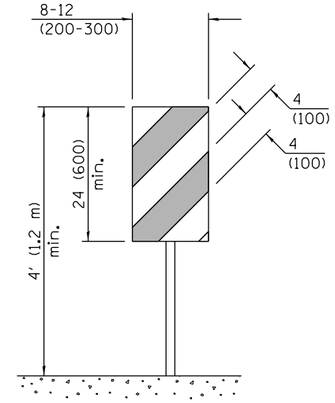

VERTICAL PANEL
POST MOUNTED

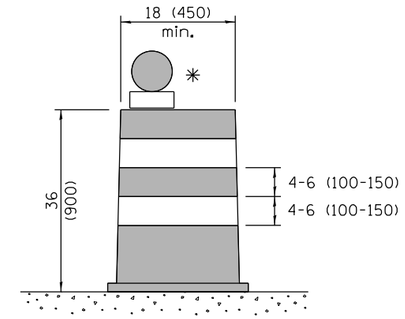

DRUM

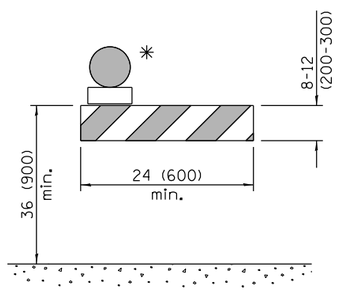

TYPE I BARRICADE

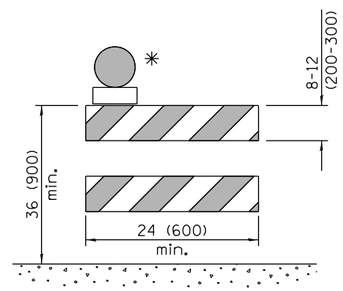

TYPE II BARRICADE

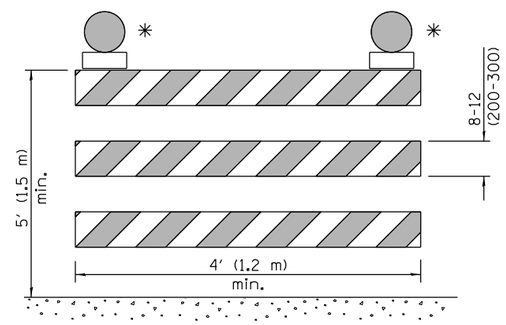

TYPE III BARRICADE

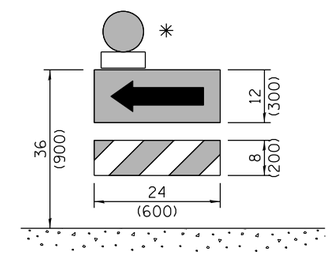

DIRECTION INDICATOR BARRICADE

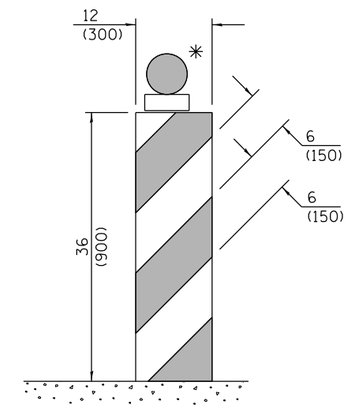

VERTICAL BARRICADE

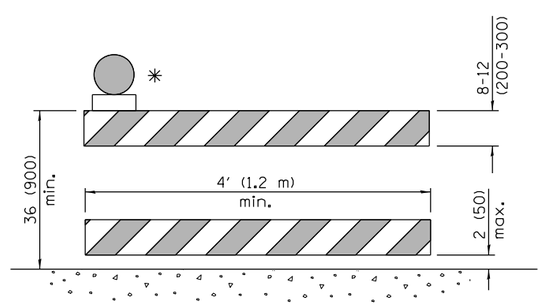

DETECTABLE PEDESTRIAN CHANNELIZING BARRICADE

✳ Warning lights (if required)

GENERAL NOTES

All heights shown shall be measured above the pavement surface.

All dimensions are in inches (millimeters) unless otherwise shown.

Illinois Department of Transportation

APPROVED January 1, 2015
ENGINEER OF OPERATIONS

APPROVED January 1, 2015
ENGINEER OF DESIGN AND ENVIRONMENT

ISSUED 1-1-97

DATE	REVISIONS
1-1-15	Revised two sign numbers on
	sheet 2. Added note reg.
	PHOTO ENFORCED plaque.
1-1-14	Modified flagger sign height.
	Added highway construction
	speed zone signs.

TRAFFIC CONTROL DEVICES

(Sheet 1 of 3)

STANDARD 701901–04

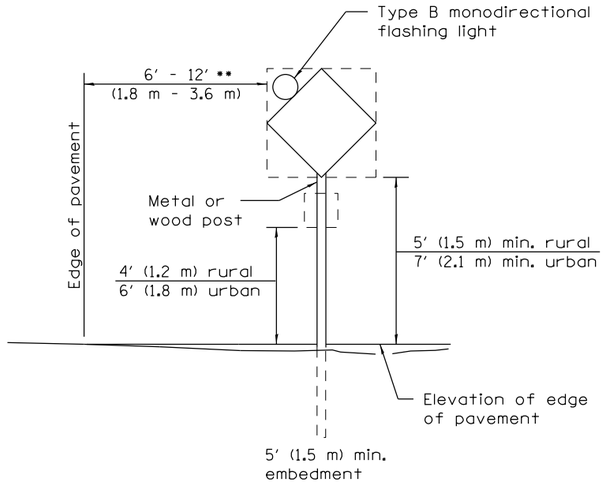

POST MOUNTED SIGNS

•• When curb or paved shoulder are present this dimension shall be 24 (600) to the face of curb or 6′ (1.8 m) to the outside edge of the paved shoulder.

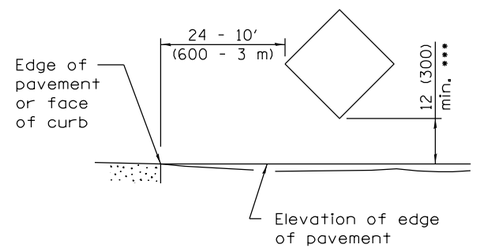

SIGNS ON TEMPORARY SUPPORTS

••• When work operations exceed four days, this dimension shall be 5′ (1.5 m) min. If located behind other devices, the height shall be sufficient to be seen completely above the devices.

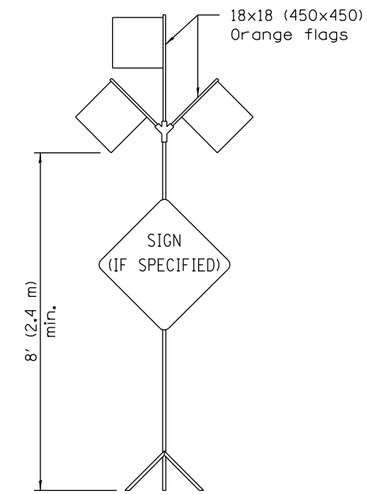

HIGH LEVEL WARNING DEVICE

G20-I104(0)-6036 G20-I105(0)-6024

This signing is required for all projects 2 miles (3200 m) or more in length.

ROAD CONSTRUCTION NEXT X MILES sign shall be placed 500′ (150 m) in advance of project limits.

END CONSTRUCTION sign shall be erected at the end of the job unless another job is within 2 miles (3200 m).

Dual sign displays shall be utilized on multi-lane highways.

WORK LIMIT SIGNING

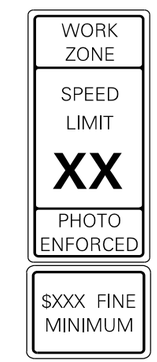

W21-I115(0)-3618

R2-1-3648

R10-I108p-3618 ••••

R2-I106p-3618

Sign assembly as shown on Standards or as allowed by District Operations.

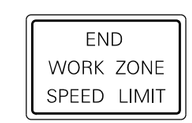

G20-I103(0)-6036

This sign shall be used when the above sign assembly is used.

HIGHWAY CONSTRUCTION SPEED ZONE SIGNS

•••• R10-I108p shall only be used along roadways under the juristiction of the State.

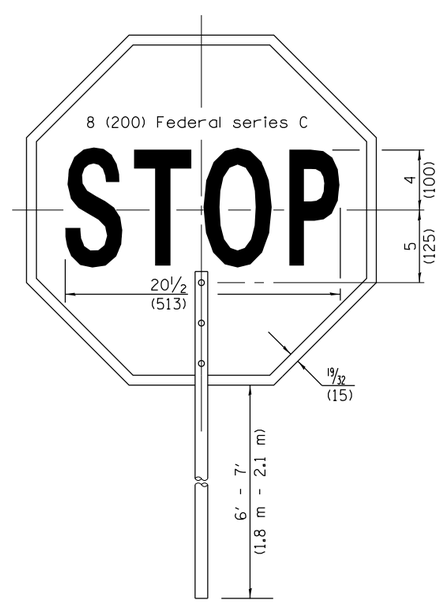

FRONT SIDE

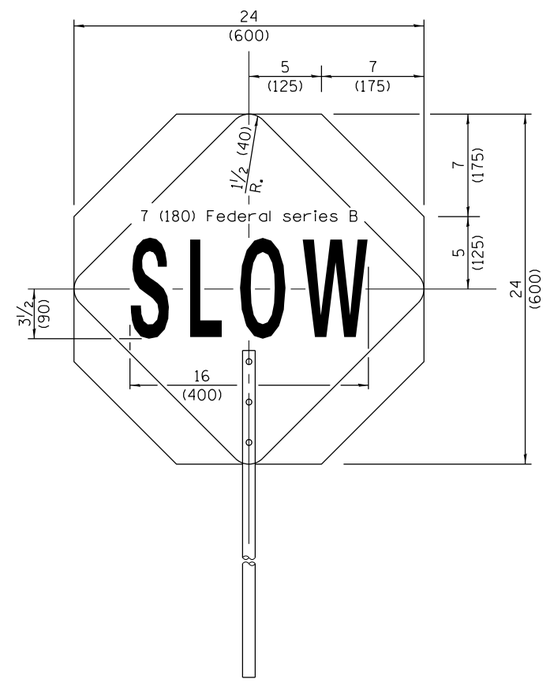

REVERSE SIDE

FLAGGER TRAFFIC CONTROL SIGN

Illinois Department of Transportation

APPROVED January 1, 2015
ENGINEER OF OPERATIONS

APPROVED January 1, 2015
ENGINEER OF DESIGN AND ENVIRONMENT

ISSUED 1-1-97

TRAFFIC CONTROL DEVICES

(Sheet 2 of 3)

STANDARD 701901–04

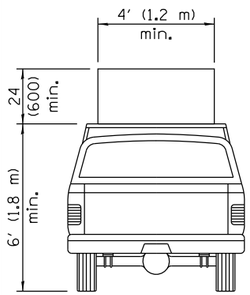

TYPE A
ROOF
MOUNTED

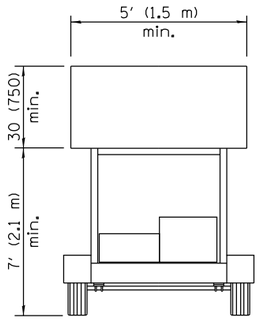

TYPE B
ROOF OR TRAILER
MOUNTED

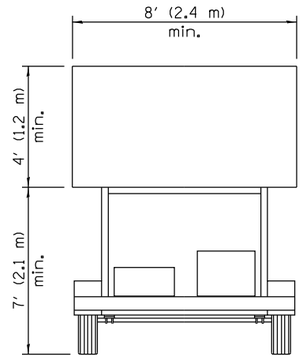

TYPE C
TRAILER
MOUNTED

ARROW BOARDS

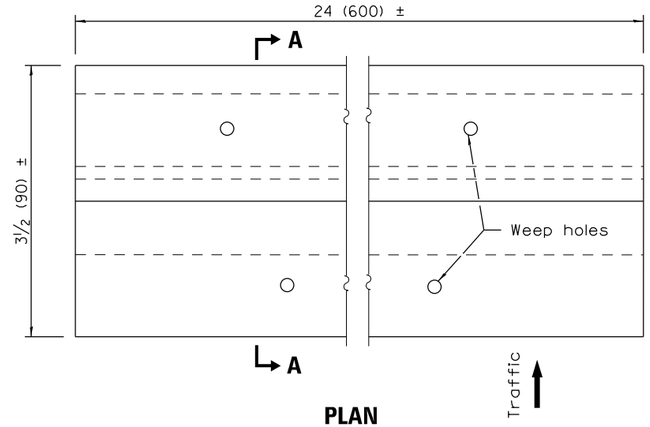

PLAN

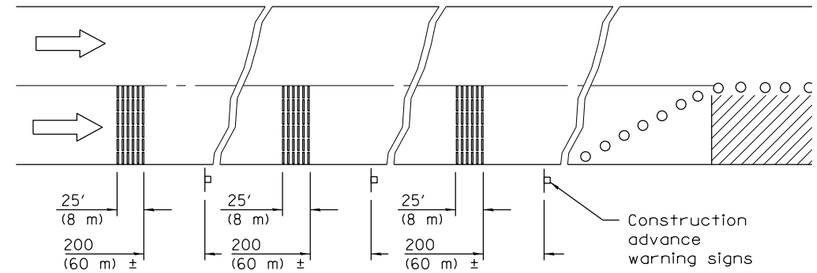

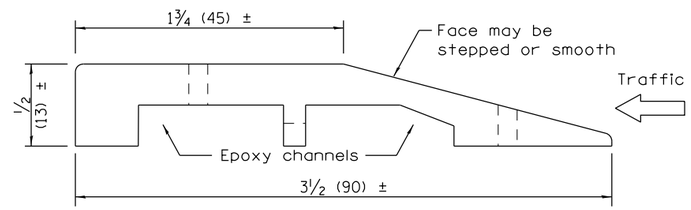

SECTION A–A

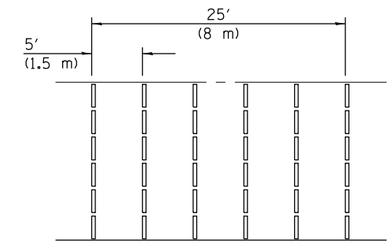

TYPICAL INSTALLATION

TEMPORARY RUMBLE STRIPS

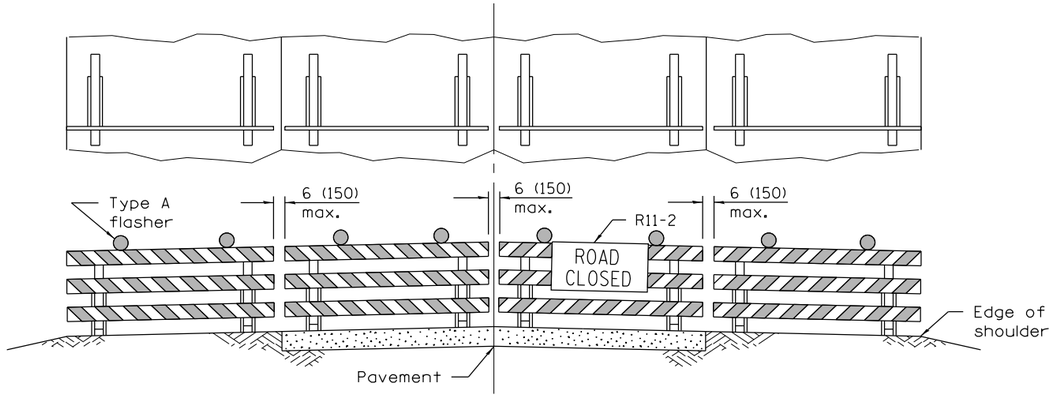

ROAD CLOSED TO ALL TRAFFIC

Reflectorized striping may be omitted on the back side of the barricades. If a Type III barricade with an attached sign panel which meets NCHRP 350 is not available, the sign may be mounted on an NCHRP 350 temporary sign support directly in front of the barricade.

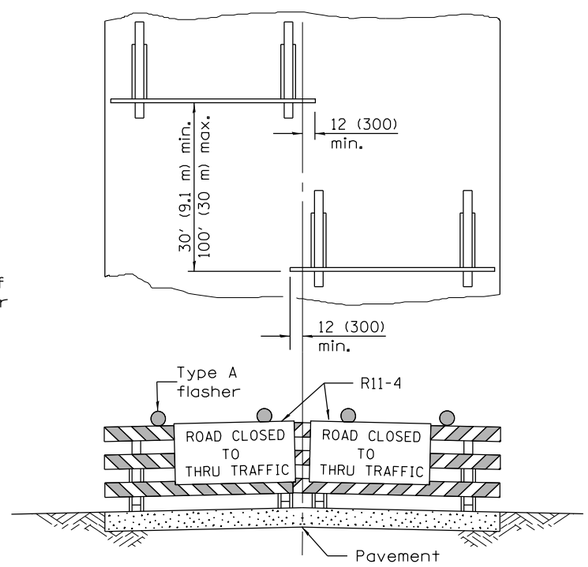

ROAD CLOSED TO THRU TRAFFIC

Reflectorized striping shall appear on both sides of the barricades. If a Type III barricade with an attached sign panel which meets NCHRP 350 is not available, the signs may be mounted on NCHRP 350 temporary sign supports directly in front of the barricade.

TYPICAL APPLICATIONS OF
TYPE III BARRICADES CLOSING A ROAD

Illinois Department of Transportation

APPROVED January 1, 2015
ENGINEER OF OPERATIONS
APPROVED January 1, 2015
ENGINEER OF DESIGN AND ENVIRONMENT

ISSUED 1-1-97

TRAFFIC CONTROL DEVICES

(Sheet 3 of 3)

STANDARD 701901–04

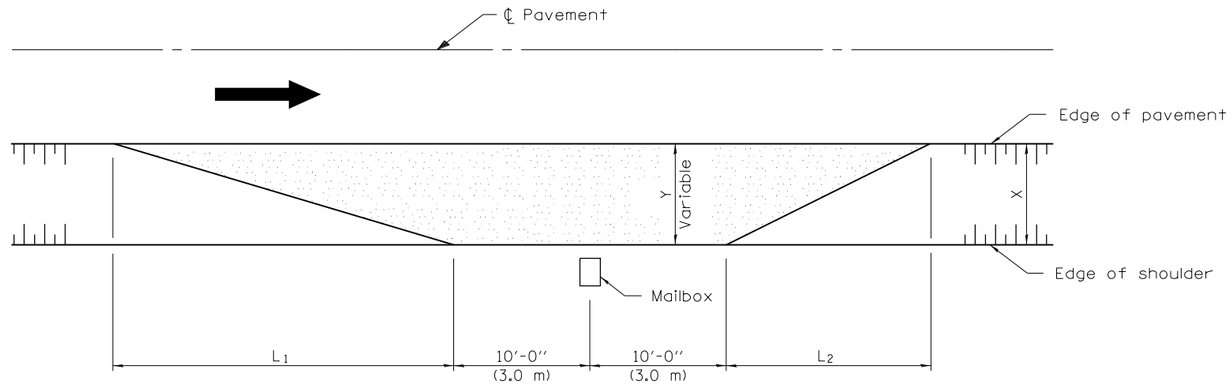

TYPICAL APPLICATION

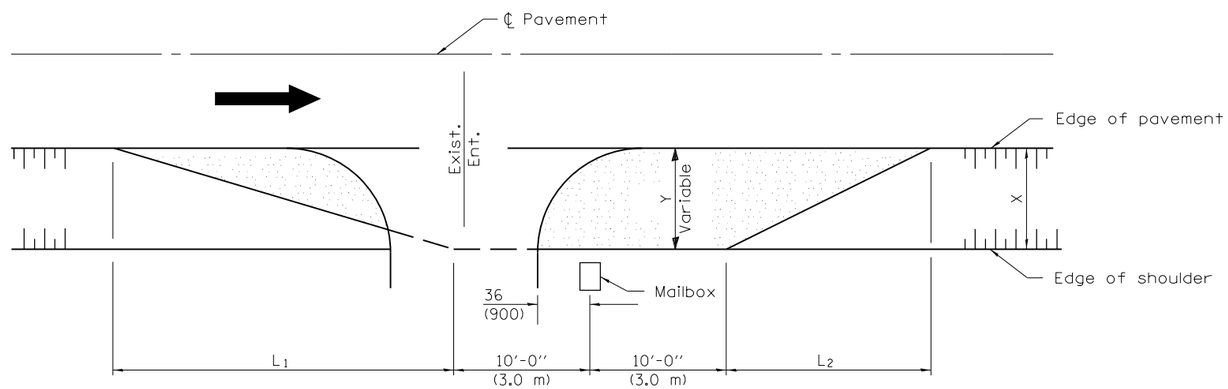

MAILBOX ON FARSIDE OF ENTRANCE

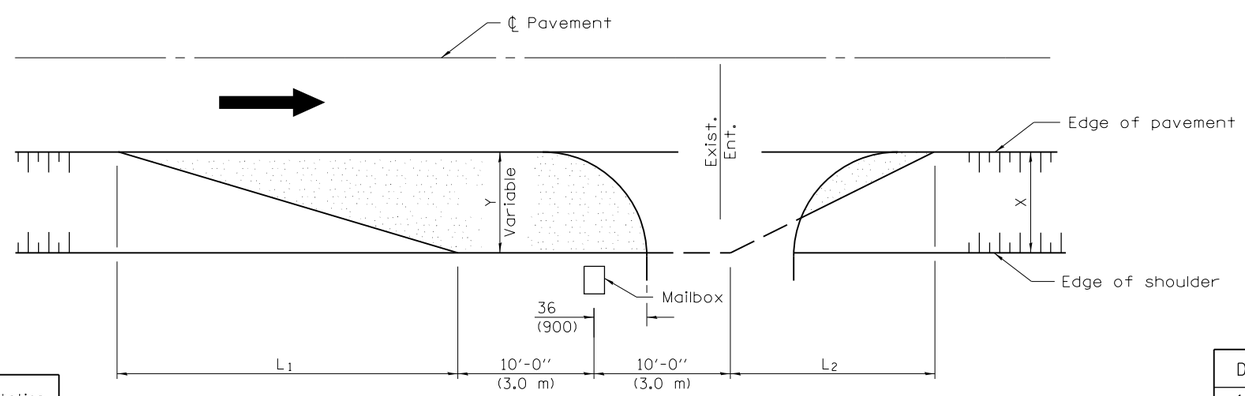

MAILBOX ON NEARSIDE OF ENTRANCE

DIMENSIONS - ft. (m)						
Width of Shoulder (X)	12 (3.6)	10 (3.0)	8 (2.4)	6 (1.8)	5 (1.5)	4 (1.2)
Width of Turnout (Y)	8 (2.4)	8 (2.4)	6 (1.8)	4 (1.2)	4 (1.2)	4 (1.2)
L_1	30 (9.0)	30 (9.0)	23 (6.9)	15 (4.5)	15 (4.5)	15 (4.5)
L_2	20 (6.0)	20 (6.0)	15 (4.5)	10 (3.0)	10 (3.0)	10 (3.0)

Note:
Dimensions for Township and District Roads may vary from the above dimensions.

GENERAL NOTES

Mailboxes shall be mounted such that the face of the mailbox is 6 (150) to 12 (300) and the post a minimum of 24 (600) from the edge of the turnout surfacing.

All dimensions are in inches (millimeters) unless otherwise shown.

Illinois Department of Transportation

APPROVED January 1, 2009
ENGINEER OF LOCAL ROADS AND STREETS
APPROVED January 1, 2009
ENGINEER OF DESIGN AND ENVIRONMENT

ISSUED 1-1-97

DATE	REVISIONS
1-1-09	Switched units to
	English (metric).
1-1-99	Add width of shoulder X.

MAILBOX TURNOUT FOR LOCAL ROADS

STANDARD B.L.R. 24–2