STATE OF ILLINOIS
COUNTY OF LAKE
PLANS FOR PROPOSED
ROLLINS ROAD
MICROSURFACING
SECTION 16-00080-61-RS

INDEX OF SHEETS

SHEET No.	DESCRIPTION
1	COVER SHEET
2 - 3	GENERAL NOTES
4	SUMMARY OF QUANTITES
5 - 7	TYPICAL SECTIONS
8 - 11	SCHEDULE OF QUANTITES
12 - 18	REMOVAL PLAN
19 - 34	PLAN SHEETS
35 - 42	TRAFFIC CONTROL PLAN
43 - 48	LCDOT STANDARDS & DETAILS
49 - 66	IDOT HIGHWAY STANDARDS

PROJECT LOCATION

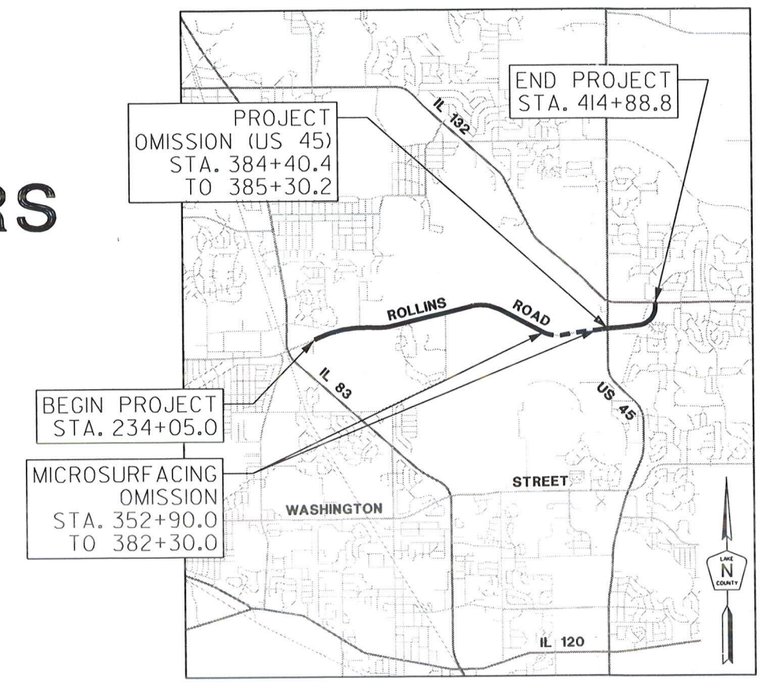

ROAD	STATION	STATION	LENGTH (FT.)	LENGTH (MI.)
ROLLINS ROAD	234+05.0	414+88.8	18,083.8	3.43
MICROSURFACING OMISSION	352+90.0	382+30.0	(2,940.0)	(0.56)
PROJECT OMISSION (US 45)	384+40.4	385+30.2	(89.8)	(0.02)
NET LENGTH OF IMPROVEMENT (OVERALL PROJECT)			17,994.0	3.41
NET LENGTH OF IMPROVEMENT (MICROSURFACING)			15,054.0	2.85

HOT-MIX ASPHALT MIXTURE REQUIREMENTS

MIXTURE TYPE	AC TYPE	AIR VOIDS
HOT-MIX ASPHALT SURFACE COURSE, MIX "D", N70	PG 64-22	4% = 70 GYRATION

THE UNIT WEIGHT USED TO CALCULATE ALL HMA SURFACE MIXTURE QUANTITIES IS 112 LBS/SQ YD/IN.

FOR USE OF RECYCLED MATERIALS SEE SPECIAL PROVISIONS.

IDOT HIGHWAY STANDARDS

000001-06 (8 SHEETS)
701421-07
701426-08
701427-04
701602-07 (4 SHEETS)
701901-05 (3 SHEETS)

LCDOT STANDARDS & DETAILS

LC7003
LC7004
LC7200
LC7800 (2 SHEETS)
LC7802
LC7805

FOR UNDERGROUND UTILITY

LOCATIONS, CALL

J. U. L. I. E.

TOLL FREE

800-892-0123

LICENSED PROFESSIONAL ENGINEER
BENJAMIN A. RUSSO
062.065191
STATE OF ILLINOIS

BUILDING LAKE COUNTY'S EFFECTIVE TRANSPORTATION SYSTEM TODAY

Plans Prepared By: LakeCounty Division of Transportation

Signature: Benjamin A. Russo
Date: 9/19/16
Illinois License No: 062-065191
Expiration Date: 11/30/17
Field: CIVIL
Approved By: Paul A. Trigg, County Engineer
Date: Sept 20, 2016

MICROSURFACING 2016 - ROLLINS ROAD | 16-00080-61-RS

REVISIONS / REMARKS					
NO.	DESCRIPTION	DATE	BY	SURVEYOR:	/
		/ /		DSGNR/LIAISON:	/
		/ /		PLOTTED BY:	khdl8691 8/23/2016

MICROSURFACING 2016
ROLLINS ROAD (HOOK DRIVE TO IL 132)

LakeCounty Division of Transportation

COVER SHEET

ROUTE	SECTION	SECTION NUMBER	SHEET	SHEETS
CH31	80	16-00080-61-RS	1	66

FILE NAME: U:\Design\Russo\16-00080-61-RS Microsurfacing 2016\CAD\16-00080-61-RS.dgn

LCDOT GENERAL NOTES
(Revised 5/1/16)

1. GENERAL

   a. All construction shall be done according to the State of Illinois "Standard Specifications for Road and Bridge Construction" adopted April 1, 2016; the "Supplemental Specifications and Recurring Special Provisions, adopted April 1, 2016; the latest edition of the “Illinois Manual on Uniform Traffic Control devices for Streets and Highways”; the details in these plans, and the Special Provisions included in the contract documents.

   b. The Contractor shall notify the Engineer at least 72 hours prior to beginning work and shall coordinate all construction operations with the Engineer.

   c. The Contractor shall coordinate his/her work with any adjacent projects that are or may be under construction.

   d. The Contractor shall verify all dimensions and existing conditions in the field prior to ordering materials and beginning construction. Where new work is proposed to meet existing features, it shall be the Contractor's responsibility to field check all dimensions and elevations and notify the Engineer of discrepancies before proceeding with construction.

   e. The Contractor shall provide access to abutting properties at all times during construction, except for brief periods of interruption. The Contractor shall notify the property owner no less than 24 hours in advance of the interruption of access and/or services. The notification will include the time and duration of the interruption. The cost to provide access shall be paid for and included in the cost of TRAFFIC CONTROL AND PROTECTION (SPECIAL)

2. SURVEY

   a. All elevations shown on these plans are based upon the North American Vertical Datum of 1988 (NAVD 88). The elevations shown on the plans are for finished grades unless otherwise noted.

   b. Where section or subsection monuments are encountered, the Engineer shall be notified before the monuments are removed. The Contractor shall carefully preserve all property marks and monuments until the owner, authorized surveyor or agent has witnessed or otherwise referenced their location.

3. REMOVAL

   a. The Contractor shall saw cut the existing pavement, concrete curb & gutter, median, hot-mix asphalt shoulder; sidewalk; and/or other appurtenances as shown on the plans, to separate the existing material to be removed, by means of an approved concrete saw to a depth shown on the plans or as directed by the Engineer. This work shall be included in the cost of the item being removed.

   The Contractor shall be required to saw vertical cuts so as to form clean vertical joints. Should the Contractor deface any edge, a new sawed joint shall be provided and any additional work, including removal and replacement, shall be done at the Contractor’s expense.

   b. All excess material shall be disposed of offsite on the day it is excavated or removed.

   c. The Contractor is prohibited from burning any material within or adjacent to the project limits. All excess or waste material shall be hauled away from the project site by the contractor and legally disposed of outside the right-of-way. No extra compensation will be allowed the contractor for any expense incurred by complying with the requirements of this note.

4. DRAINAGE

   a. Unless otherwise noted on the plans, the existing drainage facilities shall remain in use during the period of construction. During construction operations the Contractor shall ensure positive site drainage at the conclusion of each day. Site drainage may be achieved by ditching, pumping, or any other method acceptable to the Engineer.

   b. During the construction operation when any loose material is deposited in the flow line of ditches, gutters or drainage structures so the natural flow of water is obstructed, the material shall be removed at the close of each working day.

   At the conclusion of the construction operations all drainage structures shall be free from all dirt and debris. This work will not be paid for separately but shall be considered included in the unit costs of MICROSURFACING, TWO PASSES.

5. LANDSCAPING: Phosphorus Fertilizer Nutrient **shall not** be used on Lake County Highways.

6. MILLED PAVEMENT: When milled pavement is open to traffic, the maximum elevation difference between lanes, at concrete curb and gutter, or existing ground (shoulders, entrances etc…) shall not exceed 1.5 inches. With written approval from the Engineer the maximum elevation difference may be up to 3 inches if the edge of the milling is sloped a minimum 3:1 (H:V).

7. UTILITIES

a. Location information for underground utility facilities shown on the plans and/or included in the Contract Specifications represents the best information provided to LCDOT, and is only included for the convenience of the Contractor. LCDOT assumes no responsibility for the sufficiency or the accuracy of the location information provided.

b. Before starting any excavation, the Contractor shall contact "JULIE" at 1-800-892-0123 for field locations of buried electric, telephone, gas, water, sewer, cable, etc.., utility lines (minimum 48 hours notification is required).

c. The Contractor shall be responsible for any damage or destruction of public or private property according to the special provisions and Article 107.20 of the "Standard Specifications". The Contractor shall restore such property at his/her own expense. The Contractor shall use all necessary precautions and protective measures required to maintain existing utilities, sewers, and appurtenances that must be kept in operation. In particular, the Contractor will take adequate measures to prevent the undermining of utilities and sewers which are still in service.

8. MISCELLANEOUS

a. The Contractor shall provide temporary toilet facilities for the use of all the Contractors' personnel employed on the work site, and shall maintain same in proper sanitary condition. The temporary facilities shall include hand sanitizing stations. At the completion of the project, the facilities shall be removed and the premises left clean. The Engineer shall approve the location of the temporary toilets. The cost of this work shall be included in the unit bid prices and no additional compensation will be allowed.

b. The Contractor shall not cross completed surface course, or existing pavement not scheduled to be removed, with construction equipment which may damage the pavement.

c. The Contractor's attention is called to the fact that some quantities are given in both summary form and on the plan sheets. Care should be taken to avoid duplication of quantities.

SUMMARY OF QUANTITIES AND INDEX OF SCHEDULES

PAY ITEM NO.	SPECIAL*	CONT**	SP***	CODED PAY ITEM NO.	DESCRIPTION	UNIT	QUANTITY	SCHEDULE NO.	SHEET NO.
1	X			40603340	HOT-MIX ASPHALT SURFACE COURSE, MIX "D", N70	TON	579.0	1	8
2	X			40800029	BITUMINOUS MATERIALS (TACK COAT)	POUND	3,099.0	1	8
3				67100100	MOBILIZATION	L SUM	1.0	---	---
4				70300100	SHORT-TERM PAVEMENT MARKING	FOOT	43,816.0	2	8
5				70300150	SHORT TERM PAVEMENT MARKING REMOVAL	SQ FT	19,763.0	2	8
6	X			70300210	TEMPORARY PAVEMENT MARKING - LETTERS AND SYMBOLS	SQ FT	1,019.2	3A	8
7	X			70300220	TEMPORARY PAVEMENT MARKING - LINE 4"	FOOT	73,310.0	3B	9
8	X			70300230	TEMPORARY PAVEMENT MARKING - LINE 5"	FOOT	35,204.0	3C	9
9	X			70300240	TEMPORARY PAVEMENT MARKING - LINE 6"	FOOT	3,482.0	3D	9
10	X			70300250	TEMPORARY PAVEMENT MARKING - LINE 8"	FOOT	1,497.0	3E	9
11	X			70300260	TEMPORARY PAVEMENT MARKING - LINE 12"	FOOT	5,055.0	3F	9
12	X			70300280	TEMPORARY PAVEMENT MARKING - LINE 24"	FOOT	303.0	3G	9
13				70300520	PAVEMENT MARKING TAPE, TYPE III 4"	FOOT	16,070.0	2	8
14	X			78001120	PAINT PAVEMENT MARKING - LINE 5"	FOOT	32,287.0	4	9
15	X		X	78300200	RAISED REFLECTIVE PAVEMENT MARKER REMOVAL	EACH	782.0	1	8
16	X		X	LC400202	SEAL COAT	SQ YD	14,942.0	6	9
17			X	LC400205	MICRO-SURFACING, TWO PASSES	SQ YD	109,855.0	7	10
18	X		X	LC600200	INSTALL SURVEY MONUMENTS	EACH	10.0	11	8
19	X		X	LC780020	GROOVED THERMOPLASTIC PAVEMENT MARKINGS - LETTERS AND SYMBOLS	SQ FT	1,019.2	8A	11
20	X		X	LC780021	GROOVED THERMOPLASTIC PAVEMENT MARKINGS - LINE 4"	FOOT	73,310.0	8B	11
21	X		X	LC780022	GROOVED THERMOPLASTIC PAVEMENT MARKINGS - LINE 5"	FOOT	2,917.0	8C	11
22	X		X	LC780023	GROOVED THERMOPLASTIC PAVEMENT MARKINGS - LINE 6"	FOOT	3,482.0	8D	11
23	X		X	LC780024	GROOVED THERMOPLASTIC PAVEMENT MARKING - LINE 8"	FOOT	1,497.0	8E	11
24	X		X	LC780025	GROOVED THERMOPLASTIC PAVEMENT MARKINGS - LINE 12"	FOOT	5,055.0	8F	11
25	X		X	LC780026	GROOVED THERMOPLASTIC PAVEMENT MARKINGS - LINE 24"	FOOT	303.0	8G	11
26		X	X	LR400300	BLOTTER AGGREGATE	TON	50.0	10	8
27		X	X	X0326220	MICRO-SURFACING RUT FILLING	FOOT	1,000.0	10	8
28	X		X	X0327980	PAVEMENT MARKING REMOVAL - WATER BLASTING	SQ FT	28,288.0	5	10
29		X	X	X3200001	BUMP REMOVAL	EACH	50.0	10	8
30	X		X	X4400196	HOT-MIX ASPHALT SURFACE REMOVAL, SPECIAL	SQ YD	6,887.0	1	8
31			X	X7010216	TRAFFIC CONTROL AND PROTECTION (SPECIAL)	L SUM	1.0	---	---
32	X		X	X7810300	RECESSED REFLECTIVE PAVEMENT MARKER	EACH	758.0	9	11
33		X	X	Z0004005	FIBER ASPHALT	POUND	20,873.0	7	10

LEGEND	
SPECIAL*	Specialty Pay Item
CONT**	Contingency/Estimated Quantity
SP***	Covered by a Special Provision in the Contract Specifications

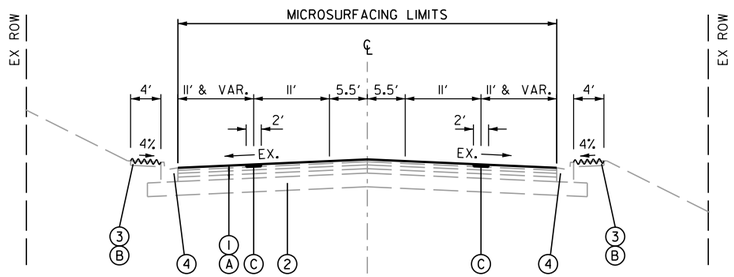

ROLLINS ROAD

STA. 234+05.0 TO 263+95.9

STA. 275+67.6 TO 308+50

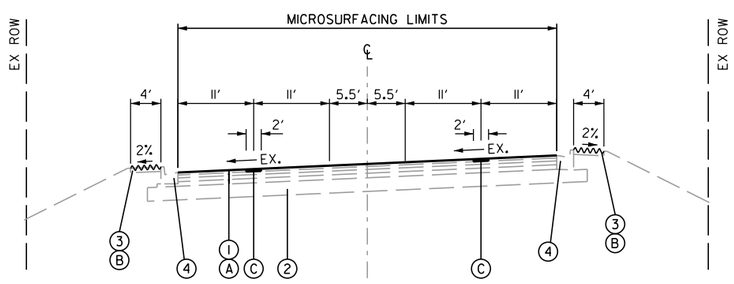

ROLLINS ROAD

STA. 263+95.9 TO 275+67.6

EXISTING PAVEMENT

(FROM RECORDS)

(1) 11" HMA PAVEMENT

SURFACE COURSE: 1½"
BINDER COURSES: 9½"

(2) 12" AGGREGATE SUBGRADE

(3) 6" HMA MAINTENANCE SHOULDER

SURFACE COURSE: 1½"
BASE COURSE: 4½"

(4) COMB. CONC. C&G, TYPE B-6.24

PROPOSED IMPROVEMENTS

(A) MICRO-SURFACING, TWO PASSES

(B) SEAL COAT

(C) LONGITUDINAL LANE LINE PATCHING

HMA SURFACE REMOVAL, SPECIAL - 1½" DEPTH
BITUMINOUS MATERIALS (TACK COAT)
HOT-MIX ASPHALT SURFACE COURSE, MIX "D", N70

REVISIONS / REMARKS					
NO.	DESCRIPTION	DATE	BY	SURVEYOR:	___/___
		__/__/__		DSGNR/LIAISON:	
		__/__/__		PLOTTED BY:	xhdl869l 8/23/2016

MICROSURFACING 2016
ROLLINS ROAD (HOOK DRIVE TO IL 132)

LakeCounty
Division of Transportation

TYPICAL SECTIONS
STA. 234+05.0 TO 308+50.0

ROUTE	SECTION	SECTION NUMBER	SHEET	SHEETS
CH31	80	16-00080-61-RS	5	66

FILE NAME: U:\Design\Russo\16-00080-61-RS Microsurfacing 2016\CAD\16-00080-61-RS.dgn

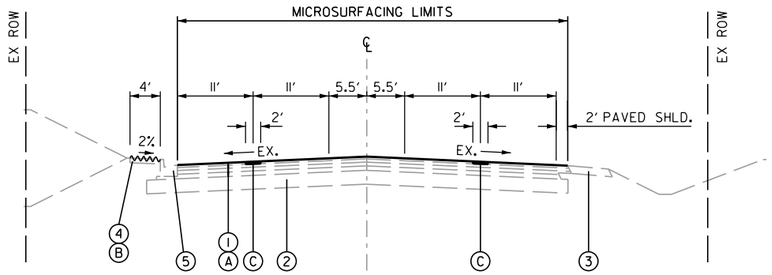

ROLLINS ROAD

STA. 308+50.0 TO 310+81.8
STA. 340+59.0 TO 340+86.3
STA. 340+86.3 TO 342+46.7 |3
STA. 342+46.7 TO 343+51.0 |5
STA. 343+51.0 TO 346+36.0 |1
STA. 346+36.0 TO 346+46.0 |5
STA. 346+46.0 TO 347+48.2 |3
STA. 347+48.2 TO 350+15.7

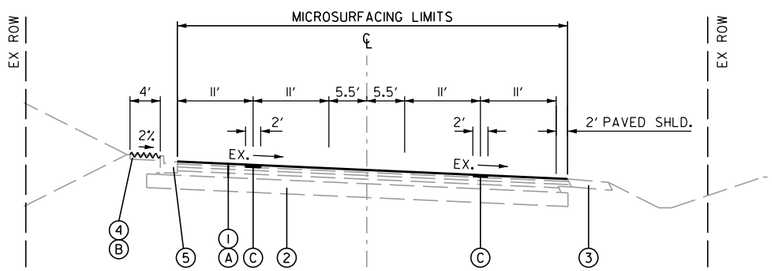

ROLLINS ROAD

STA. 310+59.0 TO 315+98.0
STA. 315+98.0 TO 317+97.7 |3
STA. 317+97.7 TO 318+31.4 |5
STA. 318+31.4 TO 319+46.6 |1 |6
STA. 319+46.6 TO 321+10.0 |1 |2
STA. 321+10.0 TO 321+19.7 |2 |5
STA. 321+19.7 TO 321+37.2 |5 |6
STA. 321+37.2 TO 323+58.7 |3 |6
STA. 323+58.7 TO 324+26.3 |3
STA. 324+26.3 TO 326+50.0 |5

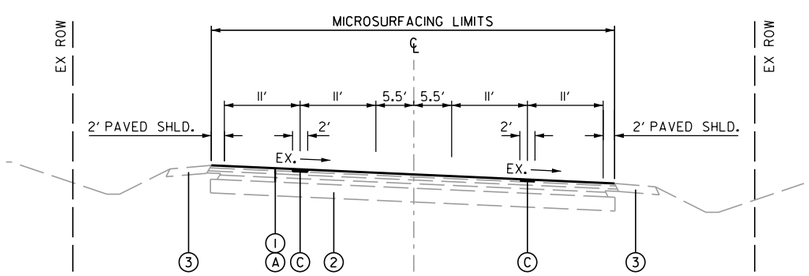

ROLLINS ROAD

STA. 326+50.0 TO 327+22.9 |3
STA. 327+22.9 TO 330+91.6
STA. 330+91.6 TO 331+22.5 |3

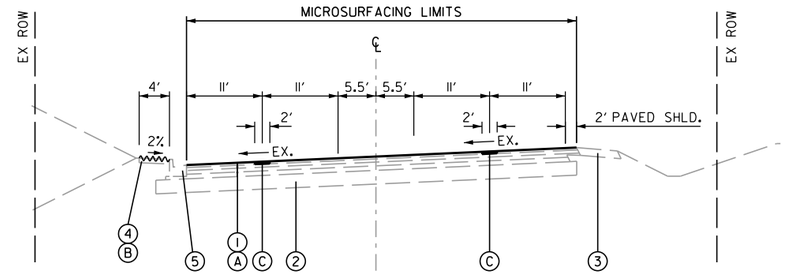

ROLLINS ROAD

STA. 350+15.7 TO 352+90.0

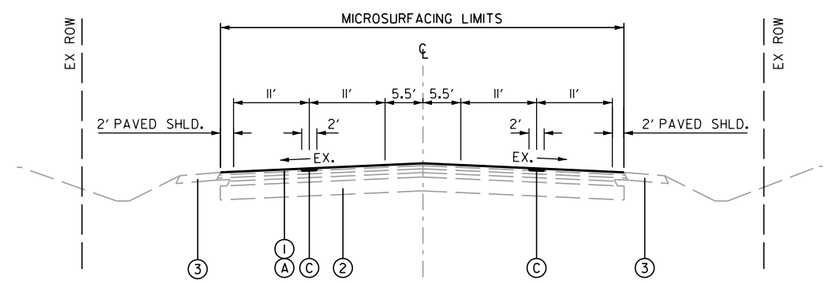

ROLLINS ROAD

STA. 331+22.5 TO 332+27.4 |3
STA. 332+27.4 TO 332+79.0 |3 |4
STA. 332+79.0 TO 333+38.0 |1 |4
STA. 333+38.0 TO 334+48.0 |1 |2
STA. 334+48.0 TO 334+84.6 |1 |6
STA. 334+84.6 TO 336+55.9 |1 |4
STA. 336+55.9 TO 337+06.5 |1
STA. 337+06.5 TO 337+34.1 |5
STA. 337+34.1 TO 338+17.5 |3
STA. 338+17.5 TO 340+59.0

EXISTING PAVEMENT

(FROM RECORDS)

1. 11" HMA PAVEMENT
   SURFACE COURSE: 1½"
   BINDER COURSES: 9½"
2. 12" AGGREGATE SUBGRADE
3. 6" AGGREGATE SHOULDER
4. 6" HMA MAINTENANCE SHOULDER
   SURFACE COURSE: 1½"
   BASE COURSE: 4½"
5. COMB. CONC. C&G, TYPE B-6.24
6. COMB. CONC. C&G, TYPE M-2.24
7. CONCRETE BARRIER / RETAINING WALL

PROPOSED IMPROVEMENTS

A. MICRO-SURFACING, TWO PASSES
B. SEAL COAT
C. LONGITUDINAL LANE LINE PATCHING
   HMA SURFACE REMOVAL, SPECIAL - 1½" DEPTH
   BITUMINOUS MATERIALS (TACK COAT)
   HOT-MIX ASPHALT SURFACE COURSE, MIX "D", N70

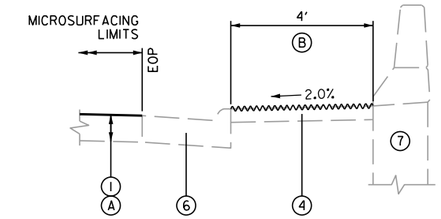

|1 **RETAINING WALL (RT)**

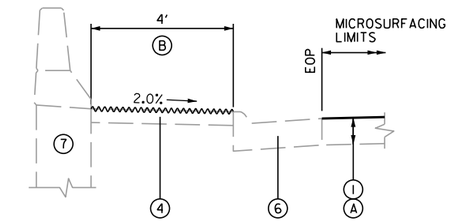

|2 **RETAINING WALL (LT)**

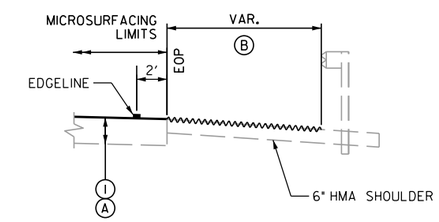

|3 **GUARDRAIL (RT)**

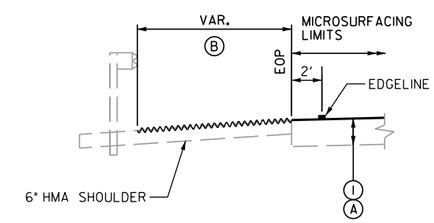

|4 **GUARDRAIL (LT)**

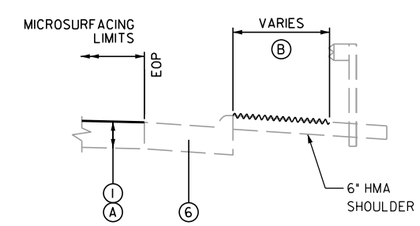

|5 **CURB/GUARDRAIL (RT)**

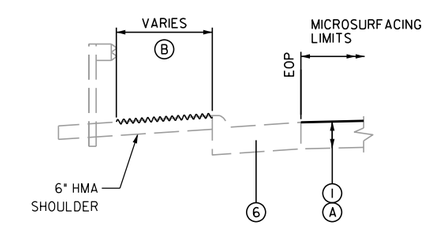

|6 **CURB/GUARDRAIL (LT)**

REVISIONS / REMARKS					
NO.	DESCRIPTION	DATE	BY	SURVEYOR:	___/___
		___/___/___		DSGNR/LIAISON:	
		___/___/___		PLOTTED BY:	khd18691 8/23/2016

MICROSURFACING 2016
ROLLINS ROAD (HOOK DRIVE TO IL 132)

LakeCounty Division of Transportation

TYPICAL SECTIONS
STA. 308+50.0 TO 352+90.0

ROUTE	SECTION	SECTION NUMBER	SHEET	SHEETS
CH31	80	16-00080-61-RS	6	66

FILE NAME: U:\Design\Russo\16-00080-61-RS Microsurfacing 2016\CAD\16-00080-61-RS.dgn

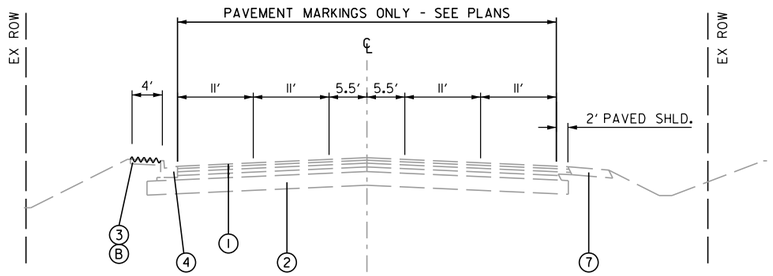

ROLLINS ROAD

STA. 352+90.0 TO 367+29.0
(MICROSURFACING OMISSION)

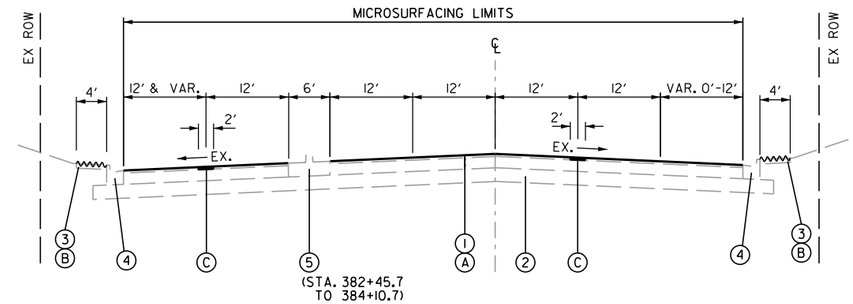

ROLLINS ROAD

STA. 382+30.0 TO 384+40.4

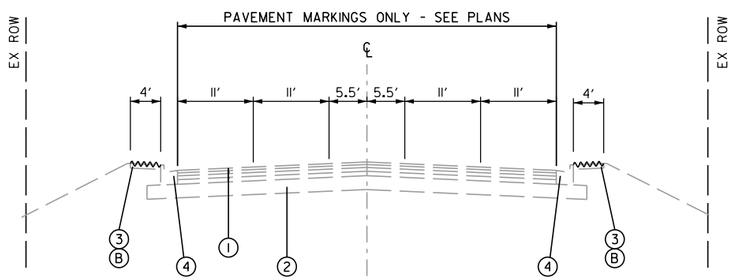

ROLLINS ROAD

STA. 367+29.0 TO 382+30.0
(MICROSURFACING OMISSION)

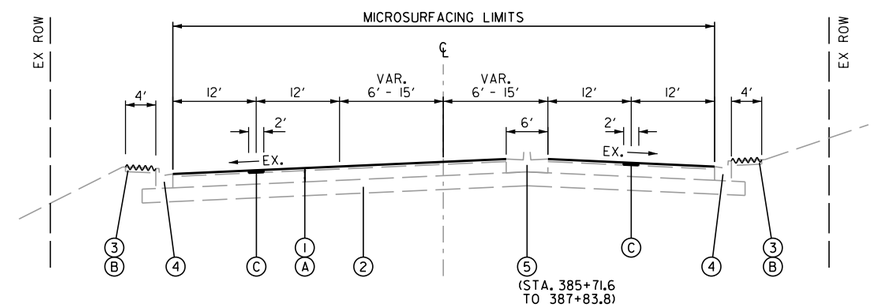

ROLLINS ROAD

STA. 385+30.2 TO 395+48.8

EXISTING PAVEMENT

(FROM RECORDS)

1. 11" HMA PAVEMENT
   SURFACE COURSE: 1½"
   BINDER COURSES: 9½"
2. 12" AGGREGATE SUBGRADE
3. 6" HMA MAINTENANCE SHOULDER
   SURFACE COURSE: 1½"
   BASE COURSE: 4½"
4. COMB. CONC. C&G, TYPE B-6.24
5. CONCRETE MEDIAN, TYPE SB-6.12
6. CONCRETE SIDEWALK
7. 6" AGGREGATE SHOULDER

PROPOSED IMPROVEMENTS

A. MICRO-SURFACING, TWO PASSES
B. SEAL COAT
C. LONGITUDINAL LANE LINE PATCHING
   HMA SURFACE REMOVAL, SPECIAL - 1½" DEPTH
   BITUMINOUS MATERIALS (TACK COAT)
   HOT-MIX ASPHALT SURFACE COURSE, MIX "D", N70

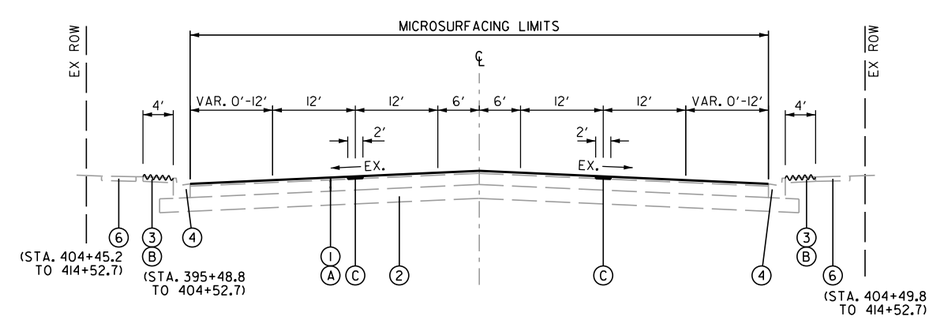

ROLLINS ROAD

STA. 395+48.8 TO 414+88.8

REVISIONS / REMARKS					
NO.	DESCRIPTION	DATE	BY	SURVEYOR:	___/___
		___/___/___		DSGNR/LIAISON:	
		___/___/___		PLOTTED BY:	xhdl8691 8/24/2016

MICROSURFACING 2016
ROLLINS ROAD (HOOK DRIVE TO IL 132)

LakeCounty
Division of Transportation

TYPICAL SECTIONS
STA. 382+30.0 TO 414+88.8

ROUTE	SECTION	SECTION NUMBER	SHEET	SHEETS
CH31	80	16-00080-61-RS	7	66

FILE NAME: U:\Design\Russo\16-00080-61-RS Microsurfacing 2016\CAD\16-00080-61-RS.dgn

1 SCHEDULE OF LONGITUDINAL LANE LINE PATCHING

FROM STATION	TO STATION	LT/RT	LENGTH (ft)	WIDTH (ft)	TOTAL AREA (sq yd)	RAISED REFLECTIVE PAVEMENT MARKER REMOVAL 78300200 (EACH)	HOT-MIX ASPHALT SURFACE REMOVAL, SPECIAL X4400196 (SQ YD)	BITUMINOUS MATERIALS (TACK COAT) 40800029 (POUND)	HOT-MIX ASPHALT SURFACE COURSE, MIX "D", N70 40603340 (TON)
234+05.0	352+90.0	LT	11899.4	2.0	2644.4	298	2644.4	1190.0	222.2
382+30.0	384+14.7	LT	184.8	2.0	41.1	6	41.1	18.5	3.5
385+65.7	414+86.8	LT	2895.2	2.0	643.4	74	643.4	289.6	54.1
234+05.0	352+90.0	RT	11870.7	2.0	2638.0	298	2638.0	1187.1	221.6
382+30.0	384+14.7	RT	184.8	2.0	41.1	6	41.1	18.5	3.5
385+65.7	410+22.3	RT	2476.1	2.0	550.3	62	550.3	247.7	46.3
SUBTOTAL PATCHING RELATED ITEMS						744	6558.3	2951.4	551.2
CONTINGENCY + 5%						38	328.0	147.6	27.6
TOTAL PATCHING RELATED ITEMS						**782**	**6886.3**	**3099.0**	**578.8**

PROJECT DATA

EXISTING MARKER SPACING:	80	FEET (INSTALLED IN PAIRS)
TACK COAT APPLICATION RATE:	0.45	LB / SY
HMA PATCHING DEPTH:	1.5	INCH
HMA SURFACE UNIT WEIGHT:	112.0	LB / SY / INCH THICKNESS

2 SCHEDULE OF SHORT TERM PAVEMENT MARKINGS, PAVEMENT MARKING TAPE, TYPE III 4" and SHORT TERM PAVEMENT MARKING REMOVAL

MICROSURFACING AREAS

FROM STATION	TO STATION	LT/RT	LENGTH (ft)	DESCRIPTION	QUANTITY (ft)
LETTERS & SYMBOLS - WHITE					
235+11.3	235+43.3	CL	32.0	LEFT TURN ONLY	109.0
238+65.5	238+97.5	CL	32.0	LEFT TURN ONLY	109.0
242+61.6	242+93.6	LT	32.0	RIGHT TURN ONLY	109.0
255+36.6	255+68.6	CL	32.0	LEFT TURN ONLY	109.0
280+06.6	280+38.6	RT	32.0	RIGHT TURN ONLY	109.0
283+79.3	284+11.3	CL	32.0	LEFT TURN ONLY	109.0
302+21.0	302+53.0	CL	32.0	LEFT TURN ONLY	109.0
382+54.7	382+86.7	LT	32.0	LEFT TURN ONLY	109.0
383+67.7	383+99.7	LT	32.0	LEFT TURN ONLY	109.0
383+67.7	383+99.7	RT	32.0	RIGHT TURN ONLY	109.0
385+82.7	386+14.7	RT	32.0	LEFT TURN ONLY	109.0
387+38.3	387+70.3	RT	32.0	LEFT TURN ONLY	109.0
403+20.7	403+52.7	CL	32.0	LEFT TURN ONLY	109.0
406+66.8	406+98.8	CL	32.0	LEFT TURN ONLY	109.0
408+07.6	408+39.6	RT	32.0	RIGHT TURN ONLY	109.0
408+13.2	408+45.2	CL	32.0	LEFT TURN ONLY	109.0
410+22.2	410+54.2	CL	32.0	LEFT TURN ONLY	109.0
410+27.2	410+59.2	RT	32.0	RIGHT TURN ONLY	109.0
411+10.9	411+42.9	LT	32.0	RIGHT TURN ONLY	109.0
411+45.3	411+77.3	CL	32.0	LEFT TURN ONLY	109.0
413+24.9	413+56.9	CL	32.0	LEFT TURN ONLY	109.0
413+24.9	413+56.9	RT	32.0	THRU ONLY	109.0
413+24.9	413+56.9	RT	32.0	RIGHT TURN ONLY	109.0
413+24.9	413+56.9	RT	32.0	RIGHT TURN ONLY	109.0
414+10.7	414+42.7	RT	32.0	RIGHT TURN ONLY	109.0
414+10.7	414+42.7	RT	32.0	RIGHT TURN ONLY	109.0
414+18.7	414+50.7	CL	32.0	LEFT TURN ONLY	109.0
4" 4'/40' DOUBLE YELLOW DASH (MULTIPLIED BY 2)					
234+05.0	239+95.5	LT/RT	590.9	4'/40' DOUBLE DASH	108.0
241+42.4	255+26.9	LT/RT	2773.1	4'/40' DOUBLE DASH	505.0
255+26.9	257+11.9	LT	185.2	4'/40' DOUBLE DASH	34.0
257+68.7	281+70.8	LT/RT	4811.4	4'/40' DOUBLE DASH	875.0
282+61.3	284+21.3	RT	160.0	4'/40' DOUBLE DASH	30.0
284+21.3	299+97.1	LT/RT	3158.2	4'/40' DOUBLE DASH	575.0
301+03.0	302+63.0	RT	160.0	4'/40' DOUBLE DASH	30.0
302+63.0	352+90.0	LT/RT	10054.4	4'/40' DOUBLE DASH	1829.0
382+30.0	382+44.7	LT	29.7	4'/40' DOUBLE DASH	6.0
387+80.3	403+10.7	LT/RT	3060.4	4'/40' DOUBLE DASH	557.0
403+10.7	404+10.7	LT	99.4	4'/40' DOUBLE DASH	19.0
405+51.8	409+28.2	RT	376.8	4'/40' DOUBLE DASH	69.0
410+12.2	410+37.3	RT	25.2	4'/40' DOUBLE DASH	5.0
410+37.3	411+87.3	RT	303.2	4'/40' DOUBLE DASH	56.0
411+87.3	414+87.0	LT/RT	299.8	4'/40' DOUBLE DASH	55.0

FROM STATION	TO STATION	LT/RT	LENGTH (ft)	DESCRIPTION	QUANTITY (ft)
4" 4'/40' WHITE DASH					
234+05.0	239+95.5	LT	591.2	4'/40' DASH	54.0
241+43.6	257+11.9	LT	1572.9	4'/40' DASH	143.0
257+70.6	299+95.1	LT	4221.3	4'/40' DASH	384.0
301+03.0	352+90.0	LT	5198.8	4'/40' DASH	473.0
382+30.0	384+09.7	LT	179.8	4'/40' DASH	17.0
385+70.7	404+26.1	LT	1848.2	4'/40' DASH	169.0
405+54.1	414+88.8	LT	916.9	4'/40' DASH	84.0
234+05.0	239+95.5	RT	589.8	4'/40' DASH	54.0
241+43.6	281+68.9	RT	4023.8	4'/40' DASH	366.0
282+52.6	299+95.1	RT	1742.6	4'/40' DASH	159.0
301+03.0	352+90.0	RT	5175.2	4'/40' DASH	471.0
382+30.0	384+09.7	RT	179.8	4'/40' DASH	17.0
385+70.7	404+26.1	RT	1863.3	4'/40' DASH	170.0
405+43.9	410+17.2	RT	482.6	4'/40' DASH	44.0
4" SOLID WHITE LINE					
234+05.0	235+53.3	LT	148.3	TURN LANE	148.3
241+43.6	243+03.6	LT	160.8	TURN LANE	160.8
282+61.3	284+21.3	LT	160.0	TURN LANE	160.0
301+03.0	302+63.0	LT	160.0	TURN LANE	160.0
382+30.0	384+09.7	LT	359.7	CHANNELIZING ISLAND	359.7
			179.7	ISLAND DIAGONALS	24.0
385+70.7	389+35.7	LT	730.5	CHANNELIZING ISLAND	730.5
			365.0	ISLAND DIAGONALS	48.0
405+51.8	406+76.8	LT	124.3	TURN LANE	124.3
410+12.2	411+87.3	LT	173.9	TURN LANE	173.9
410+27.9	411+52.9	LT	120.9	TURN LANE	120.9
411+52.9	414+30.6	LT	277.7	SHOULDER DIAGONALS	16.0
238+55.5	239+95.5	RT	139.9	TURN LANE	139.9
255+26.9	257+11.9	RT	184.9	TURN LANE	184.9
279+96.6	281+55.6	RT	160.0	TURN LANE	160.0
382+30.0	384+09.7	RT	179.8	TURN LANE	179.8
389+35.7	390+91.5	RT	155.9	CHANNELIZING ISLAND	155.9
403+10.7	404+10.7	RT	100.7	TURN LANE	100.7
407+97.6	409+28.1	RT	134.9	TURN LANE	134.9
408+03.2	409+28.2	RT	125.9	TURN LANE	125.9
410+17.2	414+87.0	RT	485.4	TURN LANE	485.4
410+28.0	412+73.8	RT	245.8	SHOULDER DIAGONALS	16.0
413+14.9	414+38.1	RT	124.6	TURN LANE	124.6
413+14.9	414+86.8	RT	172.3	TURN LANE	172.3
414+38.1	414+86.8	RT	97.4	CHANNELIZING ISLAND	97.4

SUBTOTAL

MICROSURFACING AREAS	(FOOT)	SUBTOTAL (1 APPLICATION)	14605.1

MICROSURFACING OMISSION AREA (STA. 352+90.0 TO STA. 382+30.0)

FROM STATION	TO STATION	LT/RT	LENGTH (ft)	DESCRIPTION	QUANTITY (ft)
LETTERS & SYMBOLS - WHITE					
382+00.0	382+32.0	RT	32.0	RIGHT TURN ONLY	109.0
4" 4'/40' DOUBLE YELLOW DASH (MULTIPLIED BY 2)					
352+90.0	382+30.0	LT/RT	2951.9	4'/40' DOUBLE DASH	537.0
4" 4'/40' WHITE DASH					
352+90.0	382+30.0	LT	2931.0	4'/40' DASH	267.0
352+90.0	382+30.0	RT	2949.9	4'/40' DASH	269.0

FROM STATION	TO STATION	LT/RT	LENGTH (ft)	DESCRIPTION	QUANTITY (ft)
4" SOLID WHITE LINE					
234+05.0	235+53.3	LT	226.9	CHANNELIZING ISLAND	226.9
			148.3	ISLAND DIAGONALS	16.0
381+90.0	382+30.0	RT	40	TURN LANE	40.0

SUBTOTAL

MICROSURFACING OMISSION AREA	(FOOT)	SUBTOTAL (1 APPLICATION)	1464.9

PAY CODE				
70300100	SHORT-TERM PAVEMENT MARKING	(FOOT)	MICROSURFACING AREAS	SUBTOTAL (3 APPLICATIONS) 43815.3
			MICROSURFACING OMISSION AREA	SUBTOTAL (0 APPLICATIONS) 0.0
				TOTAL QUANTITY 43815.3
70300520	PAVEMENT MARKING TAPE, TYPE III 4"	(FOOT)	MICROSURFACING AREAS	SUBTOTAL (1 APPLICATION) 14605.1
			MICROSURFACING OMISSION AREA	SUBTOTAL (1 APPLICATION) 1464.9
				TOTAL QUANTITY 16070.0
70300150	SHORT TERM PAVEMENT MARKING REMOVAL	(SQ FT)	MICROSURFACING AREAS	SUBTOTAL (4 APPLICATIONS) 19278.8
			MICROSURFACING OMISSION AREA	SUBTOTAL (1 APPLICATION) 483.5
				TOTAL QUANTITY 19762.3

3A TEMPORARY PAVEMENT MARKING - LETTERS AND SYMBOLS

FROM STATION	TO STATION	LT/RT	LENGTH (ft)	DESCRIPTION	QUANTITY (SQ FT)
LETTERS & SYMBOLS - WHITE					
235+11.3	235+43.3	CL	32.0	LEFT TURN ONLY	36.4
238+65.5	238+97.5	CL	32.0	LEFT TURN ONLY	36.4
242+61.6	242+93.6	LT	32.0	RIGHT TURN ONLY	36.4
255+36.6	255+68.6	CL	32.0	LEFT TURN ONLY	36.4
280+06.6	280+38.6	RT	32.0	RIGHT TURN ONLY	36.4
283+79.3	284+11.3	CL	32.0	LEFT TURN ONLY	36.4
302+21.0	302+53.0	CL	32.0	LEFT TURN ONLY	36.4
382+00.0	382+32.0	RT	32.0	RIGHT TURN ONLY	36.4
382+54.7	382+86.7	LT	32.0	LEFT TURN ONLY	36.4
383+67.7	383+99.7	LT	32.0	LEFT TURN ONLY	36.4
383+67.7	383+99.7	RT	32.0	RIGHT TURN ONLY	36.4
385+82.7	386+14.7	RT	32.0	LEFT TURN ONLY	36.4
387+38.3	387+70.3	RT	32.0	LEFT TURN ONLY	36.4
403+20.7	403+52.7	CL	32.0	LEFT TURN ONLY	36.4
406+66.8	406+98.8	CL	32.0	LEFT TURN ONLY	36.4
408+07.6	408+39.6	RT	32.0	RIGHT TURN ONLY	36.4
408+13.2	408+45.2	CL	32.0	LEFT TURN ONLY	36.4
410+22.2	410+54.2	CL	32.0	LEFT TURN ONLY	36.4
410+27.2	410+59.2	RT	32.0	RIGHT TURN ONLY	36.4
411+10.9	411+42.9	LT	32.0	RIGHT TURN ONLY	36.4
411+45.3	411+77.3	CL	32.0	LEFT TURN ONLY	36.4
413+24.9	413+56.9	CL	32.0	LEFT TURN ONLY	36.4
413+24.9	413+56.9	RT	32.0	THRU ONLY	36.4
413+24.9	413+56.9	RT	32.0	RIGHT TURN ONLY	36.4
413+24.9	413+56.9	RT	32.0	RIGHT TURN ONLY	36.4
414+10.7	414+42.7	RT	32.0	RIGHT TURN ONLY	36.4
414+10.7	414+42.7	RT	32.0	RIGHT TURN ONLY	36.4
414+42.7	414+74.7	CL	32.0	RIGHT TURN ONLY	36.4
PAY CODE 70300210				TOTAL	1019.2

10 ESTIMATED & CONTINGENT ITEMS

PAY CODE	DESCRIPTION	UNIT	QUANTITY
LR400300	BLOTTER AGGREGATE	TON	50.0
X0326220	MICRO-SURFACING RUT FILLING	FOOT	1000.0
X3200001	BUMP REMOVAL	EACH	50.0

11 INSTALL SURVEY MONUMENTS

PAY CODE	DESCRIPTION	UNIT	QUANTITY
LC600200	INSTALL SURVEY MONUMENTS	EACH	10.0

3B TEMPORARY PAVEMENT MARKING - LINE 4"

FROM STATION	TO STATION	LT/RT	LENGTH (ft)	DESCRIPTION	QUANTITY (FOOT)
4" DOUBLE SOLID YELLOW LINE = LENGTH X 2					
234+05.0	239+95.5	LT/RT	590.9	DOUBLE YELLOW - LINE	1181.8
241+42.4	255+26.9	LT/RT	2773.1	DOUBLE YELLOW - MEDIAN	5546.2
255+26.9	257+11.9	LT	185.2	DOUBLE YELLOW - LINE	370.4
257+68.7	281+70.8	LT/RT	4811.4	DOUBLE YELLOW - MEDIAN	9622.8
282+61.3	284+21.3	RT	160.0	DOUBLE YELLOW - LINE	320.0
284+21.3	299+97.1	LT/RT	3158.2	DOUBLE YELLOW - MEDIAN	6316.4
301+03.0	302+63.0	RT	160.0	DOUBLE YELLOW - LINE	320.0
302+63.0	382+44.7	LT/RT	15965.6	DOUBLE YELLOW - MEDIAN	31931.2
387+80.3	403+10.7	LT/RT	3060.4	DOUBLE YELLOW - MEDIAN	6120.8
403+10.7	404+10.7	LT	99.4	DOUBLE YELLOW - LINE	198.8
405+51.8	409+28.2	RT	376.8	DOUBLE YELLOW - LINE	753.6
410+12.2	410+37.3	RT	25.2	DOUBLE YELLOW - LINE	50.4
410+37.3	411+87.3	RT	303.2	DOUBLE YELLOW - MEDIAN	606.4
411+87.3	414+86.8	LT/RT	299.8	DOUBLE YELLOW - LINE	599.6
4" SOLID YELLOW LINE					
382+44.7	384+10.7	LT	333.6	CONCRETE ISLAND OUTLINE	333.6
385+70.7	387+80.3	RT	420.6	CONCRETE ISLAND OUTLINE	420.6
4" 10'/30' SKIP/DASH WHITE LINE = LENGTH X 0.25					
234+05.0	239+95.5	LT	591.2	LANE LINE	147.8
241+43.6	257+11.9	LT	1572.9	LANE LINE	393.3
257+70.6	299+95.1	LT	4221.3	LANE LINE	1055.4
301+03.0	384+09.7	LT	8309.9	LANE LINE	2077.5
385+70.7	404+26.1	LT	1848.2	LANE LINE	462.1
405+54.1	414+86.8	LT	916.9	LANE LINE	229.3
234+05.0	239+95.5	RT	589.8	LANE LINE	147.5
241+43.6	281+68.9	RT	4023.8	LANE LINE	1006.0
282+52.6	299+95.1	RT	1742.6	LANE LINE	435.7
301+03.0	384+09.7	RT	8304.8	LANE LINE	2076.2
385+70.7	404+26.1	RT	1863.3	LANE LINE	465.9
405+43.9	410+17.2	RT	482.6	LANE LINE	120.7
PAY CODE	70300220			TOTAL	73310.0

3C TEMPORARY PAVEMENT MARKING - LINE 5"

FROM STATION	TO STATION	LT/RT	LENGTH (ft)	DESCRIPTION	QUANTITY (FOOT)
5" SOLID WHITE LINE					
NW Return - Hook Drive		LT	30.3	EDGE LINE @ RETURN	30.3
234+05.0	239+79.6	LT	575.7	EDGE LINE	575.7
241+35.9	245+03.6	LT	370.3	EDGE LINE	370.3
245+03.6	256+89.5	LT	1191.6	EDGE LINE	1191.6
257+80.6	382+81.7	LT	12500.4	EDGE LINE	12500.4
382+81.7	384+01.2	LT	120.4	EDGE LINE	120.4
NW Return - US Route 45		LT	65.3	EDGE LINE @ RETURN	65.3
NE Return - US Route 45		LT	82.8	EDGE LINE @ RETURN	82.8
386+01.8	404+07.7	LT	1794.5	EDGE LINE	1794.5
405+54.1	409+06.6	LT	341.2	EDGE LINE	341.2
SW Return - Med. Office DW		LT	32.5	EDGE LINE @ RETURN	32.5
410+34.9	414+88.8	LT	446.9	EDGE LINE	446.9
234+05.0	277+96.6	RT	4387.4	EDGE LINE	4387.4
277+96.6	281+55.5	RT	359.2	EDGE LINE	359.2
SE Return - Corillon Drive		RT	24.5	EDGE LINE	24.5
282+52.6	299+76.1	RT	1723.6	EDGE LINE	1723.6
301+26.5	379+45.9	RT	7816.9	EDGE LINE	7816.9
379+45.9	383+88.1	RT	442.4	EDGE LINE	442.4
SW Return - US Route 45		RT	59.7	EDGE LINE @ RETURN	59.7
SE Return - US Route 45		RT	78.8	EDGE LINE @ RETURN	78.8
385+82.0	404+26.1	RT	1857.1	EDGE LINE	1857.1
405+42.5	406+37.7	RT	98.2	EDGE LINE	98.2
406+37.7	409+17.5	RT	292.1	EDGE LINE	292.1
SE Return - Low es Driveway		RT	23.0	EDGE LINE @ RETURN	23.0
410+28.0	414+88.8	RT	488.8	EDGE LINE	488.8
PAY CODE	70300230			TOTAL	35203.6

3D TEMPORARY PAVEMENT MARKING - LINE 6"

FROM STATION	TO STATION	LT/RT	LENGTH (ft)	DESCRIPTION	QUANTITY (FOOT)
6" SOLID WHITE LINE					
234+05.0	235+53.3	LT	148.3	TURN LANE	148.3
241+43.6	243+03.6	LT	160.8	TURN LANE	160.8
282+61.3	284+21.3	LT	160.0	TURN LANE	160.0
301+03.0	302+63.0	LT	160.0	TURN LANE	160.0
405+51.8	406+76.8	LT	124.3	TURN LANE	124.3
410+12.2	411+87.3	LT	173.9	TURN LANE	173.9
410+27.9	411+52.9	LT	120.9	TURN LANE	120.9
238+55.5	239+95.5	RT	139.9	TURN LANE	139.9
255+26.9	257+11.9	RT	184.9	TURN LANE	184.9
279+96.6	781+55.6	RT	160.0	TURN LANE	160.0
381+90.0	384+09.7	RT	219.8	TURN LANE	219.8
403+10.7	404+10.7	RT	100.7	TURN LANE	100.7
407+97.6	409+28.1	RT	134.9	TURN LANE	134.9
408+03.2	409+28.2	RT	125.9	TURN LANE	125.9
410+17.2	414+86.8	RT	485.4	TURN LANE	485.4
413+14.9	414+38.1	RT	124.6	TURN LANE	124.6
413+14.9	414+87.3	RT	138.3	TURN LANE	138.3
6" 2'/6' DOTTED WHITE LINE = LENGTH X 0.25					
235+53.3	238+55.5	LT	302.3	2'/6' DOTTED	75.6
243+03.6	245+03.6	LT	201.0	2'/6' DOTTED	50.3
406+76.8	408+03.2	LT	125.6	2'/6' DOTTED	31.4
411+52.9	413+12.9	LT	154.7	2'/6' DOTTED	38.7
411+87.3	413+12.3	LT	124.2	2'/6' DOTTED	31.1
235+53.3	238+55.5	RT	302.2	2'/6' DOTTED	75.6
253+26.9	255+26.9	RT	199.9	2'/6' DOTTED	50.0
379+45.9	381+90.0	RT	244.2	2'/6' DOTTED	61.1
401+10.7	403+10.7	RT	201.3	2'/6' DOTTED	50.4
406+37.7	408+97.6	RT	165.1	2'/6' DOTTED	41.3
406+76.8	408+03.2	RT	127.3	2'/6' DOTTED	31.9
411+54.9	413+14.9	RT	163.9	2'/6' DOTTED	41.0
411+55.0	413+14.9	RT	161.7	2'/6' DOTTED	40.5
PAY CODE	70300240			TOTAL	3481.5

3E TEMPORARY PAVEMENT MARKING - LINE 8"

FROM STATION	TO STATION	LT/RT	LENGTH (ft)	DESCRIPTION	QUANTITY (FOOT)
8" SOLID WHITE LINE					
381+16.8	384+09.7	LT	586.5	CHANNELIZING ISLAND	586.5
385+70.7	389+35.7	LT	730.5	CHANNELIZING ISLAND	730.5
414+38.1	414+85.1	RT	97.4	CHANNELIZING ISLAND	97.4
8" 2'/6' DOTTED WHITE LINE = LENGTH X 0.25					
379+45.9	381+16.8	RT	171.0	2'/6' DOTTED	42.8
389+35.7	390+91.5	LT	155.9	2'/6' DOTTED	39.0
PAY CODE	70300250			TOTAL	1496.2

3F TEMPORARY PAVEMENT MARKING - LINE 12"

FROM STATION	TO STATION	NUMBER OF STRIPES	AVG. LEN. (ft)	DESCRIPTION	QUANTITY (FOOT)
12" SOLID YELLOW LINE					
241+42.4	255+26.9	28	13.8	MEDIAN DIAGONALS	386.4
257+68.7	281+70.8	39	15.4	MEDIAN DIAGONALS	600.6
284+21.3	299+97.1	30	13.9	MEDIAN DIAGONALS	417.0
302+63.0	382+44.7	122	16.6	MEDIAN DIAGONALS	2025.2
387+80.3	403+10.7	39	18.0	MEDIAN DIAGONALS	702.0
410+37.3	411+87.3	5	5.6	MEDIAN DIAGONALS	28.0
12" SOLID WHITE LINE					
Hook Drive (West Leg)		21	6.0	6' CROSSWALK	126.0
Drury Lane (West Leg)		21	6.0	6' CROSSWALK	126.0
381+16.8	384+09.7	13	13.3	ISLAND CHEVRONS	172.9
385+70.7	389+35.7	17	14.5	ISLAND CHEVRONS	246.5
414+38.1	414+85.1	3	7.8	ISLAND CHEVRONS	23.4
410+28.0	412+73.8	9	10.3	SHOULDER DIAGONALS	92.7
411+52.9	414+30.6	10	10.8	SHOULDER DIAGONALS	108.0
PAY CODE	70300260			TOTAL	5054.7

3G TEMPORARY PAVEMENT MARKING - LINE 24"

FROM STATION	TO STATION	LT/RT	LENGTH (ft)	DESCRIPTION	QUANTITY (FOOT)
24" SOLID WHITE LINE					
Hook Drive (Sta. 239+95.5)		LT/RT	33.0	STOP BAR	33.0
Hook Drive (Sta. 241+35.9)		LT	33.0	STOP BAR	33.0
Drury Lane (Sta. 299+65.1)		RT	25.8	STOP BAR	25.8
Drury Lane (Sta. 301+03.0)		LT/RT	33.0	STOP BAR	33.0
U.S. Route 45 (Sta. 384+09.7)		LT/RT	65.6	STOP BAR	65.6
U.S. Route 45 (Sta. 385+70.7)		LT/RT	56.0	STOP BAR	56.0
IL Route 132 (Sta. 414+85.1)		RT	14.4	STOP BAR	14.4
IL Route 132 (Sta. 414+86.8)		LT/RT	24.0	STOP BAR	24.0
IL Route 132 (Sta. 414+87.3)		RT	18.0	STOP BAR	18.0
PAY CODE	70300280			TOTAL	302.8

4 PAINT PAVEMENT MARKING - LINE 5"

FROM STATION	TO STATION	LT/RT	LENGTH (ft)	DESCRIPTION	QUANTITY (FOOT)
5" SOLID WHITE LINE					
234+05.0	239+79.6	LT	575.7	EDGE LINE	575.7
245+03.6	256+89.5	LT	1191.6	EDGE LINE	1191.6
257+80.6	382+81.7	LT	12500.4	EDGE LINE	12500.4
386+01.8	404+07.7	LT	1794.5	EDGE LINE	1794.5
405+54.1	409+06.6	LT	341.2	EDGE LINE	341.2
234+05.0	277+96.6	RT	4387.4	EDGE LINE	4387.4
282+52.6	299+76.1	RT	1723.6	EDGE LINE	1723.6
301+26.5	379+45.9	RT	7816.9	EDGE LINE	7816.9
385+82.0	404+26.1	RT	1857.1	EDGE LINE	1857.1
405+42.5	406+37.7	RT	98.2	EDGE LINE	98.2
PAY CODE	78001120			TOTAL	32286.6

6 SEAL COAT

FROM STATION	TO STATION	LT/RT	LENGTH (ft)	AVERAGE WIDTH (ft)	TOTAL AREA (sq yd)
234+74.0	239+96.0	LT	522.0	4.0	232.3
241+05.4	257+04.2	LT	1598.8	4.0	713.2
257+66.2	299+97.4	LT	4231.2	4.0	1875.5
300+07.4	328+38.9	LT	2831.5	---	1305.6
332+27.4	336+55.9	LT	428.5	---	230.7
340+59.0	376+02.7	LT	3543.7	4.0	1566.6
376+02.7	382+18.3	LT	615.6	8.0	546.9
382+18.3	384+02.6	LT	184.3	4.0	83.0
386+01.8	404+48.8	LT	1847.0	4.0	815.8
240+07.7	281+64.0	RT	4156.3	4.0	1844.4
282+40.5	299+95.2	RT	1754.7	4.0	777.8
301+06.5	308+50.0	RT	743.5	4.0	327.7
315+98.0	327+22.9	RT	1124.9	---	441.8
330+91.6	338+17.5	RT	725.9	---	350.9
340+86.3	347+48.2	RT	661.9	---	340.2
367+29.0	383+88.1	RT	1659.1	4.0	738.5
385+97.9	404+52.1	RT	1854.2	4.0	831.6
405+15.8	409+34.3	RT	418.5	4.0	242.4
410+13.6	414+71.6	RT	458.0	4.0	318.2

SEAL COAT		SUBTOTAL	13583.1
PAY CODE	(SQ YD)	CONTINGENCY + 10%	1358.4
LC400202		TOTAL	14941.5

REVISIONS / REMARKS					
NO.	DESCRIPTION	DATE	BY	SURVEYOR:	___/___
		___/___/___	___	DSGNR/LIAISON:	___/___
		___/___/___	___	PLOTTED BY:	$USRN$ $$DAT$$$$

FILE NAME: $FILE$

MICROSURFACING 2016
ROLLINS ROAD (HOOK DRIVE TO IL 132)

LakeCounty
Division of Transportation

SCHEDULE OF QUANTITIES

ROUTE	SECTION	SECTION NUMBER	SHEET	SHEETS
CH31	80	16-00080-61-RS	9	66

5 SCHEDULE OF THERMOPLASTIC PAVEMENT MARKING REMOVAL

FROM STATION	TO STATION	DESCRIPTION	CUMULATIVE PVMT. MKG. REMOVAL LENGTHS (ft)	4" THERMO (sq ft)	5" THERMO (sq ft)	6" THERMO (sq ft)	8" THERMO (sq ft)	12" THERMO (sq ft)	24" THERMO (sq ft)	LETTERS & SYMBOLS THERMO (sq ft)
234+05.0	239+95.5	DOUBLE YELLOW CENTERLINE	1182.0	394.0						
		SOLID WHITE TURN LANE LINE	288.2			144.1				
		2'/6' DOTTED WHITE LINE	151.2			75.6				
		STOP BAR	33.0						66.0	
		LEFT TURN ONLY	(2 EA)							72.8
HOOK DRIVE		EDGELINE @ NW RETURN	30.3		12.7					
		CROSSWALK (WEST LEG)	126.0					126.0		
241+35.9	257+11.9	DOUBLE YELLOW MEDIAN OUTLINE	5916.8	1972.3						
		EDGELINE	370.4		154.4					
		SOLID WHITE TURN LANE LINE	345.7			172.9				
		2'/6' DOTTED WHITE LINE	100.3			50.2				
		MEDIAN DIAGONALS	385.9					385.9		
		STOP BAR	33.0						66.0	
		RIGHT / LEFT TURN ONLY	(2 EA)							72.8
257+68.7	281+70.8	DOUBLE YELLOW MEDIAN OUTLINE	9622.8	3207.6						
		EDGELINE	359.2		149.7					
		SOLID WHITE TURN LANE LINE	160.0			80.0				
		MEDIAN DIAGONALS	614.0					614.0		
		RIGHT TURN ONLY	(1 EA)							36.4
CARILLON DRIVE		EDGELINE @ SE RETURN	24.5		10.3					
282+61.3	300+97.1	DOUBLE YELLOW MEDIAN OUTLINE	6636.4	2212.2						
		SOLID WHITE TURN LANE LINE	160.0			80.0				
		MEDIAN DIAGONALS	414.9					414.9		
		STOP BAR	25.8						51.6	
		LEFT TURN ONLY	(1 EA)							36.4
DRURY LANE		CROSSWALK (WEST LEG)	126.0					126.0		
301+03.0	352+90.0	DOUBLE YELLOW MEDIAN OUTLINE	20428.8	6809.6						
		SOLID WHITE TURN LANE LINE	160.0			80.0				
		MEDIAN DIAGONALS	1080.0					1080.0		
		STOP BAR	33.0						66.0	
		LEFT TURN ONLY	(1 EA)							36.4
382+30.0	384+09.7	DOUBLE YELLOW MEDIAN OUTLINE	59.4	19.8						
		SOLID YELLOW CONC. MED. OUTLINE	333.6	111.2						
		EDGELINE	278.5		116.1					
		SOLID WHITE TURN LANE LINE	179.8			89.9				
		SOLID WHITE CHANNELIZING LINES	362.1				241.4			
		MEDIAN DIAGONALS	3.0					3.0		
		TURN LANE CHEVRONS	152.1					152.1		
		STOP BAR	65.6						131.2	
		RIGHT / LEFT TURN ONLY	(3 EA)							109.2
U.S. ROUTE 45		EDGELINE @ NE RETURN	82.8		34.5					
		EDGELINE @ NW RETURN	65.3		27.3					
		EDGELINE @ SE RETURN	78.8		32.9					
		EDGELINE @ SW RETURN	59.7		24.9					
385+70.7	404+10.7	DOUBLE YELLOW MEDIAN OUTLINE	6318.0	2106						
		SOLID YELLOW CONC. MED. OUTLINE	420.6	140.2						
		SOLID WHITE TURN LANE LINE	100.7			50.4				
		2'/6' DOTTED WHITE LINE	89.3				59.6			
		SOLID WHITE CHANNELIZING LINES	728.6				485.8			
		MEDIAN DIAGONALS	677.7					677.7		
		TURN LANE CHEVRONS	245.2					245.2		
		STOP BAR	56.0						112.0	
		LEFT TURN ONLY	(3 EA)							109.2
405+51.8	409+38.4	DOUBLE YELLOW CENTERLINE	753.6	251.2						
		EDGELINE	347.7		144.9					
		SOLID WHITE TURN LANE LINE	385.1			192.6				
		2'/6' DOTTED WHITE LINE	104.5			52.3				
		RIGHT / LEFT TURN ONLY	(3 EA)							109.2
410+12.3	414+88.8	DOUBLE YELLOW MEDIAN OUTLINE	590.6	196.9						
		DOUBLE YELLOW CENTERLINE	665.8	222						
		EDGELINE	935.7		389.9					
		SOLID WHITE TURN LANE LINE	1077.1			538.6				
		2'/6' DOTTED WHITE LINE	151.2			75.6				
		SOLID WHITE CHANNELIZING LINES	97.4				65.0			
		MEDIAN DIAGONALS	28.0					28.0		
		SHOULDER DIAGONALS	200.7					200.7		
		TURN LANE CHEVRONS	23.3					23.3		
		STOP BAR	56.4						112.8	
		RIGHT / LEFT /THRU ONLY	(11 EA)							400.4
SUBTOTAL PAVEMENT MARKING REMOVAL ITEMS				17643.0	1097.6	1682.2	851.8	4076.8	605.6	982.8
CONTINGENCY + 5%				882.2	54.9	84.2	42.6	203.9	30.3	49.2
TOTAL PAVEMENT MARKING REMOVAL ITEMS				18525.2	1152.5	1766.4	894.4	4280.7	635.9	1032.0
PAY CODE		PAVEMENT MARKING REMOVAL - WATER BLASTING	(SQ FT)	28287.1						
X0327980										

7 SCHEDULE OF MICROSURFACING and FIBER ASPHALT

FROM STATION	TO STATION	LT/RT	LENGTH (ft)	AVERAGE WIDTH (ft)	TOTAL AREA (sq yd)
234+05.0	239+79.6	LT	574.6	27.5	1755.8
239+79.6	240+06.9	LT	27.3	33.0	100.2
240+06.9	243+03.6	LT	296.7	38.5	1269.3
243+03.6	245+03.6	LT	200.0	33.0	733.4
245+03.6	326+50.0	LT	8146.4	27.5	24891.8
326+50.0	333+38.0	LT	688.0	29.5	2255.2
333+38.0	334+84.6	LT	146.6	27.5	448.0
334+84.6	340+59.0	LT	574.4	29.5	1882.8
340+59.0	352+90.0	LT	1231.0	27.5	3761.4
382+30.0	384+52.0	LT	---	---	1401.4
385+30.2	386+01.8	LT	---	---	398.2
386+01.8	391+43.8	LT	542.0	39.0	2348.7
391+43.8	395+48.8	LT	405.0	34.5	1552.5
395+48.8	409+06.6	LT	1357.8	30.0	4526.0
409+06.6	409+37.1	LT	30.5	36.0	122.0
409+37.1	412+88.3	LT	351.2	42.0	1639.0
412+88.3	414+30.6	LT	---	---	670.3
414+30.6	414+88.8	LT	58.2	53.1	343.1
234+05.0	277+96.6	RT	4391.6	27.5	13418.8
277+96.6	279+96.6	RT	200.0	33.0	733.4
279+96.6	282+31.8	RT	235.2	38.5	1006.2
282+31.8	282+52.6	RT	20.8	33.0	76.3
282+52.6	308+50.0	RT	2597.4	27.5	7936.5
308+50.0	317+97.7	RT	947.7	29.5	3106.4
317+97.7	321+37.2	RT	339.5	27.5	1037.4
321+37.2	324+26.3	RT	289.1	29.5	947.7
324+26.3	326+50.0	RT	223.7	27.5	683.6
326+50.0	332+79.0	RT	629.0	29.5	2061.8
332+79.0	337+34.1	RT	455.1	27.5	1390.6
337+34.1	342+46.7	RT	512.6	29.5	1680.2
342+46.7	346+46.0	RT	399.3	27.5	1220.1
346+46.0	352+90.0	RT	644.0	29.5	2110.9
382+30.0	383+88.1	RT	158.1	36.0	632.4
383+88.1	384+40.4	RT	---	---	253.7
384+30.2	387+83.3	RT	---	---	1036.8
387+83.3	391+86.6	RT	403.3	34.5	1546.0
391+86.6	406+37.7	RT	1451.1	30.0	4837.0
406+37.7	407+97.6	RT	159.9	36.0	639.7
407+97.6	409+17.5	RT	119.9	42.0	559.6
409+17.5	409+38.4	RT	20.9	45.0	104.6
409+38.4	410+12.9	RT	74.5	48.0	397.4
410+12.9	410+28.0	RT	15.1	45.0	75.5
410+28.0	414+19.5	RT	391.5	42.0	1827.0
414+19.5	414+88.8	RT	69.3	58.3	449.0

MICRO-SURFACING, TWO PASSES		SUBTOTAL	99867.7
PAY CODE	(SQ YD)	CONTINGENCY + 10%	9986.8
LC400205		TOTAL	109854.5

FIBER ASPHALT		Application Rate	
PAY CODE	(POUND)	0.19	pound / square yard
Z0004005		TOTAL	20872.4

REVISIONS / REMARKS					
NO.	DESCRIPTION	DATE	BY	SURVEYOR:	___/___
		__/__/__	___	DSGNR/LIAISON:	___/___
		__/__/__	___	PLOTTED BY:	$USRN$ $$DAT$$$$

FILE NAME: $FILE$

MICROSURFACING 2016
ROLLINS ROAD (HOOK DRIVE TO IL 132)

LakeCounty Division of Transportation

SCHEDULE OF QUANTITIES

ROUTE	SECTION	SECTION NUMBER	SHEET	SHEETS
CH31	80	16-00080-61-RS	10	66

8A GROOVED THERMOPLASTIC PAVEMENT MARKINGS - LETTERS AND SYMBOLS

FROM STATION	TO STATION	LT/RT	LENGTH (ft)	DESCRIPTION	QUANTITY (SQ FT)
LETTERS & SYMBOLS - WHITE					
235+11.3	235+43.3	CL	32.0	LEFT TURN ONLY	36.4
238+65.5	238+97.5	CL	32.0	LEFT TURN ONLY	36.4
242+61.6	242+93.6	LT	32.0	RIGHT TURN ONLY	36.4
255+36.9	255+68.9	CL	32.0	LEFT TURN ONLY	36.4
280+06.6	280+38.6	RT	32.0	RIGHT TURN ONLY	36.4
283+79.3	284+11.3	CL	32.0	LEFT TURN ONLY	36.4
302+21.0	302+53.0	CL	32.0	LEFT TURN ONLY	36.4
382+00.0	382+32.0	RT	32.0	RIGHT TURN ONLY	36.4
382+54.7	382+86.7	LT	32.0	LEFT TURN ONLY	36.4
383+67.7	383+99.7	LT	32.0	LEFT TURN ONLY	36.4
383+67.7	383+99.7	RT	32.0	RIGHT TURN ONLY	36.4
385+82.7	386+14.7	RT	32.0	LEFT TURN ONLY	36.4
387+38.3	387+70.3	RT	32.0	LEFT TURN ONLY	36.4
403+20.7	403+52.7	CL	32.0	LEFT TURN ONLY	36.4
406+44.8	406+66.8	CL	32.0	LEFT TURN ONLY	36.4
408+07.6	408+39.6	RT	32.0	RIGHT TURN ONLY	36.4
408+13.2	408+45.2	CL	32.0	LEFT TURN ONLY	36.4
410+22.2	410+54.2	CL	32.0	LEFT TURN ONLY	36.4
410+27.2	410+59.2	RT	32.0	RIGHT TURN ONLY	36.4
411+10.9	411+42.9	LT	32.0	RIGHT TURN ONLY	36.4
411+45.3	411+77.3	CL	32.0	LEFT TURN ONLY	36.4
413+24.9	413+56.9	CL	32.0	LEFT TURN ONLY	36.4
413+24.9	413+56.9	RT	32.0	THRU ONLY	36.4
413+24.9	413+56.9	RT	32.0	RIGHT TURN ONLY	36.4
413+24.9	413+56.9	RT	32.0	RIGHT TURN ONLY	36.4
414+10.7	414+42.7	RT	32.0	RIGHT TURN ONLY	36.4
414+10.7	414+42.7	RT	32.0	RIGHT TURN ONLY	36.4
414+42.7	414+74.7	CL	32.0	RIGHT TURN ONLY	36.4
PAY CODE	LC780020			TOTAL	1019.2

8D GROOVED THERMOPLASTIC PAVEMENT MARKINGS - LINE 6"

FROM STATION	TO STATION	LT/RT	LENGTH (ft)	DESCRIPTION	QUANTITY (FOOT)
6" SOLID WHITE LINE					
234+05.0	235+53.3	LT	148.3	TURN LANE	148.3
241+43.6	243+03.6	LT	160.8	TURN LANE	160.8
282+61.3	284+21.3	LT	160.0	TURN LANE	160.0
301+03.0	302+63.0	LT	160.0	TURN LANE	160.0
405+51.8	406+76.8	LT	124.3	TURN LANE	124.3
410+12.2	411+87.3	LT	173.9	TURN LANE	173.9
410+27.9	411+52.9	LT	120.9	TURN LANE	120.9
238+55.5	239+95.5	RT	139.9	TURN LANE	139.9
255+26.9	257+11.9	RT	184.9	TURN LANE	184.9
279+96.6	781+55.6	RT	160.0	TURN LANE	160.0
381+90.0	384+09.7	RT	219.8	TURN LANE	219.8
403+10.7	404+10.7	RT	100.7	TURN LANE	100.7
407+97.6	409+28.1	RT	134.9	TURN LANE	134.9
408+03.2	409+28.2	RT	125.9	TURN LANE	125.9
410+17.2	414+86.8	RT	485.4	TURN LANE	485.4
413+14.9	414+38.1	RT	124.6	TURN LANE	124.6
413+14.9	414+87.3	RT	138.3	TURN LANE	138.3
6" 2'/6' DOTTED WHITE LINE = LENGTH X 0.25					
235+53.3	238+55.5	LT	302.3	2'/6' DOTTED	75.6
243+03.6	245+03.6	LT	201.0	2'/6' DOTTED	50.3
406+76.8	408+03.2	LT	125.6	2'/6' DOTTED	31.4
411+52.9	413+12.9	LT	154.7	2'/6' DOTTED	38.7
411+87.3	413+12.3	LT	124.2	2'/6' DOTTED	31.1
235+53.3	238+55.5	RT	302.2	2'/6' DOTTED	75.6
253+26.9	255+26.9	RT	199.9	2'/6' DOTTED	50.0
379+45.9	381+90.0	RT	244.2	2'/6' DOTTED	61.1
401+10.7	403+10.7	RT	201.3	2'/6' DOTTED	50.4
406+37.7	408+97.6	RT	165.1	2'/6' DOTTED	41.3
406+76.8	408+03.2	RT	127.3	2'/6' DOTTED	31.9
411+54.9	413+14.9	RT	163.9	2'/6' DOTTED	41.0
411+55.0	413+14.9	RT	161.7	2'/6' DOTTED	40.5
PAY CODE	LC780023			TOTAL	3481.5

8B GROOVED THERMOPLASTIC PAVEMENT MARKINGS - LINE 4"

FROM STATION	TO STATION	LT/RT	LENGTH (ft)	DESCRIPTION	QUANTITY (FOOT)
4" DOUBLE SOLID YELLOW LINE = LENGTH X 2					
234+05.0	239+95.5	LT/RT	590.9	DOUBLE YELLOW - LINE	1181.8
241+42.4	255+26.9	LT/RT	2773.1	DOUBLE YELLOW - MEDIAN	5546.2
255+26.9	257+11.9	LT	185.2	DOUBLE YELLOW - LINE	370.4
257+68.7	281+70.8	LT/RT	4811.4	DOUBLE YELLOW - MEDIAN	9622.8
282+61.3	284+21.3	RT	160.0	DOUBLE YELLOW - LINE	320.0
284+21.3	299+97.1	LT/RT	3158.2	DOUBLE YELLOW - MEDIAN	6316.4
301+03.0	302+63.0	RT	160.0	DOUBLE YELLOW - LINE	320.0
302+63.0	382+44.7	LT/RT	15965.6	DOUBLE YELLOW - MEDIAN	31931.2
387+80.3	403+10.7	LT/RT	3060.4	DOUBLE YELLOW - MEDIAN	6120.8
403+10.7	404+10.7	LT	99.4	DOUBLE YELLOW - LINE	198.8
405+51.8	409+28.2	RT	376.8	DOUBLE YELLOW - LINE	753.6
410+12.2	410+37.3	RT	25.2	DOUBLE YELLOW - LINE	50.4
410+37.3	411+87.3	RT	303.2	DOUBLE YELLOW - MEDIAN	606.4
411+87.3	414+86.8	LT/RT	299.8	DOUBLE YELLOW - LINE	599.6
4" SOLID YELLOW LINE					
382+44.7	384+10.7	LT	333.6	CONCRETE ISLAND OUTLINE	333.6
385+70.7	387+80.3	RT	420.6	CONCRETE ISLAND OUTLINE	420.6
4" 10'/30' SKIP/DASH WHITE LINE = LENGTH X 0.25					
234+05.0	239+95.5	LT	591.2	LANE LINE	147.8
241+43.6	257+11.9	LT	1572.9	LANE LINE	393.3
257+70.6	299+95.1	LT	4221.3	LANE LINE	1055.4
301+03.0	384+09.7	LT	8309.9	LANE LINE	2077.5
385+70.7	404+26.1	LT	1848.2	LANE LINE	462.1
405+54.1	414+86.8	LT	916.9	LANE LINE	229.3
234+05.0	239+95.5	RT	589.8	LANE LINE	147.5
241+43.6	281+68.9	RT	4023.8	LANE LINE	1006.0
282+52.6	299+95.1	RT	1742.6	LANE LINE	435.7
301+03.0	384+09.7	RT	8304.8	LANE LINE	2076.2
385+70.7	404+26.1	RT	1863.3	LANE LINE	465.9
405+43.9	410+17.2	RT	482.6	LANE LINE	120.7
PAY CODE	LC780021			TOTAL	73310.0

8E GROOVED THERMOPLASTIC PAVEMENT MARKING - LINE 8"

FROM STATION	TO STATION	LT/RT	LENGTH (ft)	DESCRIPTION	QUANTITY (FOOT)
8" SOLID WHITE LINE					
381+16.8	384+09.7	LT	586.5	CHANNELIZING ISLAND	586.5
385+70.7	389+35.7	LT	730.5	CHANNELIZING ISLAND	730.5
414+38.1	414+85.1	RT	97.4	CHANNELIZING ISLAND	97.4
8" 2'/6' DOTTED WHITE LINE = LENGTH X 0.25					
379+45.9	381+16.8	RT	171.0	2'/6' DOTTED	42.8
389+35.7	390+91.5	LT	155.9	2'/6' DOTTED	39.0
PAY CODE	LC780024			TOTAL	1496.2

8G GROOVED THERMOPLASTIC PAVEMENT MARKINGS - LINE 24"

FROM STATION	TO STATION	LT/RT	LENGTH (ft)	DESCRIPTION	QUANTITY (FOOT)
24" SOLID WHITE LINE					
Hook Drive (Sta. 239+95.5)		LT/RT	33.0	STOP BAR	33.0
Hook Drive (Sta. 241+35.9)		LT	33.0	STOP BAR	33.0
Drury Lane (Sta. 299+65.1)		RT	25.8	STOP BAR	25.8
Drury Lane (Sta. 301+03.0)		LT/RT	33.0	STOP BAR	33.0
U.S. Route 45 (Sta. 384+09.7)		LT/RT	65.6	STOP BAR	65.6
U.S. Route 45 (Sta. 385+70.7)		LT/RT	56.0	STOP BAR	56.0
IL Route 132 (Sta. 414+85.1)		RT	14.4	STOP BAR	14.4
IL Route 132 (Sta. 414+86.8)		LT/RT	24.0	STOP BAR	24.0
IL Route 132 (Sta. 414+87.3)		RT	18.0	STOP BAR	18.0
PAY CODE	LC780026			TOTAL	302.8

8C GROOVED THERMOPLASTIC PAVEMENT MARKINGS - LINE 5"

FROM STATION	TO STATION	LT/RT	LENGTH (ft)	DESCRIPTION	QUANTITY (FOOT)
5" SOLID WHITE LINE					
NW Return - Hook Drive		LT	30.3	EDGE LINE @ RETURN	30.3
241+35.9	245+03.6	LT	370.3	EDGE LINE	370.3
382+81.7	384+01.2	LT	120.4	EDGE LINE	120.4
NW Return - US Route 45		LT	65.3	EDGE LINE @ RETURN	65.3
NE Return - US Route 45		LT	82.8	EDGE LINE @ RETURN	82.8
SW Return - Med. Office DW		LT	32.5	EDGE LINE @ RETURN	32.5
410+34.9	414+88.8	LT	446.9	EDGE LINE	446.9
277+96.6	281+55.5	RT	359.2	EDGE LINE	359.2
SE Return - Corillon Drive		RT	24.5	EDGE LINE	24.5
379+45.9	383+88.1	RT	442.4	EDGE LINE	442.4
SW Return - US Route 45		RT	59.7	EDGE LINE @ RETURN	59.7
SE Return - US Route 45		RT	78.8	EDGE LINE @ RETURN	78.8
406+37.7	409+17.5	RT	292.1	EDGE LINE	292.1
SE Return - Lowes Driveway		RT	23.0	EDGE LINE @ RETURN	23.0
410+28.0	414+88.8	RT	488.8	EDGE LINE	488.8
PAY CODE	LC780022			TOTAL	2917.0

8F GROOVED THERMOPLASTIC PAVEMENT MARKINGS - LINE 12"

FROM STATION	TO STATION	NUMBER OF STRIPES	AVG. LEN. (ft)	DESCRIPTION	QUANTITY (FOOT)
12" SOLID YELLOW LINE					
241+42.4	255+26.9	28	13.8	MEDIAN DIAGONALS	386.4
257+68.7	281+70.8	39	15.4	MEDIAN DIAGONALS	600.6
284+21.3	299+97.1	30	13.9	MEDIAN DIAGONALS	417.0
302+63.0	382+44.7	122	16.6	MEDIAN DIAGONALS	2025.2
387+80.3	403+10.7	39	18.0	MEDIAN DIAGONALS	702.0
410+37.3	411+87.3	5	5.6	MEDIAN DIAGONALS	28.0
12" SOLID WHITE LINE					
Hook Drive (West Leg)		21	6.0	6' CROSSWALK	126.0
Drury Lane (West Leg)		21	6.0	6' CROSSWALK	126.0
381+16.8	384+09.7	13	13.3	ISLAND CHEVRONS	172.9
385+70.7	389+35.7	17	14.5	ISLAND CHEVRONS	246.5
414+38.1	414+85.1	3	7.8	ISLAND CHEVRONS	23.4
410+28.0	412+73.8	9	10.3	SHOULDER DIAGONALS	92.7
411+52.9	414+30.6	10	10.8	SHOULDER DIAGONALS	108.0
PAY CODE	LC780025			TOTAL	5054.7

9 RECESSED REFLECTIVE PAVEMENT MARKER

FROM STATION	TO STATION	LT/RT	DESCRIPTION	LENGTH (ft)	SPACING (ft)	QUANTITY (EACH)
TWO-WAY WHITE/RED						
234+05.0	239+95.5	LT	LANE LINE	591.2	40.0	15
241+43.6	257+11.9	LT	LANE LINE	1572.9	40.0	40
257+70.6	299+95.1	LT	LANE LINE	4221.3	40.0	106
301+03.0	352+90.0	LT	LANE LINE	5198.8	40.0	130
382+30.0	384+09.7	LT	LANE LINE	179.8	40.0	5
385+70.7	404+26.1	LT	LANE LINE	1848.2	40.0	47
405+54.1	414+86.8	LT	LANE LINE	916.9	40.0	23
234+05.0	239+95.5	RT	LANE LINE	589.8	40.0	15
241+43.6	281+68.9	RT	LANE LINE	4023.8	40.0	101
282+52.6	299+95.1	RT	LANE LINE	1742.6	40.0	44
301+03.0	352+90.0	RT	LANE LINE	5175.2	40.0	130
382+30.0	384+09.7	RT	LANE LINE	179.8	40.0	5
385+70.7	404+26.1	RT	LANE LINE	1863.3	40.0	47
405+43.9	410+17.2	RT	LANE LINE	482.6	40.0	13
PAY CODE	X7810300			SUBTOTAL		721
				CONTINGENCY + 5%		37
				TOTAL		758

REVISIONS / REMARKS					
NO.	DESCRIPTION	DATE	BY	SURVEYOR:	___/___
		__/__/__		DSGNR/LIAISON:	
		__/__/__		PLOTTED BY:	khdi869l 9/28/2016

MICROSURFACING 2016
ROLLINS ROAD (HOOK DRIVE TO IL 132)

LakeCounty Division of Transportation

SCHEDULE OF QUANTITIES

ROUTE	SECTION	SECTION NUMBER	SHEET	SHEETS
CH31	80	16-00080-61-RS	11	66

FILE NAME: U:\Design\Russo\16-00080-61-RS Microsurfacing 2016\CAD\16-00080-61-RS.dgn

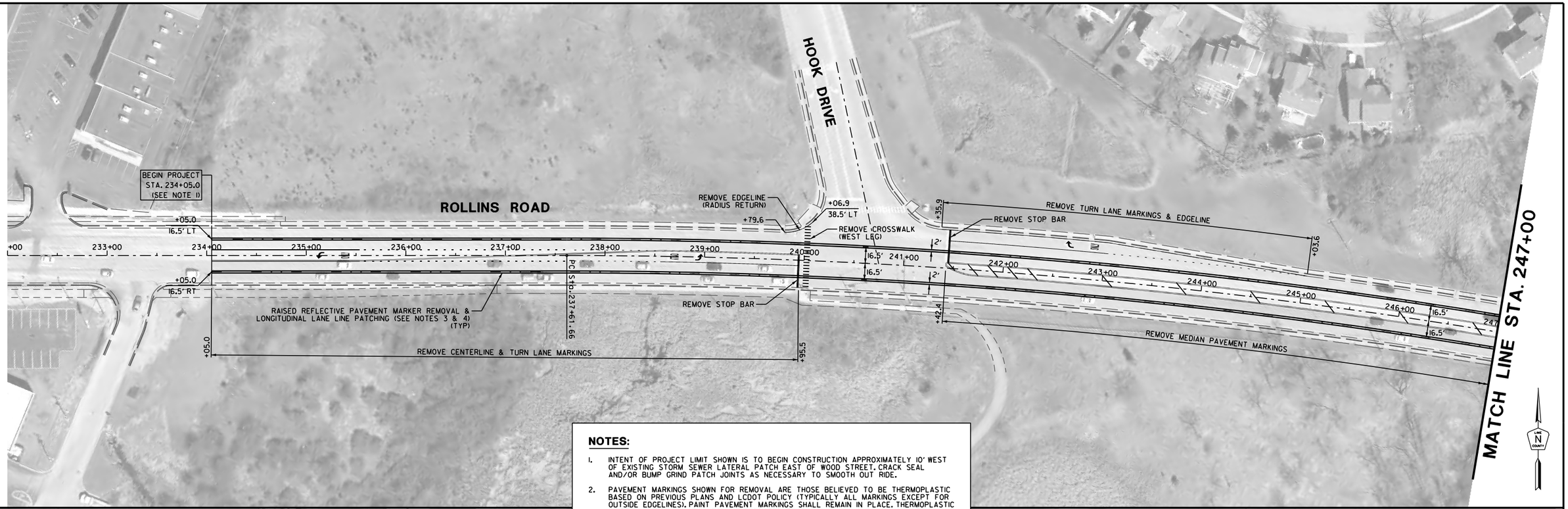

NOTES:

1. INTENT OF PROJECT LIMIT SHOWN IS TO BEGIN CONSTRUCTION APPROXIMATELY 10' WEST OF EXISTING STORM SEWER LATERAL PATCH EAST OF WOOD STREET. CRACK SEAL AND/OR BUMP GRIND PATCH JOINTS AS NECESSARY TO SMOOTH OUT RIDE.
2. PAVEMENT MARKINGS SHOWN FOR REMOVAL ARE THOSE BELIEVED TO BE THERMOPLASTIC BASED ON PREVIOUS PLANS AND LCDOT POLICY (TYPICALLY ALL MARKINGS EXCEPT FOR OUTSIDE EDGELINES). PAINT PAVEMENT MARKINGS SHALL REMAIN IN PLACE. THERMOPLASTIC WHITE SKIP/DASH LANE LINES ARE EXPECTED TO FALL WITHIN LONGITUDINAL PATCHING AREAS. THEREFORE, REMOVAL OF SKIP/DASHES WILL OCCUR AS PART OF HMA SURFACE REMOVAL DURING PATCHING, AND SHALL NOT BE PAID FOR SEPARATELY.
3. RAISED REFLECTIVE PAVEMENT MARKERS SHALL BE REMOVED. EXISTING MARKERS ARE TYPICALLY INSTALLED IN PAIRS SPACED AT 80' CENTER TO CENTER.
4. LONGITUDINAL PATCH DIMENSIONS FROM THE CENTERLINE ARE TO THE CENTER OF THE PATCH (INTENDED TO CENTER PATCH ALONG LANE LINES OF ROADWAY).

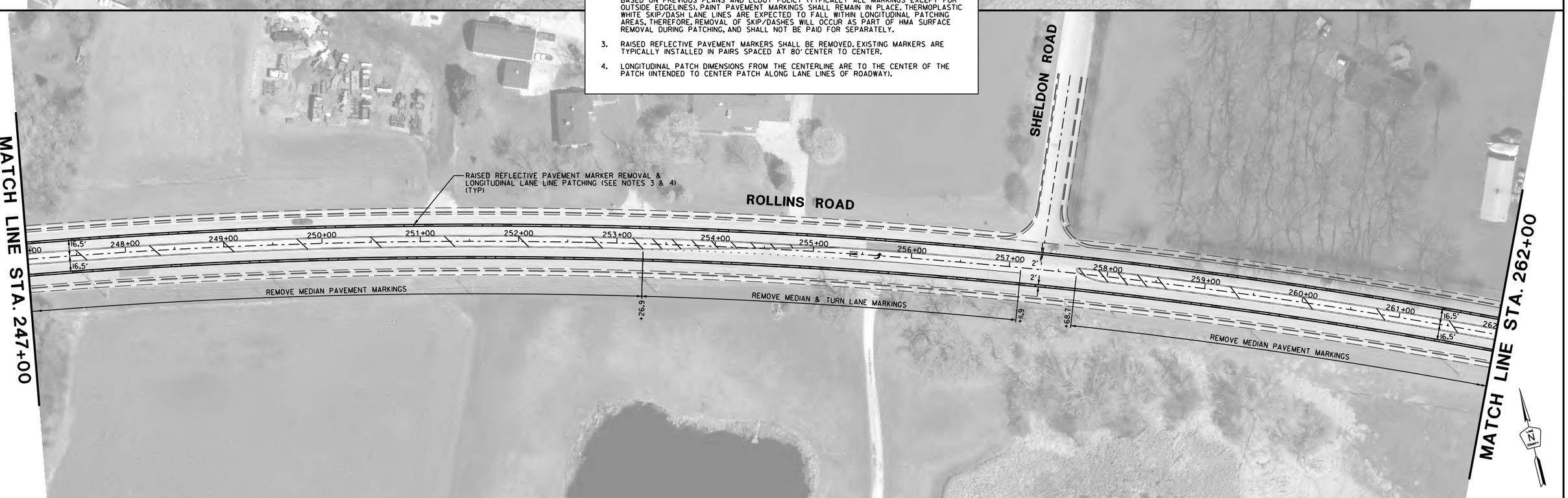

REVISIONS / REMARKS					
NO.	DESCRIPTION	DATE	BY	SURVEYOR:	___/___
		___/___/___	___	DSGNR/LIAISON:	___
		___/___/___	___	PLOTTED BY:	khdi8691 8/23/2016

SCALE
HORIZ.
0 50 100

MICROSURFACING 2016
ROLLINS ROAD (HOOK DRIVE TO IL 132)

LakeCounty
Division of Transportation

REMOVAL PLAN
STA. 234+05.0 TO 262+00.0

ROUTE	SECTION	SECTION NUMBER	SHEET	SHEETS
CH31	80	16-00080-61-RS	12	66

FILE NAME: U:\Design\Russo\16-00080-61-RS Microsurfacing 2016\CAD\16-00080-61-RS.dgn

NOTES:

1. PAVEMENT MARKINGS SHOWN FOR REMOVAL ARE THOSE BELIEVED TO BE THERMOPLASTIC BASED ON PREVIOUS PLANS AND LCDOT POLICY (TYPICALLY ALL MARKINGS EXCEPT FOR OUTSIDE EDGELINES). PAINT PAVEMENT MARKINGS SHALL REMAIN IN PLACE. THERMOPLASTIC WHITE SKIP/DASH LANE LINES ARE EXPECTED TO FALL WITHIN LONGITUDINAL PATCHING AREAS. THEREFORE, REMOVAL OF SKIP/DASHES WILL OCCUR AS PART OF HMA SURFACE REMOVAL DURING PATCHING, AND SHALL NOT BE PAID FOR SEPARATELY.
2. RAISED REFLECTIVE PAVEMENT MARKERS SHALL BE REMOVED. EXISTING MARKERS ARE TYPICALLY INSTALLED IN PAIRS SPACED AT 80' CENTER TO CENTER.
3. LONGITUDINAL PATCH DIMENSIONS FROM THE CENTERLINE ARE TO THE CENTER OF THE PATCH (INTENDED TO CENTER PATCH ALONG LANE LINES OF ROADWAY).

REVISIONS / REMARKS					
NO.	DESCRIPTION	DATE	BY	SURVEYOR:	___/___
		___/___/___	___	DSGNR/LIAISON:	___
		___/___/___	___	PLOTTED BY:	khdl8691 8/23/2016

SCALE HORIZ. 0 50 100

MICROSURFACING 2016
ROLLINS ROAD (HOOK DRIVE TO IL 132)

LakeCounty Division of Transportation

REMOVAL PLAN
STA. 262+00.0 TO 292+00.0

ROUTE	SECTION	SECTION NUMBER	SHEET	SHEETS
CH31	80	16-00080-61-RS	13	66

FILE NAME: U:\Design\Russo\16-00080-61-RS Microsurfacing 2016\CAD\16-00080-61-RS.dgn

NOTES:

1. PAVEMENT MARKINGS SHOWN FOR REMOVAL ARE THOSE BELIEVED TO BE THERMOPLASTIC BASED ON PREVIOUS PLANS AND LCDOT POLICY (TYPICALLY ALL MARKINGS EXCEPT FOR OUTSIDE EDGELINES). PAINT PAVEMENT MARKINGS SHALL REMAIN IN PLACE. THERMOPLASTIC WHITE SKIP/DASH LANE LINES ARE EXPECTED TO FALL WITHIN LONGITUDINAL PATCHING AREAS, THEREFORE, REMOVAL OF SKIP/DASHES WILL OCCUR AS PART OF HMA SURFACE REMOVAL DURING PATCHING, AND SHALL NOT BE PAID FOR SEPARATELY.
2. RAISED REFLECTIVE PAVEMENT MARKERS SHALL BE REMOVED. EXISTING MARKERS ARE TYPICALLY INSTALLED IN PAIRS SPACED AT 80' CENTER TO CENTER.
3. LONGITUDINAL PATCH DIMENSIONS FROM THE CENTERLINE ARE TO THE CENTER OF THE PATCH (INTENDED TO CENTER PATCH ALONG LANE LINES OF ROADWAY).

REVISIONS / REMARKS					
NO.	DESCRIPTION	DATE	BY	SURVEYOR:	___/___
		___/___/___	___	DSGNR/LIAISON:	___
		___/___/___	___	PLOTTED BY:	khd18691 8/23/2016

SCALE HORIZ. 0 50 100

MICROSURFACING 2016
ROLLINS ROAD (HOOK DRIVE TO IL 132)

LakeCounty Division of Transportation

REMOVAL PLAN
STA. 292+00.0 TO 322+00.0

ROUTE	SECTION	SECTION NUMBER	SHEET	SHEETS
CH31	80	16-00080-61-RS	14	66

FILE NAME: U:\Design\Russo\16-00080-61-RS Microsurfacing 2016\CAD\16-00080-61-RS.dgn

NOTES:

1. PAVEMENT MARKINGS SHOWN FOR REMOVAL ARE THOSE BELIEVED TO BE THERMOPLASTIC BASED ON PREVIOUS PLANS AND LCDOT POLICY (TYPICALLY ALL MARKINGS EXCEPT FOR OUTSIDE EDGELINES). PAINT PAVEMENT MARKINGS SHALL REMAIN IN PLACE. THERMOPLASTIC WHITE SKIP/DASH LANE LINES ARE EXPECTED TO FALL WITHIN LONGITUDINAL PATCHING AREAS, THEREFORE, REMOVAL OF SKIP/DASHES WILL OCCUR AS PART OF HMA SURFACE REMOVAL DURING PATCHING, AND SHALL NOT BE PAID FOR SEPARATELY.
2. RAISED REFLECTIVE PAVEMENT MARKERS SHALL BE REMOVED. EXISTING MARKERS ARE TYPICALLY INSTALLED IN PAIRS SPACED AT 80' CENTER TO CENTER.
3. LONGITUDINAL PATCH DIMENSIONS FROM THE CENTERLINE ARE TO THE CENTER OF THE PATCH (INTENDED TO CENTER PATCH ALONG LANE LINES OF ROADWAY).

REVISIONS / REMARKS					
NO.	DESCRIPTION	DATE	BY	SURVEYOR:	___/___
		___/___/___	___	DSGNR/LIAISON:	___/___
		___/___/___	___	PLOTTED BY:	khdl8691 8/23/2016

SCALE HORIZ. 0 50 100

MICROSURFACING 2016
ROLLINS ROAD (HOOK DRIVE TO IL 132)

LakeCounty Division of Transportation

REMOVAL PLAN
STA. 322+00.0 TO 352+00.0

ROUTE	SECTION	SECTION NUMBER	SHEET	SHEETS
CH31	80	16-00080-61-RS	15	66

FILE NAME: U:\Design\Russo\16-00080-61-RS Microsurfacing 2016\CAD\16-00080-61-RS.dgn

NOTES:

1. THE INTENT OF THE OMISSION LIMITS IS TO SKIP THE SECTION OF ROLLINS ROAD THAT HAS MORE RECENTLY BEEN RESURFACED AS PART OF THE MILLENNIUM TRAIL UNDERPASS PROJECT.
2. PAVEMENT MARKINGS SHOWN FOR REMOVAL ARE THOSE BELIEVED TO BE THERMOPLASTIC BASED ON PREVIOUS PLANS AND LCDOT POLICY (TYPICALLY ALL MARKINGS EXCEPT FOR OUTSIDE EDGELINES). PAINT PAVEMENT MARKINGS SHALL REMAIN IN PLACE. THERMOPLASTIC WHITE SKIP/DASH LANE LINES ARE EXPECTED TO FALL WITHIN LONGITUDINAL PATCHING AREAS, THEREFORE, REMOVAL OF SKIP/DASHES WILL OCCUR AS PART OF HMA SURFACE REMOVAL DURING PATCHING, AND SHALL NOT BE PAID FOR SEPARATELY.
3. RAISED REFLECTIVE PAVEMENT MARKERS SHALL BE REMOVED. EXISTING MARKERS ARE TYPICALLY INSTALLED IN PAIRS SPACED AT 80' CENTER TO CENTER. EXISTING RECESSED MARKERS WITHIN MICROSURFACING OMISSION AREA SHALL REMAIN IN PLACE.
4. LONGITUDINAL PATCH DIMENSIONS FROM THE CENTERLINE ARE TO THE CENTER OF THE PATCH (INTENDED TO CENTER PATCH ALONG LANE LINES OF ROADWAY).
5. WITHIN THE MICROSURFACING OMISSION LIMITS, GROOVES FOR GROOVED THERMOPLASTIC PAVEMENT MARKINGS SHALL BE INSTALLED TO MATCH THE LOCATIONS OF THE EXISTING PAVEMENT MARKINGS. THEREFORE, REMOVAL OF PAVEMENT MARKINGS IN THIS AREA WILL OCCUR AS PART OF GROOVING OPERATIONS, AND SHALL NOT BE PAID FOR SEPARATELY.

REVISIONS / REMARKS					
NO.	DESCRIPTION	DATE	BY	SURVEYOR:	___/___
		__/__/__		DSGNR/LIAISON:	
		__/__/__		PLOTTED BY:	khdl8691 8/23/2016

SCALE HORIZ. 0 50 100

MICROSURFACING 2016
ROLLINS ROAD (HOOK DRIVE TO IL 132)

LakeCounty Division of Transportation

REMOVAL PLAN
STA. 352+00.0 TO 382+00.0

ROUTE	SECTION	SECTION NUMBER	SHEET	SHEETS
CH31	80	16-00080-61-RS	16	66

FILE NAME: U:\Design\Russo\16-00080-61-RS Microsurfacing 2016\CAD\16-00080-61-RS.dgn

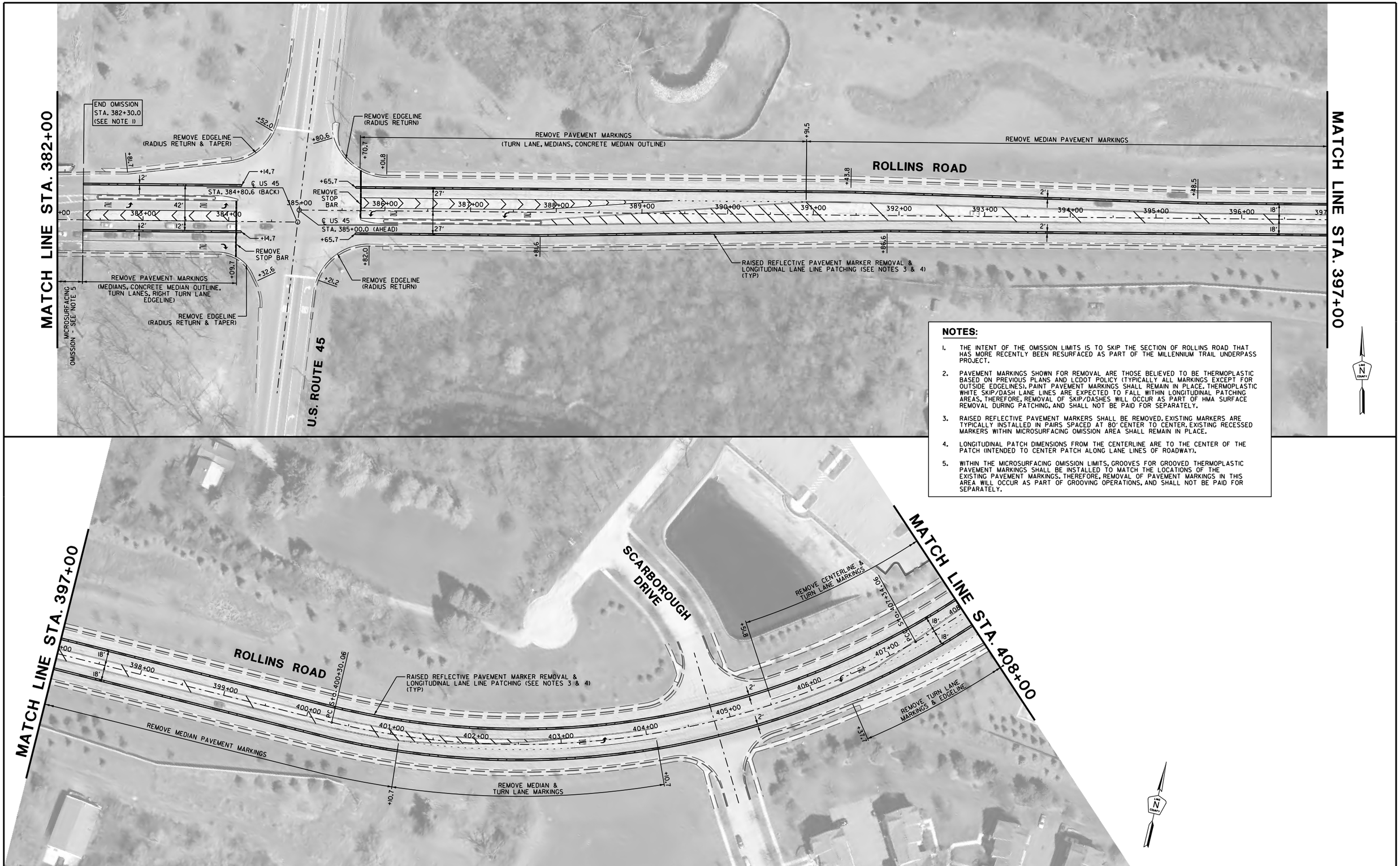

NOTES:

1. THE INTENT OF THE OMISSION LIMITS IS TO SKIP THE SECTION OF ROLLINS ROAD THAT HAS MORE RECENTLY BEEN RESURFACED AS PART OF THE MILLENNIUM TRAIL UNDERPASS PROJECT.
2. PAVEMENT MARKINGS SHOWN FOR REMOVAL ARE THOSE BELIEVED TO BE THERMOPLASTIC BASED ON PREVIOUS PLANS AND LCDOT POLICY (TYPICALLY ALL MARKINGS EXCEPT FOR OUTSIDE EDGELINES). PAINT PAVEMENT MARKINGS SHALL REMAIN IN PLACE. THERMOPLASTIC WHITE SKIP/DASH LANE LINES ARE EXPECTED TO FALL WITHIN LONGITUDINAL PATCHING AREAS, THEREFORE, REMOVAL OF SKIP/DASHES WILL OCCUR AS PART OF HMA SURFACE REMOVAL DURING PATCHING, AND SHALL NOT BE PAID FOR SEPARATELY.
3. RAISED REFLECTIVE PAVEMENT MARKERS SHALL BE REMOVED. EXISTING MARKERS ARE TYPICALLY INSTALLED IN PAIRS SPACED AT 80' CENTER TO CENTER. EXISTING RECESSED MARKERS WITHIN MICROSURFACING OMISSION AREA SHALL REMAIN IN PLACE.
4. LONGITUDINAL PATCH DIMENSIONS FROM THE CENTERLINE ARE TO THE CENTER OF THE PATCH (INTENDED TO CENTER PATCH ALONG LANE LINES OF ROADWAY).
5. WITHIN THE MICROSURFACING OMISSION LIMITS, GROOVES FOR GROOVED THERMOPLASTIC PAVEMENT MARKINGS SHALL BE INSTALLED TO MATCH THE LOCATIONS OF THE EXISTING PAVEMENT MARKINGS. THEREFORE, REMOVAL OF PAVEMENT MARKINGS IN THIS AREA WILL OCCUR AS PART OF GROOVING OPERATIONS, AND SHALL NOT BE PAID FOR SEPARATELY.

REVISIONS / REMARKS					
NO.	DESCRIPTION	DATE	BY	SURVEYOR:	___/___
		___/___/___		DSGNR/LIAISON:	
		___/___/___		PLOTTED BY: khdl8691 8/23/2016	

SCALE
HORIZ.
0 50 100

MICROSURFACING 2016
ROLLINS ROAD (HOOK DRIVE TO IL 132)

LakeCounty
Division of Transportation

REMOVAL PLAN
STA. 382+00.0 TO 408+00.0

ROUTE	SECTION	SECTION NUMBER	SHEET	SHEETS
CH31	80	16-00080-61-RS	17	66

FILE NAME: U:\Design\Russo\16-00080-61-RS Microsurfacing 2016\CAD\16-00080-61-RS.dgn

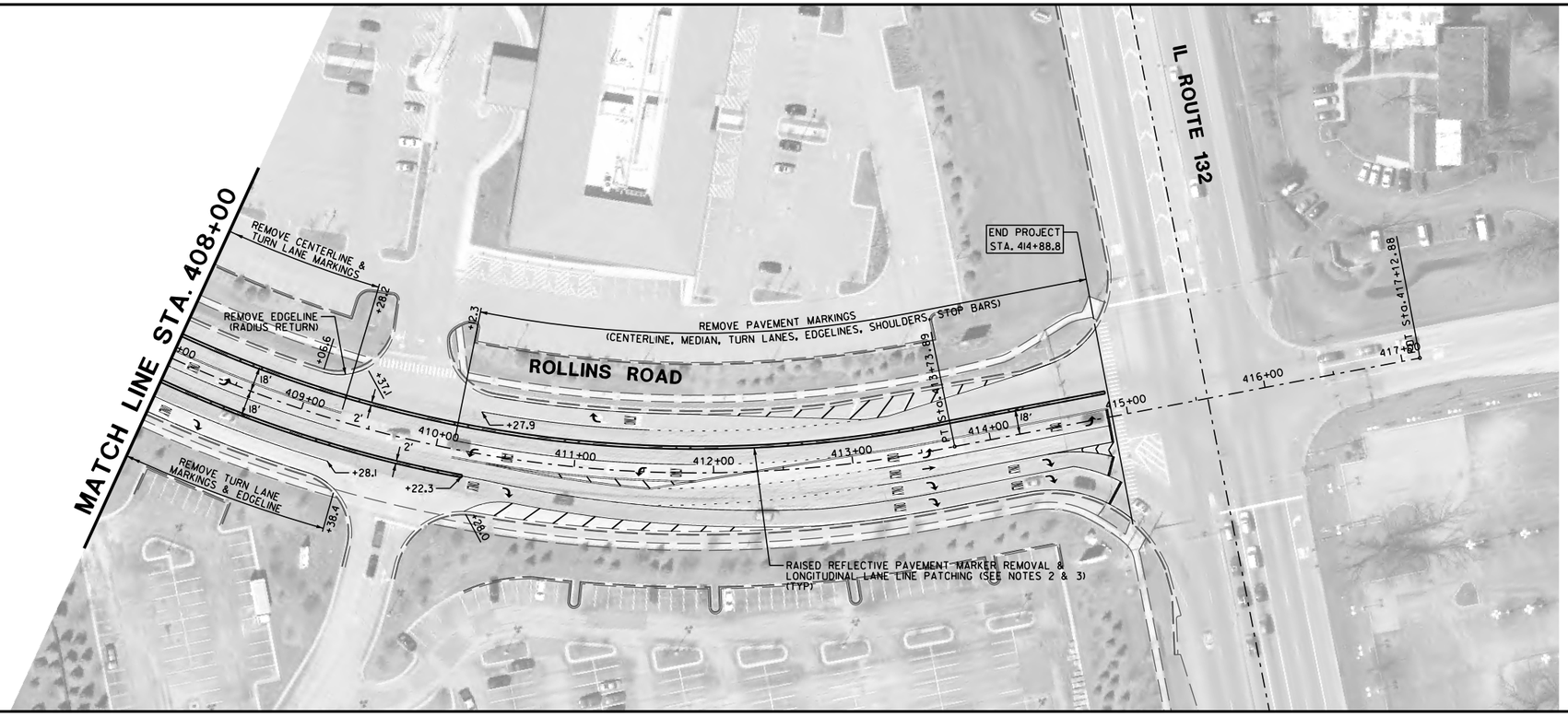

NOTES:

1. PAVEMENT MARKINGS SHOWN FOR REMOVAL ARE THOSE BELIEVED TO BE THERMOPLASTIC BASED ON PREVIOUS PLANS AND LCDOT POLICY (TYPICALLY ALL MARKINGS EXCEPT FOR OUTSIDE EDGELINES). PAINT PAVEMENT MARKINGS SHALL REMAIN IN PLACE. THERMOPLASTIC WHITE SKIP/DASH LANE LINES ARE EXPECTED TO FALL WITHIN LONGITUDINAL PATCHING AREAS. THEREFORE, REMOVAL OF SKIP/DASHES WILL OCCUR AS PART OF HMA SURFACE REMOVAL DURING PATCHING, AND SHALL NOT BE PAID FOR SEPARATELY.
2. RAISED REFLECTIVE PAVEMENT MARKERS SHALL BE REMOVED. EXISTING MARKERS ARE TYPICALLY INSTALLED IN PAIRS SPACED AT 80' CENTER TO CENTER.
3. LONGITUDINAL PATCH DIMENSIONS FROM THE CENTERLINE ARE TO THE CENTER OF THE PATCH (INTENDED TO CENTER PATCH ALONG LANE LINES OF ROADWAY).

REVISIONS / REMARKS					
NO.	DESCRIPTION	DATE	BY	SURVEYOR:	___/___
		__/__/__		DSGNR/LIAISON:	
		__/__/__		PLOTTED BY:	khdi8691 8/23/2016

SCALE HORIZ. 0 50 100

MICROSURFACING 2016
ROLLINS ROAD (HOOK DRIVE TO IL 132)

LakeCounty Division of Transportation

REMOVAL PLAN
STA. 408+00.0 TO 414+88.8

ROUTE	SECTION	SECTION NUMBER	SHEET	SHEETS
CH31	80	16-00080-61-RS	18	66

FILE NAME: U:\Design\Russo\16-00080-61-RS Microsurfacing 2016\CAD\16-00080-61-RS.dgn

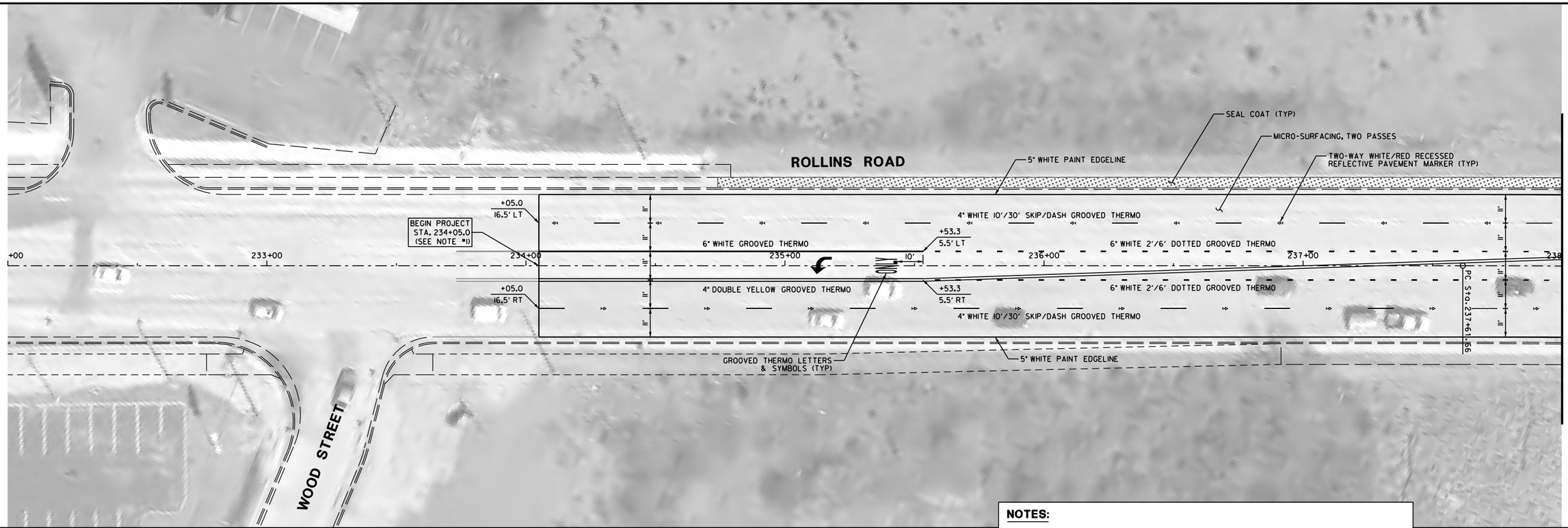

NOTES:

1. INTENT OF PROJECT LIMIT SHOWN IS TO BEGIN CONSTRUCTION APPROXIMATELY 10' WEST OF EXISTING STORM SEWER LATERAL PATCH EAST OF WOOD STREET.

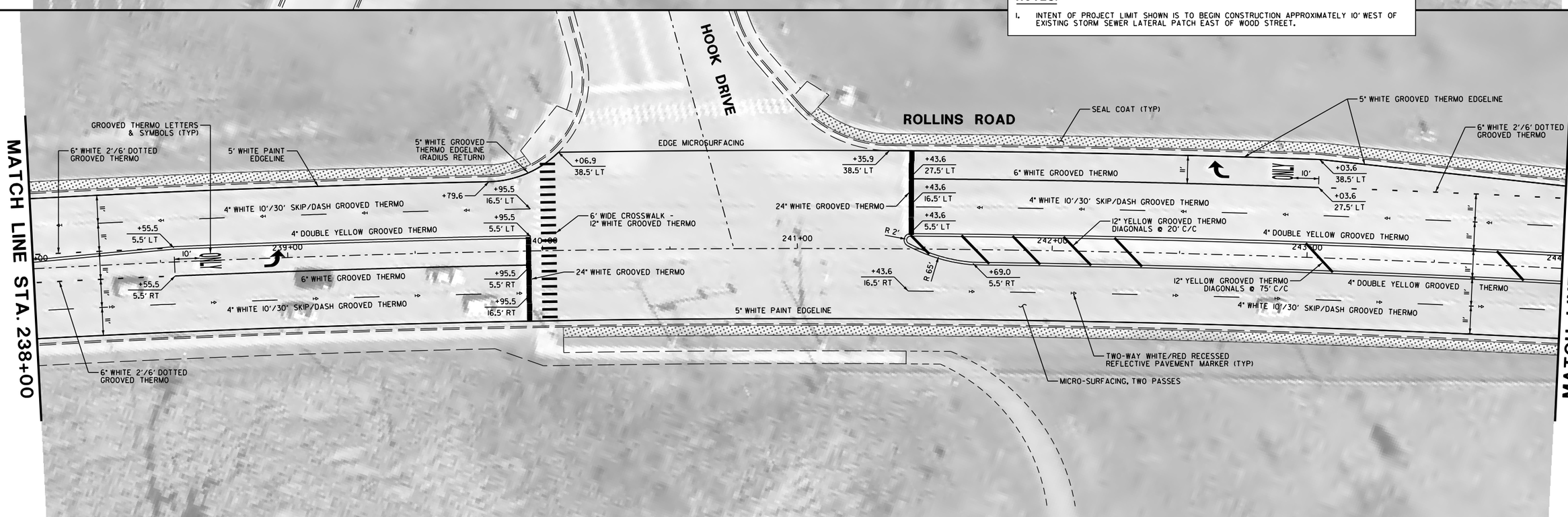

REVISIONS / REMARKS					
NO.	DESCRIPTION	DATE	BY	SURVEYOR:	___/___
		___/___/___		DSGNR/LIAISON:	
		___/___/___		PLOTTED BY: khdl8691 8/23/2016	

SCALE HORIZ. 0 20 40

MICROSURFACING 2016
ROLLINS ROAD (HOOK DRIVE TO IL 132)

LakeCounty Division of Transportation

PLAN SHEET
STA. 234+05.0 TO 244+00.0

ROUTE	SECTION	SECTION NUMBER	SHEET	SHEETS
CH31	80	16-00080-61-RS	19	66

FILE NAME: U:\Design\Russo\16-00080-61-RS Microsurfacing 2016\CAD\16-00080-61-RS.dgn

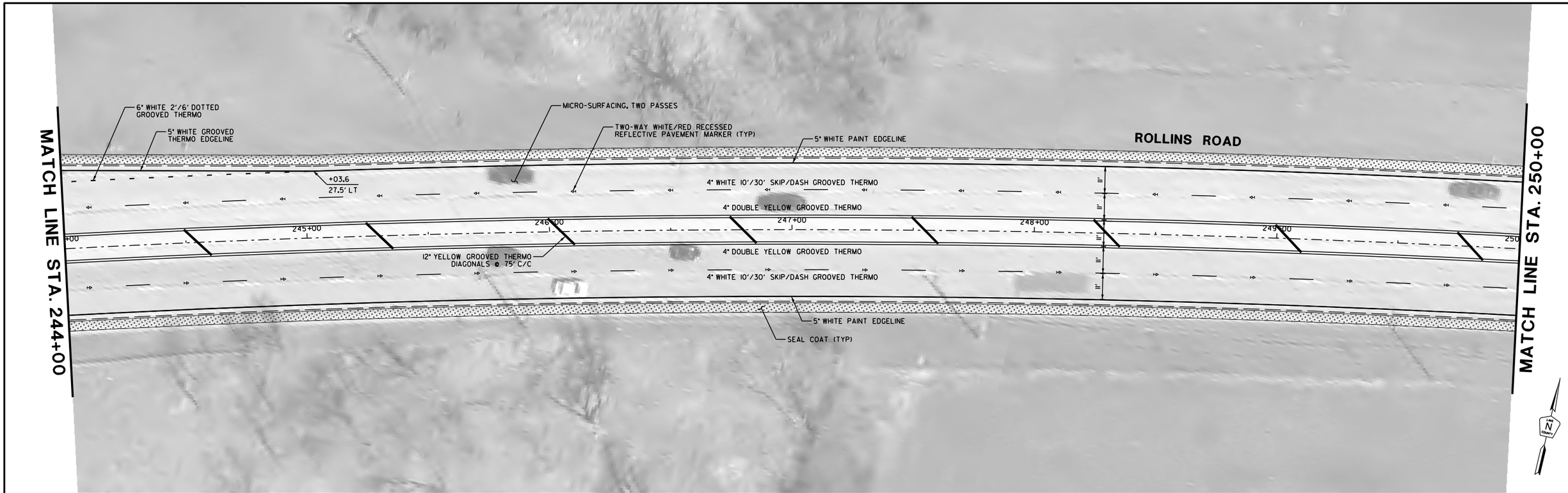

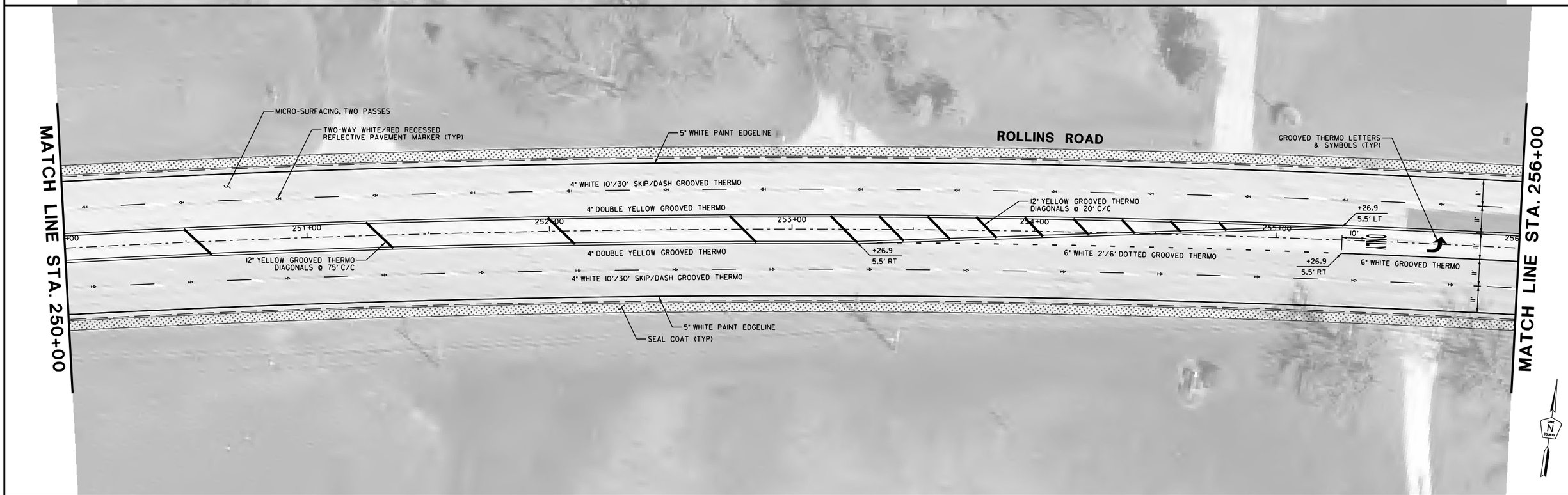

REVISIONS / REMARKS					
NO.	DESCRIPTION	DATE	BY	SURVEYOR:	___/___
		___/___/___		DSGNR/LIAISON:	___/___
		___/___/___		PLOTTED BY:	khdi8691 8/23/2016

SCALE HORIZ. 0 20 40

MICROSURFACING 2016
ROLLINS ROAD (HOOK DRIVE TO IL 132)

LakeCounty Division of Transportation

PLAN SHEET
STA. 244+00.0 TO 256+00.0

ROUTE	SECTION	SECTION NUMBER	SHEET	SHEETS
CH31	80	16-00080-61-RS	20	66

FILE NAME: U:\Design\Russo\16-00080-61-RS Microsurfacing 2016\CAD\16-00080-61-RS.dgn

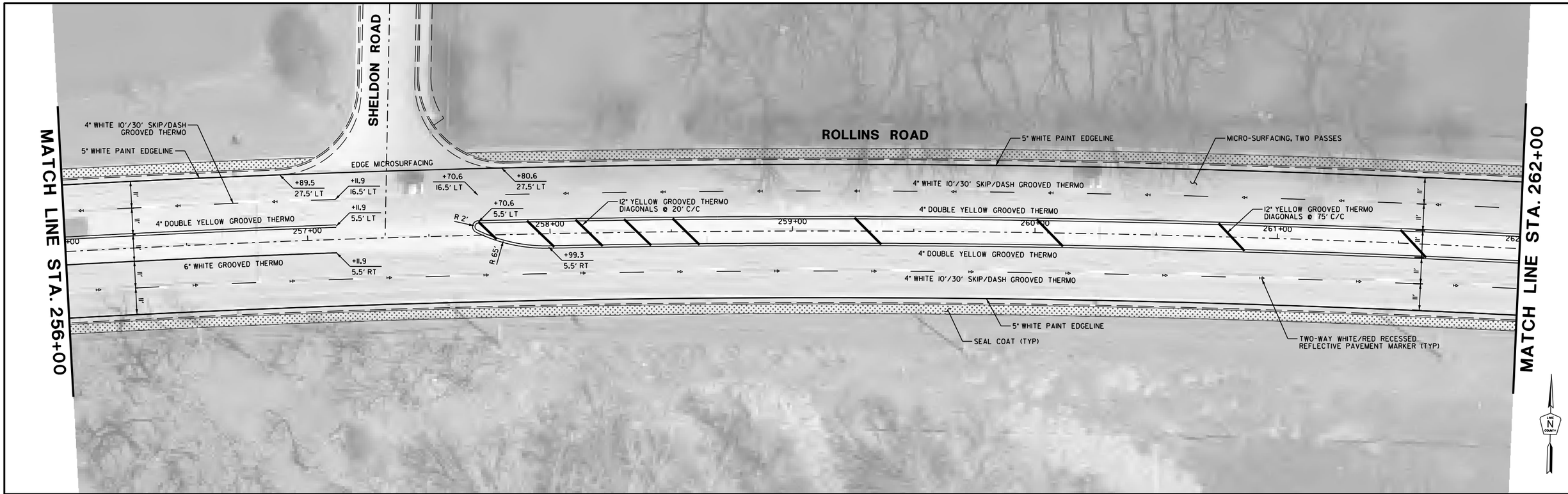

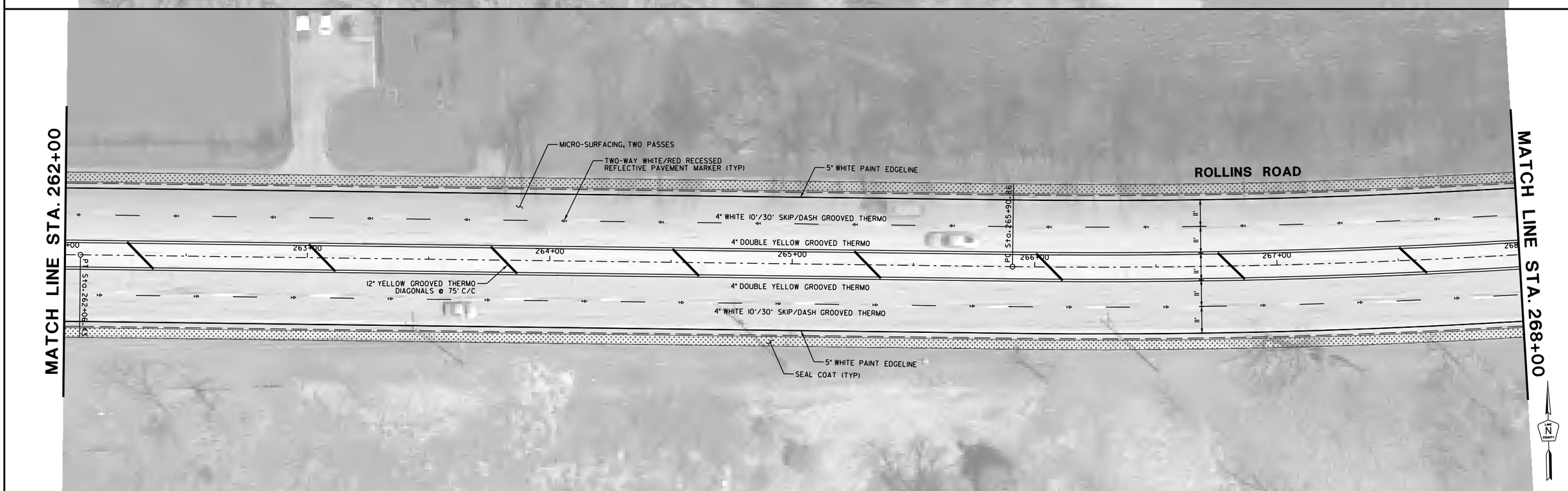

REVISIONS / REMARKS					
NO.	DESCRIPTION	DATE	BY	SURVEYOR:	___/___
		___/___/___		DSGNR/LIAISON:	
		___/___/___		PLOTTED BY:	khdl8691 8/23/2016

SCALE
HORIZ.
0 20 40

MICROSURFACING 2016
ROLLINS ROAD (HOOK DRIVE TO IL 132)

LakeCounty
Division of Transportation

PLAN SHEET
STA. 256+00.00 TO 268+00.00

ROUTE	SECTION	SECTION NUMBER	SHEET	SHEETS
CH31	80	16-00080-61-RS	21	66

FILE NAME: U:\Design\Russo\16-00080-61-RS Microsurfacing 2016\CAD\16-00080-61-RS.dgn

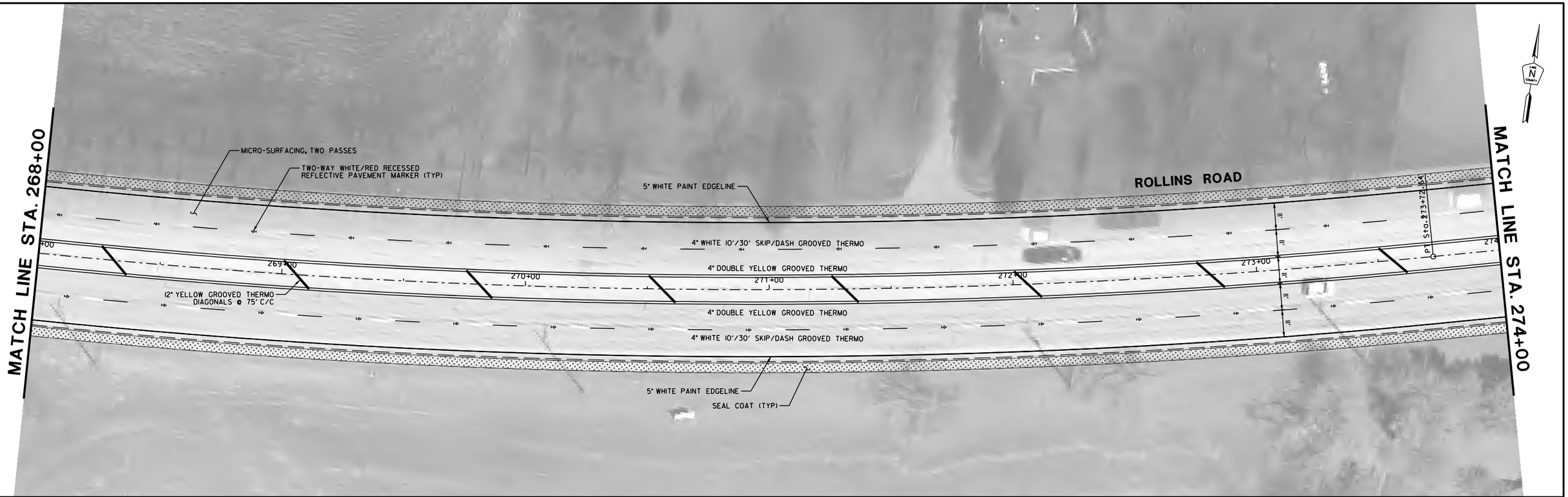

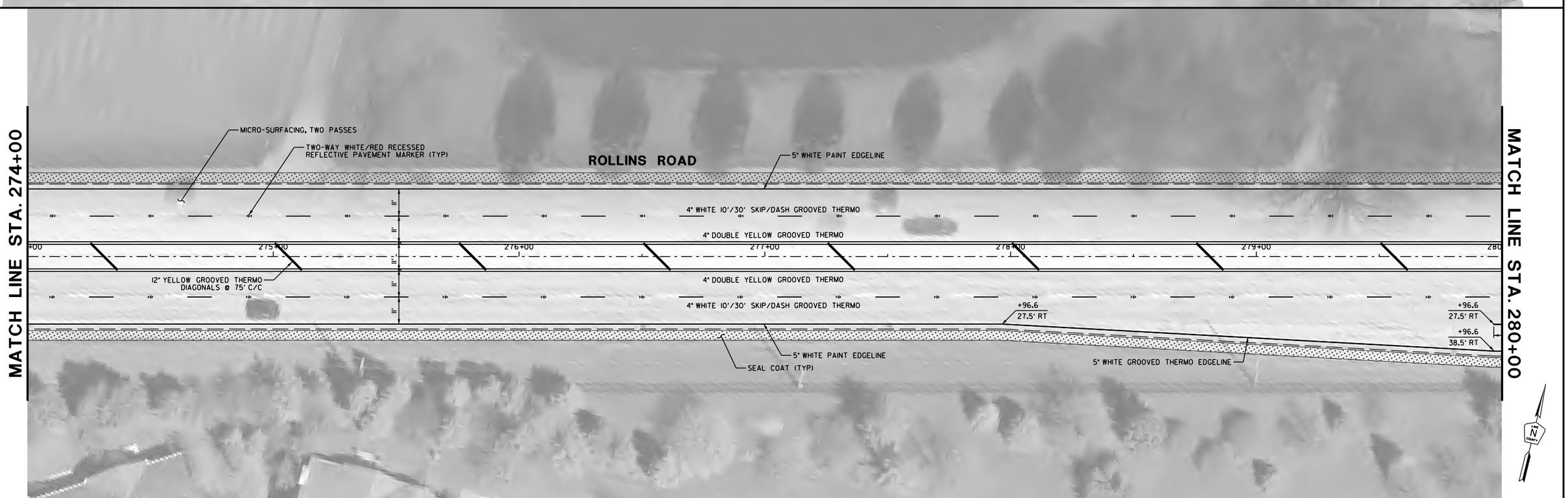

REVISIONS / REMARKS					
NO.	DESCRIPTION	DATE	BY	SURVEYOR:	___/___
				DSGNR/LIAISON:	
		___/___/___		PLOTTED BY: xhdl8691 8/23/2016	

SCALE HORIZ. 0 20 40

MICROSURFACING 2016
ROLLINS ROAD (HOOK DRIVE TO IL 132)

LakeCounty Division of Transportation

PLAN SHEET
STA. 268+00.0 TO 280+00.0

ROUTE	SECTION	SECTION NUMBER	SHEET	SHEETS
CH31	80	16-00080-61-RS	22	66

FILE NAME: U:\Design\Russo\16-00080-61-RS Microsurfacing 2016\CAD\16-00080-61-RS.dgn

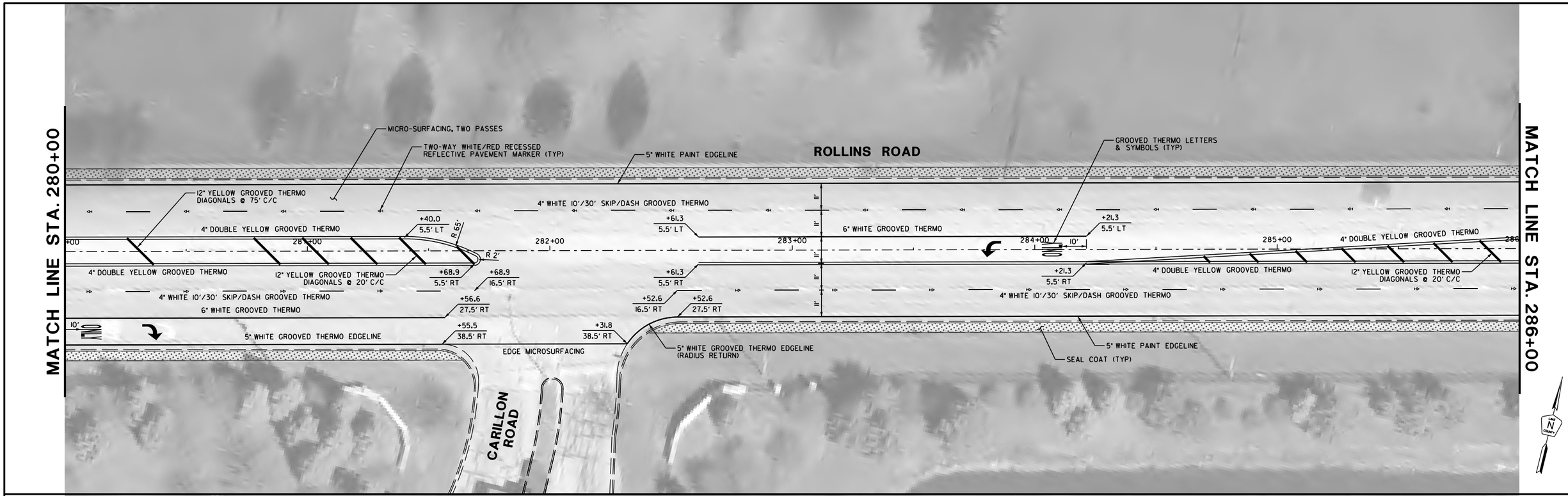

REVISIONS / REMARKS					
NO.	DESCRIPTION	DATE	BY	SURVEYOR:	___/___
		__/__/__		DSGNR/LIAISON:	___/___
		__/__/__		PLOTTED BY:	khdl869l 8/23/2016

SCALE HORIZ. 0 20 40

MICROSURFACING 2016
ROLLINS ROAD (HOOK DRIVE TO IL 132)

LakeCounty Division of Transportation

PLAN SHEET
STA. 280+00.0 TO 292+00.0

ROUTE	SECTION	SECTION NUMBER	SHEET	SHEETS
CH31	80	16-00080-61-RS	23	66

FILE NAME: U:\Design\Russo\16-00080-61-RS Microsurfacing 2016\CAD\16-00080-61-RS.dgn

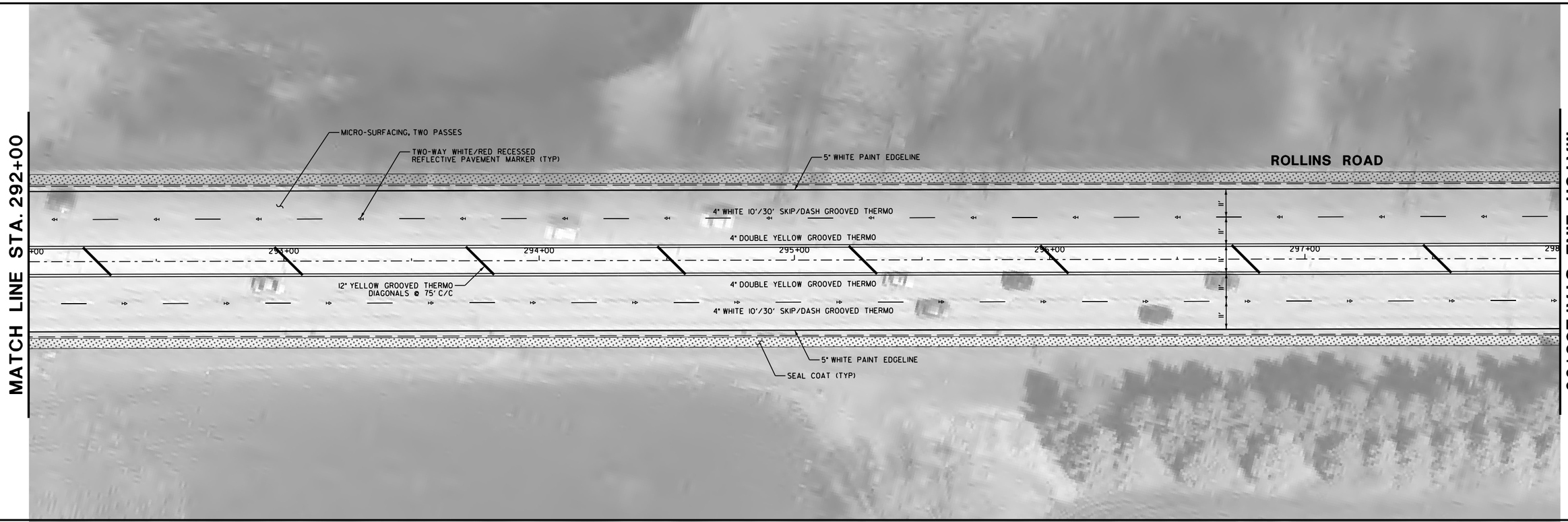

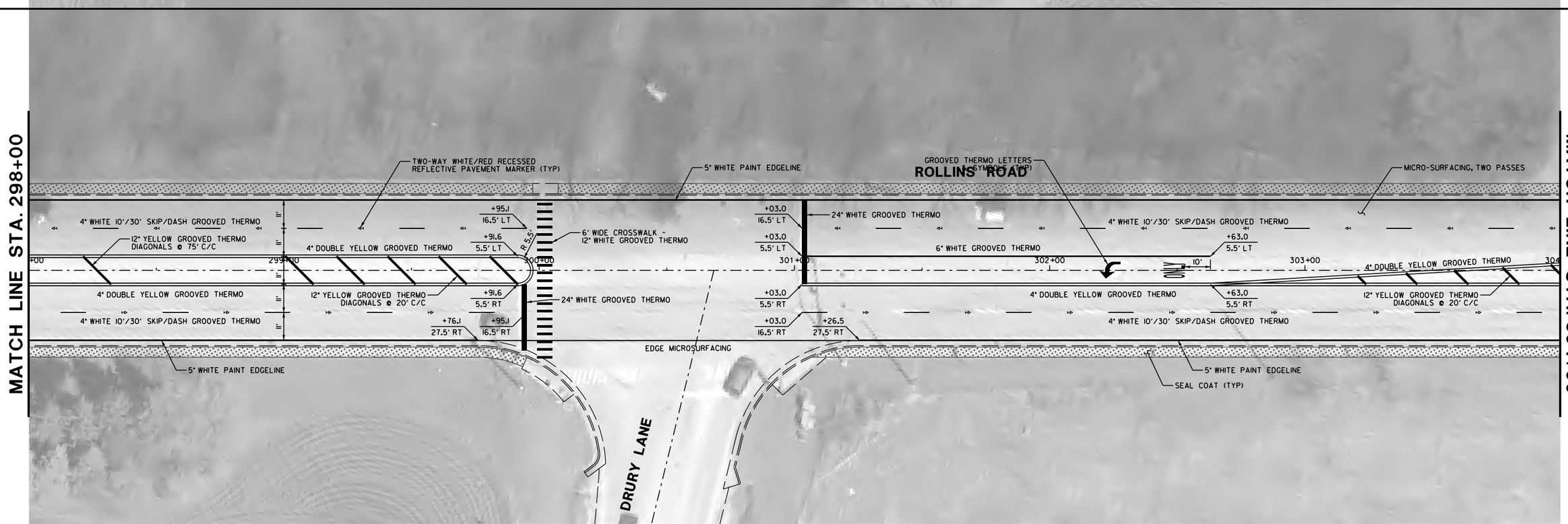

REVISIONS / REMARKS					
NO.	DESCRIPTION	DATE	BY	SURVEYOR:	___/___
		__/__/__		DSGNR/LIAISON:	___/___
		__/__/__		PLOTTED BY: khdl869l 8/23/2016	

SCALE HORIZ. 0 20 40

MICROSURFACING 2016
ROLLINS ROAD (HOOK DRIVE TO IL 132)

LakeCounty Division of Transportation

PLAN SHEET
STA. 292+00.0 TO 304+00.0

ROUTE	SECTION	SECTION NUMBER	SHEET	SHEETS
CH31	80	16-00080-61-RS	24	66

FILE NAME: U:\Design\Russo\16-00080-61-RS Microsurfacing 2016\CAD\16-00080-61-RS.dgn

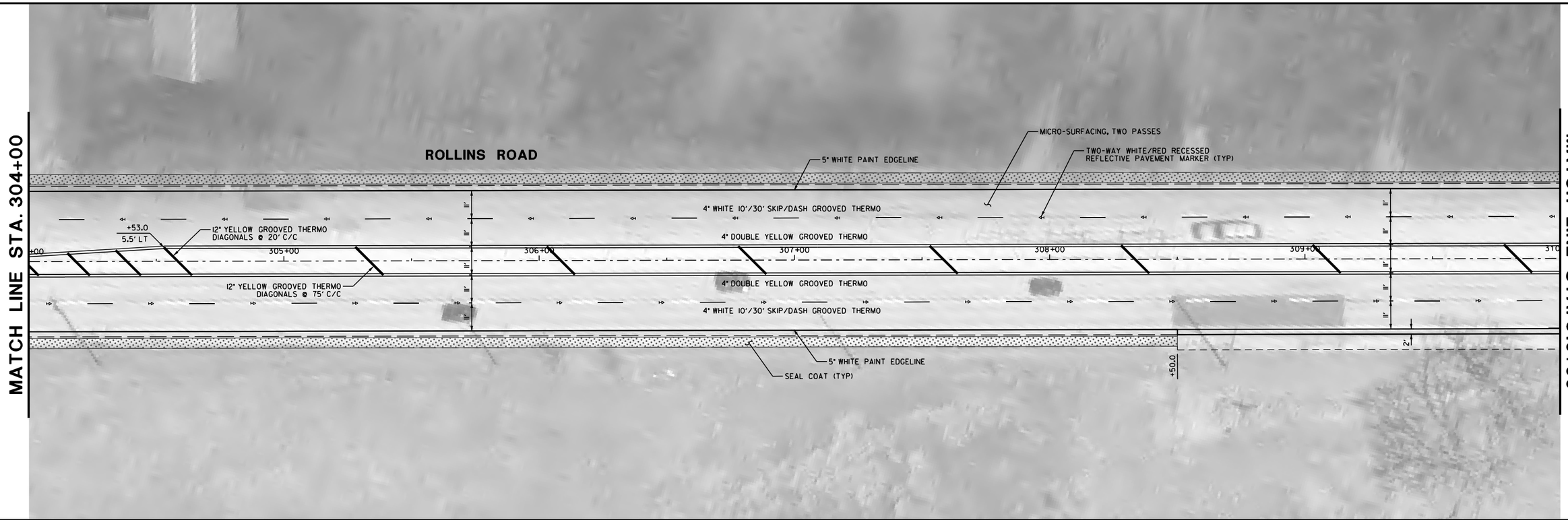

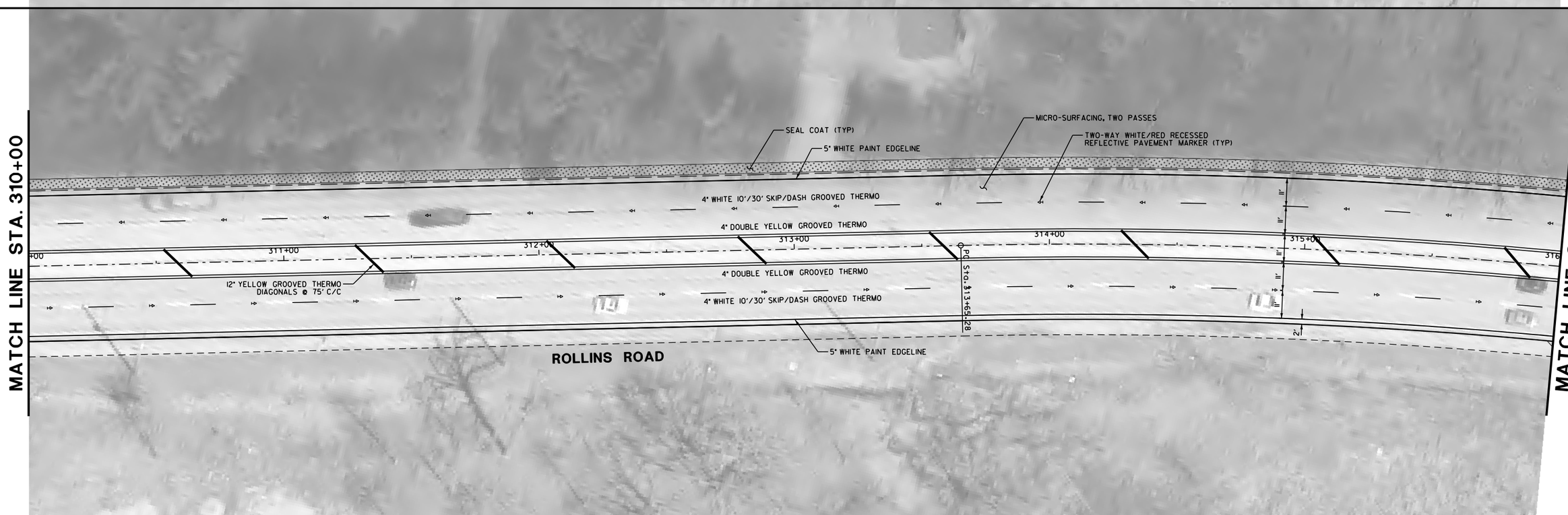

REVISIONS / REMARKS					
NO.	DESCRIPTION	DATE	BY	SURVEYOR:	___/___
		___/___/___		DSGNR/LIAISON:	
		___/___/___		PLOTTED BY:	khdl8691 8/23/2016

SCALE
HORIZ.
0 20 40

MICROSURFACING 2016
ROLLINS ROAD (HOOK DRIVE TO IL 132)

LakeCounty
Division of Transportation

PLAN SHEET
STA. 304+00.0 TO 316+00.0

ROUTE	SECTION	SECTION NUMBER	SHEET	SHEETS
CH31	80	16-00080-61-RS	25	66

FILE NAME: U:\Design\Russo\16-00080-61-RS Microsurfacing 2016\CAD\16-00080-61-RS.dgn

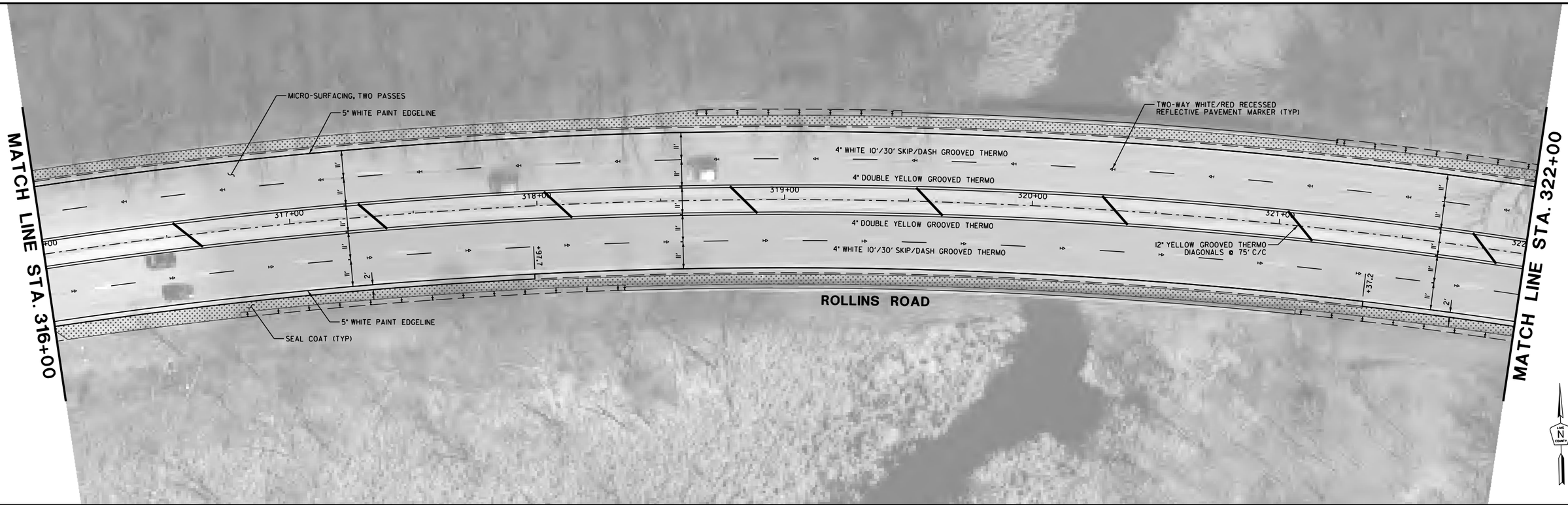

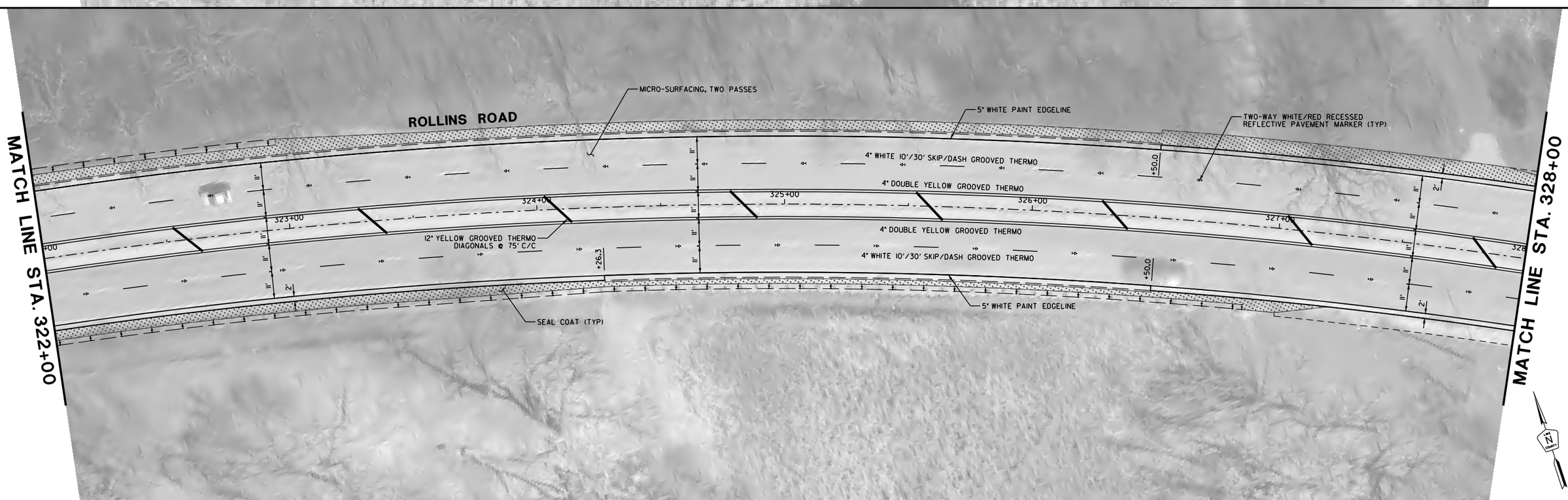

REVISIONS / REMARKS					
NO.	DESCRIPTION	DATE	BY	SURVEYOR:	___/___
		___/___/___		DSGNR/LIAISON:	
		___/___/___		PLOTTED BY: khdl8691 8/23/2016	

SCALE HORIZ. 0 20 40

MICROSURFACING 2016
ROLLINS ROAD (HOOK DRIVE TO IL 132)

LakeCounty Division of Transportation

PLAN SHEET
STA. 316+00.0 TO 328+00.0

ROUTE	SECTION	SECTION NUMBER	SHEET	SHEETS
CH31	80	16-00080-61-RS	26	66

FILE NAME: U:\Design\Russo\16-00080-61-RS Microsurfacing 2016\CAD\16-00080-61-RS.dgn

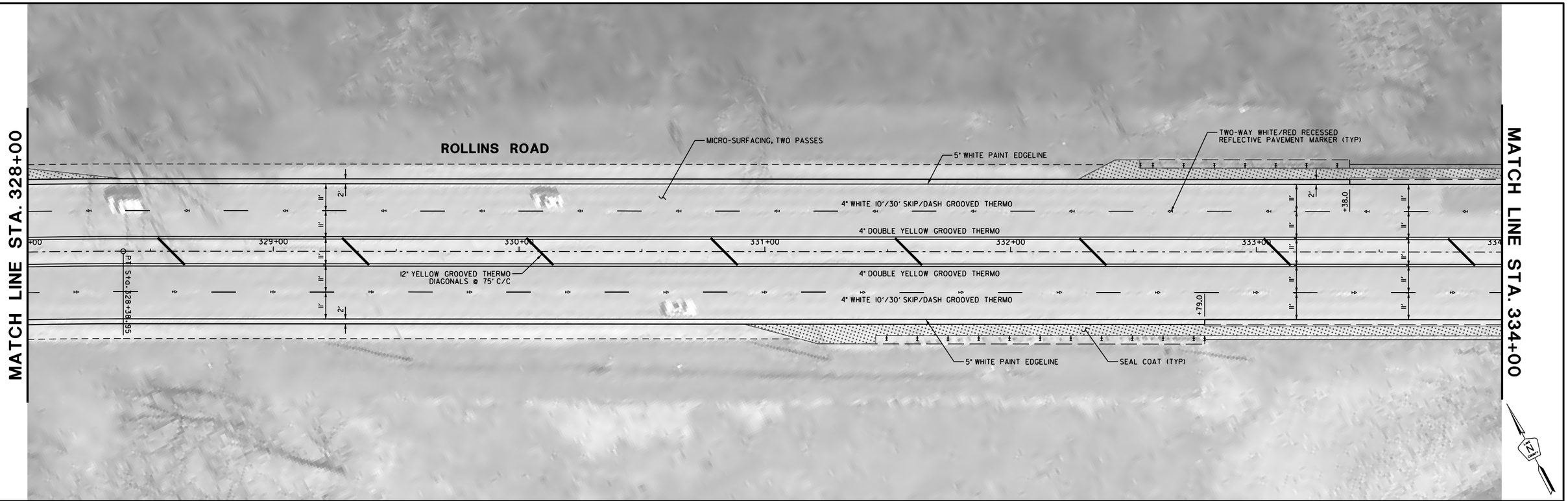

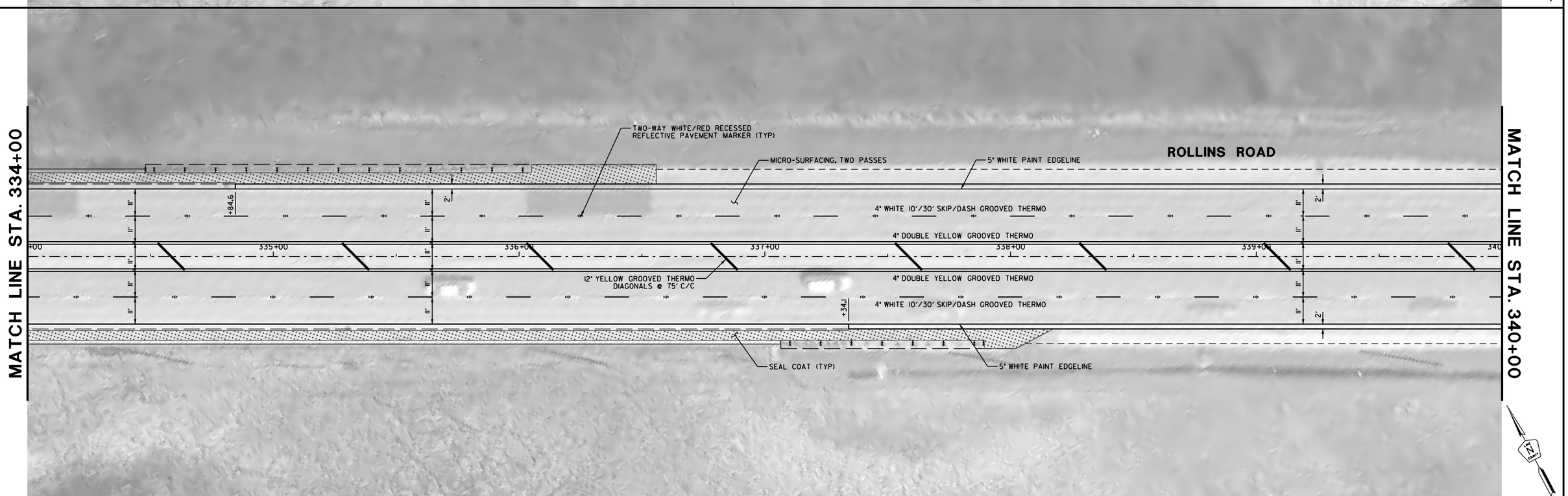

REVISIONS / REMARKS					
NO.	DESCRIPTION	DATE	BY	SURVEYOR:	___/___
		___/___/___		DSGNR/LIAISON:	
		___/___/___		PLOTTED BY: xhdl8691 8/23/2016	

SCALE HORIZ. 0 20 40

MICROSURFACING 2016
ROLLINS ROAD (HOOK DRIVE TO IL 132)

LakeCounty Division of Transportation

PLAN SHEET
STA. 328+0.00 TO 340+00.0

ROUTE	SECTION	SECTION NUMBER	SHEET	SHEETS
CH31	80	16-00080-61-RS	27	66

FILE NAME: U:\Design\Russo\16-00080-61-RS Microsurfacing 2016\CAD\16-00080-61-RS.dgn

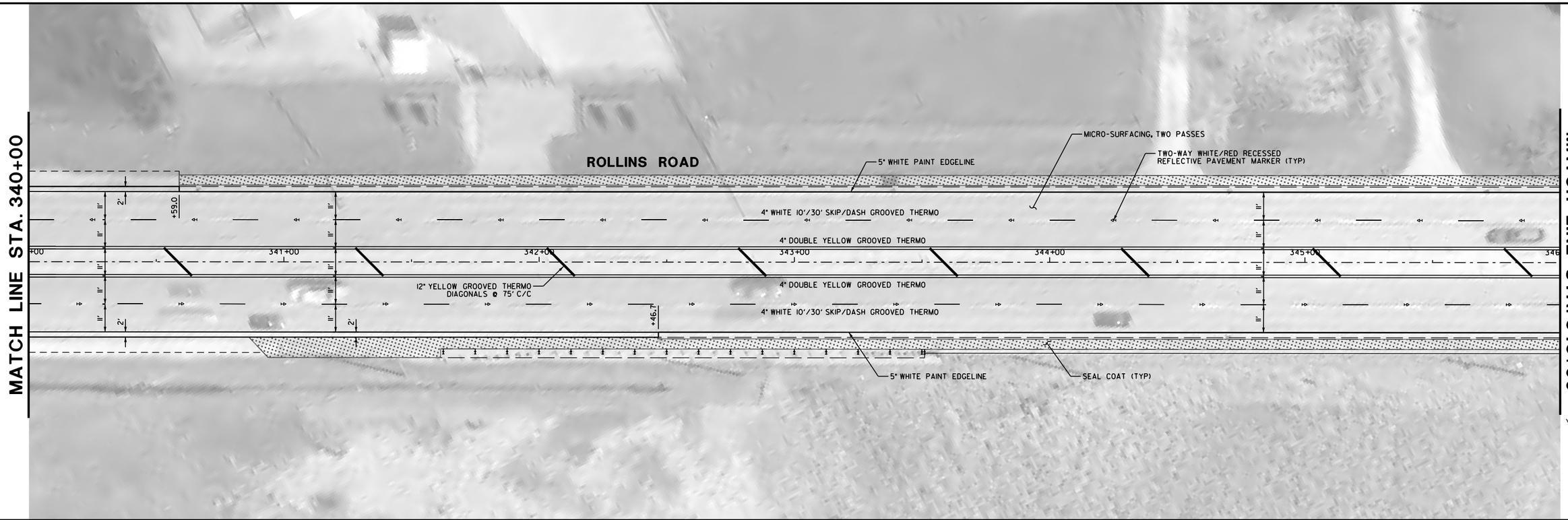

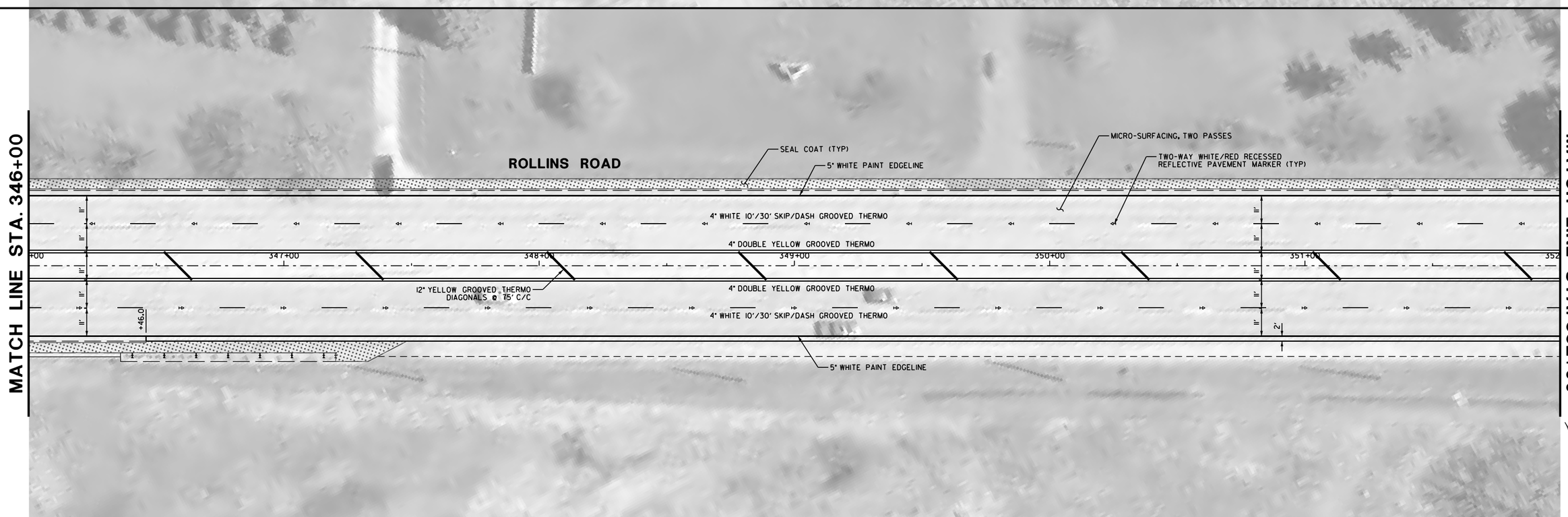

REVISIONS / REMARKS					
NO.	DESCRIPTION	DATE	BY	SURVEYOR:	___/___
				DSGNR/LIAISON:	
				PLOTTED BY:	khdl8691 8/23/2016

SCALE
HORIZ.
0 20 40

MICROSURFACING 2016
ROLLINS ROAD (HOOK DRIVE TO IL 132)

LakeCounty
Division of Transportation

PLAN SHEET
STA. 340+00.0 TO 352+00.0

ROUTE	SECTION	SECTION NUMBER	SHEET	SHEETS
CH31	80	16-00080-61-RS	28	66

FILE NAME: U:\Design\Russo\16-00080-61-RS Microsurfacing 2016\CAD\16-00080-61-RS.dgn

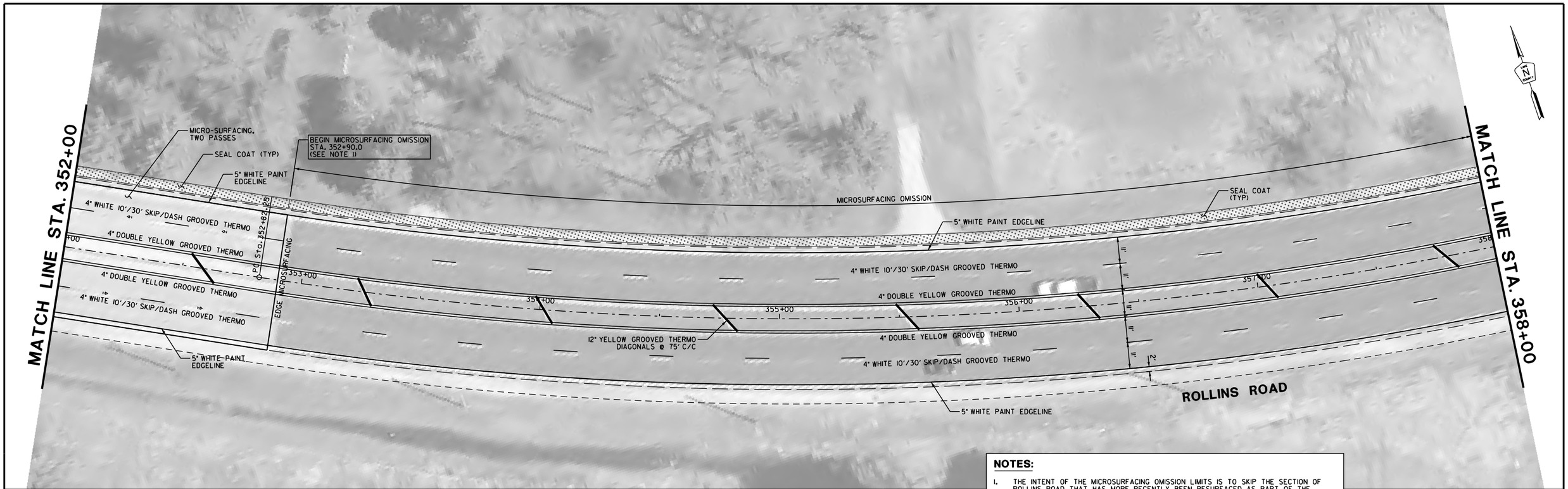

NOTES:

1. THE INTENT OF THE MICROSURFACING OMISSION LIMITS IS TO SKIP THE SECTION OF ROLLINS ROAD THAT HAS MORE RECENTLY BEEN RESURFACED AS PART OF THE MILLENNIUM TRAIL UNDERPASS PROJECT.
2. WITHIN THE MICROSURFACING OMISSION LIMITS, GROOVES FOR GROOVED THERMOPLASTIC PAVEMENT MARKINGS SHALL BE INSTALLED TO MATCH THE LOCATIONS OF THE EXISTING PAVEMENT MARKINGS.

REVISIONS / REMARKS					
NO.	DESCRIPTION	DATE	BY	SURVEYOR:	___/___
				DSGNR/LIAISON:	___/___
				PLOTTED BY: khdl8691 8/24/2016	

SCALE HORIZ. 0 20 40

MICROSURFACING 2016
ROLLINS ROAD (HOOK DRIVE TO IL 132)

LakeCounty Division of Transportation

PLAN SHEET
STA. 352+00.0 TO 364+00.0

ROUTE	SECTION	SECTION NUMBER	SHEET	SHEETS
CH31	80	16-00080-61-RS	29	66

FILE NAME: U:\Design\Russo\16-00080-61-RS Microsurfacing 2016\CAD\16-00080-61-RS.dgn

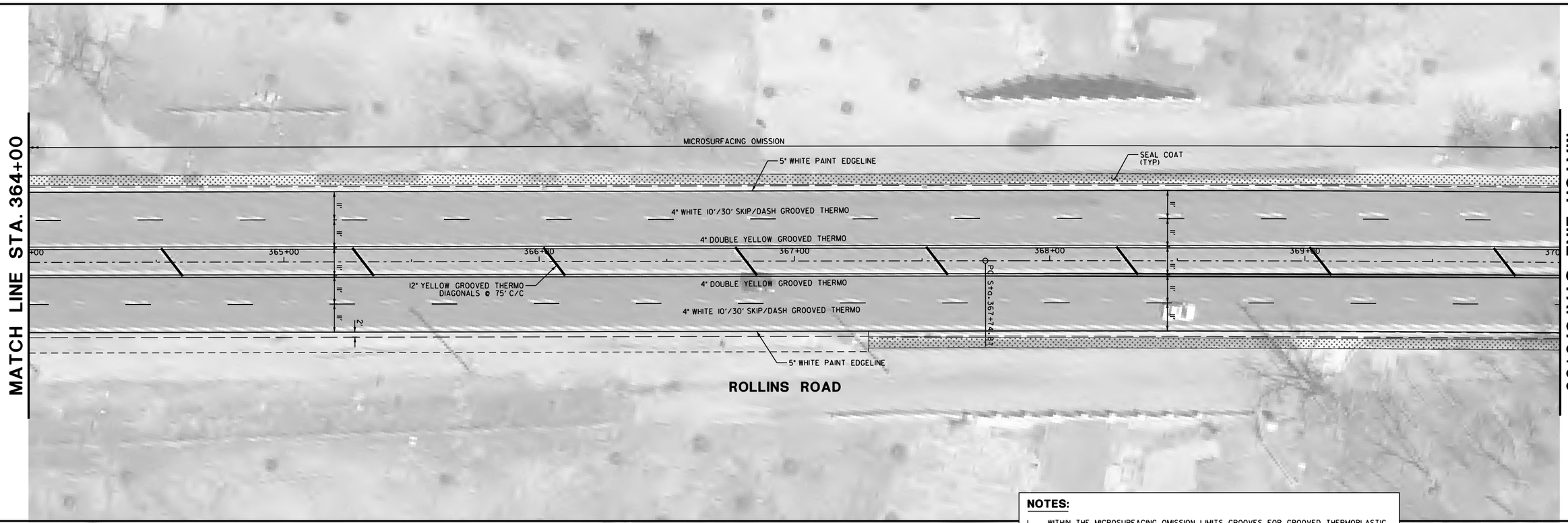

NOTES:

1. WITHIN THE MICROSURFACING OMISSION LIMITS, GROOVES FOR GROOVED THERMOPLASTIC PAVEMENT MARKINGS SHALL BE INSTALLED TO MATCH THE LOCATIONS OF THE EXISTING PAVEMENT MARKINGS.

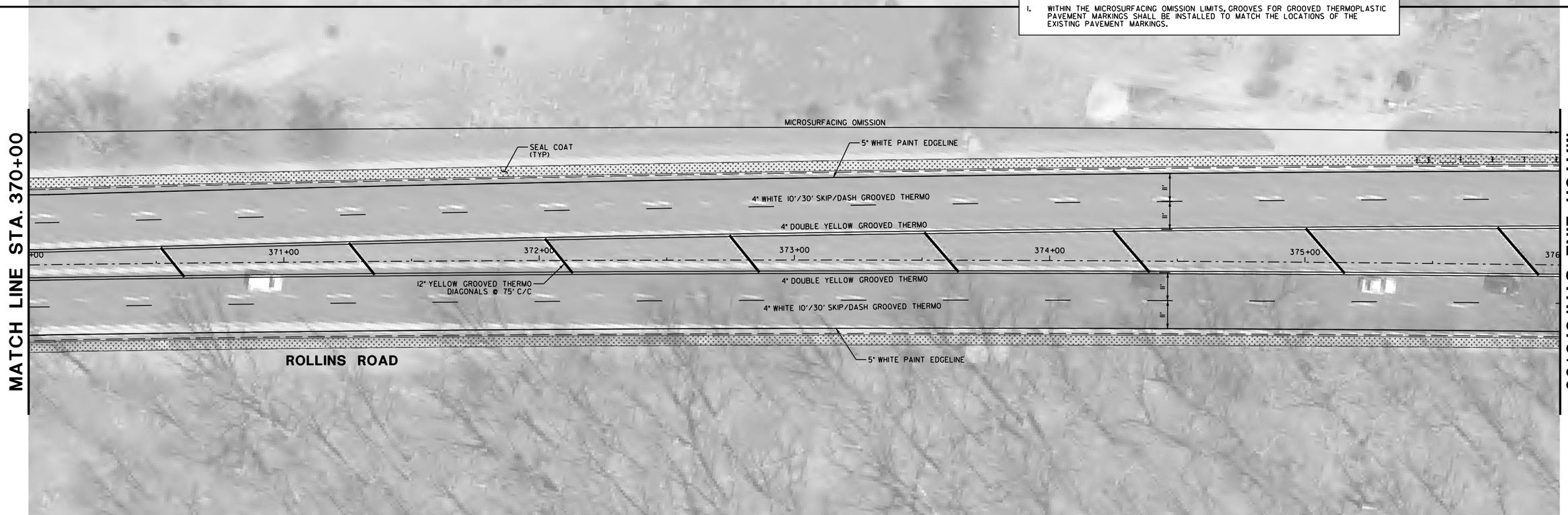

REVISIONS / REMARKS					
NO.	DESCRIPTION	DATE	BY	SURVEYOR:	___/___
		___/___/___	___	DSGNR/LIAISON:	___
		___/___/___	___	PLOTTED BY:	khdl8691 8/24/2016

SCALE HORIZ. 0 20 40

MICROSURFACING 2016
ROLLINS ROAD (HOOK DRIVE TO IL 132)

LakeCounty Division of Transportation

PLAN SHEET
STA. 364+00.0 TO 376+00.0

ROUTE	SECTION	SECTION NUMBER	SHEET	SHEETS
CH31	80	16-00080-61-RS	30	66

FILE NAME: U:\Design\Russo\16-00080-61-RS Microsurfacing 2016\CAD\16-00080-61-RS.dgn

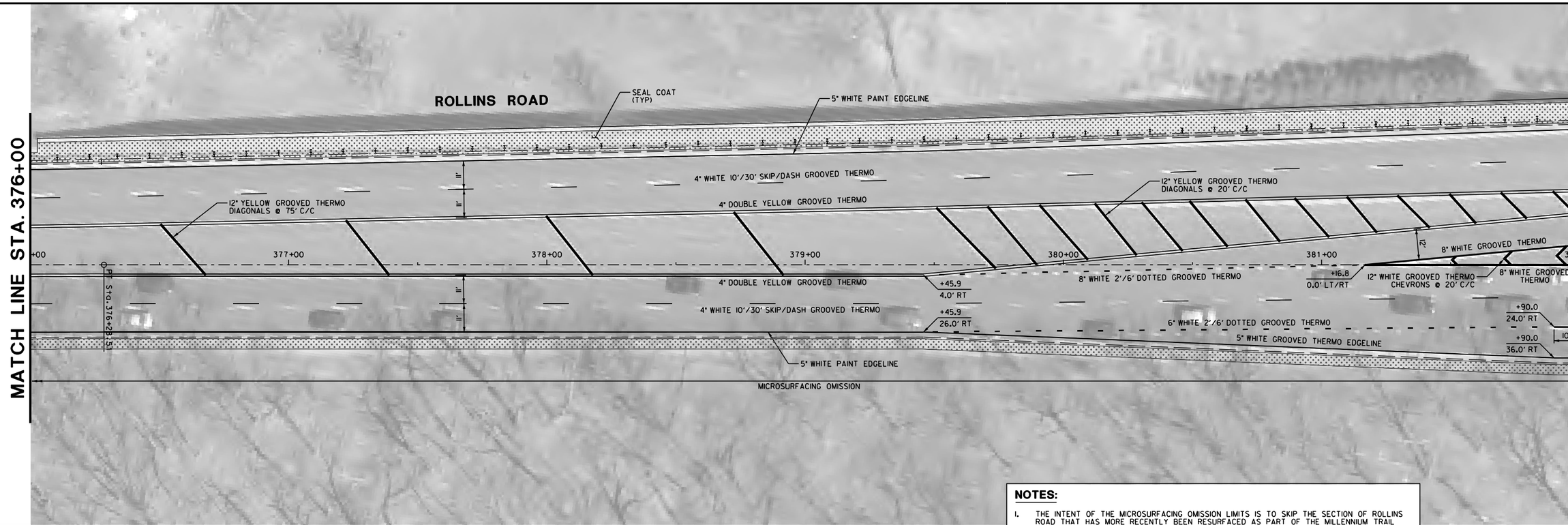

NOTES:

1. THE INTENT OF THE MICROSURFACING OMISSION LIMITS IS TO SKIP THE SECTION OF ROLLINS ROAD THAT HAS MORE RECENTLY BEEN RESURFACED AS PART OF THE MILLENNIUM TRAIL UNDERPASS PROJECT.
2. WITHIN THE MICROSURFACING OMISSION LIMITS, GROOVES FOR GROOVED THERMOPLASTIC PAVEMENT MARKINGS SHALL BE INSTALLED TO MATCH THE LOCATIONS OF THE EXISTING PAVEMENT MARKINGS.

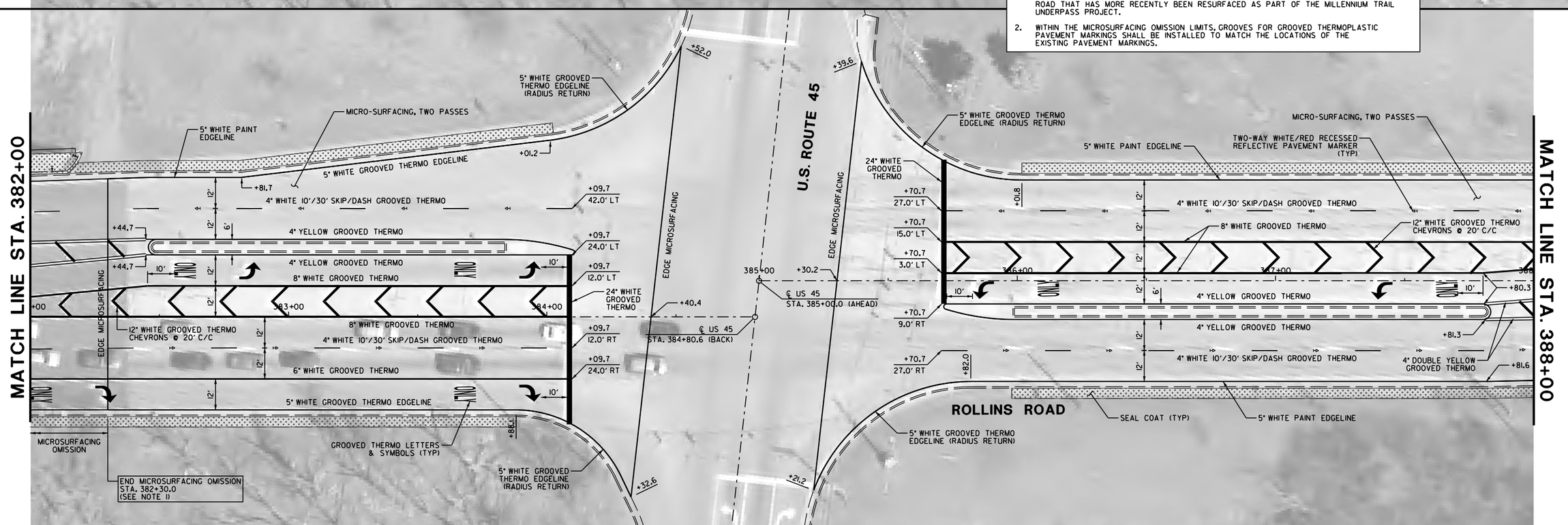

REVISIONS / REMARKS					
NO.	DESCRIPTION	DATE	BY	SURVEYOR:	___/___
		___/___/___	___	DSGNR/LIAISON:	___/___
		___/___/___	___	PLOTTED BY: khdl8691 8/24/2016	

SCALE HORIZ. 0 20 40

MICROSURFACING 2016
ROLLINS ROAD (HOOK DRIVE TO IL 132)

LakeCounty Division of Transportation

PLAN SHEET
STA. 376+00.0 TO 388+00.0

ROUTE	SECTION	SECTION NUMBER	SHEET	SHEETS
CH31	80	16-00080-61-RS	31	66

FILE NAME: U:\Design\Russo\16-00080-61-RS Microsurfacing 2016\CAD\16-00080-61-RS.dgn

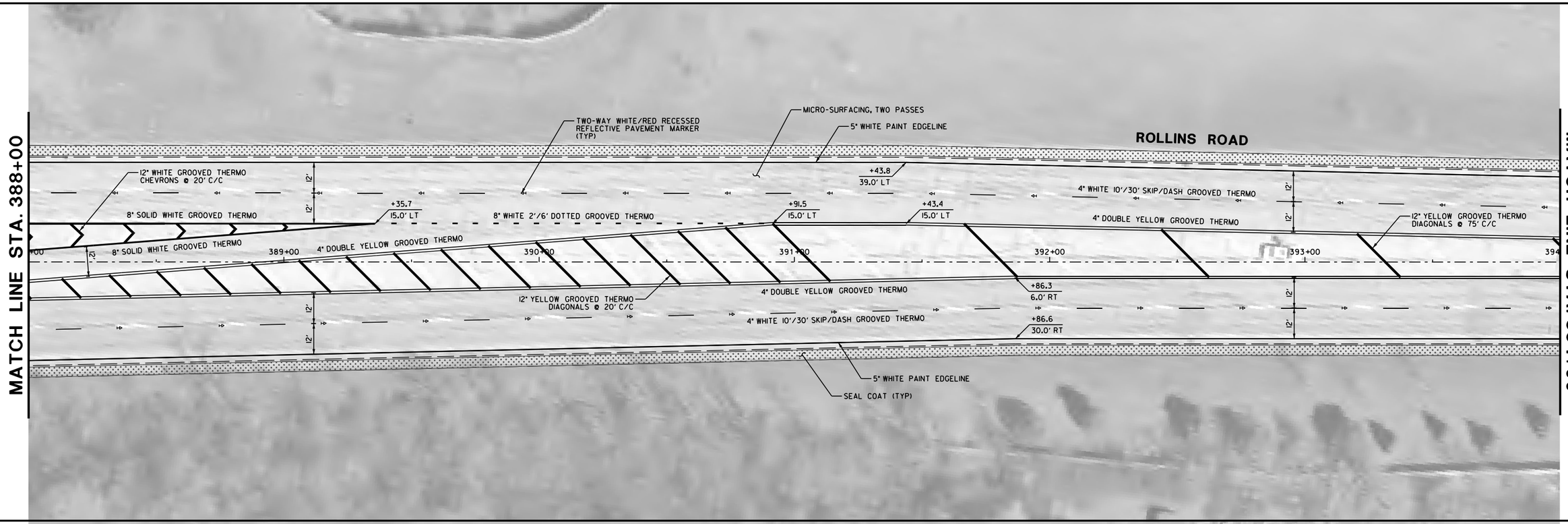

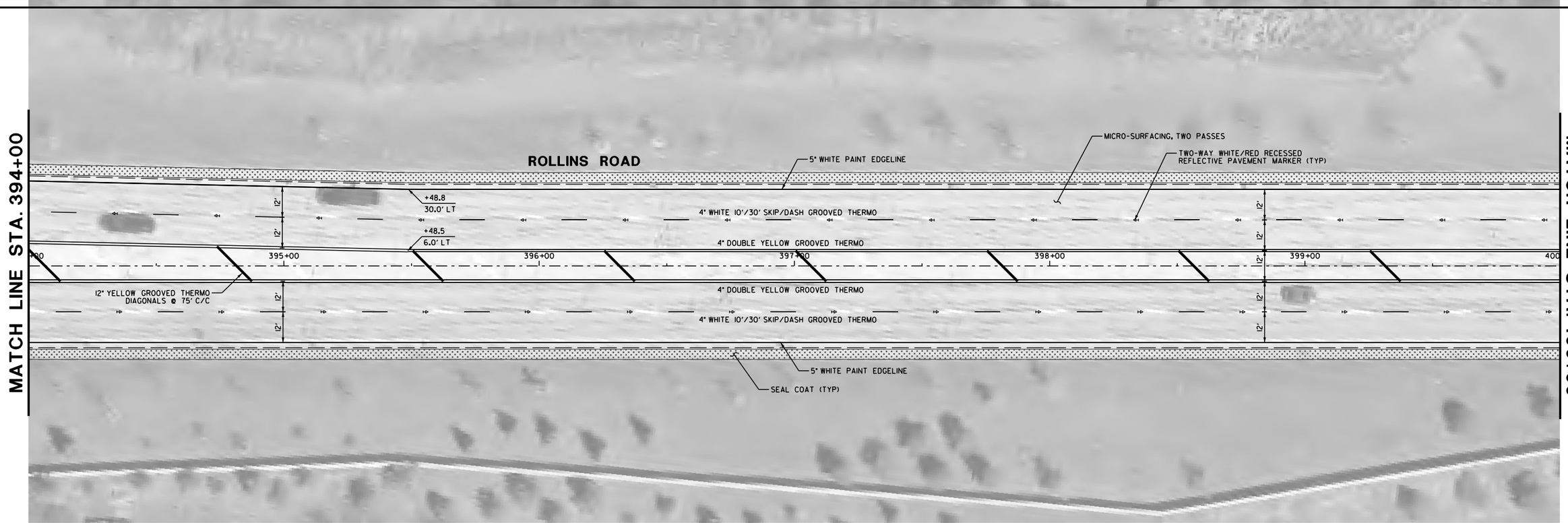

REVISIONS / REMARKS					
NO.	DESCRIPTION	DATE	BY	SURVEYOR:	
				DSGNR/LIAISON:	
				PLOTTED BY:	khdi8691 8/23/2016

SCALE HORIZ. 0 20 40

MICROSURFACING 2016
ROLLINS ROAD (HOOK DRIVE TO IL 132)

LakeCounty Division of Transportation

PLAN SHEET
STA. 388+00.0 TO 400+00.0

ROUTE	SECTION	SECTION NUMBER	SHEET	SHEETS
CH31	80	16-00080-61-RS	32	66

FILE NAME: U:\Design\Russo\16-00080-61-RS Microsurfacing 2016\CAD\16-00080-61-RS.dgn

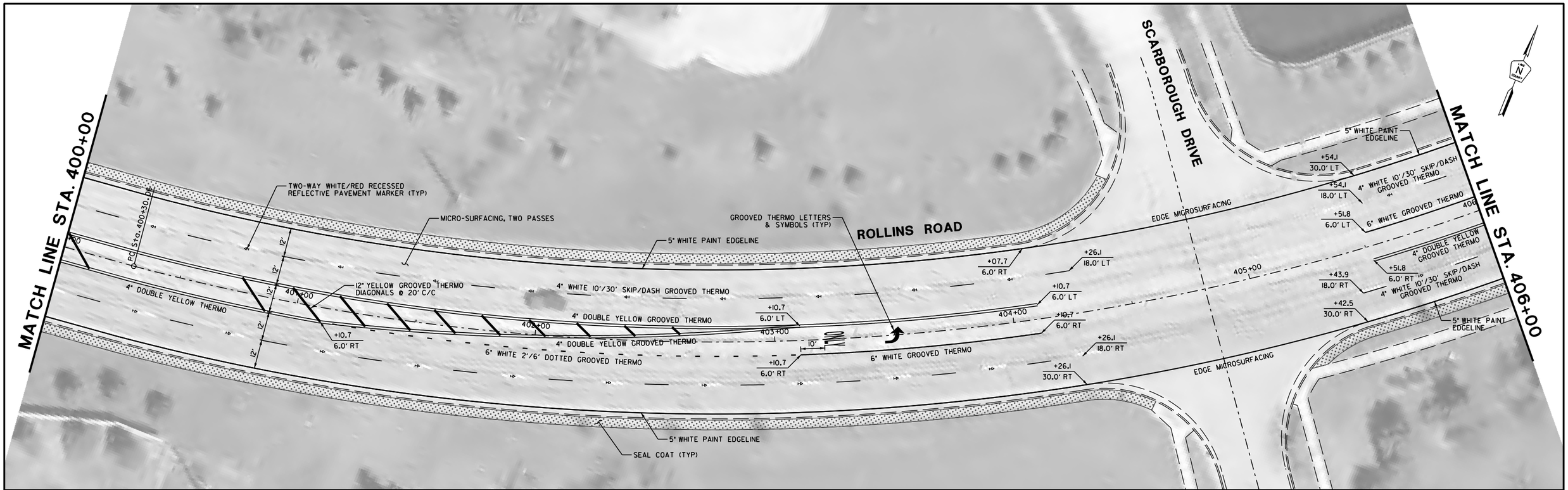

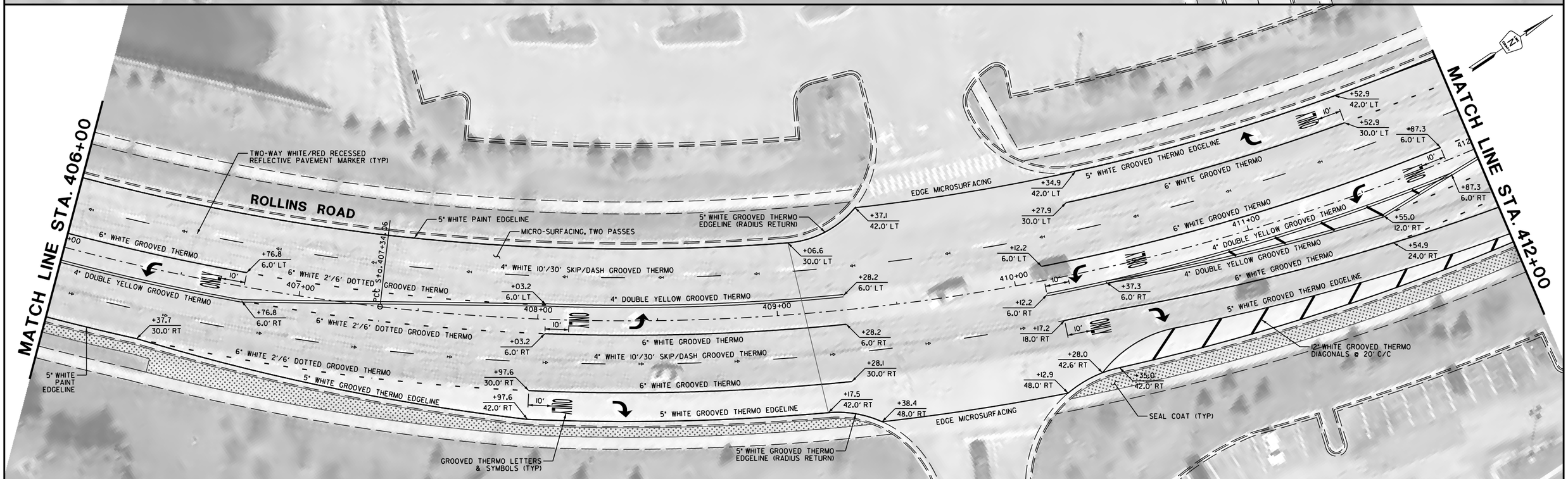

REVISIONS / REMARKS					
NO.	DESCRIPTION	DATE	BY		
		__/__/__		SURVEYOR:	__/__
		__/__/__		DSGNR/LIAISON:	
		__/__/__		PLOTTED BY: khdl8691 8/23/2016	

VERT 5 0

SCALE HORIZ. 0 20 40

MICROSURFACING 2016
ROLLINS ROAD (HOOK DRIVE TO IL 132)

LakeCounty Division of Transportation

PLAN SHEET
STA. 400+00.0 TO 412+00.0

ROUTE	SECTION	SECTION NUMBER	SHEET	SHEETS
CH31	80	16-00080-61-RS	33	66

FILE NAME: U:\Design\Russo\16-00080-61-RS Microsurfacing 2016\CAD\16-00080-61-RS.dgn

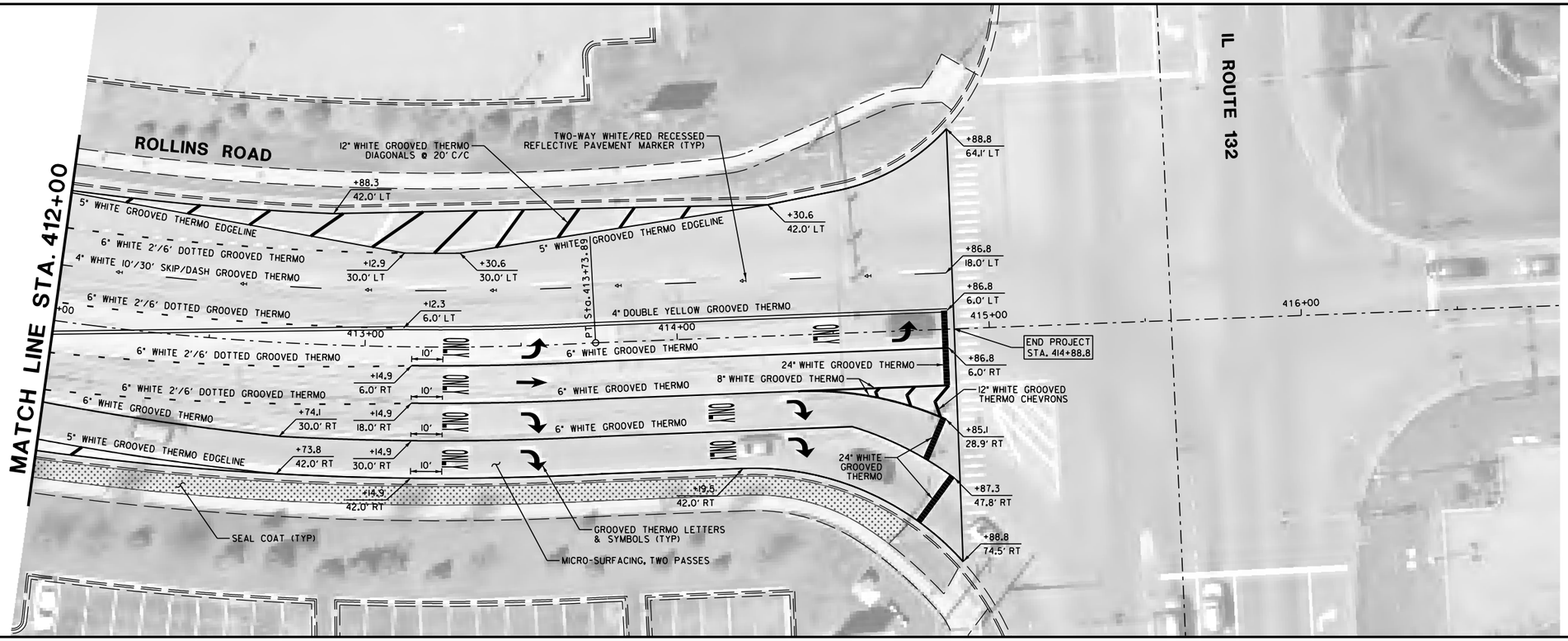

REVISIONS / REMARKS					
NO.	DESCRIPTION	DATE	BY	SURVEYOR:	___/___
		__/__/__		DSGNR/LIAISON:	___
		__/__/__		PLOTTED BY:	khdi8691 8/23/2016

SCALE HORIZ. 0 20 40

MICROSURFACING 2016
ROLLINS ROAD (HOOK DRIVE TO IL 132)

LakeCounty Division of Transportation

PLAN SHEET
STA. 412+00.0 TO 414+88.8

ROUTE	SECTION	SECTION NUMBER	SHEET	SHEETS
CH31	80	16-00080-61-RS	34	66

FILE NAME: U:\Design\Russo\16-00080-61-RS Microsurfacing 2016\CAD\16-00080-61-RS.dgn

ROLLINS ROAD TRAFFIC CONTROL PLAN

TRAFFIC CONTROL AND PROTECTION GENERAL NOTES
(LCDOT – 2/4/2015 revision)

1. APPLICABLE STANDARDS

   IDOT Standards: 701421-07, 701426-08, 701427-04, 701602-07, 701901-05

   LCDOT Standards: LC7003, LC7004, LC7200, LC7802

2. No work shall begin until the Traffic Control measures are in place. The Contractor shall at all times provide traffic protection by the application of traffic control devices according to the "Standard Specifications" and as shown on the plans.

3. The permanent traffic control shown on the plans is the minimum requirement. Additional traffic control devices as specified by the above Highway Standards and the Special Provisions shall be placed by the Contractor to the satisfaction of the Engineer. All traffic control devices shall be considered included in the lump sum pay item TRAFFIC CONTROL AND PROTECTION (SPECIAL) unless otherwise shown on the plans or in the special provisions.

4. All traffic control warning signs and associated signing mounted with the warning signs shall have black legends and borders on fluorescent orange reflective sheeting.

5. All construction signs, barricades and other devices required to control traffic shall be furnished, installed and maintained by the Contractor.

   - The Contractor shall furnish and install two weighted sand bags on each Type II barricade.
   - The Contractor shall furnish and install a minimum of four weighted sand bags on each Type III barricade.

6. All traffic control devices shall be removed, covered or turned away from traffic immediately when they are no longer necessary. When a sign is covered, its post shall have a reflective 3 inch x 6 inch delineator installed.

7. The sign spacing for the above Highway Standards shall be according to the Sign Spacing Table shown on this Traffic Control Plan.

8. Road name plates shall be installed on the "ROAD WORK AHEAD" signs at the intersections shown on this Traffic Control Plan. The road name plates shall be 9 inch blanks with 6 inch uppercase and 5 inch lowercase lettering. The road name plates shall be furnished by the Contractor.

9. "ROAD WORK AHEAD" signs shall be equipped with mono-directional Type A amber flashing lights.

10. When milled pavement is open to traffic the grade difference between adjacent lanes shall be limited to a maximum of 1.5 inches. The grade difference may be increased to a maximum of 3 inches with the following

    - A 3:1 or flatter slope is provided between lanes.
    - Written approval from the Engineer.

SIGN NO.		SIGN TYPE
1		W20-1(0)-48
2	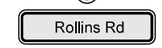	W17-1100 (0)-9xVARIABLE
3		M6-1R (0)-2115
4		M6-1L (0)-2115
5		M6-3 (0)-2115
6		M6-4 (0)-2115

POSTED SPEED LIMITS

ROLLINS ROAD

WEST OF WOOD ST:	40 MPH
WOOD ST TO US 45:	45 MPH
US 45 TO IL 132:	40 MPH

DRURY LANE:	30 MPH
IL 83:	35 MPH
IL 132:	50 MPH
US 45:	45 MPH

ALL OTHER ROADS: 25 MPH

TRAFFIC CONTROL SIGN SPACING TABLE

55 MPH	500 FT.
45-50 MPH	350 FT.
< 45 MPH	200 FT.

REVISIONS / REMARKS

NO.	DESCRIPTION	DATE	BY
		__/__/__	
		__/__/__	

SURVEYOR: __/__
DSGNR/LIAISON: __
PLOTTED BY: khdl8691 8/23/2016

MICROSURFACING 2016
ROLLINS ROAD (HOOK DRIVE TO IL 132)

LakeCounty
Division of Transportation

TRAFFIC CONTROL PLAN

ROUTE	SECTION	SECTION NUMBER	SHEET	SHEETS
CH31	80	16-00080-61-RS	35	66

FILE NAME: U:\Design\Russo\16-00080-61-RS Microsurfacing 2016\CAD\16-00080-61-RS.dgn

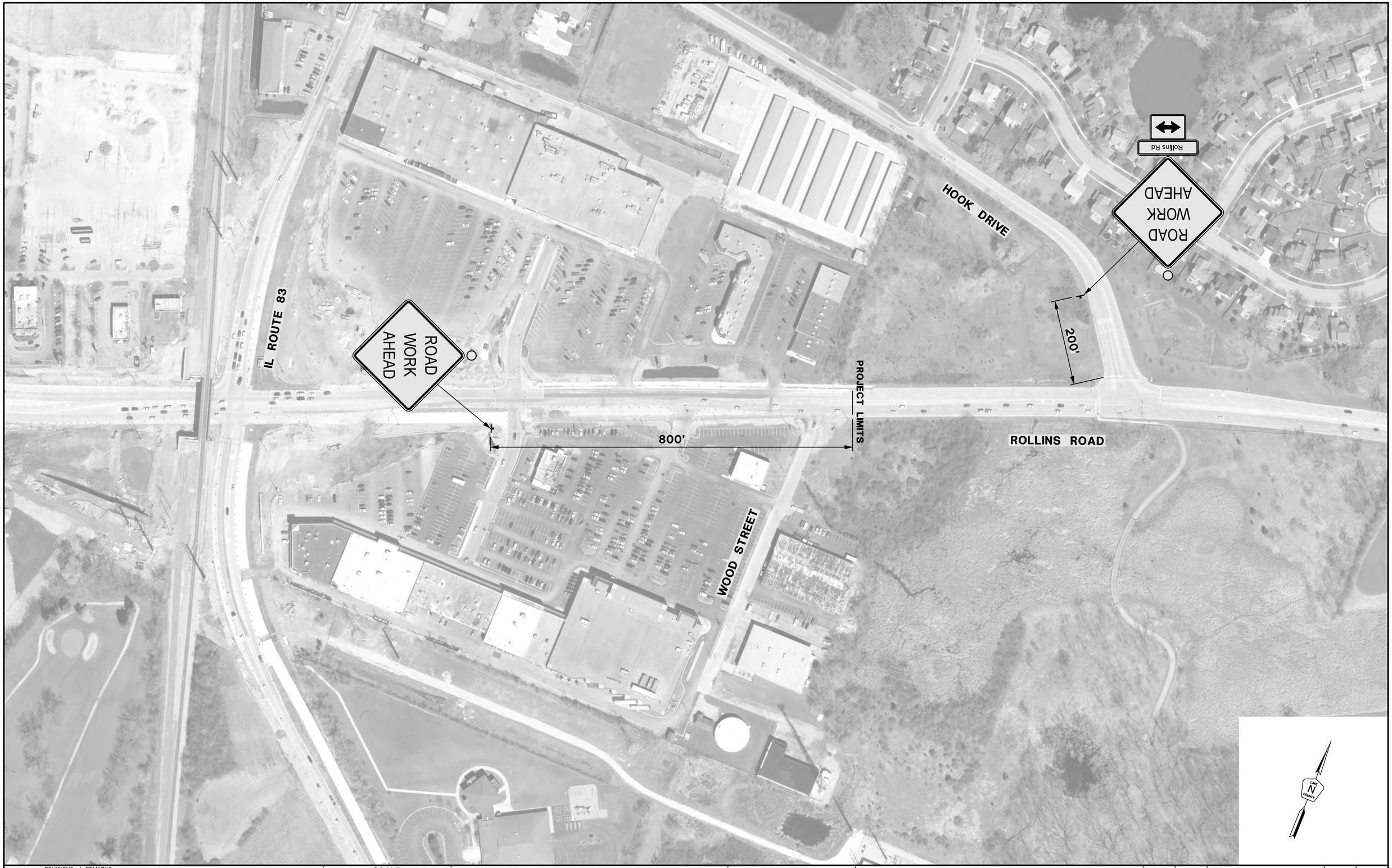

REVISIONS / REMARKS					
NO.	DESCRIPTION	DATE	BY	SURVEYOR:	___/___
		__/__/__		DSGNR/LIAISON:	
		__/__/__		PLOTTED BY:	khdl8691 8/23/2016

SCALE HORIZ. 0 100 200

MICROSURFACING 2016
ROLLINS ROAD (HOOK DRIVE TO IL 132)

LakeCounty Division of Transportation

TRAFFIC CONTROL PLAN

ROUTE	SECTION	SECTION NUMBER	SHEET	SHEETS
CH31	80	16-00080-61-RS	36	66

FILE NAME: U:\Design\Russo\16-00080-61-RS Microsurfacing 2016\CAD\16-00080-61-RS.dgn

REVISIONS / REMARKS					
NO.	DESCRIPTION	DATE	BY	SURVEYOR:	___/___
		__/__/__	___	DSGNR/LIAISON:	___
		__/__/__	___	PLOTTED BY:	khdl8691 8/23/2016

SCALE
HORIZ.
0 100 200

MICROSURFACING 2016
ROLLINS ROAD (HOOK DRIVE TO IL 132)

LakeCounty
Division of Transportation

TRAFFIC CONTROL PLAN

ROUTE	SECTION	SECTION NUMBER	SHEET	SHEETS
CH31	80	16-00080-61-RS	37	66

FILE NAME: U:\Design\Russo\16-00080-61-RS Microsurfacing 2016\CAD\16-00080-61-RS.dgn

REVISIONS / REMARKS					
NO.	DESCRIPTION	DATE	BY	SURVEYOR:	___/___
		__/__/__	___	DSGNR/LIAISON:	___/___
		__/__/__	___	PLOTTED BY:	khdl8691 8/23/2016

SCALE HORIZ. 0 100 200

MICROSURFACING 2016
ROLLINS ROAD (HOOK DRIVE TO IL 132)

LakeCounty
Division of Transportation

TRAFFIC CONTROL PLAN

ROUTE	SECTION	SECTION NUMBER	SHEET	SHEETS
CH31	80	16-00080-61-RS	38	66

FILE NAME: U:\Design\Russo\16-00080-61-RS Microsurfacing 2016\CAD\16-00080-61-RS.dgn

REVISIONS / REMARKS					
NO.	DESCRIPTION	DATE	BY	SURVEYOR:	___/___
		__/__/__		DSGNR/LIAISON:	
		__/__/__		PLOTTED BY: khdl8691 8/23/2016	

SCALE
HORIZ.
0 100 200

MICROSURFACING 2016
ROLLINS ROAD (HOOK DRIVE TO IL 132)

LakeCounty
Division of Transportation

TRAFFIC CONTROL PLAN

ROUTE	SECTION	SECTION NUMBER	SHEET	SHEETS
CH31	80	16-00080-61-RS	39	66

FILE NAME: U:\Design\Russo\16-00080-61-RS Microsurfacing 2016\CAD\16-00080-61-RS.dgn

REVISIONS / REMARKS					
NO.	DESCRIPTION	DATE	BY	SURVEYOR:	___/___
		___/___/___	___	DSGNR/LIAISON:	___
		___/___/___	___	PLOTTED BY:	khd18691 8/23/2016

SCALE
HORIZ.
0 100 200

MICROSURFACING 2016
ROLLINS ROAD (HOOK DRIVE TO IL 132)

LakeCounty
Division of Transportation

TRAFFIC CONTROL PLAN

ROUTE	SECTION	SECTION NUMBER	SHEET	SHEETS
CH31	80	16-00080-61-RS	40	66

FILE NAME: U:\Design\Russo\16-00080-61-RS Microsurfacing 2016\CAD\16-00080-61-RS.dgn

MATCH LINE -- SEE NEXT SHEET

REVISIONS / REMARKS					
NO.	DESCRIPTION	DATE	BY	SURVEYOR:	___/___
		__/__/__		DSGNR/LIAISON:	___
		__/__/__		PLOTTED BY:	xhdi8691 8/23/2016

SCALE HORIZ. 0 100 200

MICROSURFACING 2016
ROLLINS ROAD (HOOK DRIVE TO IL 132)

LakeCounty
Division of Transportation

TRAFFIC CONTROL PLAN

ROUTE	SECTION	SECTION NUMBER	SHEET	SHEETS
CH31	80	16-00080-61-RS	41	66

FILE NAME: U:\Design\Russo\16-00080-61-RS Microsurfacing 2016\CAD\16-00080-61-RS.dgn

MATCH LINE -- SEE PREVIOUS SHEET

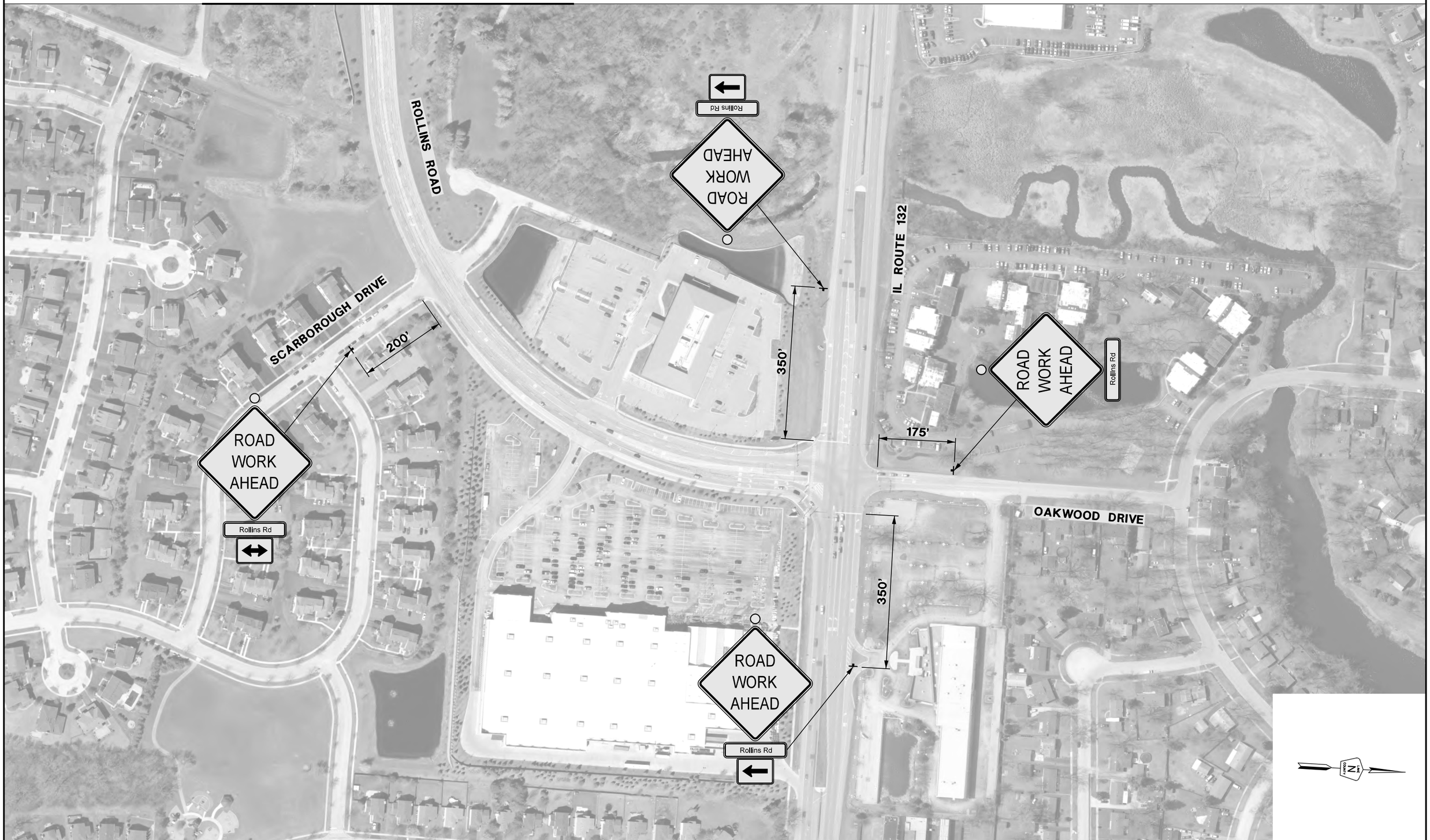

REVISIONS / REMARKS					
NO.	DESCRIPTION	DATE	BY	SURVEYOR:	___/___
		__/__/__	___	DSGNR/LIAISON:	___/___
		__/__/__	___	PLOTTED BY:	khdl8691 8/23/2016

SCALE HORIZ. 0 100 200

MICROSURFACING 2016
ROLLINS ROAD (HOOK DRIVE TO IL 132)

LakeCounty Division of Transportation

TRAFFIC CONTROL PLAN

ROUTE	SECTION	SECTION NUMBER	SHEET	SHEETS
CH31	80	16-00080-61-RS	42	66

FILE NAME: U:\Design\Russo\16-00080-61-RS Microsurfacing 2016\CAD\16-00080-61-RS.dgn

TYPICAL APPLICATION OF TRAFFIC CONTROL DEVICES for HIGHWAY CONSTRUCTION, CONTRACT MAINTENANCE and UTILITY OPERATIONS

NOT TO SCALE

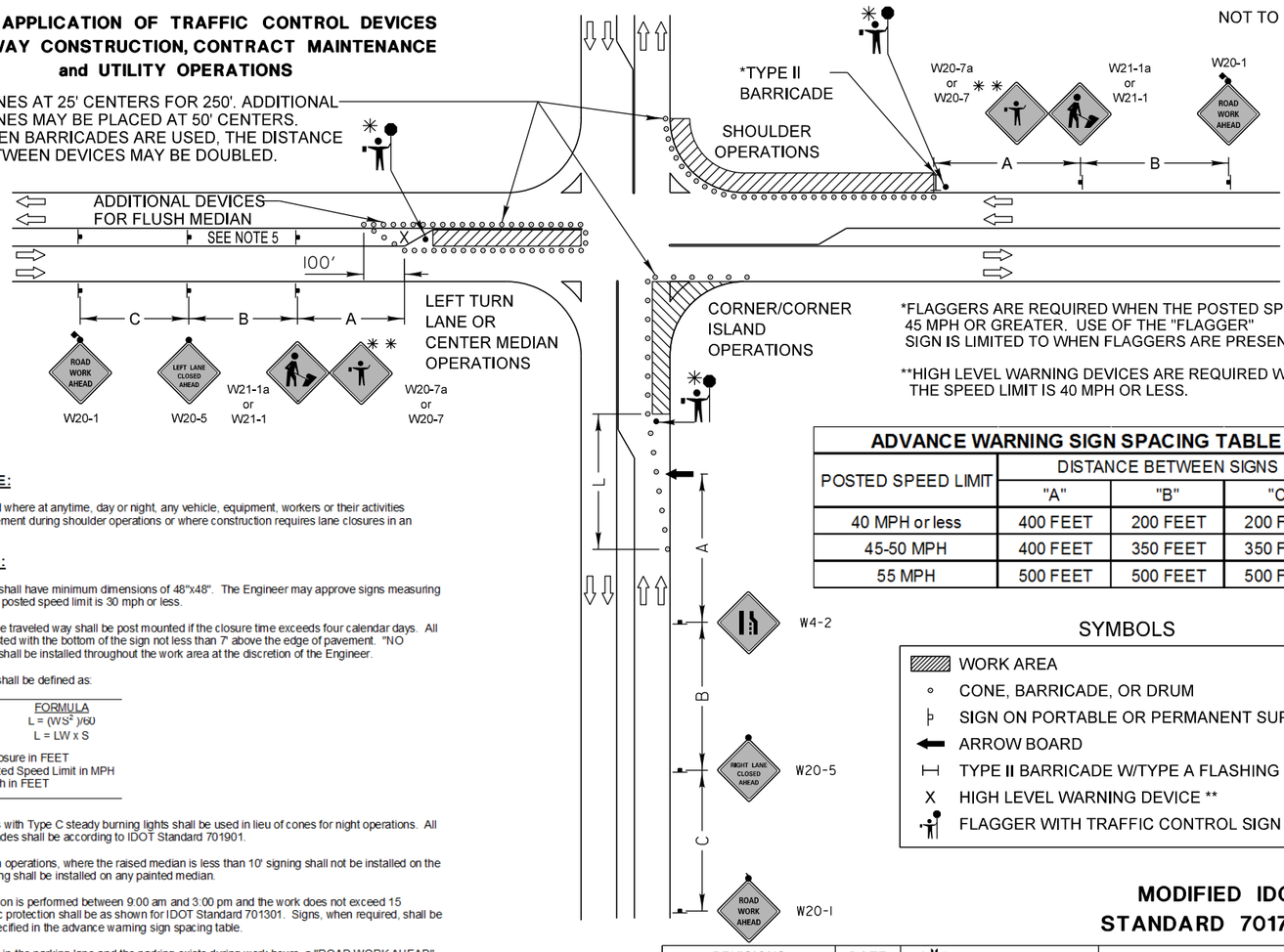

*FLAGGERS ARE REQUIRED WHEN THE POSTED SPEED IS 45 MPH OR GREATER. USE OF THE "FLAGGER" SIGN IS LIMITED TO WHEN FLAGGERS ARE PRESENT.

**HIGH LEVEL WARNING DEVICES ARE REQUIRED WHEN THE SPEED LIMIT IS 40 MPH OR LESS.

ADVANCE WARNING SIGN SPACING TABLE

POSTED SPEED LIMIT	DISTANCE BETWEEN SIGNS		
	"A"	"B"	"C"
40 MPH or less	400 FEET	200 FEET	200 FEET
45-50 MPH	400 FEET	350 FEET	350 FEET
55 MPH	500 FEET	500 FEET	500 FEET

SYMBOLS

- WORK AREA
- CONE, BARRICADE, OR DRUM
- SIGN ON PORTABLE OR PERMANENT SUPPORT
- ARROW BOARD
- TYPE II BARRICADE W/TYPE A FLASHING LIGHT
- X HIGH LEVEL WARNING DEVICE **
- FLAGGER WITH TRAFFIC CONTROL SIGN

GENERAL NOTE:

This Standard is used where at anytime, day or night, any vehicle, equipment, workers or their activities encroach on the pavement during shoulder operations or where construction requires lane closures in an urban area.

DESIGN NOTES:

1. All warning signs shall have minimum dimensions of 48"x48". The Engineer may approve signs measuring 36"x36" when the posted speed limit is 30 mph or less.
2. All signs not on the traveled way shall be post mounted if the closure time exceeds four calendar days. All signs shall be posted with the bottom of the sign not less than 7' above the edge of pavement. "NO PARKING" signs shall be installed throughout the work area at the discretion of the Engineer.
3. The distance "L" shall be defined as:

SPEED	FORMULA
≤ 40 MPH	$L = (WS^2)/60$
≥ 45 MPH	L = LW x S

W = Width of Closure in FEET
S = Normal Posted Speed Limit in MPH
LW = Lane Width in FEET

4. Type II barricades with Type C steady burning lights shall be used in lieu of cones for night operations. All cones and barricades shall be according to IDOT Standard 701901.
5. For raised median operations, where the raised median is less than 10' signing shall not be installed on the median. No signing shall be installed on any painted median.
6. If the work operation is performed between 9:00 am and 3:00 pm and the work does not exceed 15 minutes, the traffic protection shall be as shown for IDOT Standard 701301. Signs, when required, shall be at the spacing specified in the advance warning sign spacing table.
7. If the work area is in the parking lane and the parking exists during work hours, a "ROAD WORK AHEAD" sign shall be installed in advance of work area at the spacing specified in the Advance Warning Sign Spacing Table and the area protected with cones or barricades.
8. Type A flashing lights shall be used on each approach in advance of the work area during hours of darkness and installed above the first two sign in each series and the high level warning devices.
9. Longitudinal dimensions may be adjusted to fit field conditions.
10. Form BT 725 is required.

REVISIONS	DATE
Revised IDOT Reference	2/1/08
Title Block Revision	8/1/09
Reformat LCDOT Standard	7/15/10
Removed "Worker" & "Flagger" signs	6/26/12
Updated IDOT Standard Version #	3/29/16

LakeCounty Division of Transportation

APPROVED BY: ANTHONY KHAWAJA
DATE: APRIL 1, 2007

MODIFIED IDOT STANDARD 701701-10

URBAN LANE CLOSURE MULTILANE INTERSECTION

LC7003

TYPICAL APPLICATION OF TRAFFIC CONTROL DEVICES for HIGHWAY CONSTRUCTION, CONTRACT MAINTENANCE and UTILITY OPERATIONS

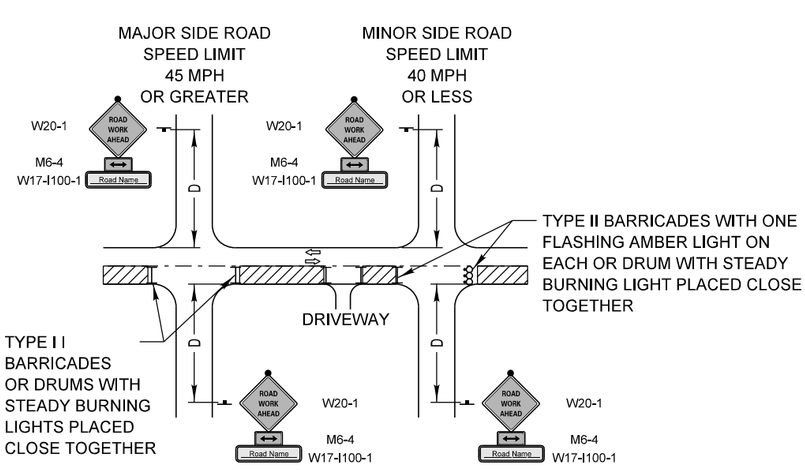

SYMBOLS

- WORK AREA
- SIGN ON PORTABLE OR PERMANENT SUPPORT
- TYPE II BARRICADE W/TYPE A FLASHING LIGHT
- DRUM WITH STEADY BURNING LIGHT

ADVANCE WARNING SIGN SPACING TABLE

POSTED SPEED LIMIT	DISTANCE BETWEEN SIGNS "D"
40 MPH or less	200 FEET
45-50 MPH	350 FEET
55 MPH	500 FEET

GENERAL NOTE:

This Standard is used where at any time, day or night, any vehicle, equipment, workers or their activities encroach on the pavement or where construction requires lane closures.

DESIGN NOTES:

1. For a side road with a speed limit of 40 mph or less, the closed portion of the main route shall be protected by blocking with Type II barricades or drums, 1/3 of the cross section of the closed portion of the roadway.
2. For a side road with a speed limit of 45 mph or greater, the closed portion of the main route shall be protected by blocking with Type II barricades or drums, 1/2 of the cross section of the closed portion of the roadway.
3. All W20-1 "ROAD WORK AHEAD" signs shall be 48"x48" with fluorescent orange reflective sheeting with an amber Type A flashing light mounted on the sign.
4. When the side road lies between the beginning of the mainline signing and the work zone, a M6-1 Single Headed Arrow shall be used in lieu of the M6-4 Double Headed Arrow.
5. For a lane closure on a side road, use the applicable portions of the appropriate Highway Standard or Traffic Control Detail. The spacing of the signs and barricades or drums shall be adjusted for field conditions as directed by the engineer. The directional arrow shall be covered or removed when no longer consistent with the side road closure.
6. Advance warning signs shall be omitted on driveways unless otherwise noted.
7. The traffic control and protection for side roads and intersections shall be included in the contract lump sum price for "TRAFFIC CONTROL AND PROTECTION, SPECIAL."

NOT TO SCALE

REVISIONS	DATE
Title Block Revision	8/1/09
Reformat LCDOT Standard	7/15/10
Use of Drums in lieu Type III Barricade	4/22/14

LakeCounty Division of Transportation

APPROVED BY: ANTHONY KHAWAJA
DATE: APRIL 1, 2007

MODIFIED IDOT DISTRICT ONE SIDE ROAD DETAIL

TRAFFIC CONTROL and PROTECTION for SIDEROADS, INTERSECTIONS and DRIVEWAYS

LC7004

NO.	REVISIONS / REMARKS DESCRIPTION	DATE	BY

SURVEYOR: DSGNR/LIAISON: PLOTTED BY: khoi8659 8/23/2016

FILE NAME: U:\Design\Russo\16-00080-61-RS Microsurfacing 2016\CAD\16-00080-61-RS.dgn

MICROSURFACING 2016
ROLLINS ROAD (HOOK DRIVE TO IL 132)

LakeCounty Division of Transportation

LCDOT STANDARDS & DETAILS

ROUTE	SECTION	SECTION NUMBER	SHEET	SHEETS
CH31	80	16-00080-61-RS	43	66

DIRECTION INDICATOR BARRICADES

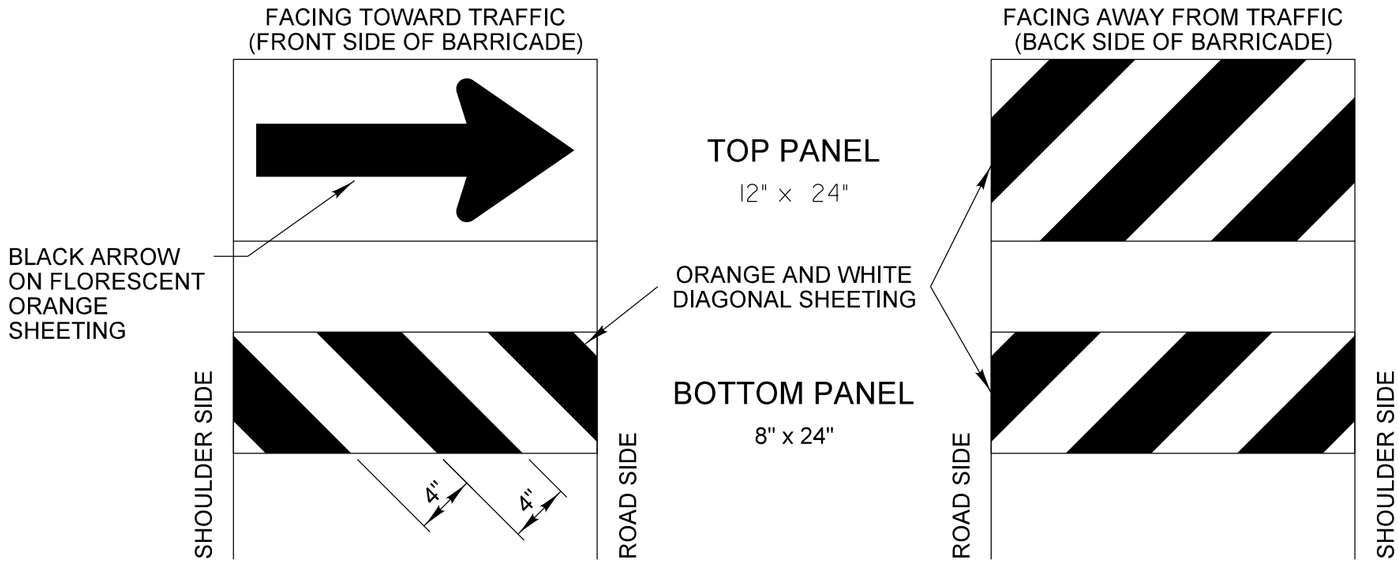

GENERAL NOTES

1) Direction Indicator Barricades shall be constructed from non-metallic Type II barricades meeting the requirements of Article 1106.02 of the Standard Specifications, except where modified by this detail.
2) The Direction Indicator Barricades shall be equipped with Type C steady burning lights if used to channelize traffic during the hours of darkness.
3) The reflective sheeting for the top panel shall be Type AZ fluorescent orange. The diagonal panels shall have orange and white Type A or better reflective sheeting.

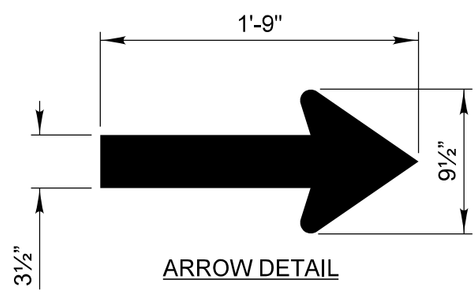

ARROW DETAIL

REVISIONS	DATE
Text Update	7/15/11

LakeCounty Division of Transportation

APPROVED BY: ANTHONY KHAWAJA
DATE: APRIL 1, 2007

TYPICAL APPLICATION OF TRAFFIC CONTROL DEVICES
HIGHWAY CONSTRUCTION, CONTRACT MAINTENANCE

DIRECTION INDICATOR BARRICADES

LC7200

NO.	REVISIONS / REMARKS DESCRIPTION	DATE	BY
		/ /	
		/ /	
		/ /	
		/ /	

SURVEYOR: DSGNR/LIAISON: PLOTTED BY: khn8659 8/23/2016

FILE NAME: U:\Design\Russo\16-00080-61-RS Microsurfacing 2016\CAD\16-00080-61-RS.dgn

MICROSURFACING 2016
ROLLINS ROAD (HOOK DRIVE TO IL 132)

LakeCounty Division of Transportation

LCDOT STANDARDS & DETAILS

ROUTE	SECTION	SECTION NUMBER	SHEET	SHEETS
CH31	80	16-00080-61-RS	44	66

TYPICAL PAVEMENT MARKINGS

TYPICAL MINI-SKIP PAVEMENT MARKINGS

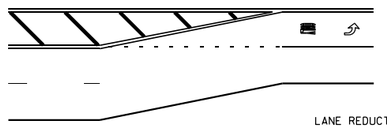

LANE REDUCTION

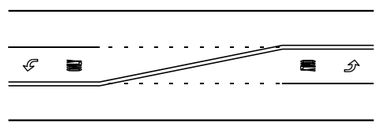

DOUBLE TAPER

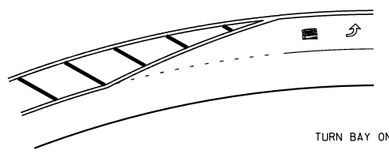

TURN BAY ON CURVE

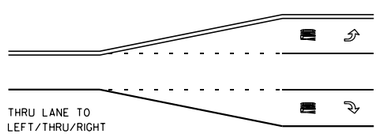

MINI-SKIPS ARE 2 FEET WHITE LINE WITH 6 FEET SPACING. THE MINI-SKIP IS THE SAME WIDTH AS THE PAVEMENT MARKING LINE, IT EXTENDS.

EDGE LINE RADII AT SIDE STREETS

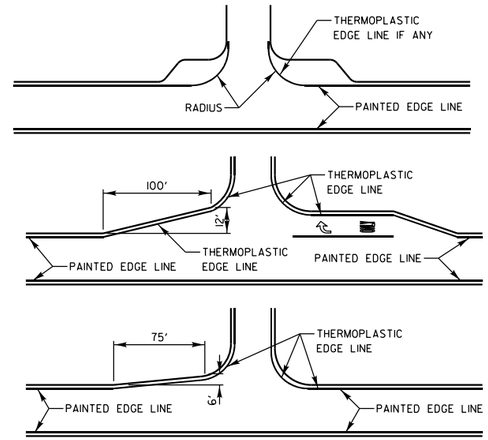

LANE REDUCTION ARROW PLACEMENT

REFERENCE:
1. MANUAL ON UNIFORM TRAFFIC CONTROL DEVICES, 2009 EDITION (USDOT-FHWA), TABLE 2C-4, CONDITION "A".

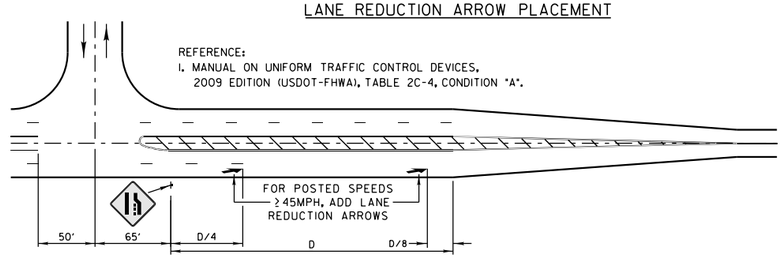

DESIGN SPEED MPH	D (FEET)
<45	N/A
45	775' [1]
50	885' [1]
55	990' [1]

TYPICAL TURN BAY PAVEMENT MARKINGS

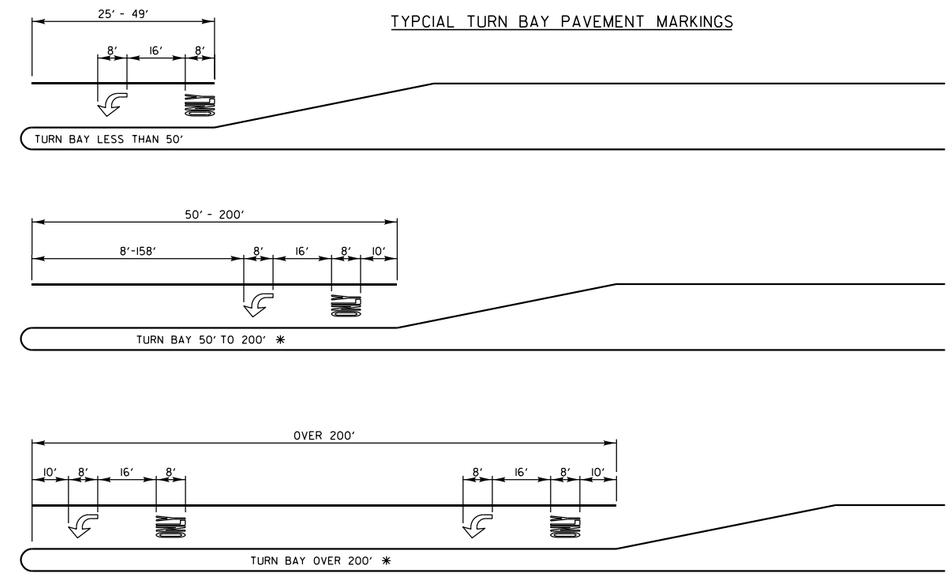

✱ AT INTERSECTIONS WITH VIDEO DETECTION, THE ARROW AND ONLY PAVEMENT MARKINGS SHALL BE A MINIMUM OF 30' BEHIND THE STOP BAR.

AREA = 15.6 SQ. FT.

AREA = 20.8 SQ FT.

FULL SIZE LETTERS (8') AND ARROWS SHALL BE USED. TURN LANES IN EXCESS OF 400' IN LENGTH MAY HAVE AN ADDITIONAL SET OF ARROW W/ "ONLY" INSTALLED MIDWAY BETWEEN THE OTHER TWO SETS OF ARROW W/ "ONLY".

TWO LANE ROAD

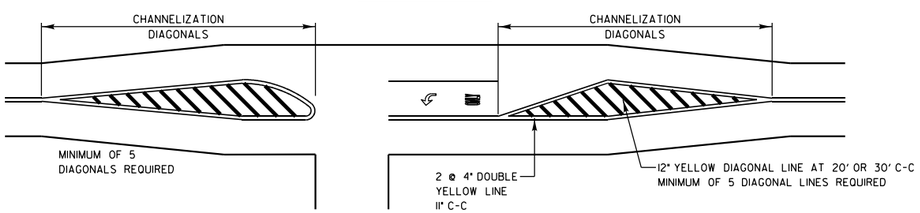

TWO-WAY LEFT TO LEFT TURN BAY

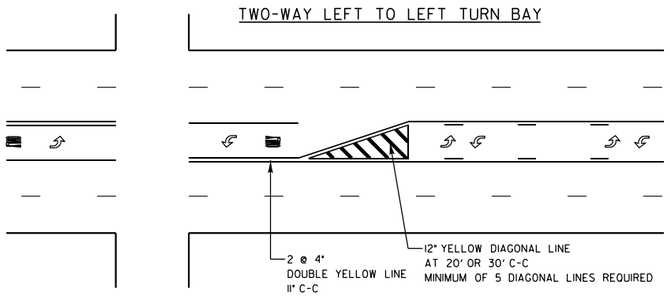

TYPICAL DIAGONAL SPACING

DIAGONAL SPACING

SPEED LIMIT RANGE	CONTINUOUS	INTERSECTION CHANNELIZATION
30-45 MPH	75 FT.	20 FT.
OVER 45 MPH	150 FT.	30 FT.

DUAL LEFT TURN ARROWS

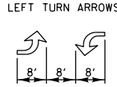

31.2 SQ. FT. MINIMUM OF 2 SETS REQUIRED

A MINIMUM OF TWO PAIRS OF DUAL LEFT TURN ARROWS SHALL BE USED. THE DUAL LEFT TURN ARROWS SHALL BE WHITE IN COLOR. THE INTERVAL BETWEEN SETS OF DUAL LEFT TURN ARROWS SHOULD BE 200' AND 300'.

3 OR 5 LANE ROAD

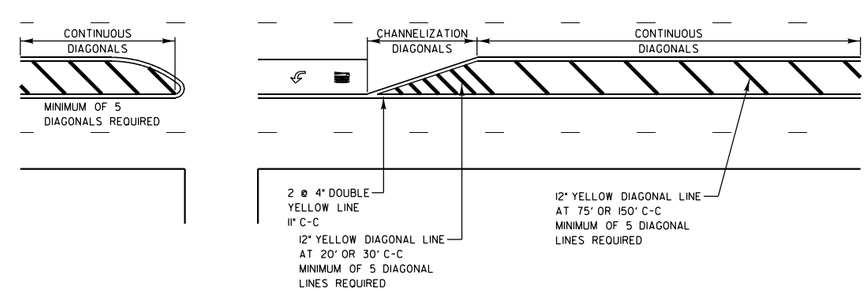

REVISIONS	DATE
SEPARATED RAILROAD SHEET	06/02/08
ADDED LANE REDUCTION ARROWS	07/1/12

LakeCounty
Division of Transportation

APPROVED BY: A. KHAWAJA
DATE: APRIL 1, 2007

TYPICAL PAVEMENT MARKINGS FOR COUNTY HIGHWAYS

SHEET 1 OF 2

LC7800

REVISIONS / REMARKS					
NO.	DESCRIPTION	DATE	BY	SURVEYOR:	___/___
		___/___/___	___	DSGNR/LIAISON:	___
		___/___/___	___	PLOTTED BY:	khdl8691 8/23/2016

MICROSURFACING 2016
ROLLINS ROAD (HOOK DRIVE TO IL 132)

LakeCounty
Division of Transportation

LCDOT STANDARDS & DETAILS

ROUTE	SECTION	SECTION NUMBER	SHEET	SHEETS
CH31	80	16-00080-61-RS	45	66

FILE NAME: U:\Design\Russo\16-00080-61-RS Microsurfacing 2016\CAD\16-00080-61-RS.dgn

TYPICAL PAVEMENT MARKINGS AND RAISED PAVEMENT MARKERS

THRU LANE TO TURN LANE CONVERSION

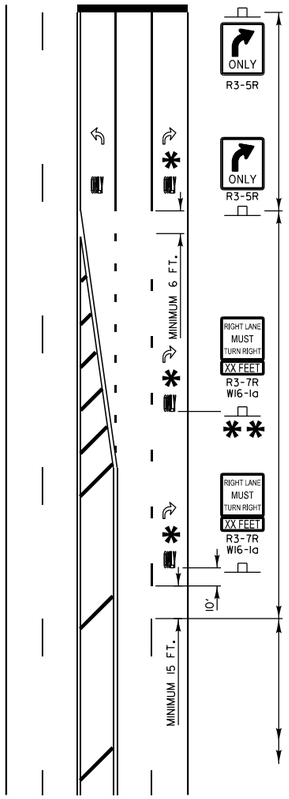

TURN LANE
6" WHITE LINE
(ADDITIONAL PAVEMENT MARKINGS AS SHOWN ON SHEET ONE OF THE L.C.D.O.T TYPICAL PAVEMENT MARKINGS DETAIL SHEETS)

TRANSITION ZONE
6" WHITE 3'/12' SKIP DASH
LANE LINE

THRU LANE
4 " WHITE 10'/30' SKIP DASH
LANE LINE

MINIMUM TRANSITION ZONE LENGTH

POSTED SPEED	LENGTH
25 M.P.H.	255 FT
30 M.P.H.	330 FT
35 M.P.H.	405 FT
40 M.P.H.	480 FT
45 M.P.H.	555 FT
50 M.P.H.	630 FT
55 M.P.H.	705 FT

* LOCATION OF PAV'T MARKINGS

(MEASURED FROM BEGINNING OF TRANSITION ZONE)

POSTED SPEED	LOCATION OF PAV'T MARKINGS
25 M.P.H.	10 FT, 260 FT
30 M.P.H.	10 FT, 170 FT, 340 FT
35 M.P.H.	10 FT, 210 FT, 410 FT
40 M.P.H.	10 FT, 170FT, 330 FT, 490 FT
45 M.P.H.	10 FT, 190 FT, 370 FT, 560 FT
50 M.P.H.	10 FT, 170 FT, 330 FT, 490 FT, 640 FT
55 M.P.H.	10 FT, 180 FT, 350 FT, 520 FT, 710 FT

** FOR POSTED SPEEDS 40 M.P.H. OR GREATER A SECOND R3-7/W16-1a SIGN INSTALLATION SHALL BE LOCATED HALFWAY BETWEEN THE BEGINNING OF THE TRANSITION ZONE AND THE BEGINNING OF THE TURN LANE

PAVEMENT MARKING GUIDELINES

TYPE OF MARKING	WIDTH OF LINE	PATTERN	COLOR	SPACING / REMARKS
CENTERLINE OF 2 LANE PAVEMENT	4 IN.	SKIP-DASH	YELLOW	10 FT. LINE WITH 30 FT. SPACE
NO PASSING ZONE LINES: FOR ONE DIRECTION FOR BOTH DIRECTIONS	4 IN. 2 @ 4 IN.	SOLID SOLID	YELLOW YELLOW	5 1/2 IN. C-C FROM SKIP-DASH CENTERLINE 11IN. C-C (OMIT SKIP-DASH CENTERLINE BETWEEN)
CENTERLINE ON MULTI-LANE UNDIVIDED	2 @ 4 IN.	SOLID	YELLOW	11 IN. C-C
LANE LINES	4 IN.	SKIP-DASH	WHITE	10 FT. LINE WITH 30 FT. SPACE
DOTTED LINES (EXTENSIONS OF CENTER, LANE OR TURN LANE MARKINGS)	SAME AS LINE BEING EXTENDED	SKIP-DASH	SAME AS LINE BEING EXTENDED	2 FT. LINE WITH 6 FT. SPACE
EDGE LINES	5 IN. WHITE 4 IN. YELLOW	SOLID	WHITE - RIGHT YELLOW - LEFT	OUTLINE RAISED MEDIANS IN YELLOW
TURN LANE MARKINGS	6 IN. LINE FULL SIZE LETTERS AND SYMBOLS (8 FT.)	SOLID	WHITE	TURN ARROW 15.6 SQ. FT. STRAIGHT ARROW 11.5 SQ. FT. ONLY 20.8 SQ. FT. COMB. ARROW 26.0 SQ. FT.
TWO WAY LEFT TURN MARKING	2 @ 4 IN. EACH DIRECTION 8 FT. LEFT ARROW	SKIP-DASH AND SOLID IN PAIRS	YELLOW WHITE	10 FT. LINE WITH 30 FT. SPACE FOR SKIP-DASH 5 1/2 IN. C-C BETWEEN SKIP-DASH LINE AND SOLID LINE SEE TYPICAL TWO-WAY LEFT TURN MARKING DETAIL
CROSSWALK	12 IN. @ 90°	SOLID	WHITE	12 IN. LONGITUDINAL BAR WITH 24 IN. SPACE 6 FT. TO 12 FT. WIDE SEE TYPICAL CROSSWALK MARKING DETAIL
STOP BARS	24 IN.	SOLID	WHITE	PLACE 4 FT. IN ADVANCE OF AND PARALLEL TO CROSSWALK, IF PRESENT, OTHERWISE PLACE AT DESIRED STOPPING POINT.
PAINTED MEDIANS	2 @ 4 IN. & 11 IN. C-C 12 IN. DIAGONALS @ 45° NO DIAGONALS USED FOR 4 FT. WIDE MEDIAN	SOLID	YELLOW: 2-WAY TRAFFIC WHITE: 1-WAY TRAFFIC	11 IN. C-C FOR THE DOUBLE LINE SEE TYPICAL PAINTED MEDIAN MARKING DETAIL MINIMUM OF 5 DIAGONALS
GORE MARKING AND CHANNELIZING LINES	8 IN. WITH 12 IN. DIAGONALS @ 45°	SOLID	WHITE	DIAGONALS 15 FT. C-C (LESS THAN 30 M.P.H.) 20 FT. C-C (30 TO 45 M.P.H.) 30 FT. C-C (OVER 45 M.P.H.) MINIMUM OF 5 DIAGONALS
R.R. CROSSING	24 IN. TRANSVERSE LINES RR IS 6 FT. LETTER 16 IN. LINE FOR "X"	SOLID	WHITE	SEE I.D.O.T. STD. 78000I SQ. FT. AREA OF: "R" = 3.6 SQ. FT. / "R" "X" = 54.0 SQ. FT.
SHOULDER DIAGONALS	12 IN. @ 45°	SOLID	WHITE - RIGHT YELLOW - LEFT	50 FT. C-C (LESS THAN 30 M.P.H.) 75 FT. C-C (30 TO 45 M.P.H.) 150 FT. C-C (OVER 45 M.P.H.) MINIMUM OF 5 DIAGONALS

FOR FURTHER DETAILS ON PAVEMENT MARKING REFER TO PART III "MARKINGS" IN THE "ILLINOIS MANUAL ON UNIFORM TRAFFIC CONTROL DEVICES", THE "STANDARD SPECIFICATIONS FOR ROAD AND BRIDGE CONSTRUCTION", AND THE LATEST I.D.O.T. HIGHWAY STANDARD 78000I.

TYPICAL RAISED PAVEMENT MARKER INSTALLATION

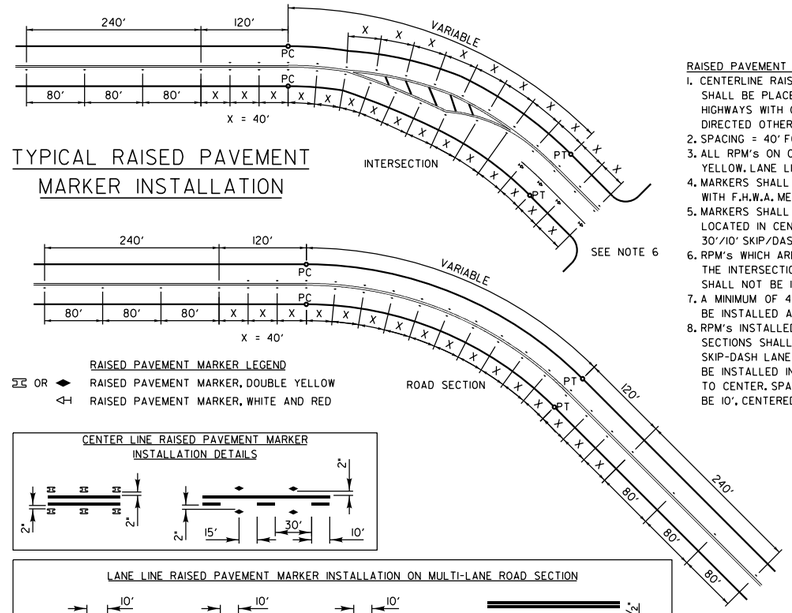

RAISED PAVEMENT MARKER LEGEND

OR RAISED PAVEMENT MARKER, DOUBLE YELLOW

RAISED PAVEMENT MARKER, WHITE AND RED

CENTER LINE RAISED PAVEMENT MARKER INSTALLATION DETAILS

LANE LINE RAISED PAVEMENT MARKER INSTALLATION ON MULTI-LANE ROAD SECTION

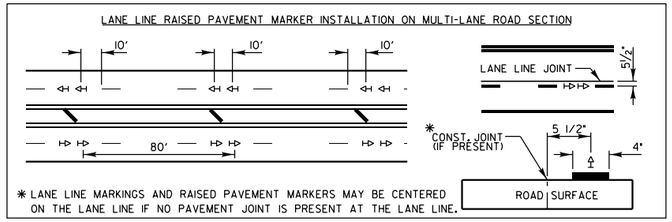

* LANE LINE MARKINGS AND RAISED PAVEMENT MARKERS MAY BE CENTERED ON THE LANE LINE IF NO PAVEMENT JOINT IS PRESENT AT THE LANE LINE.

PAVEMENT CROSS SECTION SHOWING TYPICAL PAVEMENT MARKINGS (2-LANE ROADWAY)

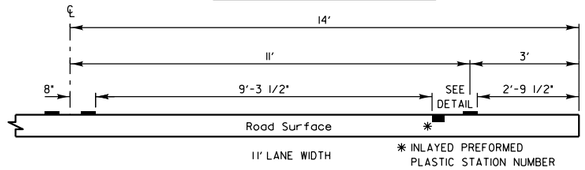

11' LANE WIDTH

* INLAYED PREFORMED PLASTIC STATION NUMBER

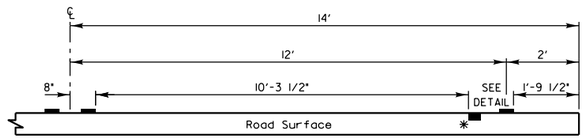

12' LANE WIDTH

* INLAYED PREFORMED PLASTIC STATION NUMBER

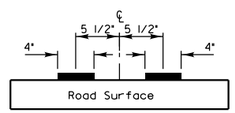

DOUBLE STRIPE CENTERLINE DETAIL

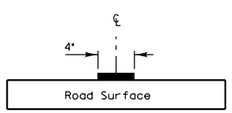

SINGLE STRIPE CENTERLINE DETAIL

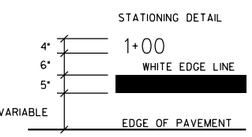

NOTE:
CENTERLINE MARKINGS ARE 4" LINES AT 11" CENTERS.

RAISED PAVEMENT MARKER NOTES:

1. CENTERLINE RAISED PAVEMENT MARKERS (RPM's) SHALL BE PLACED ON ALL TWO AND THREE LANE HIGHWAYS WITH CURVES OVER 3 1/2 DEGREES, UNLESS DIRECTED OTHERWISE BY THE ENGINEER.
2. SPACING = 40' FOR CENTERLINE MARKERS.
3. ALL RPM's ON CENTERLINE ARE 2-WAY YELLOW. LANE LINE MARKERS ARE WHITE/RED.
4. MARKERS SHALL BE INSTALLED IN ACCORDANCE WITH F.H.W.A. MEMORANDUM HIO-21.
5. MARKERS SHALL BE FIELD ADJUSTED TO BE LOCATED IN CENTER OF THE 30' GAP OF A 30'/10' SKIP/DASH CENTERLINE.
6. RPM's WHICH ARE TO BE LOCATED WITHIN THE INTERSECTION OF A CROSS STREET, SHALL NOT BE INSTALLED.
7. A MINIMUM OF 4 WHITE/RED MARKERS SHALL BE INSTALLED ALONG THE TURN LANE LINE.
8. RPM's INSTALLED ON MULTI-LANE ROAD SECTIONS SHALL BE INSTALLED ON THE WHITE SKIP-DASH LANE LINE ONLY. THESE RPM's SHALL BE INSTALLED IN PAIRS AND SHALL BE 80' CENTER TO CENTER. SPACING WITHIN EACH PAIR SHALL BE 10', CENTERED WITHIN THE 30' SKIP.

CROSSWALKS

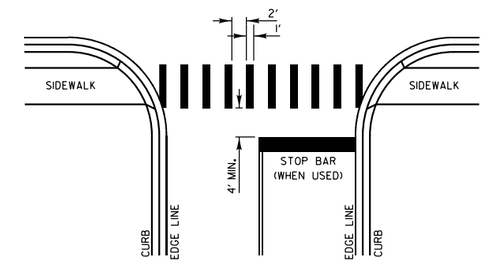

CROSSWALK NOTES:

1. WIDTH OF THE CROSSWALK IS GENERALLY 6' EXCEPT AT SCHOOL CROSSINGS AND BICYCLE CROSSINGS, WHICH CAN BE 8'.
2. THE STOP BAR SHOULD BE INSTALLED A MINIMUM OF 4' IN ADVANCE OF THE CROSSWALK.

CURB MARKING

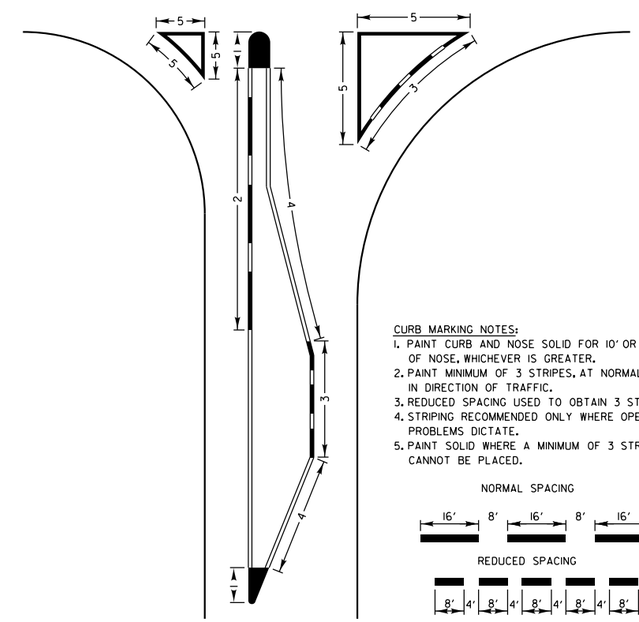

CURB MARKING NOTES:

1. PAINT CURB AND NOSE SOLID FOR 10' OR RADIUS OF NOSE, WHICHEVER IS GREATER.
2. PAINT MINIMUM OF 3 STRIPES, AT NORMAL SPACING, IN DIRECTION OF TRAFFIC.
3. REDUCED SPACING USED TO OBTAIN 3 STRIPE MINIMUM.
4. STRIPING RECOMMENDED ONLY WHERE OPERATIONAL PROBLEMS DICTATE.
5. PAINT SOLID WHERE A MINIMUM OF 3 STRIPES CANNOT BE PLACED.

NORMAL SPACING

REDUCED SPACING

REVISIONS	DATE
SEPARATED RAILROAD SHEET	06/02/08
REVISED RPM DETAILS	07/1/12

LakeCounty Division of Transportation

APPROVED BY: A. KHAWAJA
DATE: APRIL 1, 2007

TYPICAL PAVEMENT MARKINGS FOR COUNTY HIGHWAYS

SHEET 2 OF 2

LC7800

REVISIONS / REMARKS					
NO.	DESCRIPTION	DATE	BY	SURVEYOR:	___/___
		___/___/___		DSGNR/LIAISON:	___
		___/___/___		PLOTTED BY:	khd18691 8/23/2016

MICROSURFACING 2016
ROLLINS ROAD (HOOK DRIVE TO IL 132)

LakeCounty Division of Transportation

LCDOT STANDARDS & DETAILS

ROUTE	SECTION	SECTION NUMBER	SHEET	SHEETS
CH31	80	16-00080-61-RS	46	66

FILE NAME: U:\Design\Russo\16-00080-61-RS Microsurfacing 2016\CAD\16-00080-61-RS.dgn

TYPICAL SHORT TERM PAVEMENT MARKINGS

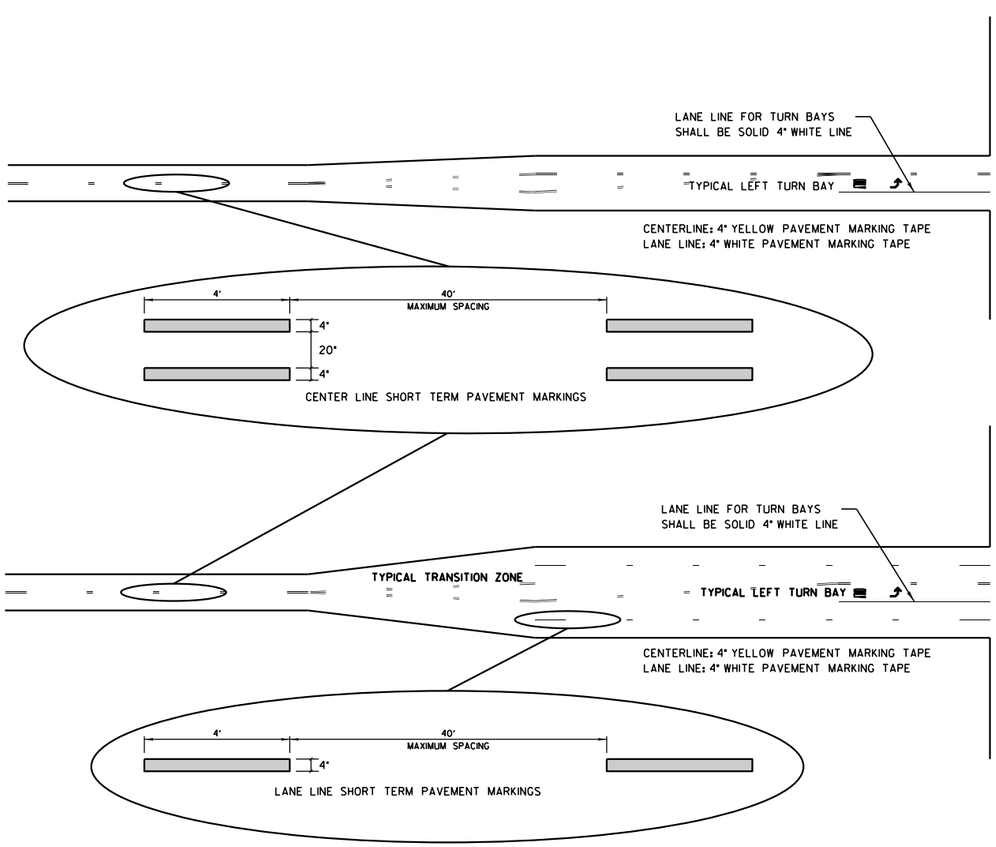

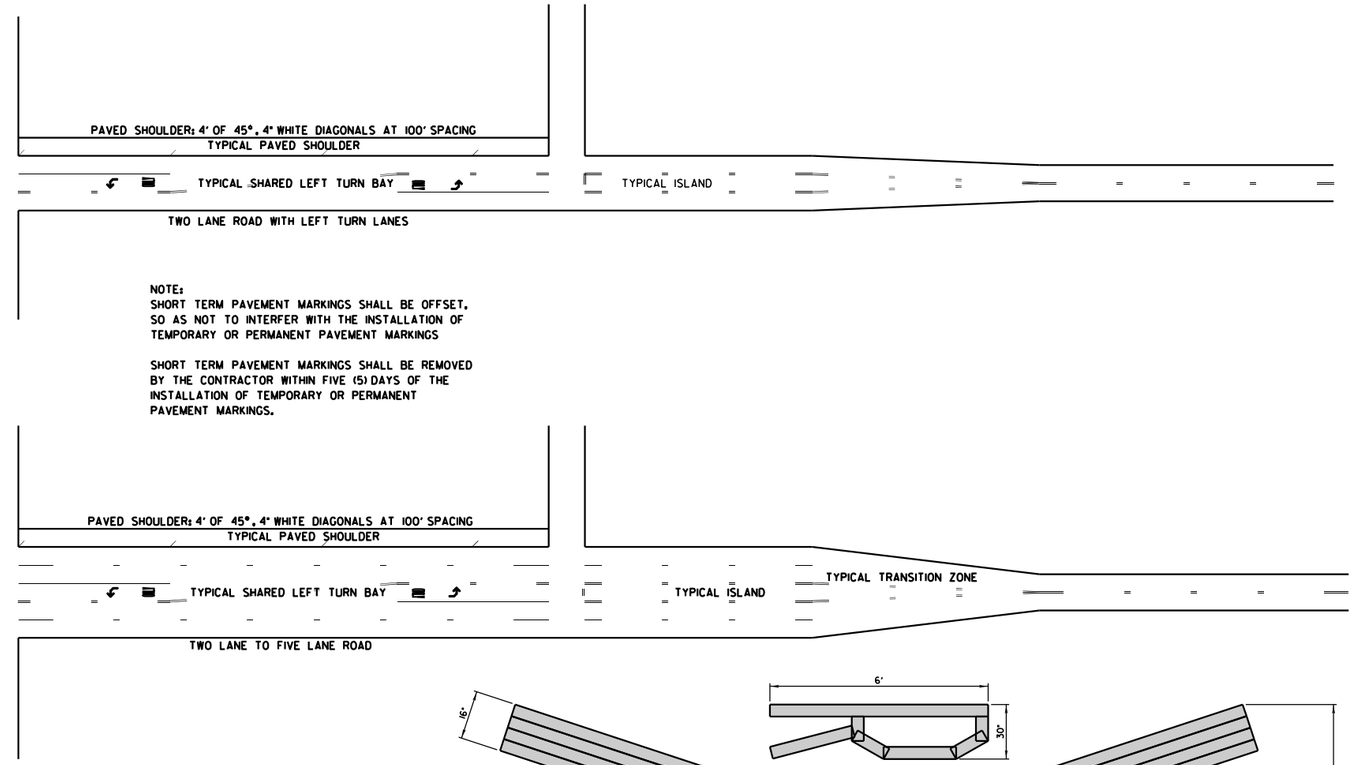

NOTE:
SHORT TERM PAVEMENT MARKINGS SHALL BE OFFSET, SO AS NOT TO INTERFER WITH THE INSTALLATION OF TEMPORARY OR PERMANENT PAVEMENT MARKINGS

SHORT TERM PAVEMENT MARKINGS SHALL BE REMOVED BY THE CONTRACTOR WITHIN FIVE (5) DAYS OF THE INSTALLATION OF TEMPORARY OR PERMANENT PAVEMENT MARKINGS.

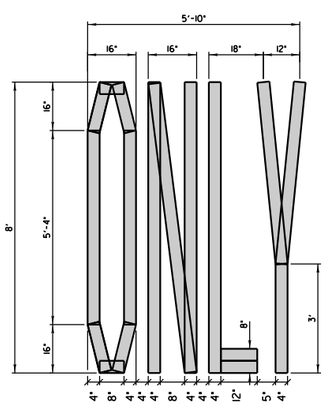

QUANTITY:
4" LINE = 64 FT. (21 SQ. FT.)

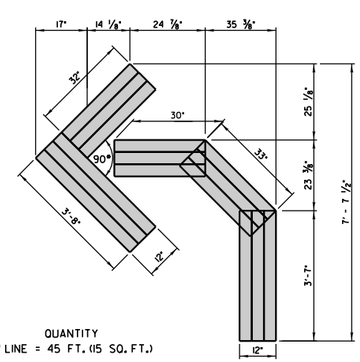

QUANTITY
4" LINE = 45 FT. (15 SQ. FT.)

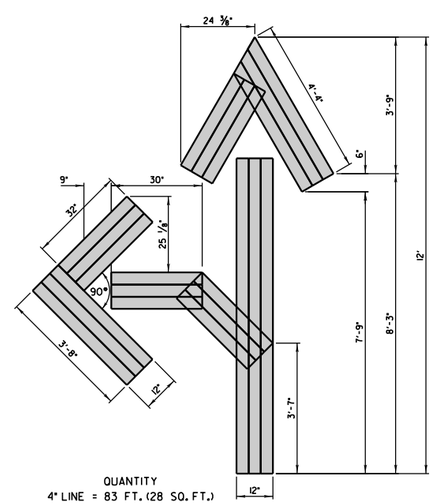

QUANTITY
4" LINE = 83 FT. (28 SQ. FT.)

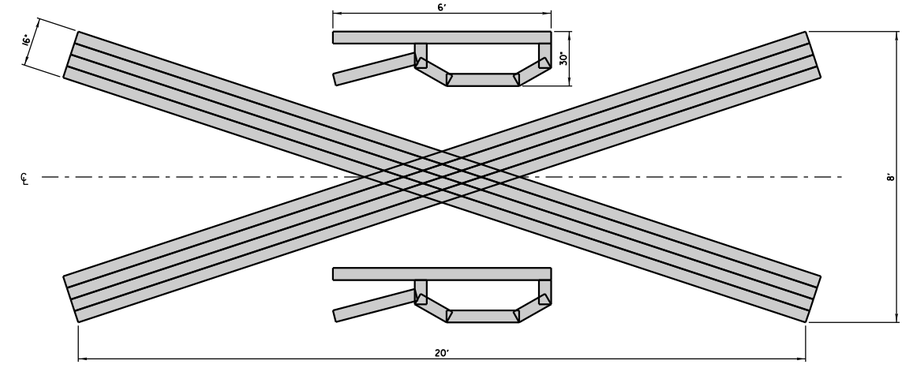

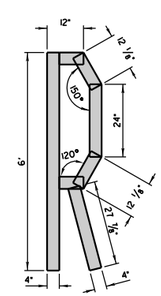

QUANTITY
4" LINE = 200 FT. (67 SQ. FT.)
("X" = 172 FT.)
("R" = 14 FT.)

REVISIONS	DATE
REMOVE DUAL DIMENSIONS	2/18/08

LakeCounty
Division of Transportation

APPROVED BY: A. KHAWAJA
DATE: APRIL 1, 2007

SHORT TERM PAVEMENT MARKINGS

LC7802

REVISIONS / REMARKS					
NO.	DESCRIPTION	DATE	BY	SURVEYOR:	___/___
		___/___/___	___	DSGNR/LIAISON:	___/___
		___/___/___	___	PLOTTED BY:	khd18691 8/23/2016

MICROSURFACING 2016
ROLLINS ROAD (HOOK DRIVE TO IL 132)

LakeCounty
Division of Transportation

LCDOT STANDARDS & DETAILS

ROUTE	SECTION	SECTION NUMBER	SHEET	SHEETS
CH31	80	16-00080-61-RS	47	66

FILE NAME: U:\Design\Russo\16-00080-61-RS Microsurfacing 2016\CAD\16-00080-61-RS.dgn

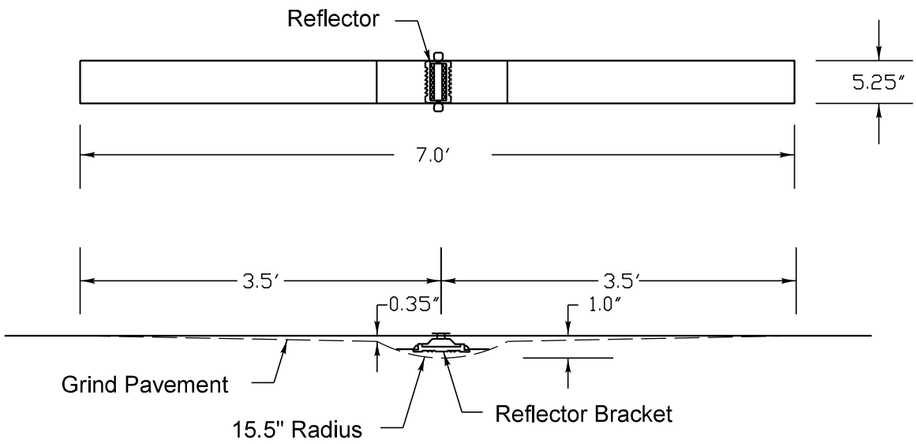

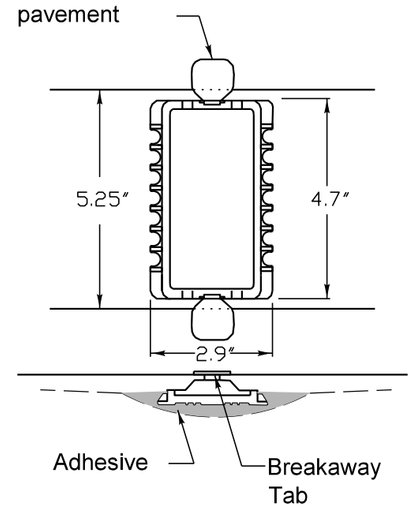

Reflector Bracket Detail

Notes

1. The reflective pavement marker lens shall be a 3M 190 series pavement marker or an approved equal.

2. The reflector bracket shall be made of a polycarbonate and shall be a MarkerOne Series R100 or an approved equal.

3. The adhesive used shall meet the requirements of AASHTO M237 specification for adhesives to be used in cementing asphalt surfaces.

4. Markers shall be placed at 40' intervals on lane lines and painted medians and 40' intervals on curves and approaching intersections as shown on LCDOT standard LC7800.

REVISIONS	DATE

LakeCounty Division of Transportation

APPROVED BY: JN
DATE: 12/02/13

RECESSED REFLECTIVE PAVEMENT MARKER

LC7805

NO.	REVISIONS / REMARKS DESCRIPTION	DATE	BY
		/ /	
		/ /	
		/ /	
		/ /	
		/ /	
		/ /	
		/ /	
		/ /	

SURVEYOR: DSGNR/LIAISON: PLOTTED BY: khn8659 8/23/2016

FILE NAME: U:\Design\Russo\16-00080-61-RS Microsurfacing 2016\CAD\16-00080-61-RS.dgn

MICROSURFACING 2016
ROLLINS ROAD (HOOK DRIVE TO IL 132)

LakeCounty Division of Transportation

LCDOT STANDARDS & DETAILS

ROUTE	SECTION	SECTION NUMBER	SHEET	SHEETS
CH31	80	16-00080-61-RS	48	66

ABV	ABOVE
A/C	ACCESS CONTROL
AC	ACRE
ADJ	ADJUST
AS	AERIAL SURVEYS
AGG	AGGREGATE
AH	AHEAD
APT	APARTMENT
ASPH	ASPHALT
AUX	AUXILIARY
AGS	AUXILIARY GAS VALVE (SERVICE)
AVE	AVENUE
AX	AXIS OF ROTATION
BK	BACK
B-B	BACK TO BACK
BKPL	BACKPLATE
B	BARN
BARR	BARRICADE
BGN	BEGIN
BM	BENCHMARK
BIND	BINDER
BIT	BITUMINOUS
BTM	BOTTOM
BLVD	BOULEVARD
BRK	BRICK
BBOX	BUFFALO BOX
BLDG	BUILDING
CIP	CAST IRON PIPE
CB	CATCH BASIN
C-C	CENTER TO CENTER
CL	CENTERLINE OR CLEARANCE
CL-E	CENTERLINE TO EDGE
CL-F	CENTERLINE TO FACE
CTS	CENTERS
CERT	CERTIFIED
CHSLD	CHISELED
CS	CITY STREET
CP	CLAY PIPE
CLSD	CLOSED
CLID	CLOSED LID
CT	COAT OR COURT
COMB	COMBINATION
C	COMMERCIAL BUILDING
CE	COMMERCIAL ENTRANCE
CONC	CONCRETE
CONST	CONSTRUCT
CONTD	CONTINUED
CONT	CONTINUOUS
COR	CORNER
CORR	CORRUGATED
CMP	CORRUGATED METAL PIPE
CNTY	COUNTY
CH	COUNTY HIGHWAY
CSE	COURSE
XSECT	CROSS SECTION
m^3	CUBIC METER
mm^3	CUBIC MILLIMETER
CU YD	CUBIC YARD
CULV	CULVERT
C&G	CURB & GUTTER
D	DEGREE OF CURVE
DC	DEPRESSED CURVE
DET	DETECTOR
DIA	DIAMETER
DIST	DISTRICT
DOM	DOMESTIC
DBL	DOUBLE
DSEL	DOWNSTREAM ELEVATION
DSFL	DOWNSTREAM FLOWLINE
DR	DRAINAGE OR DRIVE
DI	DRAINAGE INLET OR DROP INLET
DRV	DRIVEWAY
DCT	DUCT
EA	EACH
EB	EASTBOUND
EOP	EDGE OF PAVEMENT
E-CL	EDGE TO CENTERLINE
E-E	EDGE TO EDGE
EL	ELEVATION
ENTR	ENTRANCE
EXC	EXCAVATION
EX	EXISTING
EXPWAY	EXPRESSWAY
E	EXTERNAL DISTANCE OF HORIZONTAL CURVE
E	OFFSET DISTANCE TO VERTICAL CURVE
F-F	FACE TO FACE
FA	FEDERAL AID
FAI	FEDERAL AID INTERSTATE
FAP	FEDERAL AID PRIMARY
FAS	FEDERAL AID SECONDARY
FAUS	FEDERAL AID URBAN SECONDARY
FP	FENCE POST
FE	FIELD ENTRANCE
FH	FIRE HYDRANT
FL	FLOW LINE
FB	FOOT BRIDGE
FDN	FOUNDATION
FR	FRAME
F&G	FRAME & GRATE
FRWAY	FREEWAY
GAL	GALLON
GALV	GALVANIZED
G	GARAGE
GM	GAS METER
GV	GAS VALVE
GRAN	GRANULAR
GR	GRATE
GRVL	GRAVEL
GND	GROUND
GUT	GUTTER
GP	GUY POLE
GW	GUY WIRE
HH	HANDHOLE
HATCH	HATCHING
HD	HEAD
HDW	HEADWALL
HDUTY	HEAVY DUTY
ha	HECTARE
HMA	HOT MIX ASPHALT
HWY	HIGHWAY
HORIZ	HORIZONTAL
HSE	HOUSE
IL	ILLINOIS
IMP	IMPROVEMENT
IN DIA	INCH DIAMETER
INL	INLET
INST	INSTALLATION
IDS	INTERSECTION DESIGN STUDY
INV	INVERT
IP	IRON PIPE
IR	IRON ROD
JT	JOINT
kg	KILOGRAM
km	KILOMETER
LS	LANDSCAPING
LN	LANE
LT	LEFT
LP	LIGHT POLE
LGT	LIGHTING
LF	LINEAL FEET OR LINEAR FEET
L	LITER OR CURVE LENGTH
LC	LONG CHORD
LNG	LONGITUDINAL
L SUM	LUMP SUM
MACH	MACHINE
MB	MAIL BOX
MH	MANHOLE
MATL	MATERIAL
MED	MEDIAN
m	METER
METH	METHOD
M	MID-ORDINATE
mm	MILLIMETER
mm DIA	MILLIMETER DIAMETER
MIX	MIXTURE
MBH	MOBILE HOME
MOD	MODIFIED
MFT	MOTOR FUEL TAX
N & BC	NAIL & BOTTLE CAP
N & C	NAIL & CAP
N & W	NAIL & WASHER
NOAA	NATIONAL OCEANIC ATMOSPHERIC ADMINISTRATION
NC	NORMAL CROWN
NB	NORTHBOUND
NE	NORTHEAST
NW	NORTHWEST
OLID	OPEN LID
PAT	PATTERN
PVD	PAVED
PVMT	PAVEMENT
PM	PAVEMENT MARKING
PED	PEDESTAL
PNT	POINT
PC	POINT OF CURVATURE
PI	POINT OF INTERSECTION OF HORIZONTAL CURVE
PRC	POINT OF REVERSE CURVE
PT	POINT OF TANGENCY
POT	POINT ON TANGENT
POLYETH	POLYETHYLENE
PCC	PORTLAND CEMENT CONCRETE
PP	POWER POLE OR PRINCIPAL POINT
PRM	PRIME
PE	PRIVATE ENTRANCE
PROF	PROFILE
PGL	PROFILE GRADELINE
PROJ	PROJECT
P.C.	PROPERTY CORNER
PL	PROPERTY LINE
PR	PROPOSED
R	RADIUS
RR	RAILROAD
RRS	RAILROAD SPIKE
RPS	REFERENCE POINT STAKE
REF	REFLECTIVE
RCCP	REINFORCED CONCRETE CULVERT PIPE
REINF	REINFORCEMENT
REM	REMOVAL
RC	REMOVE CROWN
REP	REPLACEMENT
REST	RESTAURANT
RESURF	RESURFACING
RET	RETAINING
RT	RIGHT
ROW	RIGHT-OF-WAY
RD	ROAD
RDWY	ROADWAY
RTE	ROUTE
SAN	SANITARY
SANS	SANITARY SEWER
SEC	SECTION
SEED	SEEDING
SHAP	SHAPING
S	SHED
SH	SHEET
SHLD	SHOULDER
SW	SIDEWALK OR SOUTHWEST
SIG	SIGNAL
SOD	SODDING
SM	SOLID MEDIAN
SB	SOUTHBOUND
SE	SOUTHEAST
SPL	SPECIAL
SD	SPECIAL DITCH
SQ FT	SQUARE FEET
m^2	SQUARE METER
mm^2	SQUARE MILLIMETER
SQ YD	SQUARE YARD
STB	STABILIZED
STD	STANDARD
SBI	STATE BOND ISSUE
SR	STATE ROUTE
STA	STATION
SPBGR	STEEL PLATE BEAM GUARDRAIL
SS	STORM SEWER
STY	STORY
ST	STREET
STR	STRUCTURE
e	SUPERELEVATION RATE
S.E. RUN.	SUPERELEVATION RUNOFF LENGTH
SURF	SURFACE
SMK	SURVEY MARKER
T	TANGENT DISTANCE
T.R.	TANGENT RUNOUT DISTANCE
TEL	TELEPHONE
TB	TELEPHONE BOX
TP	TELEPHONE POLE
TEMP	TEMPORARY
TBM	TEMPORARY BENCH MARK
TD	TILE DRAIN
TBE	TO BE EXTENDED
TBR	TO BE REMOVED
TBS	TO BE SAVED
TWP	TOWNSHIP
TR	TOWNSHIP ROAD
TS	TRAFFIC SIGNAL
TSCB	TRAFFIC SIGNAL CONTROL BOX
TSC	TRAFFIC SYSTEMS CENTER
TRVS	TRANSVERSE
TRVL	TRAVEL
TRN	TURN
TY	TYPE
T-A	TYPE A
TYP	TYPICAL
UNDGND	UNDERGROUND
USGS	U.S. GEOLOGICAL SURVEY
USEL	UPSTREAM ELEVATION
USFL	UPSTREAM FLOWLINE
UTIL	UTILITY
VBOX	VALVE BOX
VV	VALVE VAULT
VLT	VAULT
VEH	VEHICLE
VP	VENT PIPE
VERT	VERTICAL
VC	VERTICAL CURVE
VPC	VERTICAL POINT OF CURVATURE
VPI	VERTICAL POINT OF INTERSECTION
VPT	VERTICAL POINT OF TANGENCY
WM	WATER METER
WV	WATER VALVE
WMAIN	WATER MAIN
WB	WESTBOUND
WILDFL	WILDFLOWERS
W	WITH
WO	WITHOUT

Illinois Department of Transportation

PASSED January 1, 2011
Michael Brand
ENGINEER OF POLICY AND PROCEDURES

APPROVED January 1, 2011
ENGINEER OF DESIGN AND ENVIRONMENT

ISSUED 1-1-97

DATE	REVISIONS
1-1-11	Updated abbreviations
	and symbols.
1-1-08	Updated abbreviations
	and symbols.

STANDARD SYMBOLS, ABBREVIATIONS AND PATTERNS

(Sheet 1 of 8)

STANDARD 000001–06

ADJUSTMENT ITEMS

	EX	PR
Structure To Be Adjusted		ADJ
Structure To Be Cleaned		C
Main Structure To Be Filled		FM
Structure To Be Filled		F
Structure To Be Filled Special		FSP
Structure To Be Removed		R
Structure To Be Reconstructed		REC
Structure To Be Reconstructed Special		RSP
Frame and Grate To Be Adjusted		A
Frame and Lid To Be Adjusted		A
Domestic Service Box To Be Adjusted		A
Valve Vault To Be Adjusted		A
Special Adjustment		SP
Item To Be Abandoned		AB
Item To Be Moved		M
Item To Be Relocated		REL
Pavement Removal and Replacement		

Illinois Department of Transportation

PASSED January 1, 2011

Michael Brand

ENGINEER OF POLICY AND PROCEDURES

APPROVED January 1, 2011

ENGINEER OF DESIGN AND ENVIRONMENT

ISSUED 1-1-97

ALIGNMENT ITEMS

	EX	PR
Baseline		
Centerline		
Centerline Break Circle		
Baseline Symbol		
Centerline Symbol		
PI Indicator		
Point Indicator		
Horizontal Curve Data (Half Size)	CURVE P.I. STA= Δ= D= R= T= L= E= e= T.R.= S.E. RUN= P.C. STA= P.T. STA=	CURVE P.I. STA= Δ= D= R= T= L= E= e= T.R.= S.E. RUN= P.C. STA= P.T. STA=

BOUNDARIES ITEMS

	EX	PR
Dashed Property Line		
Solid Property/Lot Line		
Section/Grant Line		
Quarter Section Line		
Quarter/Quarter Section Line		
County/Township Line		
State Line		
Iron Pipe Found		
Iron Pipe Set		
Survey Marker		
Property Line Symbol		
Same Ownership Symbol (Half Size)		
Northwest Quarter Corner (Half Size)		
Section Corner (Half Size)		
Southeast Quarter Corner (Half Size)		

CONTOUR ITEMS

	EX	PR
Approx. Index Line		
Approx. Intermediate Line		
Index Contour		
Intermediate Contour		

DRAINAGE ITEMS

	EX	PR
Channel or Stream Line		
Culvert Line		
Grading & Shaping Ditches		
Drainage Boundary Line		
Paved Ditch		
Aggregate Ditch		
Pipe Underdrain		
Storm Sewer		
Flowline		
Ditch Check		
Headwall		
Inlet		
Manhole		
Summit		
Roadway Ditch Flow		
Swale		
Catch Basin		
Culvert End Section		
Water Surface Indicator		
Riprap		

STANDARD SYMBOLS, ABBREVIATIONS AND PATTERNS

(Sheet 2 of 8)

STANDARD 000001–06

EROSION & SEDIMENT CONTROL ITEMS

	EX	PR
Cleaning & Grading Limits		
Dike		
Erosion Control Fence		
Perimeter Erosion Barrier		
Temporary Fence		
Ditch Check Temporary		
Ditch Check Permanent		
Inlet & Pipe Protection		
Sediment Basin		
Erosion Control Blanket		
Fabric Formed Concrete Revetment Mat		
Turf Reinforcement Mat		
Mulch Temporary		
Mulch Method 1		
Mulch Method 2 Stabilized		
Mulch Method 3 Hydraulic		

NON–HIGHWAY IMPROVEMENT ITEMS

	EX	PR
Noise Attn./Levee		
Field Line		
Fence		
Base of Levee		
Mailbox		
Multiple Mailboxes		
Pay Telephone		
Advertising Sign		

LANDSCAPING ITEMS

	EX	PR
Contour Mounding Line		
Fence		
Fence Post		
Shrubs		
Mowline		
Perennial Plants		
Seeding Class 2		
Seeding Class 2A		
Seeding Class 4		
Seeding Class 4 & 5 Combined		

EXISTING LANDSCAPING ITEMS (contd.)

	EX	PR
Seeding Class 5		
Seeding Class 7		
Seedlings Type 1		
Seedlings Type 2		
Sodding		
Mowstake w/Sign		
Tree Trunk Protection		
Evergreen Tree	E	
Shade Tree	E	+

LIGHTING

	EX	PR
Duct		
Conduit		
Electrical Aerial Cable	A	A
Electrical Buried Cable	L	L
Controller		
Underpass Luminaire		
Power Pole		

Illinois Department of Transportation

PASSED January 1, 2011
Michael Brand
ENGINEER OF POLICY AND PROCEDURES
APPROVED January 1, 2011
Scott E. Byers
ENGINEER OF DESIGN AND ENVIRONMENT

ISSUED 1-1-97

STANDARD SYMBOLS, ABBREVIATIONS AND PATTERNS

(Sheet 3 of 8)

STANDARD 000001–06

LIGHTING (contd.)

	EX	PR
Pull Point	Ⓟ	Ⓟ
Handhole		
Heavy Duty Handhole	H	H
Junction Box		
Light Unit Comb.		
Electrical Ground		
Traffic Flow Arrow		
High Mast Pole (Half Size)		
Light Unit-1		

PAVEMENT (MISC.)

	EX	PR
Keyed Long. Joint		
Keyed Long. Joint w/Tie Bars		
Sawed Long. Joint w/Tie Bars		
Bituminous Shoulder		
Bituminous Taper		
Stabilized Driveway		
Widening		

PAVEMENT MARKINGS

	EX	PR
Bike Lane Symbol		
Bike Lane Text		BIKE LANE
Handicap Symbol		
RR Crossing		RR
Raised Marker Amber 1 Way		
Raised Marker Amber 2 Way		
Raised Marker Crystal 1 Way		
Two Way Turn Left		
Shoulder Diag. Pattern		
Skip-Dash White		
Skip-Dash Yellow		
Stop Line		
Solid Line		
Double Centerline		
Dotted Lines		
CL 2Ln 2Way RRPM 12.2 m (40') o.c.		
CL 2Ln 2Way RRPM 80' (24.4 m) o.c.		
CL Multilane Div. RRPM 40' (12.2 m) o.c.		
CL Multilane Div. RRPM 80' (24.4 m) o.c.		
CL Multilane Div. Dbl. RRPM 80' (24.4 m) o.c.		
CL Multilane Undiv.		
Two Way Turn Left Line		

Illinois Department of Transportation

PASSED January 1, 2011
Michael Brand
ENGINEER OF POLICY AND PROCEDURES

APPROVED January 1, 2011
Scott E. Stokes
ENGINEER OF DESIGN AND ENVIRONMENT

ISSUED 1-1-97

STANDARD SYMBOLS, ABBREVIATIONS AND PATTERNS

(Sheet 4 of 8)

STANDARD 000001–06

PAVEMENT MARKINGS (contd.)

	EX	PR
Urban Combination Left		
Urban Combination Right		
Urban Left Turn Arrow		
Urban Right Turn Arrow		
Urban Left Turn Only		ONLY
Urban Right Turn Only		ONLY
Urban Thru Only		ONLY
Urban U-Turn		
Urban Combined U-Turn		
Rural Combination Left		
Rural Combination Right		
Rural Left Turn Arrow		
Rural Right Turn Arrow		
Rural Left Turn Only		ONLY
Rural Right Turn Only		ONLY
Rural Thru Only		ONLY

RAILROAD ITEMS

	EX	PR
Abandoned Railroad		
Railroad		
Railroad Point		
Control Box		
Crossing Gate		
Flashing Signal		
Railroad Cant. Mast Arm		
Crossbuck		

REMOVAL ITEMS

	EX	PR
Removal Tic		
Bituminous Removal		
Hatch Pattern		
Tree Removal Single		

RIGHT OF WAY ITEMS

	EX	PR
Future ROW Corner Monument		
ROW Marker		
ROW Line		
Easement		
Temporary Easement		

Illinois Department of Transportation

PASSED January 1, 2011
Michael Brand
ENGINEER OF POLICY AND PROCEDURES

APPROVED January 1, 2011
Scott E. Stokes
ENGINEER OF DESIGN AND ENVIRONMENT

ISSUED 1-1-97

STANDARD SYMBOLS, ABBREVIATIONS AND PATTERNS

(Sheet 5 of 8)

STANDARD 000001–06

RIGHT OF WAY ITEMS (contd.)

	EX	PR
Access Control Line	AC	AC
Access Control Line & ROW	AC	AC
Access Control Line & ROW with Fence	AR	AC
Excess ROW Line		XS

ROADWAY PLAN ITEMS

	EX	PR
Cable Barrier		
Concrete Barrier		
Edge of Pavement		
Bit Shoulders, Medians and C&G Line		
Aggregate Shoulder		
Sidewalks, Driveways		
Guardrail		
Guardrail Post		
Traffic Sign		
Corrugated Median		
Impact Attenuator		
North Arrow with District Office (Half Size)	N	
Match Line		STA. 45+00
Slope Limit Line		
Typical Cross-Section Line		

ROADWAY PROFILES

	EX	PR
P.I. Indicator		
Point Indicator		
Earthworks Balance Point		
Begin Point		
Vert. Curve Data	VPI = ELEV= L = E =	VPI = ELEV= L = E =
Ditch Profile Left Side		
Ditch Profile Right Side		
Roadway Profile Line		
Storm Sewer Profile Left Side		
Storm Sewer Profile Right Side		

SIGNING ITEMS

	EX	PR
Cone, Drum or Barricade		
Barricade Type II		
Barricade Type III		
Barricade With Edge Line		
Flashing Light Sign		
Panels I		
Panels II		
Direction of Traffic		
Sign Flag (Half Size)		

SIGNING ITEMS (contd.)

	EX	PR
Reverse Left W1-4L (Half Size)		
Reverse Right W1-4R (Half Size)		
Two Way Traffic Sign W6-3 (Half Size)		
Detour Ahead W20-2(0) (Half Size)		DETOUR AHEAD
Left Lane Closed Ahead W20-5L(0) (Half Size)		LEFT LANE CLOSED AHEAD
Right Lane Closed Ahead W20-5R(0) (Half Size)		RIGHT LANE CLOSED AHEAD
Road Closed Ahead W20-3(0) (Half Size)		ROAD CLOSED AHEAD
Road Construction Ahead W20-1-(0) (Half Size)		ROAD CONSTRUCTION AHEAD
Single Lane Ahead (Half Size)		SINGLE LANE AHEAD
Transition Left W4-2L (Half Size)		
Transition Right W4-2R (Half Size)		

Illinois Department of Transportation

PASSED January 1, 2011
Michael Brand
ENGINEER OF POLICY AND PROCEDURES

APPROVED January 1, 2011
ENGINEER OF DESIGN AND ENVIRONMENT

ISSUED 1-1-97

STANDARD SYMBOLS, ABBREVIATIONS AND PATTERNS

(Sheet 6 of 8)

STANDARD 000001–06

SIGNING ITEMS (contd.)

	EX	PR
One Way Arrow Lrg. W1-6-(0) (Half Size)		
Two Way Arrow Large W1-7-(0) (Half Size)		
Detour M4-10L-(0) (Half Size)		DETOUR
Detour M4-10R-(0) (Half Size)		DETOUR
One Way Left R6-1L (Half Size)		ONE WAY
One Way Right R6-1R (Half Size)		ONE WAY
Left Turn Lane R3-I100L (Half Size)		LEFT TURN LANE
Keep Left R4-7AL (Half Size)		KEEP LEFT
Keep Left R4-7BL (Half Size)		KEEP LEFT
Keep Right R4-7AR (Half Size)		KEEP RIGHT
Keep Right R4-7BR (Half Size)		KEEP RIGHT
Stop Here On Red R10-6-AL (Half Size)		STOP HERE ON RED
Stop Here On Red R10-6-AR (Half Size)		STOP HERE ON RED
No Left Turn R3-2 (Half Size)		
No Right Turn R3-1 (Half Size)		
Road Closed R11-2 (Half Size)		ROAD CLOSED
Road Closed Thru Traffic R11-2 (Half Size)		ROAD CLOSED TO THRU TRAFFIC

STRUCTURES ITEMS

	EX	PR
Box Culvert Barrel		
Box Culvert Headwall		
Bridge Pier		
Bridge		
Retaining Wall		
Temporary Sheet Piling		

TRAFFIC SHEET ITEMS

	EX	PR
Cable Number		
Left Turn Green	G	G
Left Turn Yellow	Y	Y
Signal Backplate		
Signal Section 8" (200 mm)		
Signal Section 12" (300 mm)		
Walk/Don't Walk Letters	DW W	DW W
Walk/Don't Walk Symbols		

TRAFFIC SIGNAL ITEMS

	EX	PR
Galv. Steel Conduit		
Underground Cable		
Detector Loop Line		
Detector Loop Large		
Detector Loop Small		
Detector Loop Quadrapole		

Illinois Department of Transportation

PASSED January 1, 2011

Michael Brand

ENGINEER OF POLICY AND PROCEDURES

APPROVED January 1, 2011

ENGINEER OF DESIGN AND ENVIRONMENT

ISSUED 1-1-97

STANDARD SYMBOLS, ABBREVIATIONS AND PATTERNS

(Sheet 7 of 8)

STANDARD 000001–06

TRAFFIC SIGNAL ITEMS (contd.)

	EX	PR
Detector Raceway	"E"	
Aluminum Mast Arm		
Steel Mast Arm		
Veh. Detector Magnetic		
Conduit Splice		
Controller		
Gulfbox Junction		
Wood Pole		
Temp. Signal Head		
Handhole		
Double Handhole		
Heavy Duty Handhole	H	H
Junction Box	J	J
Ped. Pushbutton Detector		
Ped. Signal Head		
Power Pole Service		
Priority Veh. Detector		
Signal Head		
Signal Head w/Backplate		
Signal Post		
Closed Circuit TV	C	C
Video Detector System	V	V

Illinois Department of Transportation

PASSED January 1, 2011
Michael Brand
ENGINEER OF POLICY AND PROCEDURES
APPROVED January 1, 2011
ENGINEER OF DESIGN AND ENVIRONMENT

ISSUED 1-1-97

UNDERGROUND UTILITY ITEMS

	EX	PR	ABANDONED
Cable TV	CTV	CTV	CTV
Electric Cable	E	E	E
Fiber Optic	FO	FO	FO
Gas Pipe	G	G	G
Oil Pipe	O	O	O
Sanitary Sewer			
Telephone Cable	T	T	T
Water Pipe	W	W	W

UTILITIES ITEMS

	EX	PR
Controller		
Double Handhole		
Fire Hydrant		
GuyWire or Deadman Anchor		
Handhole		
Heavy Duty Handhole	H	H
Junction Box	J	J
Light Pole		
Manhole		
Pipeline Warning Sign		
Power Pole		
Power Pole with Light		
Sanitary Sewer Cleanout		
Splice Box Above Ground		
Telephone Splice Box Above Ground		
Telephone Pole		

UTILITY ITEMS (contd.)

	EX	PR
Traffic Signal		
Traffic Signal Control Box	TS	
Water Meter		
Water Meter Valve Box		
Profile Line		
Aerial Power Line	A A	A A

VEGETATION ITEMS

	EX	PR
Deciduous Tree		
Bush or Shrub		
Evergreen Tree		
Stump		
Orchard/Nursery Line		
Vegetation Line		
Woods & Bush Line		

WATER FEATURE ITEMS

	EX	PR
Stream or Drainage Ditch		
Waters Edge		
Water Surface Indicator		
Water Point		
Disappearing Ditch		
Marsh		
Marsh/Swamp Boundary		

STANDARD SYMBOLS, ABBREVIATIONS AND PATTERNS

(Sheet 8 of 8)

STANDARD 000001–06

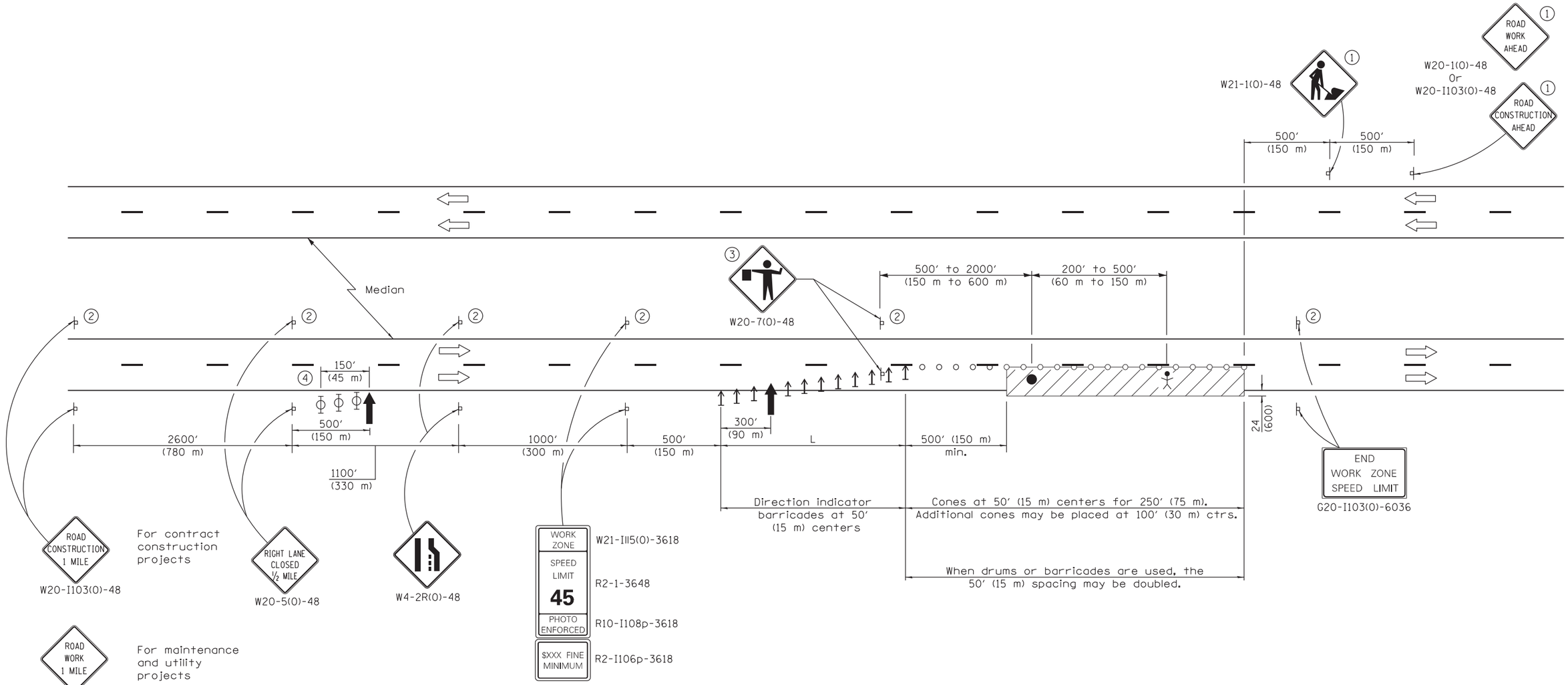

L = lane width X taper ratio	
Normal Posted Speed	Taper Ratio
mph	
55	55/1
45	45/1

TYPICAL APPLICATIONS

Pavement patch
Utility operations
Bituminous resurfacing

SYMBOLS

- Arrow board
- Work area
- Sign
- Direction indicator barricade
- Cone, drum or barricade
- Flagger with traffic control sign
- Worker
- Type II barricade, drum, or vertical barricade with monodirectional flashing light

(1) Undivided roadway only with left lane closure in opposite direction.

(2) Omitted when median is less than 10′ (3 m).

(3) FLAGGER signs shall be moved as necessary to maintain the required spacing between the sign and each separate work activity.

(4) Three Type II barricades, drums, or vertical barricades at 50′ (15 m) centers.

GENERAL NOTES

This Standard is used where at any time, any vehicle, equipment, workers or their activities will encroach on the lane adjacent to the shoulder, or on the shoulder within 24 (600) of the edge of pavement.

This Standard also applies when work is being performed in the left lane. Under these conditions, LEFT LANE CLOSED signs shall be substituted for RIGHT LANE CLOSED signs. On undivided highways, signs shall be added in the opposite direction as shown.

All dimensions are in inches (millimeters) unless otherwise shown.

Illinois Department of Transportation

APPROVED January 1, 2015
ENGINEER OF SAFETY ENGINEERING
APPROVED January 1, 2015
ENGINEER OF DESIGN AND ENVIRONMENT

ISSUED 4-1-04

DATE	REVISIONS
1-1-15	Revised END WORK ZONE SPEED
	LIMIT sign dimensions.
1-1-14	Revised workers sign number
	to agree withcurrent MUTCD.
	Rev. PHOTO ENFORCED sign no.

LANE CLOSURE, MULTILANE, DAY OPERATIONS ONLY, FOR SPEEDS ≥ 45 MPH TO 55 MPH

STANDARD 701421–07

SHEET 57 OF 66

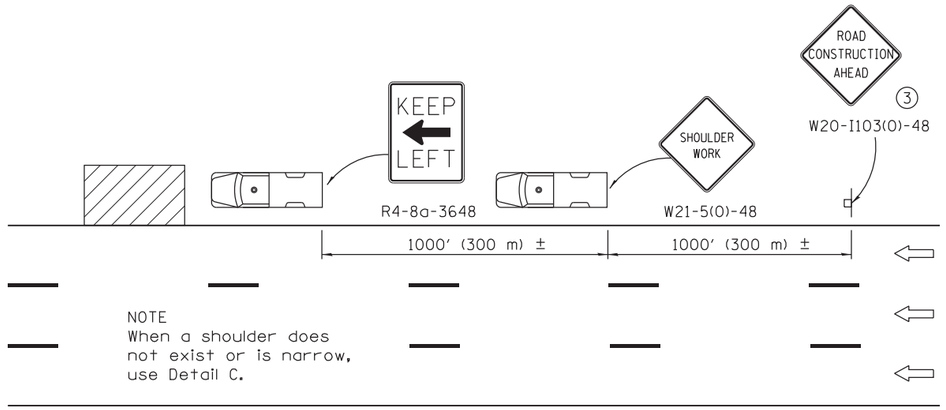

DETAIL A

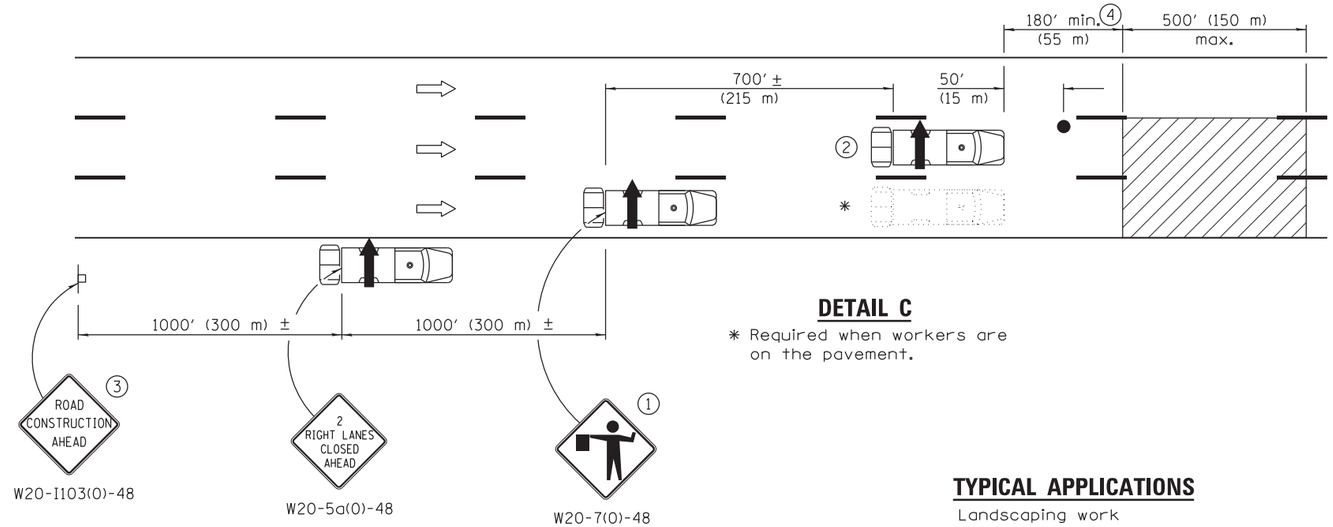

DETAIL C

* Required when workers are on the pavement.

TYPICAL APPLICATIONS

Landscaping work
Utility work
Pavement marking
Weed spraying
Roadometer measurements
Debris cleanup
Crack pouring

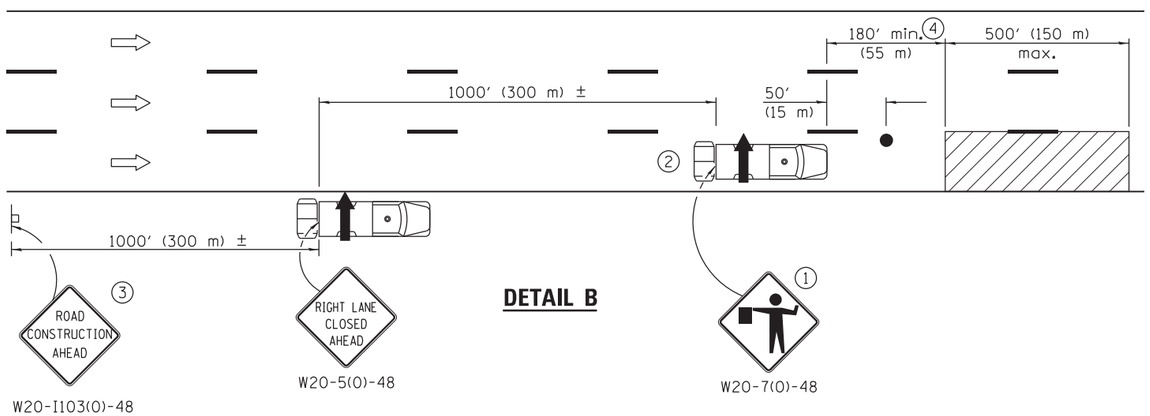

DETAIL B

① Flaggers are required when workers are on the pavement.

② For striping operations only. See sign arrow detail on this standard.

③ For stationary operations which are on the roadway or shoulder, greater than 15 minutes and up to 1 hour.

④ The distance between the work and the lead truck may vary according to terrain or paint/crack sealing drying time.

G20-I101-2430
(appropriate arrow)
②(when striping only)

GENERAL NOTES

This Standard is used where any vehicle, equipment, workers or their activities will require: 1) stationary operations up to 1 hour, or 2) a continuous or intermittent moving operation where the average speed of movement is greater than 1 mph (2 km/h).

This Standard is also applicable when work is being performed in the left lane(s) or on the median shoulder. Under these conditions, KEEP RIGHT signs shall be substituted for KEEP LEFT signs and arrow board indications shall be directed to the right.

All dimensions are in inches (millimeter) unless otherwise shown.

SYMBOLS

- Arrow board
- Work area
- Truck with flashing amber light
- Truck/Trailer mounted attenuator
- Flagger with traffic control sign
- Sign

Illinois Department of Transportation

APPROVED April 1, 2016
ENGINEER OF SAFETY ENGINEERING

APPROVED April 1, 2016
ENGINEER OF DESIGN AND ENVIRONMENT

ISSUED 1-1-97

DATE	REVISIONS
4-1-16	Added trailer option for
	attenuator symbol. Added
	note ④. Revised gen. notes.
1-1-15	Added general note
	regarding vehicle spacing.
	Corr. KEEP LEFT sign no.

LANE CLOSURE, MULTILANE, INTERMITTENT OR MOVING OPER., FOR SPEEDS ≥ 45 MPH

STANDARD 701426–08

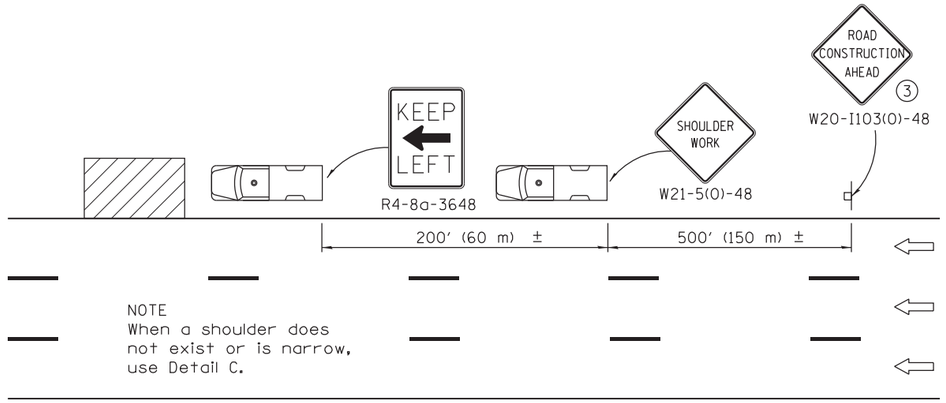

DETAIL A

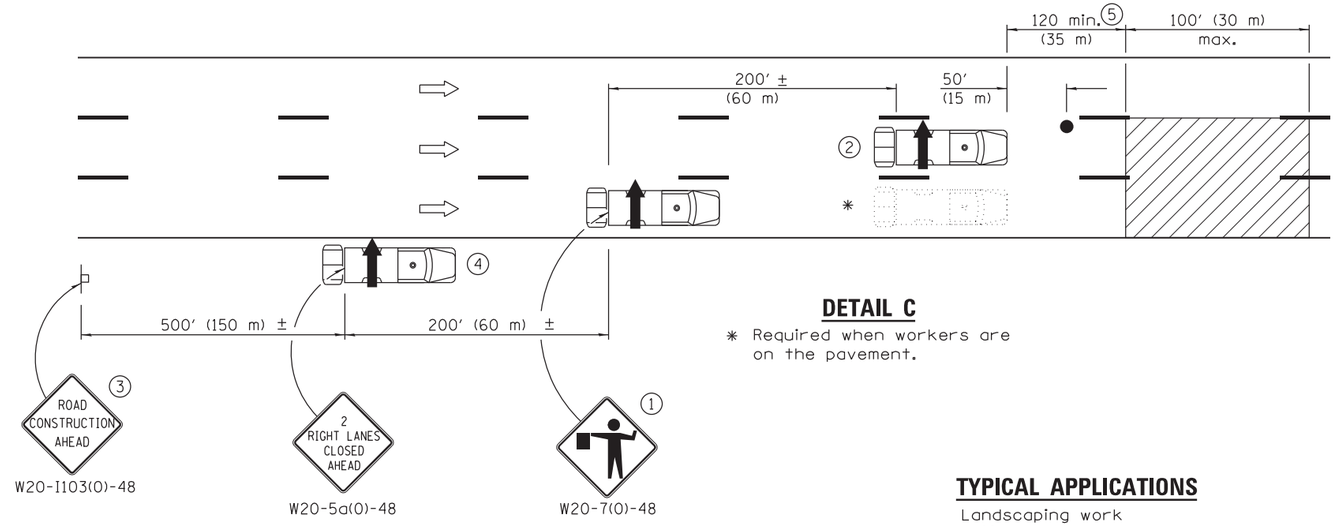

DETAIL C

* Required when workers are on the pavement.

TYPICAL APPLICATIONS

Landscaping work
Utility work
Pavement marking
Weed spraying
Roadometer measurements
Debris cleanup
Crack pouring

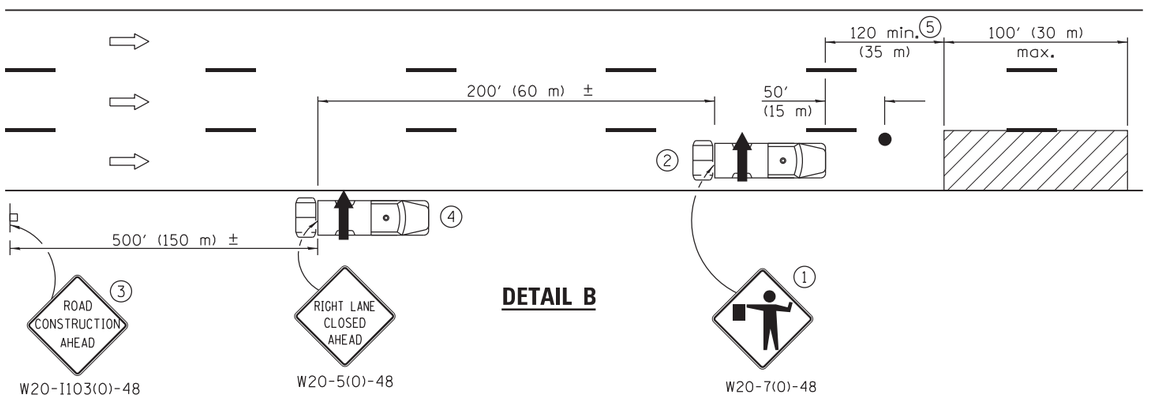

DETAIL B

① Flaggers are required when workers are on the pavement.

② For striping operations only. See sign arrow detail on this standard.

③ For stationary operations which are on the roadway or shoulder, greater than 15 minutes and up to 1 hour.

④ Omit truck, attenuator and arrow board when no shoulder exists due to curb and gutter.

⑤ The distance between the work and the lead truck may vary according to terrain or paint/crack sealing time.

G20-I101-2430
(appropriate arrow)
②(when striping only)

GENERAL NOTES

This Standard is used where any vehicle, equipment, workers or their activities will require: 1) stationary operations up to 1 hour, or 2) a continuous or intermittent moving operation where the average speed of movement is greater than 1 mph (2 km/h).

This Standard is also applicable when work is being performed in the left lane(s) or on the median shoulder. Under these conditions, KEEP RIGHT signs shall be substituted for KEEP LEFT signs and arrow board indications shall be directed to the right.

All dimensions are in inches (millimeter) unless otherwise shown.

SYMBOLS

- Arrow board
- Work area
- Truck with flashing amber light
- Truck/Trailer mounted attenuator
- Flagger with traffic control sign
- Sign

Illinois Department of Transportation

APPROVED April 1, 2016
ENGINEER OF SAFETY ENGINEERING

APPROVED April 1, 2016
ENGINEER OF DESIGN AND ENVIRONMENT

ISSUED 1-1-11

DATE	REVISIONS
4-1-16	Rev. gen. notes. Added
	note ⑤. Rev. dist. between
	work and lead truck.
1-1-15	Added general note
	regarding vehicle spacing.
	Corr. KEEP LEFT sign no.

LANE CLOSURE, MULTILANE, INTERMITTENT OR MOVING OPER., FOR SPEEDS ≤ 40 MPH

STANDARD 701427–04

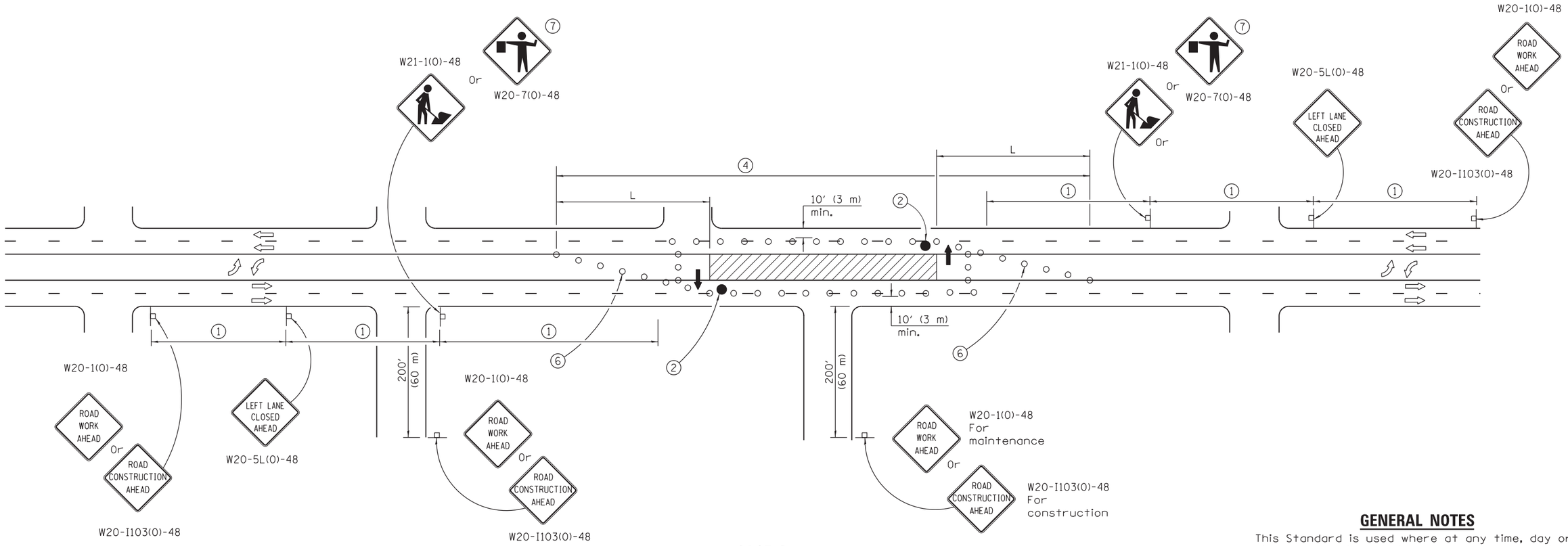

CASE I

1. Refer to SIGN SPACING TABLE for distances.
2. Required for speeds > 40 mph (70 km/h).
3. Required if work exceeds 500' (164 m) or 1 block, repeat every 1 mile (1.6 km).
4. Cones at 25' (8 m) centers for 250' (75 m). Additional cones may be placed at 50' (15 m) centers. When drums or type I or II barricades are used, the interval between devices may be doubled.
5. For approved sideroad closures.
6. Cones, drums or barricades at 20' (6 m) centers in taper.
7. Use flagger sign only when flagger is present.

SIGN SPACING	
Posted Speed	Sign Spacing
55	500' (150 m)
50-45	350' (100 m)
<45	200' (60 m)

SYMBOLS

- Arrow board
- Work area
- Barricade or drum with steady burning mondirectional light
- Flagger with traffic control sign
- Cone, drum or barricade (Cones for daytime use only)
- Sign on portable or permanent support
- Type III Barricade

GENERAL NOTES

This Standard is used where at any time, day or night, any vehicle, equipment, workers or their activities encroach on the pavement requiring the closure of one traffic lane in an Urban area.

If the work operation is performed between 9:00 a.m. and 3:00 p.m. and does not exceed 15 min. Traffic protection shall be as shown for Standard 701426.

Calculate L as follows:

SPEED LIMIT	FORMULAS English	FORMULAS (Metric)
40 mph (70 km/h) or less:	$L = \frac{WS^2}{60}$	$L = \frac{WS^2}{150}$
45 mph (80 km/h) or greater:	L=(W)(S)	L=0.65(W)(S)

W = Width of offset in feet (meters).

S = Normal posted speed mph (km/h).

All dimensions are in inches (millimeters) unless otherwise shown.

Illinois Department of Transportation

APPROVED January 1, 2014
ENGINEER OF SAFETY ENGINEERING
APPROVED January 1, 2014
ENGINEER OF DESIGN AND ENVIRONMENT

ISSUED 1-1-10

DATE	REVISIONS
1-1-14	Omitted original note 4.
	Rev. workers sign no. to
	agree with current MUTCD.
1-1-13	Omitted text 'WORKERS'
	sign.

URBAN LANE CLOSURE, MULTILANE, 2W WITH BIDIRECTIONAL LEFT TURN LANE

(Sheet 1 of 4)

STANDARD 701602–07

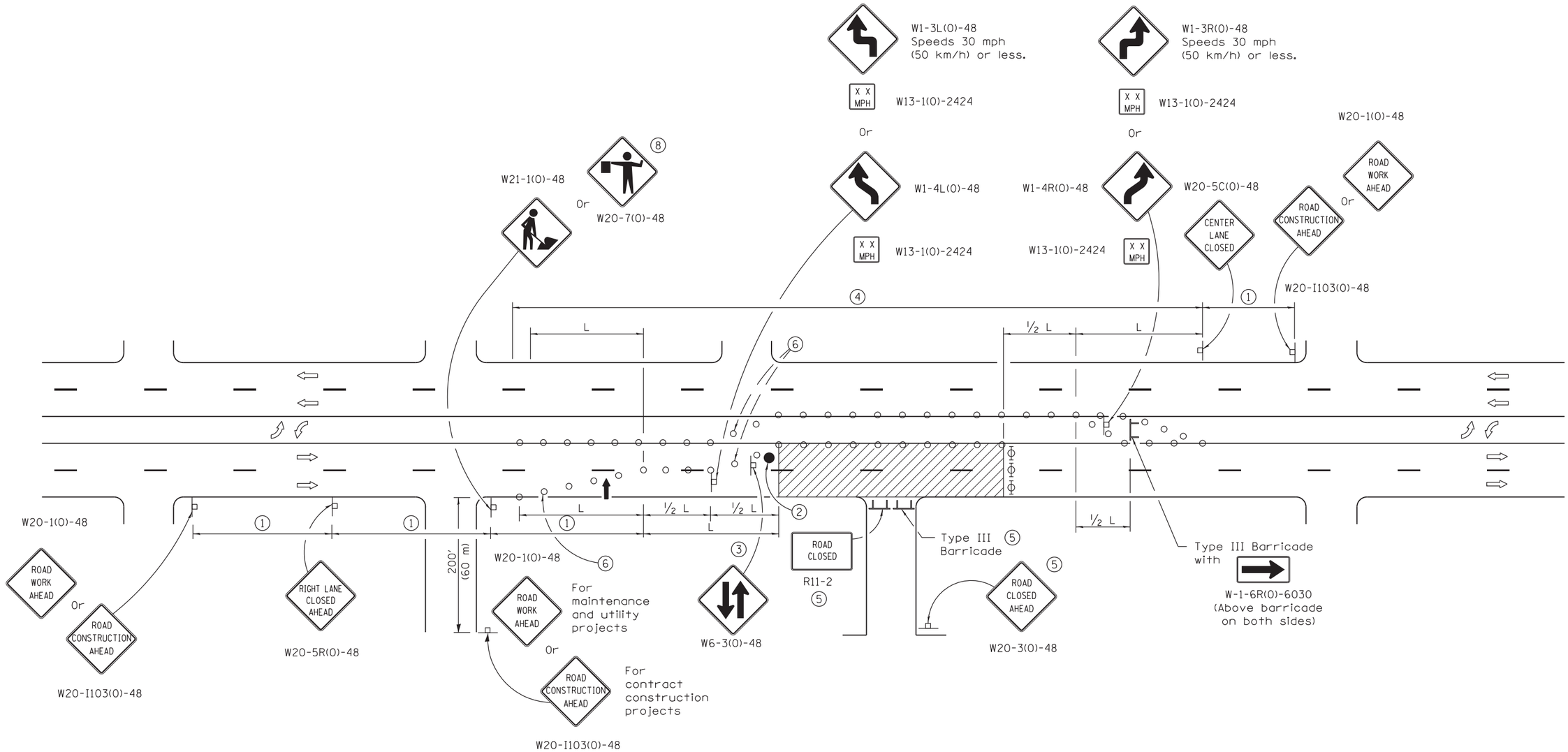

CASE II

Illinois Department of Transportation

APPROVED January 1, 2014
ENGINEER OF SAFETY ENGINEERING

APPROVED January 1, 2014
ENGINEER OF DESIGN AND ENVIRONMENT

ISSUED 1-1-01

URBAN LANE CLOSURE, MULTILANE, 2W WITH BIDIRECTIONAL LEFT TURN LANE

(Sheet 2 of 4)

STANDARD 701602–07

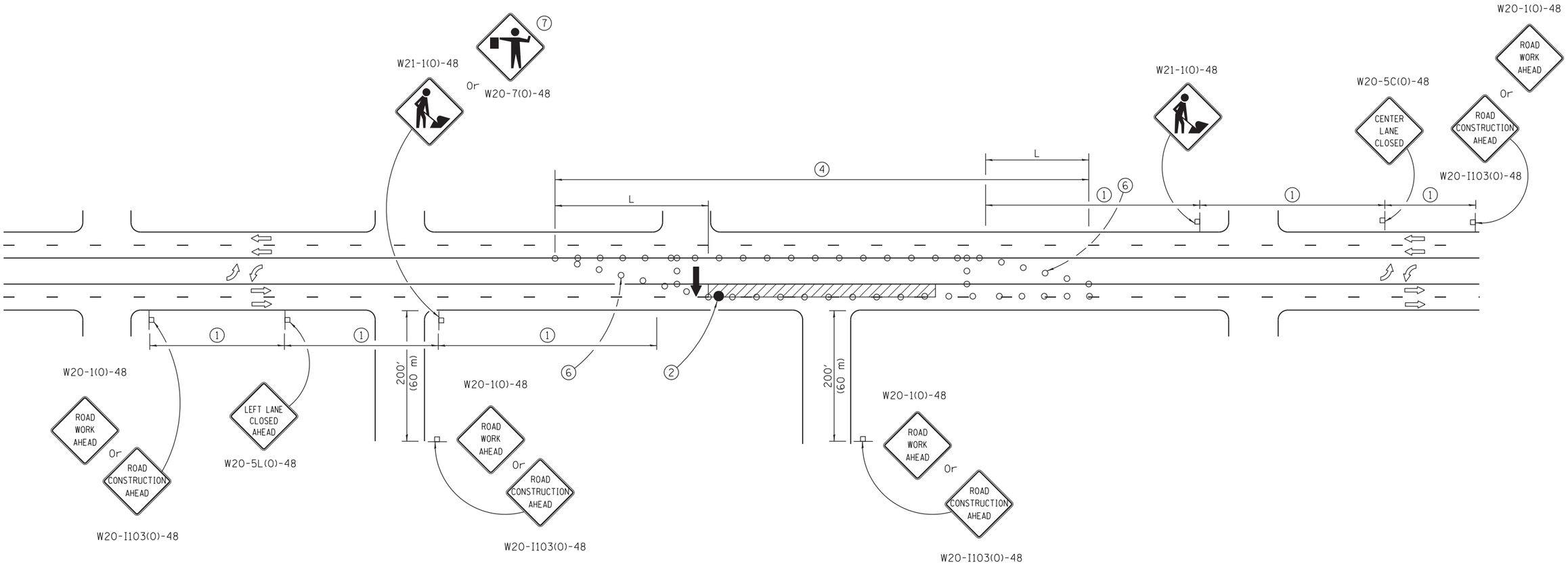

CASE III

Illinois Department of Transportation

APPROVED January 1, 2014
ENGINEER OF SAFETY ENGINEERING

APPROVED January 1, 2014
ENGINEER OF DESIGN AND ENVIRONMENT

ISSUED 1-1-01

URBAN LANE CLOSURE, MULTILANE, 2W WITH BIDIRECTIONAL LEFT TURN LANE

(Sheet 3 of 4)

STANDARD 701602–07

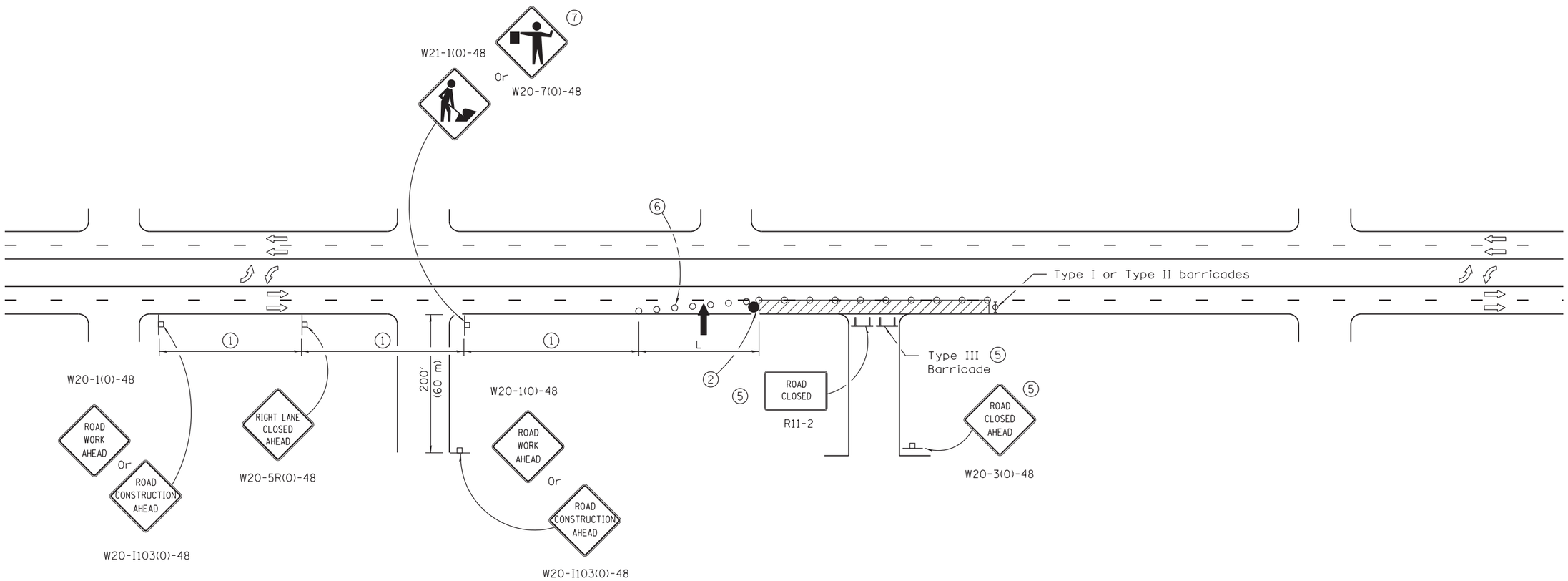

CASE IV

Illinois Department of Transportation

APPROVED January 1, 2014
ENGINEER OF SAFETY ENGINEERING

APPROVED January 1, 2014
ENGINEER OF DESIGN AND ENVIRONMENT

ISSUED 1-1-01

URBAN LANE CLOSURE, MULTILANE, 2W WITH BIDIRECTIONAL LEFT TURN LANE

(Sheet 4 of 4)

STANDARD 701602–07

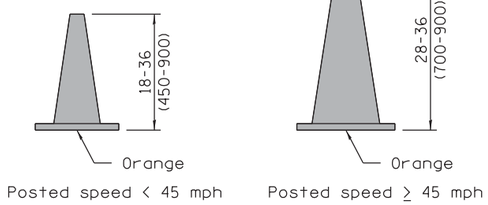

CONE FOR DAYTIME

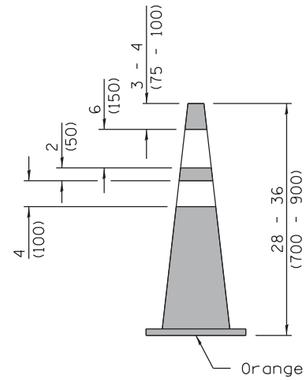

REFLECTORIZED CONE FOR NIGHTTIME

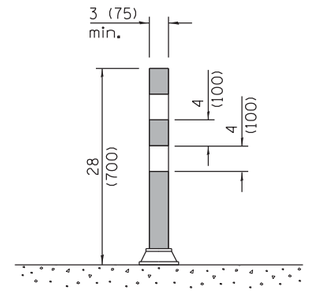

FLEXIBLE DELINEATOR

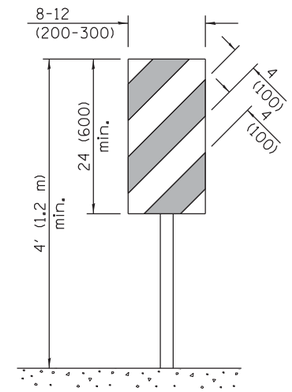

VERTICAL PANEL
POST MOUNTED

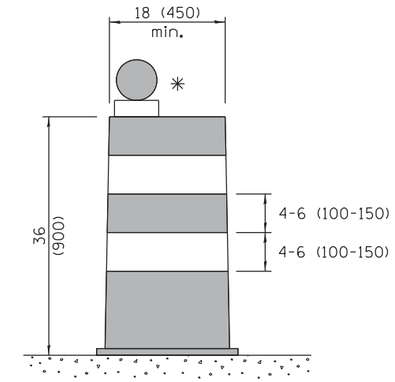

DRUM

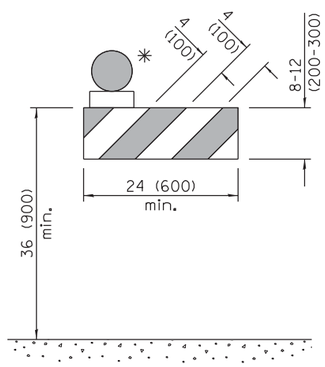

TYPE I BARRICADE

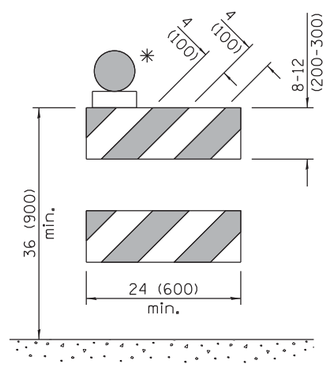

TYPE II BARRICADE

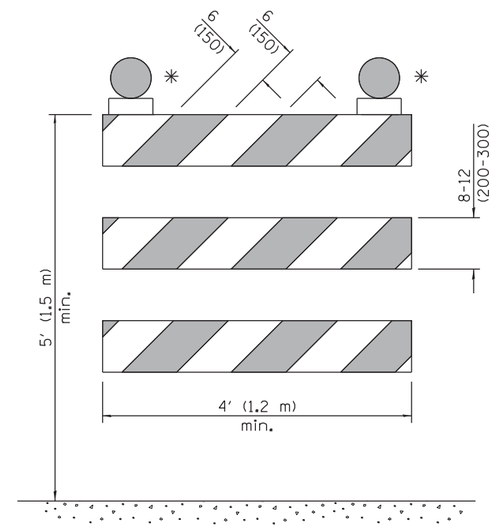

TYPE III BARRICADE

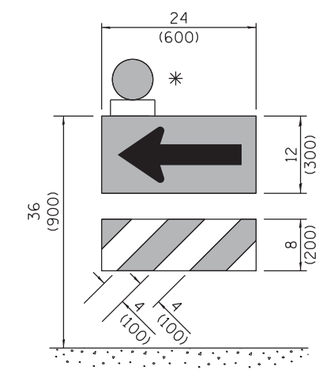

DIRECTION INDICATOR BARRICADE

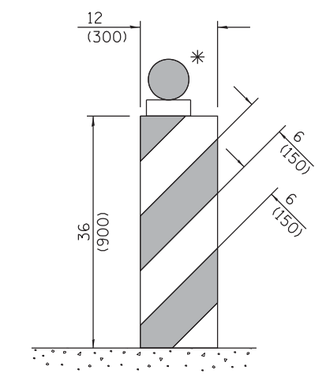

VERTICAL BARRICADE

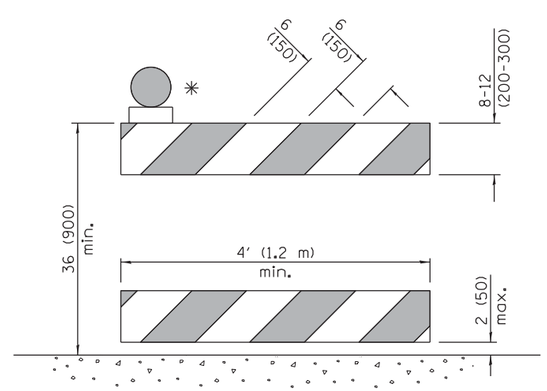

DETECTABLE PEDESTRIAN CHANNELIZING BARRICADE

✳ Warning lights (if required)

GENERAL NOTES

All heights shown shall be measured above the pavement surface.

All dimensions are in inches (millimeters) unless otherwise shown.

DATE	REVISIONS
4-1-16	Add dim's to barricades. Rev.
	note for post mnt. signs.
	Rev. cone dtls. Add W12-I103.
1-1-15	Revised two sign numbers on
	sheet 2. Added note reg.
	PHOTO ENFORCED plaque.

TRAFFIC CONTROL DEVICES

(Sheet 1 of 3)

STANDARD 701901–05

SHEET 64 OF 66

Illinois Department of Transportation

APPROVED April 1, 2016
ENGINEER OF OPERATIONS

APPROVED April 1, 2016
ENGINEER OF DESIGN AND ENVIRONMENT

ISSUED 1-1-97

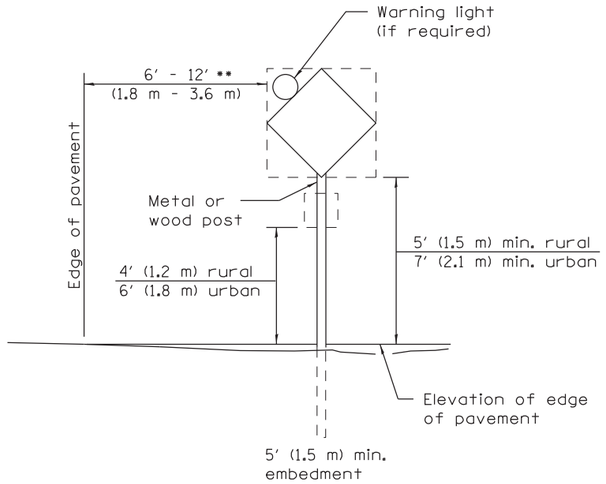

POST MOUNTED SIGNS

** When curb or paved shoulder are present this dimension shall be 24 (600) to the face of curb or 6′ (1.8 m) to the outside edge of the paved shoulder.

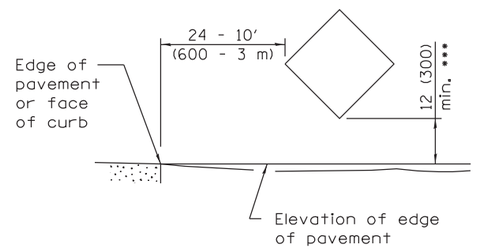

SIGNS ON TEMPORARY SUPPORTS

*** When work operations exceed four days, this dimension shall be 5′ (1.5 m) min. If located behind other devices, the height shall be sufficient to be seen completely above the devices.

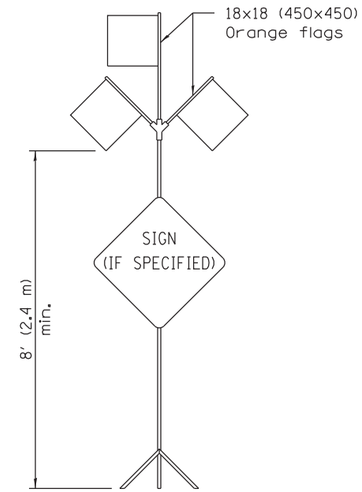

HIGH LEVEL WARNING DEVICE

W12-I103-4848

WIDTH RESTRICTION SIGN

XX′-XX″ width and X miles are variable.

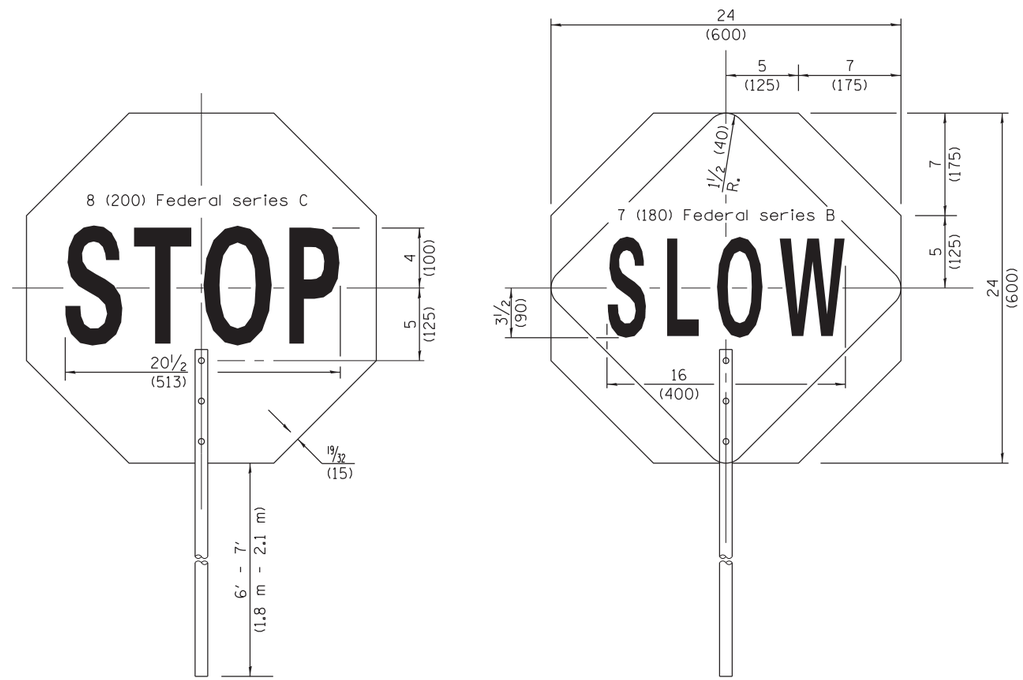

FLAGGER TRAFFIC CONTROL SIGN

G20-I104(0)-6036 G20-I105(0)-6024

This signing is required for all projects 2 miles (3200 m) or more in length.

ROAD CONSTRUCTION NEXT X MILES sign shall be placed 500′ (150 m) in advance of project limits.

END CONSTRUCTION sign shall be erected at the end of the job unless another job is within 2 miles (3200 m).

Dual sign displays shall be utilized on multi-lane highways.

WORK LIMIT SIGNING

W21-I115(0)-3618

R2-1-3648

R10-I108p-3618 ****

R2-I106p-3618

Sign assembly as shown on Standards or as allowed by District Operations.

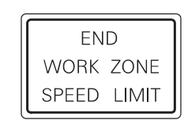

G20-I103(0)-6036

This sign shall be used when the above sign assembly is used.

HIGHWAY CONSTRUCTION SPEED ZONE SIGNS

**** R10-I108p shall only be used along roadways under the juristiction of the State.

Illinois Department of Transportation

APPROVED April 1, 2016
ENGINEER OF OPERATIONS

APPROVED April 1, 2016
ENGINEER OF DESIGN AND ENVIRONMENT

ISSUED 1-1-97

TRAFFIC CONTROL DEVICES

(Sheet 2 of 3)

STANDARD 701901–05

SHEET 65 OF 66

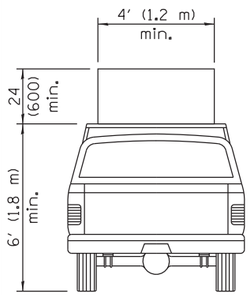

TYPE A ROOF MOUNTED

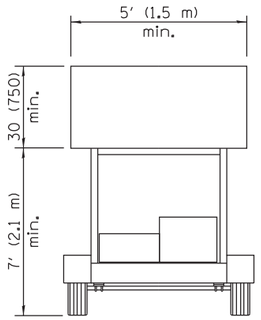

TYPE B ROOF OR TRAILER MOUNTED

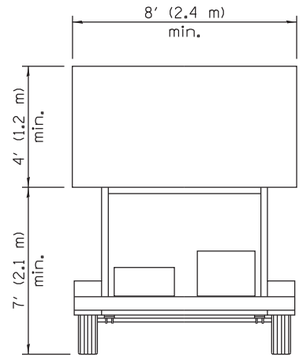

TYPE C TRAILER MOUNTED

ARROW BOARDS

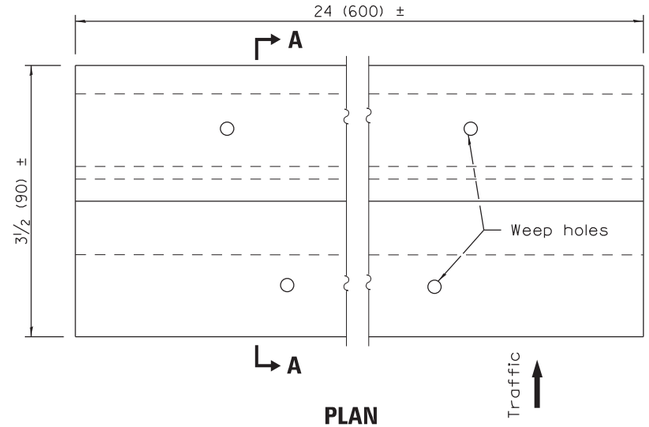

PLAN

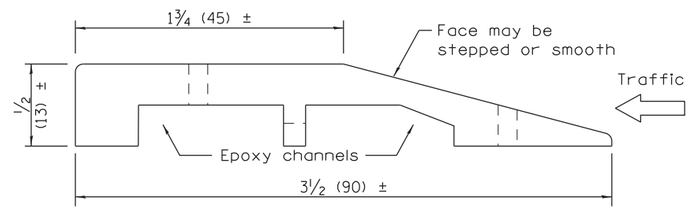

SECTION A–A

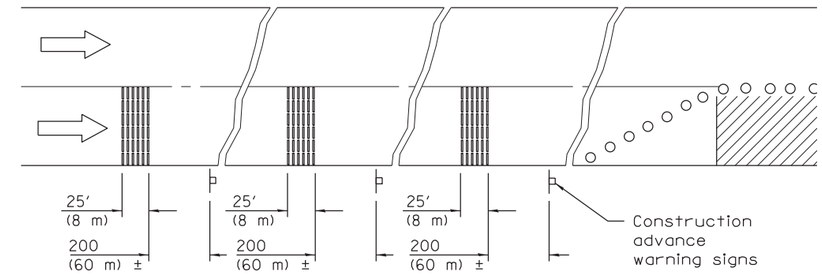

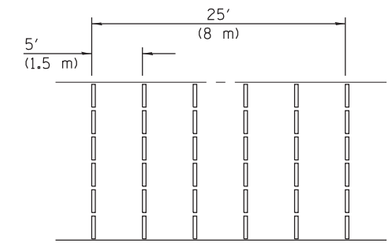

TYPICAL INSTALLATION

TEMPORARY RUMBLE STRIPS

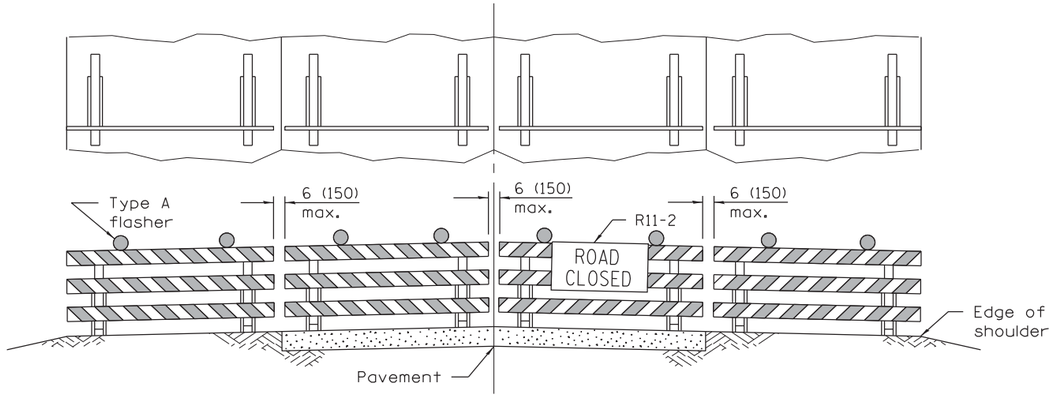

ROAD CLOSED TO ALL TRAFFIC

Reflectorized striping may be omitted on the back side of the barricades. If a Type III barricade with an attached sign panel which meets NCHRP 350 is not available, the sign may be mounted on an NCHRP 350 temporary sign support directly in front of the barricade.

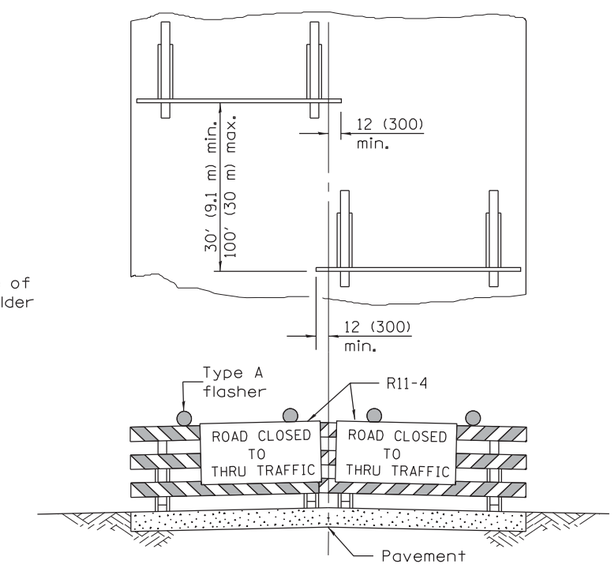

ROAD CLOSED TO THRU TRAFFIC

Reflectorized striping shall appear on both sides of the barricades. If a Type III barricade with an attached sign panel which meets NCHRP 350 is not available, the signs may be mounted on NCHRP 350 temporary sign supports directly in front of the barricade.

TYPICAL APPLICATIONS OF TYPE III BARRICADES CLOSING A ROAD

Illinois Department of Transportation

APPROVED April 1, 2016
ENGINEER OF OPERATIONS

APPROVED April 1, 2016
ENGINEER OF DESIGN AND ENVIRONMENT

ISSUED 1-1-97

TRAFFIC CONTROL DEVICES

(Sheet 3 of 3)

STANDARD 701901–05

SHEET 66 OF 66