STATE OF ILLINOIS
COUNTY OF LAKE
PLANS FOR PROPOSED MILLER ROAD RESURFACING
SECTION 14-00118-11-RS

INDEX OF SHEETS

SHEET No.	DESCRIPTION
1	COVER SHEET
2	GENERAL NOTES
3	SUMMARY OF QUANTITIES
4	TYPICAL SECTIONS
5 - 8	SCHEDULE OF QUANTITIES
9 - 20	REMOVAL SHEETS
21 - 32	PLAN SHEETS
33 - 38	TRAFFIC CONTROL PLAN
39	TRAFFIC SIGNAL PLAN
40	DETAIL SHEET
41 - 42	CROSS SECTIONS
43 - 50	LCDOT STANDARD DETAILS
51 - 79	IDOT HIGHWAY STANDARDS

IDOT HIGHWAY STANDARDS

000001-06 (8 SHT)	701011-04
280001-07 (2 SHT)	701311-03
630001-10 (4 SHT)	701501-06
630201-06	701901-05 (3 SHT)
630301-06 (2 SHT)	780001-05 (3 SHT)
701001-02	886001-01
701006-05	

LCDOT STANDARD DETAILS

LC2051	LC6304	LC7004	LC7802
LC4100	LC6310	LC7200	LC7805
LC4120	LC7000	LC7800	LC8600

PAVEMENT DESIGN FOR RESURFACING

IBR Value (for resurfacing only assume 3.00)	=> 3.00
REQUIRED STRUCTURAL NUMBER	=> 3.64
MILLING DEPTH	=> 3.75 INCHES
HOT-MIX ASPHALT SURFACE COURSE THICKNESS	=> 1.50 INCHES
HOT-MIX ASPHALT BINDER COURSE THICKNESS	=> 2.25 INCHES
HOT-MIX ASPHALT LEVELING BINDER (NOMINAL) THICKNESS	=>
HOT-MIX ASPHALT BASE COURSE THICKNESS	=>
DYNAFLECT EQUIVALENT STRUCTURAL VALUE OF EXISTING PAVEMENT	= 2.89
STRUCTURAL VALUE LOSS DUE TO MILLING (0.2 PER MILLING DEPTH INCH)	= -0.75
STRUCTURAL VALUE GAIN DUE TO PROPOSED HOT-MIX ASPHALT OVERLAY (0.4 PER HOT-MIX ASPHALT INCH THICKNESS)	= 1.50

HOT-MIX ASPHALT MIXTURE REQUIREMENTS

MIXTURE TYPE	AC TYPE	AIR VOIDS
HOT-MIX ASPHALT SURFACE COURSE, MIX "D", N70	PG 64-22	4% = 70 GYRATION
HOT-MIX ASPHALT BINDER COURSE, IL-19.0, N70	PG 64-22	4% = 70 GYRATION
LEVELING BINDER (MACHINE METHOD), N70	PG 64-22	4% = 70 GYRATION

THE UNIT WEIGHT USED TO CALCULATE ALL HMA SURFACE MIXTURE QUANTITIES IS 112 LBS/SQ YD/IN.

THE "AC TYPE" FOR POLYMERIZED HMA MIXES SHALL BE "SBS/SBR PG 76-22" AND FOR NON-POLYMERIZED HMA THE "AC TYPE" SHALL BE "PG 64-22" UNLESS MODIFIED BY DISTRICT ONE SPECIAL PROVISIONS.

FOR USE OF RECYCLED MATERIALS SEE SPECIAL PROVISIONS.

QUALITY MANAGEMENT PROGRAM (QMP) IDENTIFIES THE PARTICULAR QUALITY CONTROL SPECIFICATION THAT APPLIES TO THE HMA MIXTURE.

FOR UNDERGROUND UTILITY

LOCATIONS, CALL

J. U. L. I. E.

TOLL FREE

800-892-0123

PROJECT LOCATION

END PROJECT: STA. 153+86

BEGIN PROJECT: STA. 0+16

IL 59 OMISSION: STA. 78+39 TO STA. 79+12

STATION EQUATION: STA. 82+27.70BK = STA. 82+41.40AH

BRIDGE OMISSION: STA. 84+86 TO STA. 103+22

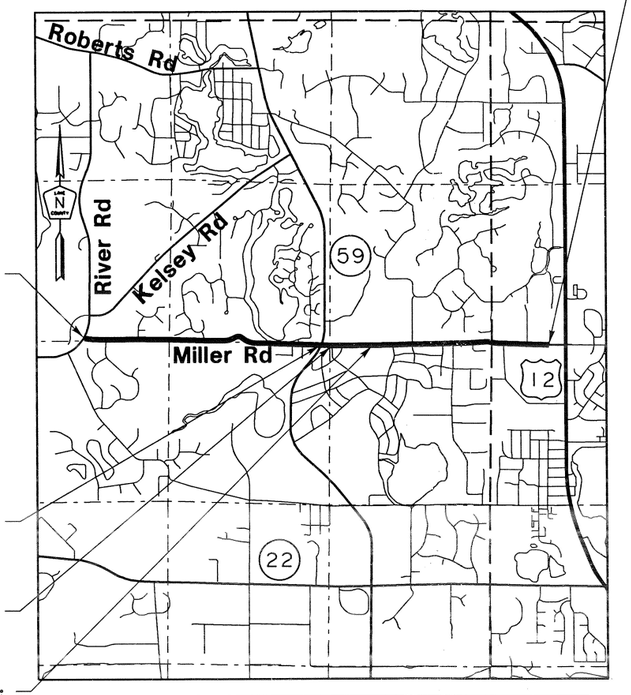

ROAD	STATION	STATION	LENGTH (FT.)	LENGTH (MI.)
MILLER ROAD	0+16	153+86	15356.3*	2.91
NET LENGTH OF IMPROVEMENT			13447.3	2.55

*STATION EQUATION: STA. 82+27.70BK = STA. 82+41.40AH (-13.7')

LICENSED PROFESSIONAL ENGINEER
PHILIP D. RUIZ
062-063586
STATE OF ILLINOIS

Plans Prepared By: LakeCounty Division of Transportation

Signature: Philip Ruiz
Date: 3/17/16
Illinois License No: 62-063586
Expiration Date: 11/30/17
Field: CIVIL
Approved By: P. J. Trigg, County Engineer
Date: 3/17/16

MILLER ROAD RESURFACING 14-00118-11-RS

REVISIONS / REMARKS					
NO.	DESCRIPTION	DATE	BY	SURVEYOR:	/
		/ /		DSGNR/LIAISON:	
		/ /		PLOTTED BY:	HDi8572 3/15/2016

MILLER ROAD RESURFACING
COVER SHEET

ROUTE	SECTION	SECTION NUMBER	SHEET	SHEETS
CH2	118	14-00118-11-RS	1	79

FILE NAME: U:\Design\Ruiz\14-00118-11-RS Miller Road Resurfacing\Plans\14-00118-11-RS cover sheet.dgn

LCDOT GENERAL NOTES
(Revised 1/5/15)

1. GENERAL

   a. All construction shall be done according to the State of Illinois "Standard Specifications for Road and Bridge Construction" adopted April 1, 2016; the "Supplemental Specifications and Recurring Special Provisions" adopted April 1, 2016; the latest edition of the "Illinois Manual on Uniform Traffic Control Devices for Streets and Highways"; the details in these plans, and the Special Provisions included in the contract documents.

   b. The Contractor shall notify the Engineer at least 72 hours prior to beginning work and shall coordinate all construction operations with the Engineer.

   c. The Contractor shall coordinate his/her work with any adjacent projects that are or may be under construction.

   d. The Contractor shall verify all dimensions and existing conditions in the field prior to ordering materials and beginning construction. Where new work is proposed to meet existing features, it shall be the Contractor's responsibility to field check all dimensions and elevations and notify the Engineer of discrepancies before proceeding with construction.

   e. The Contractor shall provide access to abutting properties at all times during construction, except for brief periods of interruption. The Contractor shall notify the property owner no less than 24 hours in advance of the interruption of access and/or services. The notification will include the time and duration of the interruption. The cost to provide access shall be paid for and included in the cost of TRAFFIC CONTROL AND PROTECTION (SPECIAL).

2. SURVEY

   a. All elevations shown on these plans are based upon the North American Vertical Datum of 1988 (NAVD 88). The elevations shown on the plans are for finished grades unless otherwise noted.

   b. Where section or subsection monuments are encountered, the Engineer shall be notified before the monuments are removed. The Contractor shall carefully preserve all property marks and monuments until the owner, authorized surveyor or agent has witnessed or otherwise referenced their location.

3. REMOVAL

   a. The Contractor shall saw cut the existing pavement, concrete curb & gutter, median, hot-mix asphalt shoulder, sidewalk, and/or other appurtenances as shown on the plans, to separate the existing material to be removed, by means of an approved concrete saw to a depth shown on the plans or as directed by the Engineer. This work shall be included in the cost of the item being removed.

   The Contractor shall be required to saw vertical cuts so as to form clean vertical joints. Should the Contractor deface any edge, a new sawed joint shall be provided and any additional work, including removal and replacement, shall be done at the Contractor's expense.

   b. All excess material shall be disposed of offsite on the day it is excavated or removed.

   c. The Contractor is prohibited from burning any material within or adjacent to the project limits. All excess or waste material shall be hauled away from the project site by the Contractor and legally disposed of outside the right-of-way. No extra compensation will be allowed the Contractor for any expense incurred by complying with the requirements of this note.

4. DRAINAGE

   a. Unless otherwise noted on the plans, the existing drainage facilities shall remain in use during the period of construction. During construction operations the Contractor shall ensure positive site drainage at the conclusion of each day. Site drainage may be achieved by ditching, pumping, or any other method acceptable to the Engineer.

   b. When existing drainage facilities are disturbed, the Contractor shall provide and maintain temporary outlets and connections for all private or public drains, culverts, sewers or catch basins. The Contractor shall provide facilities to take in all storm water which will be received by these drains and sewers and discharge the same. The Contractor shall provide and maintain an efficient pumping plant, if necessary, and a temporary outlet. The Contractor shall be prepared at all times to dispose of the water received from temporary connections until such time as the permanent connections with sewer are built and in service. This work will not be paid for separately, but shall be included in the cost of the storm sewers and drainage structures installed as part of this project.

   c. During the construction operation when any loose material is deposited in the flow line of ditches, gutters or drainage structures so the natural flow of water is obstructed, the material shall be removed at the close of each working day.

   At the conclusion of the construction operations all drainage structures shall be free from all dirt and debris. This work will not be paid for separately but shall be considered included in the unit costs of the various Temporary Erosion Control Systems e.g. INLET FILTERS, INLET PROTECTION SPECIAL, TEMPORARY DITCH CHECKS, etc.

5. DRIVEWAYS AND ENTRANCES

   a. Existing hot-mix asphalt and gravel driveways and entrances shall be resurfaced to one foot inside the right-of-way with Hot-Mix Asphalt Surface Course as scheduled on the plans.

   b. Existing hot mix asphalt driveways and entrances shall be sawcut at the limits of the construction line. The surface shall be removed to the sawcut. The aggregate base shall be appropriately prepared, and the driveway shall be resurfaced with Hot-Mix Asphalt Surface Course.

   c. Existing aggregate field entrances shall be built up in place to one foot inside the right-of-way with aggregate base course.

6. LANDSCAPING: Phosphorus Fertilizer Nutrient **shall not** be used on Lake County Highways.

7. MILLED PAVEMENT: When milled pavement is open to traffic, the maximum elevation difference betwen lanes, at concrete curb and gutter, or existing ground (shoulders, entrances, etc...) shall not exceed 1.5 inches. With written approval from the Engineer the maximum elevation difference may be up to 3 inches if the edge of the milling is sloped a minimum of 3:1 (H:V).

8. SIGNS

   a. The Contractor will be required to relocate or remove and replace signs which interfere with his/her construction operations, and to temporarily reset all such signs during construction operations according to **Article 107.25 of the "Standard Specifications".**

      - All unused signs shall be returned to the County.
      - Longer posts may be required at some temporary or permanent sign locations to maintain proper sign elevations.

9. UTILITIES

   a. Before starting any excavation, the Contractor shall contact "JULIE" at 1-800-892-0123 for field locations of buried electric, telephone, gas, water, sewer, cable, etc.., utility lines (minimum 48 hours notification is required).

   b. The Contractor shall be responsible for any damage or destruction of public or private property according to the special provisions and Article 107.20 of the "Standard Specifications". The Contractor shall restore such property at his/her own expense. The Contractor shall use all necessary precautions and protective measures required to maintain existing utilities, sewers, and appurtenances that must be kept in operation. In particular, the Contractor will take adequate measures to prevent the undermining of utilities and sewers which are still in service.

10. MAILBOXES

    a. According to Article 107.20 of the "Standard Specifications" the Contractor shall remove all mailboxes within the limits of construction which interfere with construction operations. The removed mailboxes shall be erected at temporary locations. As soon as construction operations permit, the Contractor shall set the mailboxes at their permanent locations as directed by the Engineer and approved by the Postmaster. This work is included in the unit bid price of the contract, and no additional compensation will be allowed.

11. MISCELLANEOUS

    a. The Contractor shall provide temporary toilet facilities for the use of all the Contractors' personnel employed on the work site, and shall maintain same in proper sanitary condition. The temporary facilities shall include hand sanitizing stations. At the completion of the project, the facilities shall be removed and the premises left clean. The Engineer shall approve the location of the temporary toilets. The cost of this work shall be included in the unit bid prices and no additional compensation will be allowed.

    b. Generally 10 foot transitions shall be used to match proposed items of work to existing items in the field, unless otherwise shown on the plans. The transitions shall be paid for at the contract unit price for the proposed item of work specified.

    c. The Contractor shall not cross completed surface course, or existing pavement not scheduled to be removed, with construction equipment which may damage the pavement.

SUMMARY OF QUANTITIES

ITEM #	E	S	PAY CODE	DESCRIPTION	UNIT	QUANTITY	SCHEDULE	SHEET
1		S	20200100	EARTH EXCAVATION	CU YD	171	1	5
2		S	20200600	EXCAVATING AND GRADING EXISTING SHOULDER	UNIT	219	2	5
3		S	28000400	PERIMETER EROSION BARRIER	FOOT	616	3	5
4			28100107	STONE RIPRAP, CLASS A4	SQ YD	562	3	5
5			28200200	FILTER FABRIC	SQ YD	562	3	5
6		S	35101400	AGGREGATE BASE COURSE, TYPE B	TON	619	4	5
7			40600290	BITUMINOUS MATERIALS (TACK COAT)	POUND	49,779	5	5
8	E	S	40600535	LEVELING BINDER (HAND METHOD), N70	TON	20	N/A	N/A
9			40603085	HOT-MIX ASPHALT BINDER COURSE, IL-19.0, N70	TON	6,551	6	6
10			40603340	HOT-MIX ASPHALT SURFACE COURSE, MIX "D", N70	TON	4,188	6	6
11		S	44000164	HOT-MIX ASPHALT SURFACE REMOVAL, 3 3/4"	SQ YD	31,151	7	6
12			44000200	DRIVEWAY PAVEMENT REMOVAL	SQ YD	1,489	8	7
13	E	S	44201713	CLASS D PATCHES, TYPE I, 6 INCH	SQ YD	164	10	7
14	E	S	44201717	CLASS D PATCHES, TYPE II, 6 INCH	SQ YD	245	10	7
15	E	S	44201721	CLASS D PATCHES, TYPE III, 6 INCH	SQ YD	736	10	7
16	E	S	44201723	CLASS D PATCHES, TYPE IV, 6 INCH	SQ YD	491	10	7
17			63000009	STEEL PLATE BEAM GUARDRAIL, TYPE B, 9 FOOT POSTS	FOOT	487.5	11	7
18		S	63100167	TRAFFIC BARRIER TERMINAL, TYPE 1 (SPECIAL) TANGENT	EACH	4	11	7
19			63200310	GUARDRAIL REMOVAL	FOOT	574	11	7
20			67100100	MOBILIZATION	L SUM	1	N/A	N/A
21			70300100	SHORT TERM PAVEMENT MARKING	FOOT	7,880	12	7
22			70300150	SHORT TERM PAVEMENT MARKING REMOVAL	SQ FT	1,313	12	7
23			70300210	TEMPORARY PAVEMENT MARKING LETTERS AND SYMBOLS	SQ FT	291.2	13	8
24			70300220	TEMPORARY PAVEMENT MARKING - LINE 4"	FOOT	26,732	13	8
25			70300230	TEMPORARY PAVEMENT MARKING - LINE 5"	FOOT	27,108	13	8
26			70300240	TEMPORARY PAVEMENT MARKING - LINE 6"	FOOT	672	13	8
27			70300280	TEMPORARY PAVEMENT MARKING - LINE 24"	FOOT	83	13	8
28			70300520	PAVEMENT MARKING TAPE, TYPE III 4"	FOOT	3,940	12	7
29		S	78000300	THERMOPLASTIC PAVEMENT MARKING - LINE 5"	FOOT	1,703	13	8
30			78001120	PAINT PAVEMENT MARKING - LINE 5"	FOOT	25,405	13	8
31		S	78300200	RAISED REFLECTIVE PAVEMENT MARKER REMOVAL	EACH	431	14	8
32		S	88600600	DETECTOR LOOP REPLACEMENT	FOOT	474	15	8
33	E	S	LC200051	REJECTED LOAD TRANSPORTATION	LOAD	3	N/A	N/A
34		S	LC200501	MAINTENANCE OF TEMPORARY EROSION CONTROL SYSTEMS	UNIT	2,448	N/A	N/A
35		S	LC600200	INSTALL SURVEY MONUMENTS	EACH	5	N/A	N/A
36		S	LC780020	GROOVED THERMOPLASTIC PAVEMENT MARKING - LETTERS AND SYMBOLS	SQ FT	291.2	13	8
37		S	LC780021	GROOVED THERMOPLASTIC PAVEMENT MARKING - LINE 4"	FOOT	26,732	13	8
38		S	LC780023	GROOVED THERMOPLASTIC PAVEMENT MARKING - LINE 6"	FOOT	672	13	8
39		S	LC780026	GROOVED THERMOPLASTIC PAVEMENT MARKING - LINE 24"	FOOT	83	13	8
40		S	LC782000	GUARDRAIL REFLECTORS	EACH	29	11	7
41		S	X0321461	PILLAR REMOVAL	EACH	5	16	8
42		S	X4401198	HOT-MIX ASPHALT SURFACE REMOVAL, VARIABLE DEPTH	SQ YD	3,925	7	6
43		S	X6700405	ENGINEER'S FIELD OFFICE, TYPE A (MODIFIED)	CAL MO	3	N/A	N/A
44		S	X7010216	TRAFFIC CONTROL AND PROTECTION, (SPECIAL)	L SUM	1	N/A	N/A
45		S	X7810300	RECESSED REFLECTIVE PAVEMENT MARKER	EACH	148	14	8
46	E	S	XX006343	SEEDING (COMPLETE)	SQ YD	200	3	5
			E	ESTIMATED OR CONTINGENCY ITEM				
			S	SPECIAL PROVISION				

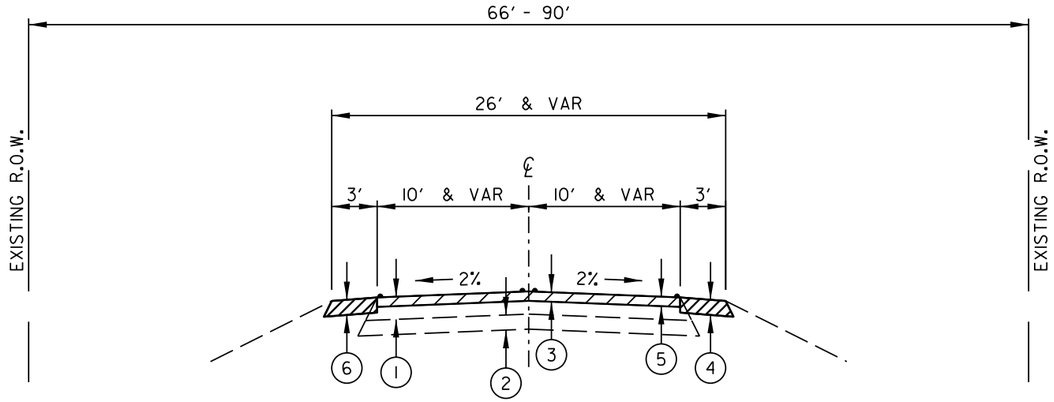

PROPOSED TYPICAL SECTION

STA. 0+16 TO STA. 23+36
STA. 25+13 TO STA. 27+81
STA. 30+23 TO STA. 30+66
STA. 34+05 TO STA. 39+42
STA. 40+58 TO STA. 46+31
STA. 57+19 TO STA. 70+36
STA. 81+21 TO STA. 84+14
STA. 105+48 TO STA. 118+22
STA. 120+44 TO STA. 128+70
STA. 133+16 TO STA. 147+32
STA. 148+66 TO STA. 153+86

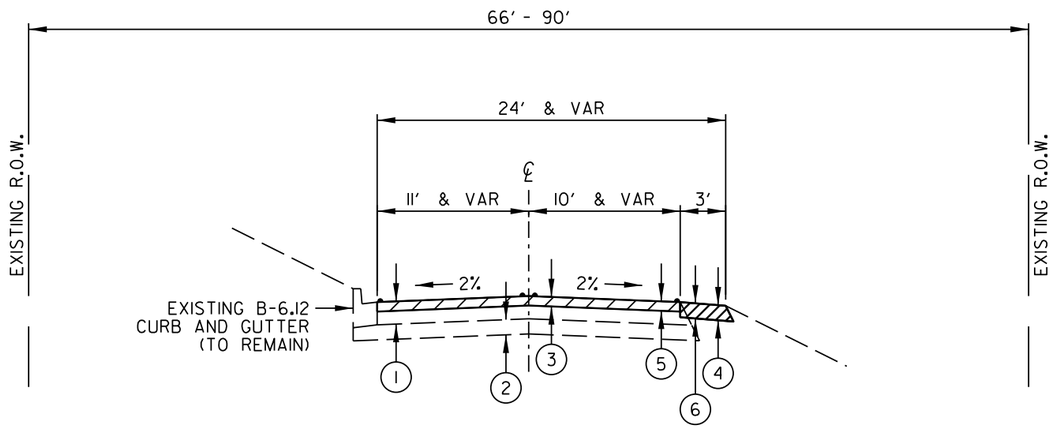

PROPOSED TYPICAL SECTION

STA. 23+36 TO STA. 25+13
STA. 27+81 TO STA. 30+23
STA. 39+42 TO STA. 40+58
STA. 70+36 TO STA. 78+39
STA. 79+12 TO STA. 81+21
STA. 84+14 TO STA. 84+86
STA. 103+22 TO STA. 105+48
STA. 118+22 TO STA. 120+44
STA. 128+70 TO STA. 133+16
STA. 147+32 TO STA. 148+66

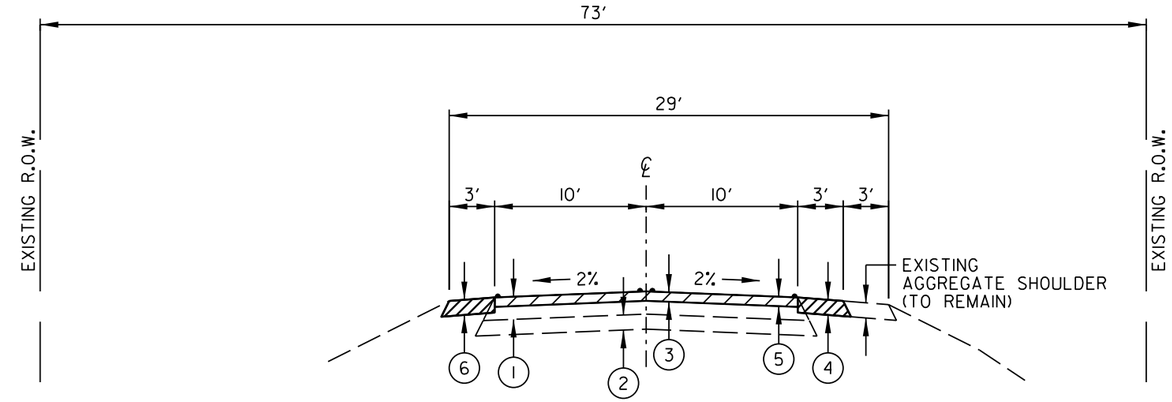

PROPOSED TYPICAL SECTION

STA. 30+66 TO STA. 34+05

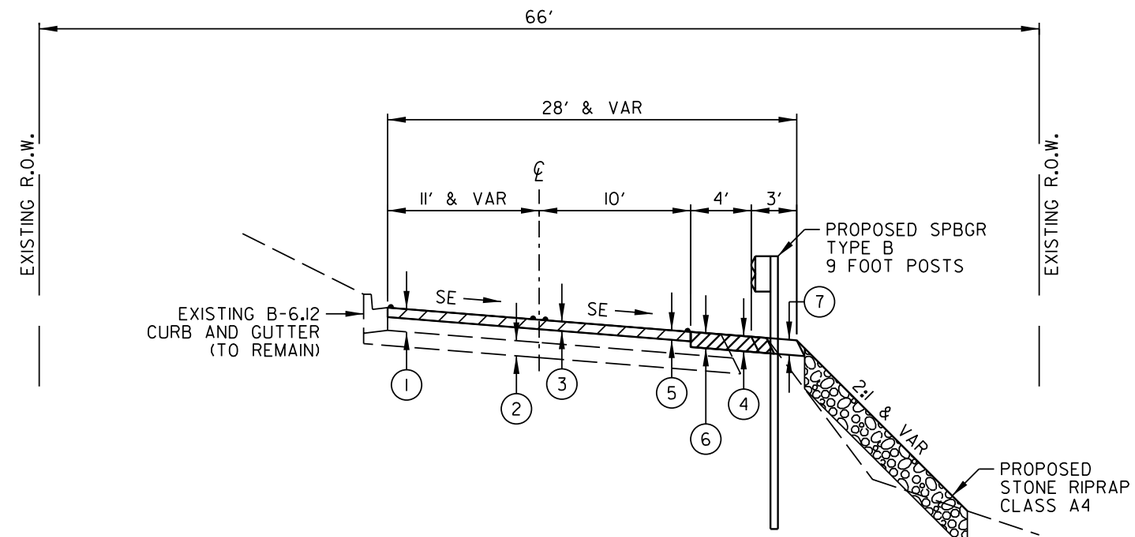

PROPOSED TYPICAL SECTION

STA. 46+31 TO STA. 57+19

EXISTING PAVEMENT (BY RECORDS)

1. 7''-13'' HMA PAVEMENT
2. 6''+ GRAVEL

REMOVAL ITEMS

3. HMA SURFACE REMOVAL, 3 ¾''
4. EXCAVATING AND GRADING EXISTING SHOULDER

PROPOSED PAVEMENT

5. 3 ¾'' HMA OVERLAY:
   1 ½'' HMA SURFACE COURSE, MIX ''D'', N70
   2 ¼'' HMA BINDER COURSE, IL-19.0, N70
6. 6'' HMA SHOULDER:
   1 ½'' HMA SURFACE COURSE, MIX ''D'', N70
   4 ½'' HMA BINDER COURSE, IL-19.0, N70
7. UNDER GUARDRAIL:
   2 ½'' HMA SURFACE COURSE, MIX ''D'', N70
   6'' AGGREGATE BASE COURSE, TYPE B

NOTE: SEE SCHEDULES AND/OR PLAN SHEETS FOR LOCATIONS OF TURN LANES, EXISTING CURB AND GUTTER, AND PROPOSED GUARDRAIL.

OMISSIONS:
STA. 78+39 TO STA. 79+12 (IL 59)
STA. 84+86 TO STA. 103+22 (S.N. 049-3090)

REVISIONS / REMARKS					
NO.	DESCRIPTION	DATE	BY	SURVEYOR:	/
		/ /		DSGNR/LIAISON:	
		/ /		PLOTTED BY:	HDI8572 3/15/2016

15' VERT 0 — SCALES HORIZ. 0 5 10

MILLER ROAD RESURFACING — LakeCounty Division of Transportation — **TYPICAL SECTIONS**

ROUTE	SECTION	SECTION NUMBER	SHEET	SHEETS
CH2	118	14-00118-11-RS	4	79

FILE NAME: U:\Design\Ruiz\14-00118-11-RS Miller Road Resurfacing\Plans\14-00118-11-RS typicals.dgn

1 EARTHWORK

STATION	CUT CROSS SECTION AREA (SQ FT)	FILL CROSS SECTION AREA (SQ FT)	EARTH EXCAVATION (CU YD)	EMBANKMENT (CU YD)	(ASSUMED 20% SHRINKAGE) BORROW EXCAVATION (+) (CU YD)	EXCESS MATERIAL (-) (CU YD)
48+42	0.0	0.0				
49+00	0.0	3.4	0.0	3.7	3.7	
49+50	0.0	3.4	0.0	6.3	6.3	
50+00	9.9	0.9	9.2	4.0		3.4
50+50	13.5	0.1	21.7	0.9		16.5
51+00	12.1	0.3	23.7	0.4		18.6
51+50	8.2	0.6	18.8	0.8		14.2
52+00	4.3	8.3	11.6	8.2		1.1
52+50	13.9	0.4	16.9	8.1		5.4
53+00	9.6	0.3	21.8	0.6		16.8
53+50	6.4	1.7	14.8	1.9		9.9
54+00	5.0	6.8	10.6	7.9		0.6
54+58	0.0	0.0	5.4	7.3	3.0	
SUBTOTAL			155	50		74
10% CONTINGENCY			16			
TOTAL			**171**			

2 SHOULDER REMOVAL

FROM STATION	TO STATION	LEFT OR RIGHT	LENGTH (FOOT)	EXCAVATING AND GRADING EXISTING SHOULDER (UNIT)
0+12	6+54	RT	642	6.42
0+22	16+89	LT	1,667	16.67
7+43	24+03	RT	1,660	16.60
18+52	23+36	LT	484	4.84
25+06	27+81	LT	275	2.75
25+13	39+42	RT	1,429	14.29
30+23	38+88	LT	865	8.65
40+58	69+08	RT	2,850	28.50
41+12	47+75	LT	663	6.63
50+06	51+79	LT	173	1.73
56+15	70+36	LT	1,421	14.21
69+44	72+29	RT	285	2.85
72+68	77+78	RT	510	5.10
79+28	82+06	RT	278	2.78
81+21	84+86	LT	351	3.51
82+59	84+16	RT	157	1.57
105+20	108+44	RT	324	3.24
105+48	108+50	LT	302	3.02
109+12	118+39	RT	927	9.27
109+25	118+22	LT	897	8.97
118+78	121+42	RT	264	2.64
120+43	128+70	LT	827	8.27
122+65	124+00	RT	135	1.35
124+79	128+25	RT	346	3.46
129+05	130+76	RT	171	1.71
132+00	146+34	LT	1,434	14.34
133+16	138+57	RT	541	5.41
139+32	153+86	RT	1,454	14.54
148+66	153+86	LT	520	5.20
TOTAL				**219**

3 EROSION CONTROL

FROM STATION	TO STATION	LEFT OR RIGHT	CROSS SECTION WIDTH (FOOT)	PERIMETER EROSION BARRIER (FOOT)	STONE RIPRAP CLASS A4 (SQ YD)	FILTER FABRIC (SQ YD)	SEEDING COMPLETE (SQ YD)
48+42	54+58	RT		616			200
49+50		RT	0				
50+00		RT	12		33	33	
50+50		RT	12		67	67	
51+00		RT	12		67	67	
51+50		RT	13		69	69	
52+00		RT	11		67	67	
52+50		RT	13		67	67	
53+00		RT	7		56	56	
53+50		RT	10		47	47	
54+00		RT	11		58	58	
54+50		RT	0		31	31	
TOTAL				**616**	**562**	**562**	**200**

4 AGGREGATE BASE

FROM STATION	TO STATION	LEFT OR RIGHT	AREA (SQ FT)	(2 TON/CU YD) AGGREGATE BASE COURSE TYPE B (TON)
48+86	54+16	RT	1,528	57
50+11	51+76	LT	601	22
ENTRANCES (SEE SCHEDULE 8)				484
SUBTOTAL				563
10% CONTINGENCY				56
TOTAL				**619**

5 TACK COAT

LOCATION	AREA (SQ FT)	APPLICATION RATE (LB/SQ FT)	BITUMINOUS MATERIALS TACK COAT (POUND)
UNDER BINDER COURSE:			
PAVEMENT (MILLED)	283,006	0.050	14,150
SHOULDERS	66,627	0.250	16,657
SIDEROADS (MILLED)	7,540	0.050	377
BETWEEN BINDER AND SURFACE COURSE:			
PAVEMENT	283,006	0.025	7,075
SHOULDERS	66,627	0.025	1,666
SIDEROADS	7,540	0.025	189
UNDER SURFACE COURSE ONLY:			
PAVEMENT (MILLED)	11,550	0.050	578
UNDER GUARDRAIL	2,129	0.250	532
ENTRANCES	13,398	0.250	3,350
SIDEROADS (MILLED)	13,592	0.050	680
SUBTOTAL			45,254
10% CONTINGENCY			4,525
TOTAL			**49,779**

6 HOT-MIX ASPHALT

FROM STATION	TO STATION	LEFT OR RIGHT	LOCATION	WIDTH (FOOT)	AREA (SQ FT)	(112 LB/SQ YD/IN) HOT-MIX ASPHALT BINDER COURSE IL-19.0, N70 (TON)	(112 LB/SQ YD/IN) HOT-MIX ASPHALT SURFACE COURSE MIX "D", N70 (TON)
0+12	6+54	RT	SHOULDER	3	1,926	54	18
0+16	4+68		PAVEMENT		14,602		136
0+21	16+89	LT	SHOULDER	3	5,004	140	47
0+76	4+68		PAVEMENT		12,375	173	
4+68	23+36		PAVEMENT	20	37,360	523	349
7+45	24+03	RT	SHOULDER	3	4,974	139	46
18+52	23+36	LT	SHOULDER	3	1,452	41	14
23+36	25+13		PAVEMENT		3,912	55	37
25+06	27+81	LT	SHOULDER	3	825	23	8
25+13	27+81		PAVEMENT	20	5,360	75	50
25+13	39+42	RT	SHOULDER	3	4,287	120	40
27+81	30+23		PAVEMENT		5,219	73	49
30+23	38+84		PAVEMENT	20	17,220	241	161
30+23	38+87	LT	SHOULDER	3	2,592	73	24
38+84	41+12		PAVEMENT		7,113	100	66
40+58	48+42	RT	SHOULDER	3	2,352	66	22
41+12	47+75		PAVEMENT	20	13,260	186	124
41+12	47+75	LT	SHOULDER	3	1,989	56	19
47+75	50+05		PAVEMENT		5,031	70	47
48+42	54+58	RT	SHOULDER		2,650	74	25
48+86	54+15	RT	UNDER GUARDRAIL		1,528		24
50+05	51+82		PAVEMENT	20	3,540	50	33
50+05	51+82	LT	SHOULDER		805	23	8
50+11	51+76	LT	UNDER GUARDRAIL		601		9
51+82	56+15		PAVEMENT		9,376	131	88
54+58	69+08	RT	SHOULDER	3	4,350	122	41
56+15	69+49		PAVEMENT	20	26,680	374	249
56+15	70+36	LT	SHOULDER	3	4,263	119	40
69+45	72+29	RT	SHOULDER	3	852	24	8
69+49	77+79		PAVEMENT		25,944	363	
69+49	78+39		PAVEMENT		29,019		271
72+72	77+78	RT	SHOULDER	3	1,518	43	14
79+12	82+62		PAVEMENT		10,141		95
79+29	82+06	RT	SHOULDER	3	831	23	8
SUBTOTAL (PART 1)						3,554	2,170

FROM STATION	TO STATION	LEFT OR RIGHT	LOCATION	WIDTH (FOOT)	AREA (SQ FT)	(112 LB/SQ YD/IN) HOT-MIX ASPHALT BINDER COURSE IL-19.0, N70 (TON)	(112 LB/SQ YD/IN) HOT-MIX ASPHALT SURFACE COURSE MIX "D", N70 (TON)
79+72	82+62		PAVEMENT		7,571	106	
81+21	84+86	LT	SHOULDER	3	1,054	30	10
82+59	84+14	RT	SHOULDER	3	465	13	4
82+62	84+14		PAVEMENT	20	3,040	43	28
84+14	84+26		PAVEMENT		263	4	
84+14	84+86		PAVEMENT		1,520		14
103+22	105+48		PAVEMENT		4,613		43
103+82	105+48		PAVEMENT		3,382	47	
105+20	108+44	RT	SHOULDER	3	972	27	9
105+48	108+51	LT	SHOULDER	3	909	25	8
105+48	118+22		PAVEMENT	20	25,480	357	238
109+13	118+39	RT	SHOULDER	3	2,778	78	26
109+25	118+22	LT	SHOULDER	3	2,691	75	25
118+22	120+44		PAVEMENT		4,544	64	42
118+80	121+42	RT	SHOULDER	3	786	22	7
120+44	128+70		PAVEMENT	20	16,520	231	154
120+44	128+70	LT	SHOULDER	3	2,478	69	23
122+62	124+00	RT	SHOULDER	3	414	12	4
124+79	128+25	RT	SHOULDER	3	1,038	29	10
128+70	133+16		PAVEMENT		9,468	133	88
129+02	130+77	RT	SHOULDER	3	525	15	5
132+00	146+34	LT	SHOULDER	3	4,302	120	40
133+16	138+57	RT	SHOULDER	3	1,623	45	15
133+16	146+26		PAVEMENT	20	26,200	367	245
139+32	153+86	RT	SHOULDER	3	4,362	122	41
146+26	148+66		PAVEMENT		4,948	69	46
148+66	153+26		PAVEMENT	20	9,200	129	
148+66	153+86		PAVEMENT	20	10,400		97
148+66	153+86	LT	SHOULDER	3	1,560	44	15
SIDEROADS (SEE SCHEDULE 9)						125	198
ENTRANCES (SEE SCHEDULE 8)							202
SUBTOTAL (PART 2)						2,401	1,637
SUBTOTAL (PART 1) + SUBTOTAL (PART 2)						5,955	3,807
10% CONTINGENCY						596	381
TOTAL						**6,551**	**4,188**

7 HOT-MIX ASPHALT SURFACE REMOVAL

FROM STATION	TO STATION	WIDTH (FOOT)	AREA (SQ FT)	HOT-MIX ASPHALT SURFACE REMOVAL 3 3/4" (SQ YD)	HOT-MIX ASPHALT SURFACE REMOVAL VARIABLE DEPTH (SQ YD)
0+16	0+91		2,767		307
0+91	4+68		11,835	1,315	
4+68	23+36	20	37,360	4,151	
23+36	25+13		3,912	435	
25+13	27+81	20	5,360	596	
27+81	30+23		5,219	580	
30+23	38+84	20	17,220	1,913	
38+84	41+12		7,113	790	
41+12	47+75	20	13,260	1,473	
47+75	50+05		5,031	559	
50+05	51+82	20	3,540	393	
51+82	56+15		9,376	1,042	
56+15	69+49	20	26,680	2,964	
69+49	77+64		25,345	2,816	
77+64	78+39		3,674		408
79+12	79+87		3,145		349
79+87	82+62		6,996	777	
82+62	84+11	20	2,980	331	
84+11	84+86		1,570		174
103+22	103+97		1,539		171
103+97	105+48		3,074	342	
105+48	118+22	20	25,480	2,831	
118+22	120+44		4,544	505	
120+44	128+70	20	16,520	1,836	
128+70	133+16		9,468	1,052	
133+16	146+26	20	26,200	2,911	
146+26	148+66		4,948	550	
148+66	153+11	20	8,900	989	
153+11	153+86	20	1,500		167
SIDEROADS (SEE SCHEDULE 9)					2,349
TOTAL				**31,151**	**3,925**

8 ENTRANCES

STATION	LEFT OR RIGHT	ENTRANCE TYPE AND MATERIAL	AREA (SQ FT)	(2 TON/CU YD) AGGREGATE BASE COURSE TYPE B (TON)	(112 LB/SQ YD/IN) HOT-MIX ASPHALT SURFACE COURSE MIX "D", N70 (TON)	DRIVEWAY PAVEMENT REMOVAL (SQ YD)
1+26	RT	PE (BIT)	531	20	8	59
3+82	RT	PE (BIT)	344	13	5	38
23+09	LT	PE (BIT)	470	17	7	52
26+93	LT	PE (BIT)	817	30	13	91
39+86	RT	TRAIL (BIT)	340	13	5	38
47+23	RT	FE (BIT)	286	REMOVE		32
62+46	RT	PE (BIT)	223	8	3	25
63+77	RT	PE (BIT)	233	9	4	26
65+69	RT	PE (BIT)	250	9	4	28
65+90	RT	PE (BIT)	219	8	3	24
67+26	RT	PE (BIT)	241	9	4	27
73+94	RT	PE (BIT)	186	7	3	21
76+95	RT	PE (BIT)	353	13	5	39
80+02	RT	PE (BIT)	273	10	4	30
80+72	RT	PE (BIT)	374	14	6	42
84+21	LT	PE (BIT)	572	21	9	64
104+68	LT	PE (BIT)	412	15	6	46
105+61	LT	PE (BIT)	262	10	4	29
111+76	RT	PE (BIT)	407	15	6	45
112+47	LT	PE (BIT)	371	14	6	41
113+63	RT	PE (BIT)	223	8	3	25
113+71	LT	PE (BIT)	307	11	5	34
115+02	LT	PE (BIT)	337	12	5	37
116+89	RT	PE (BIT)	313	12	5	35
117+97	LT	PE (BIT)	372	14	6	41
124+08	LT	PE (BIT)	330	12	5	37
135+27	RT	PE (BIT)	656	24	10	73
136+58	RT	PE (BIT)	269	10	4	30
139+13	LT	PE (BIT)	408	15	6	45
141+01	LT	PE (BIT)	351	13	5	39
142+47	RT	PE (BIT)	301	11	5	33
143+93	RT	PE (BIT)	331	12	5	37
144+45	LT	PE (BIT)	361	13	6	40
145+00	RT	PE (BIT)	264	10	4	29
146+78	RT	PE (BIT)	322	12	5	36
147+58	RT	PE (BIT)	301	11	5	33
149+06	LT	PE (BIT)	240	9	4	27
149+59	LT	PE (BIT)	305	11	5	34
150+74	LT	PE (BIT)	243	9	4	27
TOTAL				484	202	1,489

9 SIDEROADS

ROAD NAME	LEFT OR RIGHT	BINDER COURSE AREA (SQ FT)	SURFACE COURSE AREA (SQ FT)	(112 LB/SQ YD/IN) HOT-MIX ASPHALT BINDER COURSE IL-19.0, N70 (TON)	HOT-MIX ASPHALT SURFACE COURSE MIX "D", N70 (TON)	HOT-MIX ASPHALT SURFACE REMOVAL VARIABLE DEPTH (SQ YD)	TEMPORARY PAVEMENT MARKING LINE 5" (FOOT)	THERMOPLASTIC PAVEMENT MARKING LINE 5" (FOOT)
HILLFARM ROAD	RT	667	1,981	11	18	220	120	120
WEDGEWOOD LANE	LT	1,462	3,290	24	31	366	198	198
OAK HILL ROAD	LT	488	1,513	8	14	168	233	233
BORDER LANE	RT	191	602	3	6	67	62	62
SHORELINE ROAD	LT	591	1,552	10	14	172	204	204
LAKEVIEW PLACE	RT	220	662	4	6	74	66	66
OXFORD ROAD	RT	199	632	3	6	70	57	57
ARROWHEAD LANE	LT	419	1,302	7	12	145	86	86
RUSTIC DRIVE	RT	452	1,279	7	12	142	106	106
HOMEWOOD LANE	RT	171	516	3	5	57	59	59
KIMBERLY ROAD	RT	848	2,265	14	21	252	140	140
KATHLEEN COURT	RT	233	821	4	8	91	65	65
HIDDEN POND LANE	RT	522	1,670	9	16	186	95	95
CLOVER HILL LANE	RT	526	1,466	9	14	163	110	110
INDIAN TRAIL ROAD	LT	551	1,581	9	15	176	102	102
TOTAL				125	198	2,349	1,703	1,703

10 PATCHING

LOCATION	HOT-MIX ASPHALT SURFACE REMOVAL (SQ YD)	TOTAL PATCHING AT 5% (SQ YD)	CLASS D PATCHES TYPE I 6 INCH (SQ YD)	TYPE II 6 INCH (SQ YD)	TYPE III 6 INCH (SQ YD)	TYPE IV 6 INCH (SQ YD)
PAVEMENT	32,727	1,636	164	245	736	491
TOTAL			164	245	736	491

NOTE: 6'' AVERAGE DEPTH AFTER MILLING FROM PAVEMENT HISTORY

11 GUARDRAIL

FROM STATION	TO STATION	LEFT OR RIGHT	STEEL PLATE BEAM GUARDRAIL TYPE B 9 FOOT POSTS (FOOT)	TRAFFIC BARRIER TERMINAL TYPE 1 SPECIAL TANGENT (EACH)	GUARDRAIL REMOVAL (FOOT)	GUARDRAIL REFLECTORS (EACH)
48+86	49+38	RT		1		
48+86	54+15	RT				21
49+38	53+65	RT	412.5			
49+83	53+82	RT			384	
50+06	51+80	LT			190	
50+11	50+61	LT		1		
50+11	51+76	LT				8
50+61	51+26	LT	75.0			
51+26	51+76	LT		1		
53+65	54+15	RT		1		
TOTAL			487.5	4	574	29

12 WORK ZONE PAVEMENT MARKINGS

FROM STATION	TO STATION	LEFT OR RIGHT	DESCRIPTION	NUMBER OF APPLICATIONS	SHORT TERM PAVEMENT MARKING (FOOT)	NUMBER OF APPLICATIONS	PAVEMENT MARKING TAPE TYPE III 4" (FOOT)	SHORT TERM PAVEMENT MARKING REMOVAL (SQ FT)
0+24	2+51	LT	TURN LANE	2	454	1	227	75.7
0+24	77+98		4'/40' DOUBLE DASH	2	2,832	1	1,416	472.0
0+34	0+66		LEFT TURN ONLY	2	218	1	109	36.3
0+34	0+66	LT	RIGHT TURN ONLY	2	218	1	109	36.3
2+09	2+41		LEFT TURN ONLY	2	218	1	109	36.3
2+09	2+41	LT	RIGHT TURN ONLY	2	218	1	109	36.3
72+04	73+07	LT	TURN LANE	2	206	1	103	34.3
72+65	72+97	LT	RIGHT TURN ONLY	2	218	1	109	36.3
76+10	77+98	RT	TURN LANE	2	376	1	188	62.7
76+20	76+52	RT	RIGHT TURN ONLY	2	218	1	109	36.3
77+56	77+88	RT	RIGHT TURN ONLY	2	218	1	109	36.3
79+44	80+46	LT	TURN LANE	2	204	1	102	34.0
79+44	84+86		4'/40' DOUBLE DASH	2	208	1	104	34.7
80+04	80+36	LT	RIGHT TURN ONLY	2	218	1	109	36.3
103+22	153+86		4'/40' DOUBLE DASH	2	1,856	1	928	309.3
TOTAL					7,880		3,940	1,313

13 PAVEMENT MARKINGS

FROM STATION	TO STATION	LEFT OR RIGHT	DESCRIPTION	TEMPORARY PAVEMENT MARKING LETTERS AND SYMBOLS (SQ FT)	TEMPORARY PAVEMENT MARKING LINE 4" (FOOT)	TEMPORARY PAVEMENT MARKING LINE 5" (FOOT)	TEMPORARY PAVEMENT MARKING LINE 6" (FOOT)	TEMPORARY PAVEMENT MARKING LINE 24" (FOOT)	THERMOPLASTIC PAVEMENT MARKING LINE 5" (FOOT)	PAINT PAVEMENT MARKING LINE 5" (FOOT)	GROOVED THERMOPLASTIC PAVEMENT MARKING LETTERS AND SYMBOLS (SQ FT)	GROOVED THERMOPLASTIC PAVEMENT MARKING LINE 4" (FOOT)	GROOVED THERMOPLASTIC PAVEMENT MARKING LINE 6" (FOOT)	GROOVED THERMOPLASTIC PAVEMENT MARKING LINE 24" (FOOT)
0+12	6+54	RT	EDGE LINE			642				642				
0+21	16+89	LT	EDGE LINE			1,668				1,668				
0+22	0+24		STOP BAR					28						28
0+24	2+51	LT	TURN LANE				227						227	
0+24	77+98		DOUBLE YELLOW		15,548							15,548		
0+34	0+66		LEFT TURN ONLY	36.4							36.4			
0+34	0+66	LT	RIGHT TURN ONLY	36.4							36.4			
2+09	2+41		LEFT TURN ONLY	36.4							36.4			
2+09	2+41	LT	RIGHT TURN ONLY	36.4							36.4			
2+51	4+68	LT	2'/6' DOTTED				52						52	
7+54	69+04	RT	EDGE LINE			6,150				6,150				
18+52	38+84	LT	EDGE LINE			2,032				2,032				
41+12	70+36	LT	EDGE LINE			2,924				2,924				
69+49	72+29	RT	EDGE LINE			280				280				
72+04	73+07	LT	TURN LANE				103						103	
72+30	78+01	LT	EDGE LINE			571				571				
72+65	72+97	LT	RIGHT TURN ONLY	36.4							36.4			
72+78	77+78	RT	EDGE LINE			500				500				
76+10	77+98	RT	TURN LANE				188						188	
76+20	76+52	RT	RIGHT TURN ONLY	36.4							36.4			
77+56	77+88	RT	RIGHT TURN ONLY	36.4							36.4			
77+78	78+19	RT	EDGE LINE			54				54				
77+98	78+00	RT	STOP BAR					30						30
78+01	78+51	LT	EDGE LINE			55				55				
79+06	82+06	RT	EDGE LINE			300				300				
79+23	84+86	LT	EDGE LINE			549				549				
79+42	79+44	LT	STOP BAR					25						25
79+44	80+46	LT	TURN LANE				102						102	
79+44	84+86		DOUBLE YELLOW		1,056							1,056		
80+04	80+36	LT	RIGHT TURN ONLY	36.4							36.4			
82+62	84+86	RT	EDGE LINE			224				224				
103+22	108+44	RT	EDGE LINE			522				522				
103+22	108+47	LT	EDGE LINE			525				525				
103+22	153+86		DOUBLE YELLOW		10,128							10,128		
109+20	118+39	RT	EDGE LINE			919				919				
109+25	146+26	LT	EDGE LINE			3,701				3,701				
118+84	121+42	RT	EDGE LINE			258				258				
122+70	124+00	RT	EDGE LINE			130				130				
124+79	128+25	RT	EDGE LINE			346				346				
129+10	138+57	RT	EDGE LINE			947				947				
139+32	153+86	RT	EDGE LINE			1,454				1,454				
147+32	153+86	LT	EDGE LINE			654				654				
SIDEROADS (SEE SCHEDULE 9)			EDGE LINE RADII			1,703			1,703					
TOTAL				**291.2**	**26,732**	**27,108**	**672**	**83**	**1,703**	**25,405**	**291.2**	**26,732**	**672**	**83**

14 REFLECTIVE PAVEMENT MARKERS

FROM STATION	TO STATION	LEFT OR RIGHT	RAISED REFLECTIVE PAVEMENT MARKER REMOVAL (EACH)	RECESSED REFLECTIVE PAVEMENT MARKER (EACH)
0+24	2+51	LT		6
0+24	5+44			28
5+84	8+24	LT		4
42+71	45+11	RT		4
45+51	57+91			64
58+31	60+71	LT		4
129+61	132+01	RT		4
132+41	138+01			30
138+41	140+81	LT		4
PROJECT			431	
TOTAL			**431**	**148**

15 DETECTOR LOOPS

STATION	LEFT OR RIGHT	OFFSET (FOOT)	LOOP (FOOT)	LEAD (FOOT)	DETECTOR LOOP REPLACEMENT (FOOT)
77+77	RT	6.0	24	16	40
77+77	RT	18.0	24	3	27
77+92	RT	6.0	24	19	43
77+92	RT	19.4	30	5	35
78+07	RT	6.0	24	27	51
78+07	RT	24.2	52	5	57
79+36	LT	5.5	24	20	44
79+36	LT	18.8	34	5	39
79+51	LT	5.5	24	17	41
79+51	LT	16.5	24	4	28
79+66	LT	5.5	24	17	41
79+66	LT	16.5	24	4	28
TOTAL					**474**

16 PILLARS

STATION	LEFT OR RIGHT	PILLAR REMOVAL (EACH)
41+59	RT	1
46+39	RT	1
47+10	RT	1
47+28	RT	1
55+75	RT	1
TOTAL		**5**

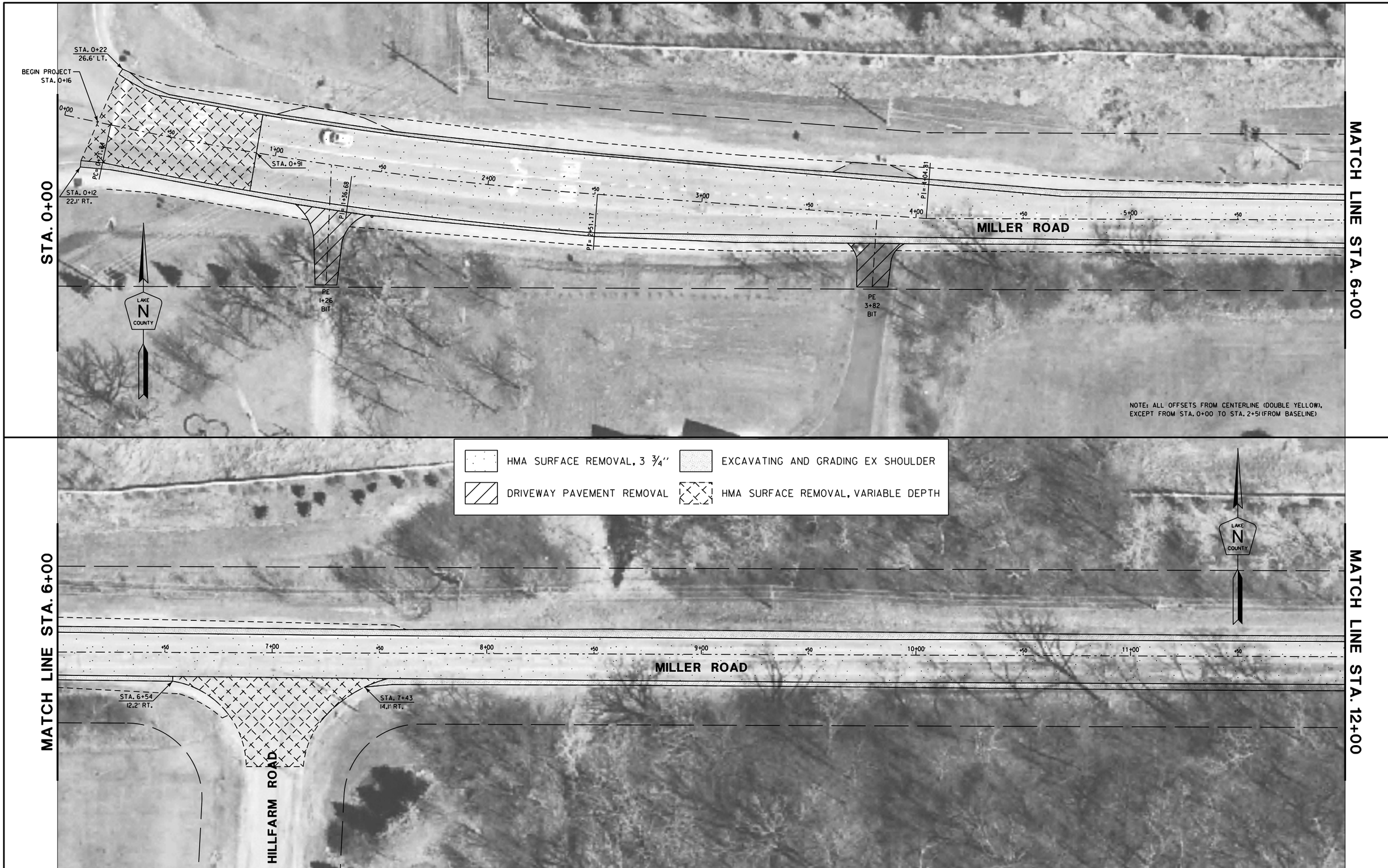

REVISIONS / REMARKS					
NO.	DESCRIPTION	DATE	BY	SURVEYOR:	/
		/ /		DSGNR/LIAISON:	
		/ /		PLOTTED BY:	HDI8572 3/15/2016

SCALES
VERT 5 0
HORIZ. 0 20 40

MILLER ROAD RESURFACING

LakeCounty
Division of Transportation

REMOVAL SHEET

STATION 0+00 TO STATION 12+00

ROUTE	SECTION	SECTION NUMBER	SHEET	SHEETS
CH2	118	14-00118-11-RS	9	79

FILE NAME: U:\Design\Ruiz\14-00118-11-RS Miller Road Resurfacing\Plans\14-00118-11-RS removal sheet 1.dgn

REVISIONS / REMARKS					
NO.	DESCRIPTION	DATE	BY	SURVEYOR:	/
		/ /		DSGNR/LIAISON:	
		/ /		PLOTTED BY:	HD18572 3/15/2016

VERT 5 0

SCALES
HORIZ. 0 20 40

MILLER ROAD RESURFACING

LakeCounty
Division of Transportation

REMOVAL SHEET

STATION 12+00 TO STATION 24+00

ROUTE	SECTION	SECTION NUMBER	SHEET	SHEETS
CH2	118	14-00118-11-RS	10	79

FILE NAME: U:\Design\Ruiz\14-00118-11-RS Miller Road Resurfacing\Plans\14-00118-11-RS removal sheet 2.dgn

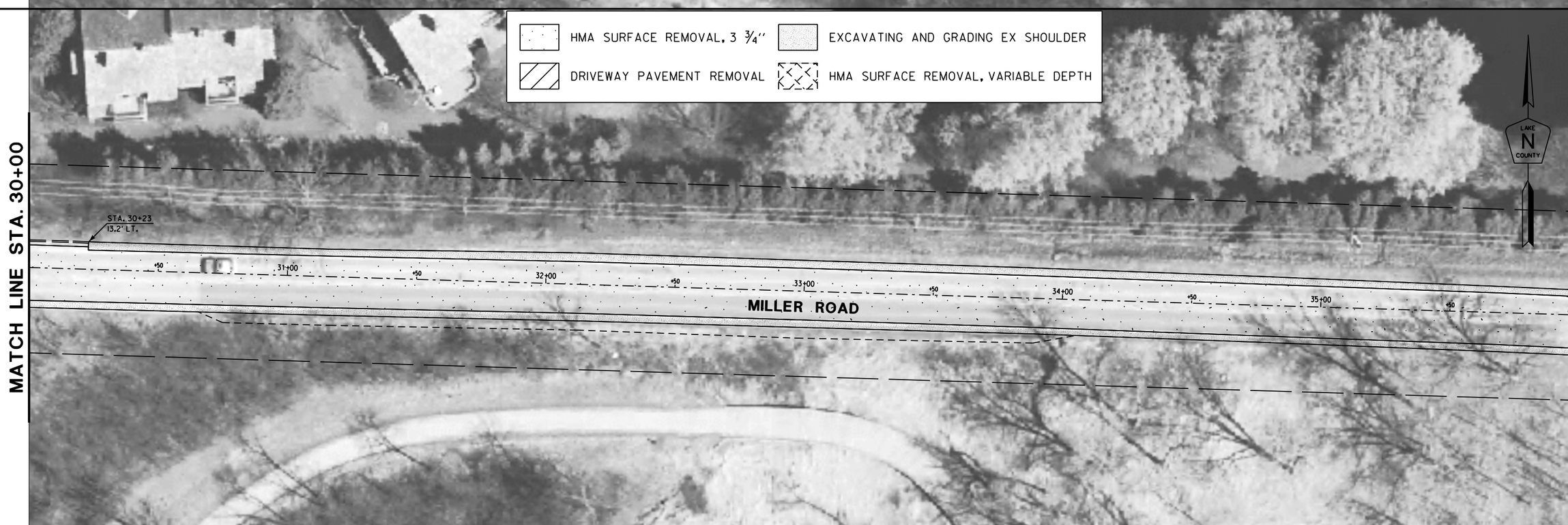

REVISIONS / REMARKS					
NO.	DESCRIPTION	DATE	BY	SURVEYOR:	/
		/ /		DSGNR/LIAISON:	
		/ /		PLOTTED BY:	HD18572 3/15/2016

SCALES
VERT. 0 5
HORIZ. 0 20 40

MILLER ROAD RESURFACING

LakeCounty
Division of Transportation

REMOVAL SHEET

STATION 24+00 TO STATION 36+00

ROUTE	SECTION	SECTION NUMBER	SHEET	SHEETS
CH2	118	14-00118-11-RS	11	79

FILE NAME: U:\Design\Ruiz\14-00118-11-RS Miller Road Resurfacing\Plans\14-00118-11-RS removal sheet 3.dgn

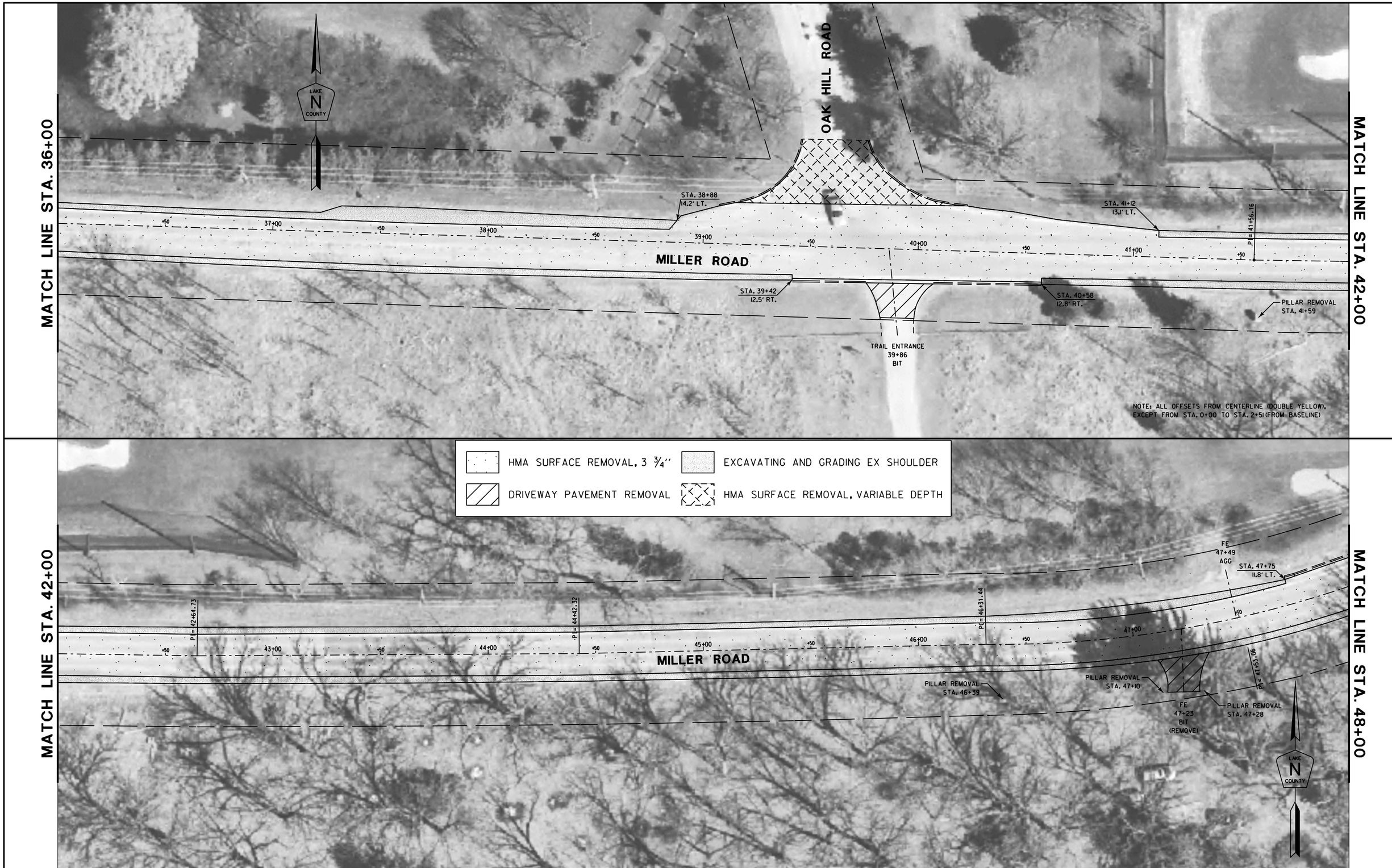

REVISIONS / REMARKS					
NO.	DESCRIPTION	DATE	BY	SURVEYOR:	/
		/ /		DSGNR/LIAISON:	
		/ /		PLOTTED BY:	HDI8572 3/15/2016

SCALES
VERT 5 0
HORIZ. 0 20 40

MILLER ROAD RESURFACING

LakeCounty
Division of Transportation

REMOVAL SHEET

STATION 36+00 TO STATION 48+00

ROUTE	SECTION	SECTION NUMBER	SHEET	SHEETS
CH2	118	14-00118-11-RS	12	79

FILE NAME: U:\Design\Ruiz\14-00118-11-RS Miller Road Resurfacing\Plans\14-00118-11-RS removal sheet 4.dgn

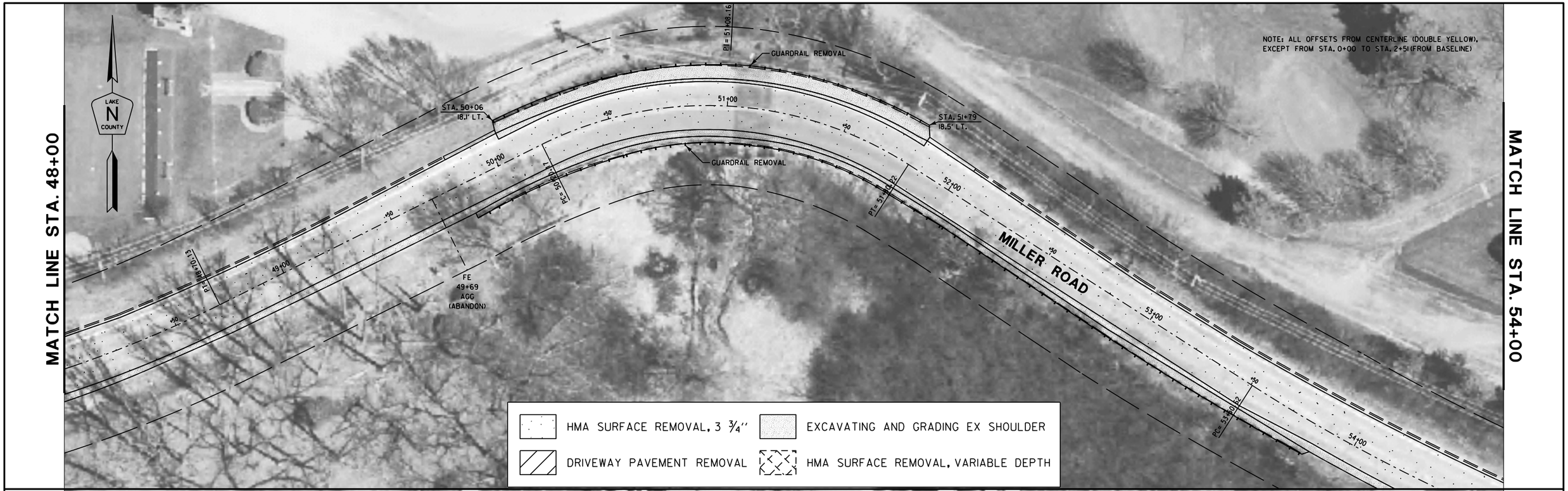

REVISIONS / REMARKS					
NO.	DESCRIPTION	DATE	BY	SURVEYOR:	/
		/ /		DSGNR/LIAISON:	
		/ /		PLOTTED BY:	HDI8572 3/15/2016

VERT 5 0

SCALES HORIZ. 0 20 40

MILLER ROAD RESURFACING

LakeCounty Division of Transportation

REMOVAL SHEET

STATION 48+00 TO STATION 60+00

ROUTE	SECTION	SECTION NUMBER	SHEET	SHEETS
CH2	118	14-00118-11-RS	13	79

FILE NAME: U:\Design\Ruiz\14-00118-11-RS Miller Road Resurfacing\Plans\14-00118-11-RS removal sheet 5.dgn

REVISIONS / REMARKS					
NO.	DESCRIPTION	DATE	BY	SURVEYOR:	/
		/ /		DSGNR/LIAISON:	
		/ /		PLOTTED BY:	HDI8572 3/15/2016

VERT 5 0 — SCALES HORIZ. 0 20 40

MILLER ROAD RESURFACING

LakeCounty Division of Transportation

REMOVAL SHEET

STATION 60+00 TO STATION 72+00

ROUTE	SECTION	SECTION NUMBER	SHEET	SHEETS
CH2	118	14-00118-11-RS	14	79

FILE NAME: U:\Design\Ruiz\14-00118-11-RS Miller Road Resurfacing\Plans\14-00118-11-RS removal sheet 6.dgn

REVISIONS / REMARKS					
NO.	DESCRIPTION	DATE	BY	SURVEYOR:	/
		/ /		DSGNR/LIAISON:	
		/ /		PLOTTED BY:	HDI8572 3/15/2016

SCALES
VERT 5 0
HORIZ. 0 20 40

MILLER ROAD RESURFACING

LakeCounty
Division of Transportation

REMOVAL SHEET

STATION 72+00 TO STATION 84+00

ROUTE	SECTION	SECTION NUMBER	SHEET	SHEETS
CH2	118	14-00118-11-RS	15	79

FILE NAME: U:\Design\Ruiz\14-00118-11-RS Miller Road Resurfacing\Plans\14-00118-11-RS removal sheet 7.dgn

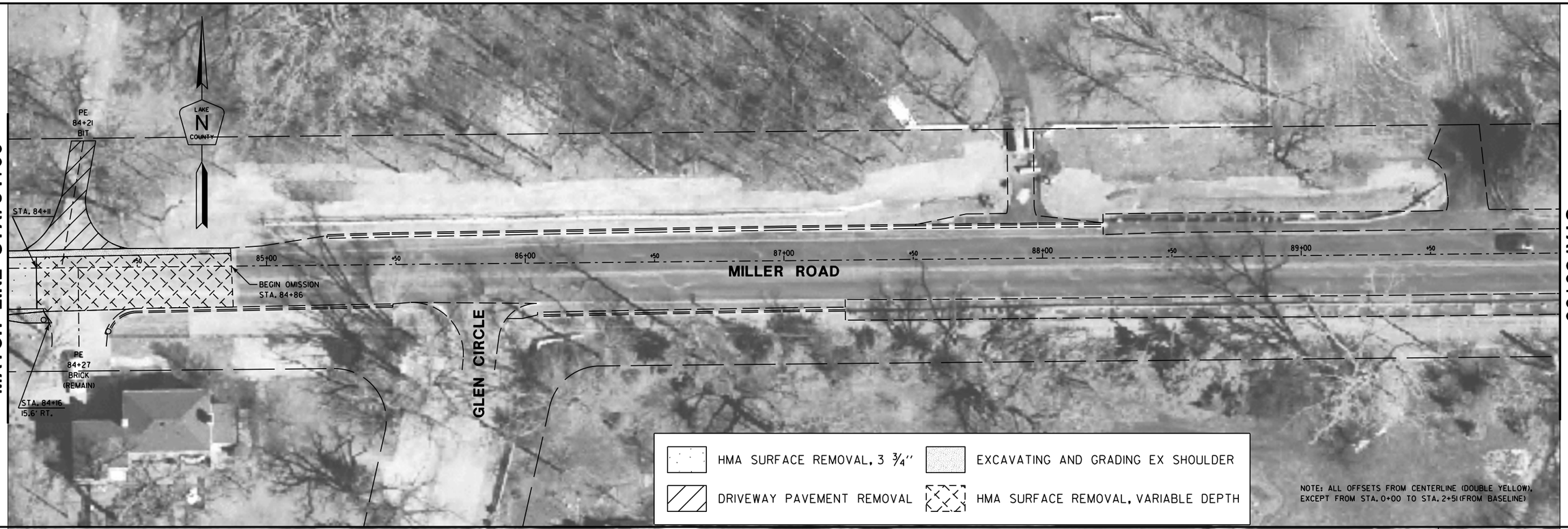

REVISIONS / REMARKS					
NO.	DESCRIPTION	DATE	BY	SURVEYOR:	/
		/ /		DSGNR/LIAISON:	
		/ /		PLOTTED BY:	HDI8572 3/15/2016

VERT 5 0 — SCALES HORIZ. 0 20 40

MILLER ROAD RESURFACING

LakeCounty Division of Transportation

REMOVAL SHEET

STATION 84+00 TO STATION 109+00

ROUTE	SECTION	SECTION NUMBER	SHEET	SHEETS
CH2	118	14-00118-11-RS	16	79

FILE NAME: U:\Design\Ruiz\14-00118-11-RS Miller Road Resurfacing\Plans\14-00118-11-RS removal sheet 8.dgn

REVISIONS / REMARKS					
NO.	DESCRIPTION	DATE	BY	SURVEYOR:	/
		/ /		DSGNR/LIAISON:	
		/ /		PLOTTED BY:	HD18572 3/15/2016

VERT 5 0

SCALES
HORIZ.
0 20 40

MILLER ROAD RESURFACING

LakeCounty
Division of Transportation

REMOVAL SHEET

STATION 109+00 TO STATION 121+00

ROUTE	SECTION	SECTION NUMBER	SHEET	SHEETS
CH2	118	14-00118-11-RS	17	79

FILE NAME: U:\Design\Ruiz\14-00118-11-RS Miller Road Resurfacing\Plans\14-00118-11-RS removal sheet 9.dgn

NOTE: ALL OFFSETS FROM CENTERLINE (DOUBLE YELLOW), EXCEPT FROM STA. 0+00 TO STA. 2+51 (FROM BASELINE)

MATCH LINE STA. 121+00

MATCH LINE STA. 127+00

PE 124+08 BIT

PI = 121+67.46

122+00 +50 123+00 +50 124+00 +50 125+00 +50 126+00 +50

MILLER ROAD

STA. 121+42 12.7' RT.

STA. 122+65 12.0' RT.

STA. 124+00 13.1' RT.

STA. 124+79 12.9' RT.

KIMBERLY ROAD

KATHLEEN COURT

LAKE N COUNTY

HMA SURFACE REMOVAL, 3 ¾"

EXCAVATING AND GRADING EX SHOULDER

DRIVEWAY PAVEMENT REMOVAL

HMA SURFACE REMOVAL, VARIABLE DEPTH

MATCH LINE STA. 127+00

MATCH LINE STA. 133+00

PI = 128+28.36

STA. 128+70 14.5' LT.

PI = 130+55.77

STA. 132+00 11.7' LT.

128+00 +50 129+00 +50 130+00 +50 131+00 +50 132+00 +50

MILLER ROAD

STA. 128+25 13.0' RT.

STA. 129+05 11.8' RT.

STA. 130+76 12.7' RT.

HIDDEN POND LANE

LAKE N COUNTY

REVISIONS / REMARKS					
NO.	DESCRIPTION	DATE	BY	SURVEYOR:	/
		/ /		DSGNR/LIAISON:	
		/ /		PLOTTED BY:	HD18572 3/15/2016

VERT 5 0

SCALES HORIZ. 0 20 40

MILLER ROAD RESURFACING

LakeCounty Division of Transportation

REMOVAL SHEET

STATION 121+00 TO STATION 133+00

ROUTE	SECTION	SECTION NUMBER	SHEET	SHEETS
CH2	118	14-00118-11-RS	18	79

FILE NAME: U:\Design\Ruiz\14-00118-11-RS Miller Road Resurfacing\Plans\14-00118-11-RS removal sheet 10.dgn

REVISIONS / REMARKS					
NO.	DESCRIPTION	DATE	BY	SURVEYOR:	/
		/ /		DSGNR/LIAISON:	
		/ /		PLOTTED BY:	HDI8572 3/16/2016

VERT 5 0 — SCALES HORIZ. 0 20 40

MILLER ROAD RESURFACING

LakeCounty Division of Transportation

REMOVAL SHEET

STATION 133+00 TO STATION 145+00

ROUTE	SECTION	SECTION NUMBER	SHEET	SHEETS
CH2	118	14-00118-11-RS	19	79

FILE NAME: U:\Design\Ruiz\14-00118-11-RS Miller Road Resurfacing\Plans\14-00118-11-RS removal sheet 11.dgn

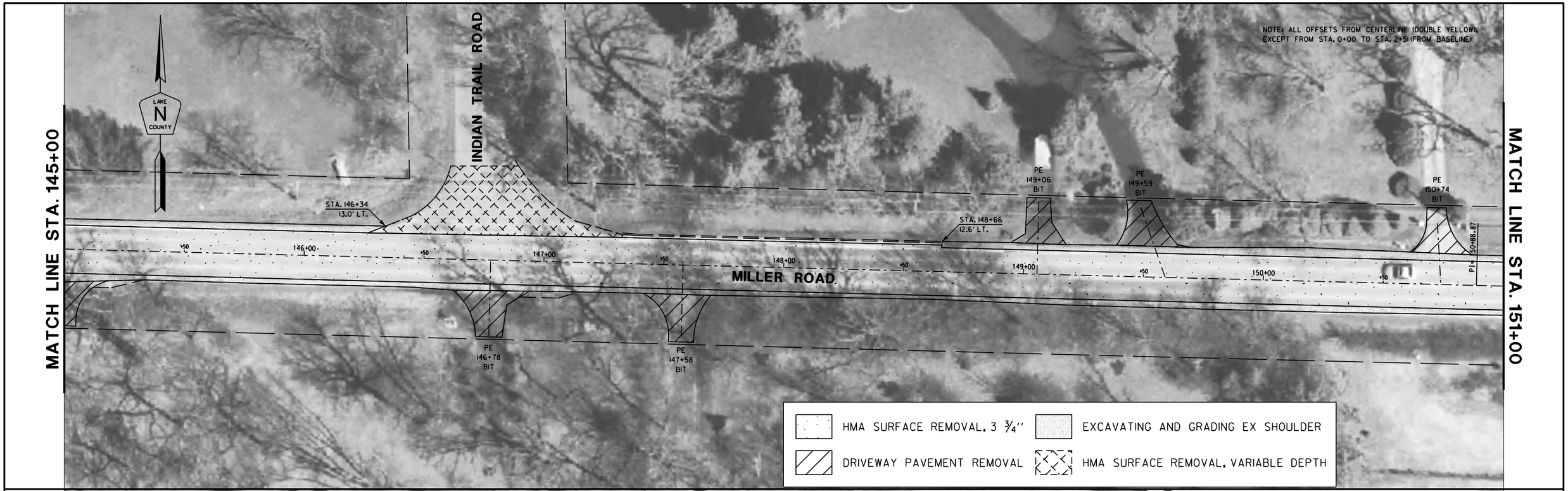

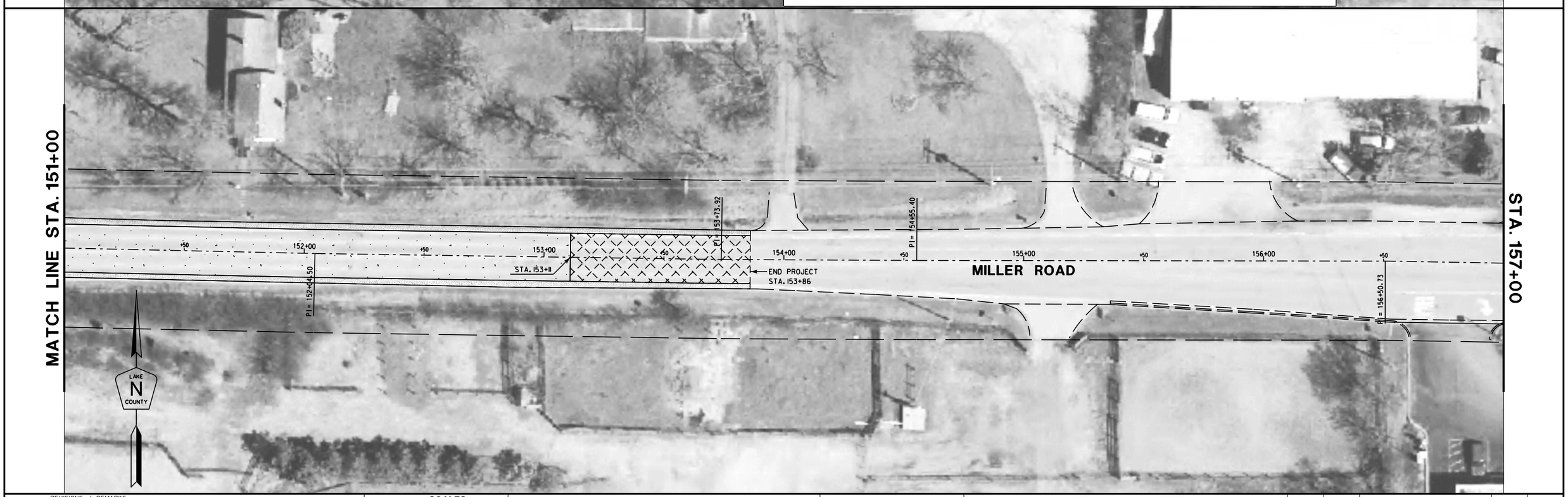

REVISIONS / REMARKS					
NO.	DESCRIPTION	DATE	BY	SURVEYOR:	/
		/ /		DSGNR/LIAISON:	
		/ /		PLOTTED BY:	HDI8572 3/16/2016

SCALES
VERT 5 0
HORIZ. 0 20 40

MILLER ROAD RESURFACING

LakeCounty
Division of Transportation

REMOVAL SHEET

STATION 145+00 TO STATION 157+00

ROUTE	SECTION	SECTION NUMBER	SHEET	SHEETS
CH2	118	14-00118-11-RS	20	79

FILE NAME: U:\Design\Ruiz\14-00118-11-RS Miller Road Resurfacing\Plans\14-00118-11-RS removal sheet 12.dgn

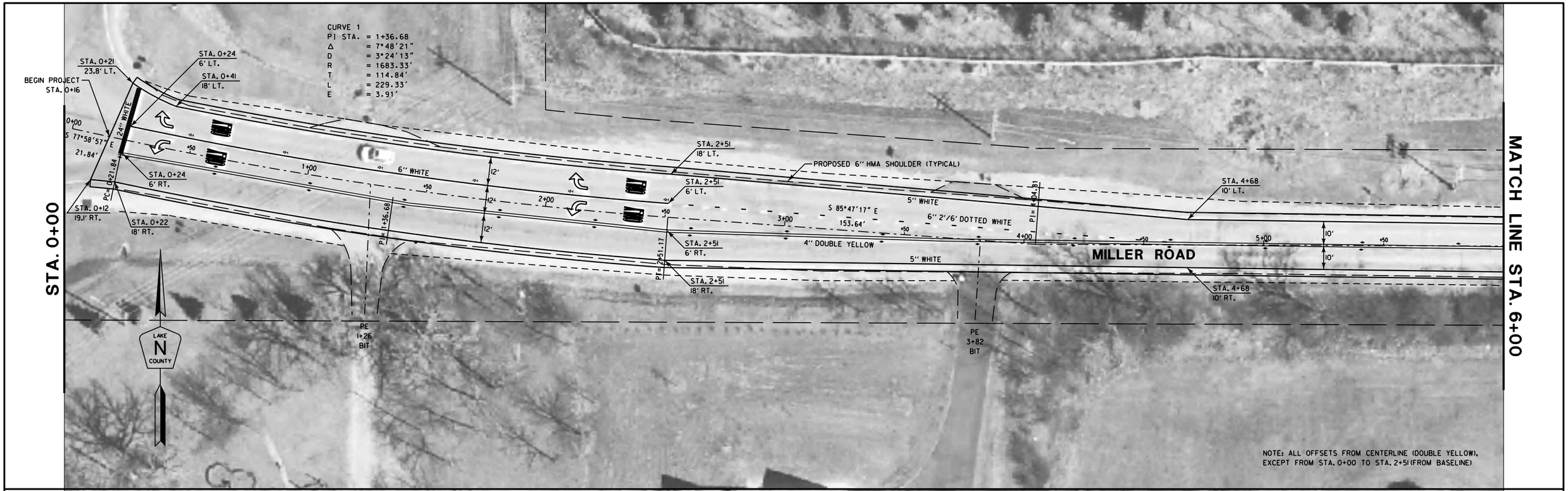

REVISIONS / REMARKS					
NO.	DESCRIPTION	DATE	BY	SURVEYOR:	/
		/ /		DSGNR/LIAISON:	
		/ /		PLOTTED BY:	HDI8572 3/16/2016

VERT 5 0

SCALES
HORIZ.
0 20 40

MILLER ROAD RESURFACING

LakeCounty
Division of Transportation

PLAN SHEET

STATION 0+00 TO STATION 12+00

ROUTE	SECTION	SECTION NUMBER	SHEET	SHEETS
CH2	118	14-00118-11-RS	21	79

FILE NAME: U:\Design\Ruiz\14-00118-11-RS Miller Road Resurfacing\Plans\14-00118-11-RS plan sheet 1.dgn

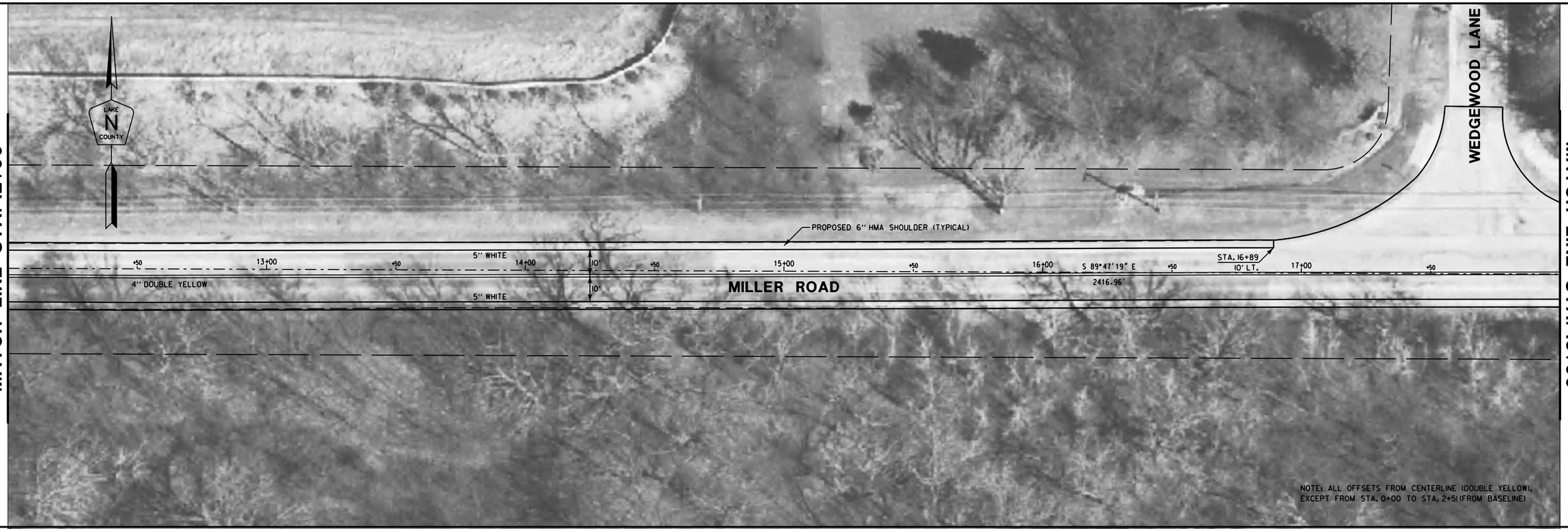

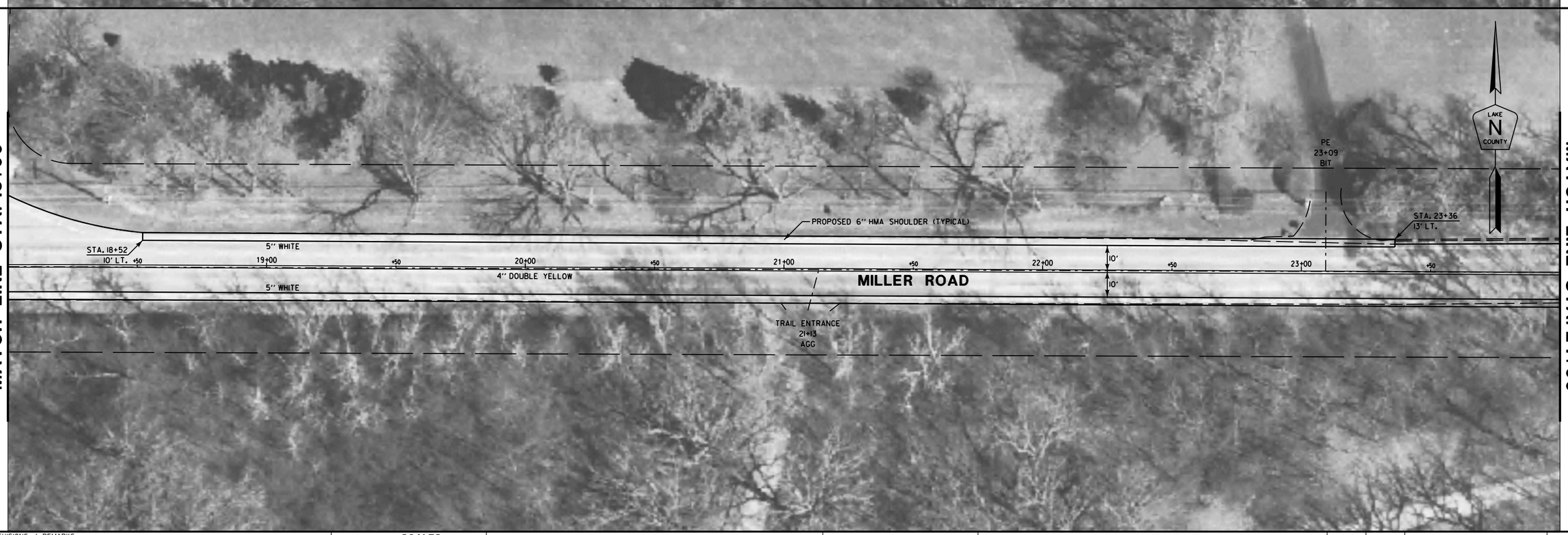

REVISIONS / REMARKS					
NO.	DESCRIPTION	DATE	BY	SURVEYOR:	/
		/ /		DSGNR/LIAISON:	
		/ /		PLOTTED BY:	HD18572 3/16/2016

VERT 5 0

SCALES
HORIZ.
0 20 40

MILLER ROAD RESURFACING

LakeCounty
Division of Transportation

PLAN SHEET

STATION 12+00 TO STATION 24+00

ROUTE	SECTION	SECTION NUMBER	SHEET	SHEETS
CH2	118	14-00118-11-RS	22	79

FILE NAME: U:\Design\Ruiz\14-00118-11-RS Miller Road Resurfacing\Plans\14-00118-11-RS plan sheet 2.dgn

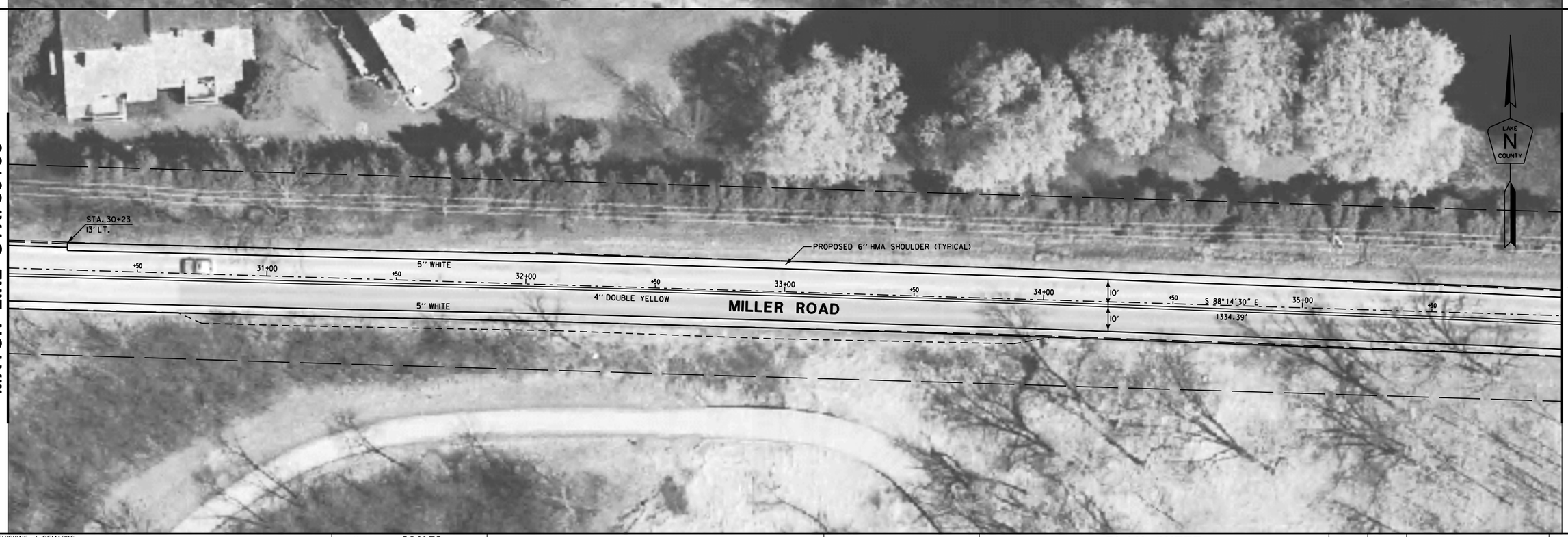

REVISIONS / REMARKS					
NO.	DESCRIPTION	DATE	BY	SURVEYOR:	/
		/ /		DSGNR/LIAISON:	
		/ /		PLOTTED BY:	HD18572 3/16/2016

VERT 5 0

SCALES
HORIZ.
0 20 40

MILLER ROAD RESURFACING

LakeCounty
Division of Transportation

PLAN SHEET

STATION 24+00 TO STATION 36+00

ROUTE	SECTION	SECTION NUMBER	SHEET	SHEETS
CH2	118	14-00118-11-RS	23	79

FILE NAME: U:\Design\Ruiz\14-00118-11-RS Miller Road Resurfacing\Plans\14-00118-11-RS plan sheet 3.dgn

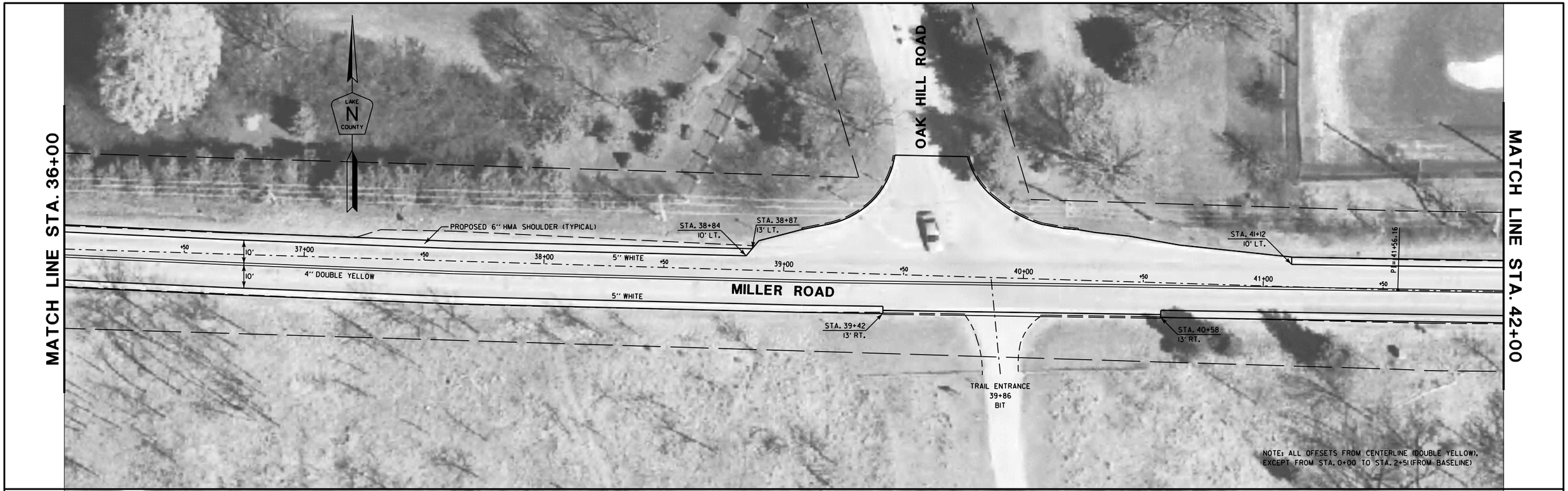

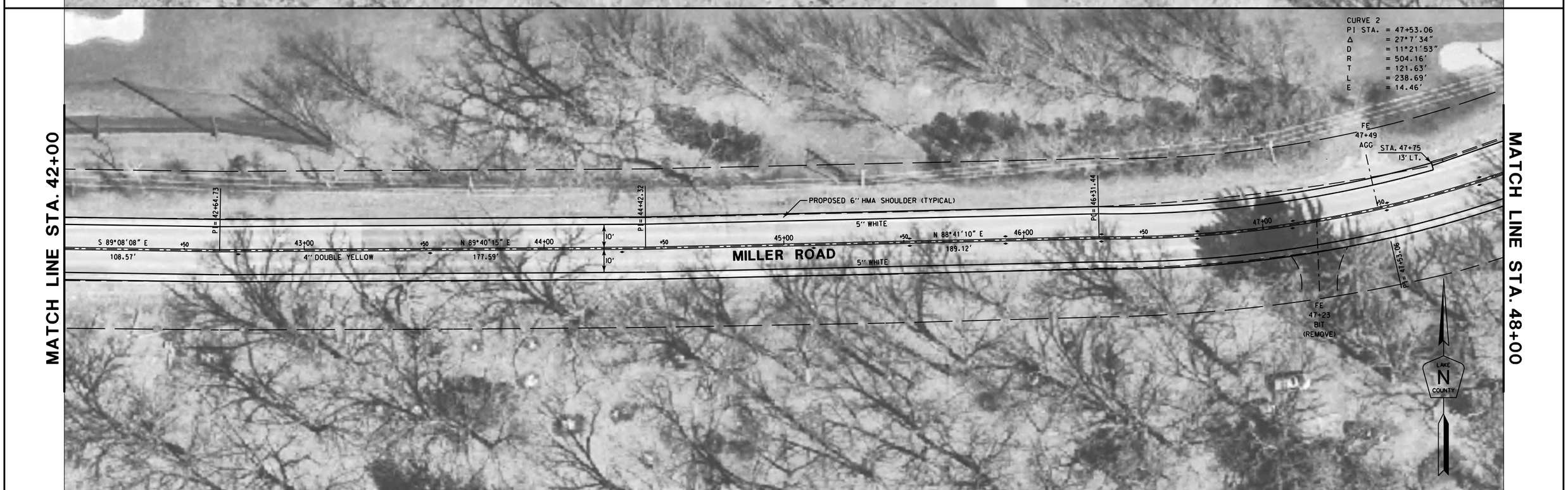

REVISIONS / REMARKS					
NO.	DESCRIPTION	DATE	BY	SURVEYOR:	/
		/ /		DSGNR/LIAISON:	
		/ /		PLOTTED BY:	HD18572 3/16/2016

VERT 5 0 — SCALES HORIZ. 0 20 40

MILLER ROAD RESURFACING

LakeCounty Division of Transportation

PLAN SHEET

STATION 36+00 TO STATION 48+00

ROUTE	SECTION	SECTION NUMBER	SHEET	SHEETS
CH2	118	14-00118-11-RS	24	79

FILE NAME: U:\Design\Ruiz\14-00118-11-RS Miller Road Resurfacing\Plans\14-00118-11-RS plan sheet 4.dgn

MATCH LINE STA. 48+00

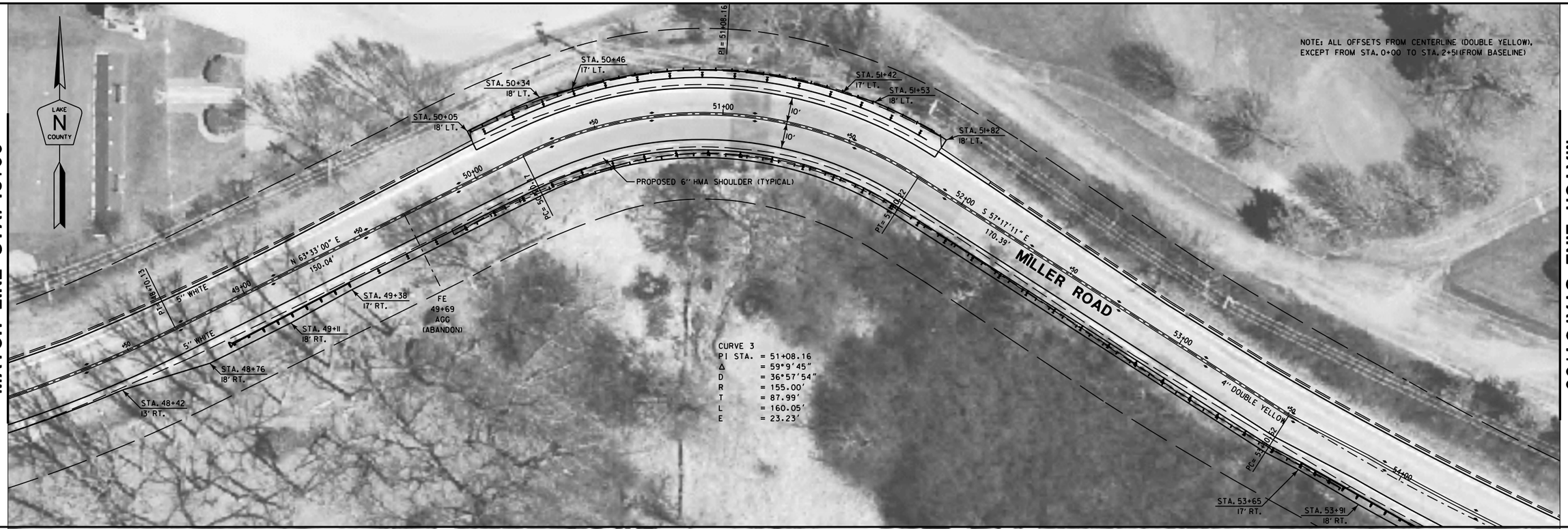

MATCH LINE STA. 54+00

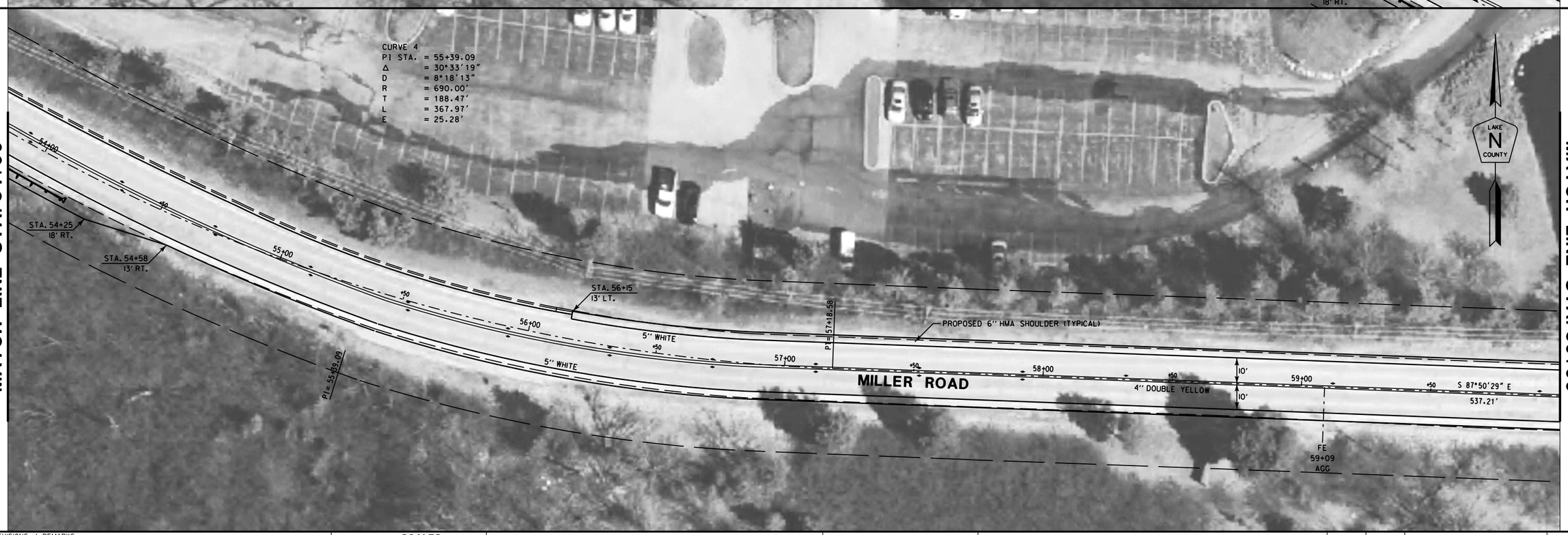

MATCH LINE STA. 60+00

REVISIONS / REMARKS					
NO.	DESCRIPTION	DATE	BY	SURVEYOR:	/
		/ /		DSGNR/LIAISON:	
		/ /		PLOTTED BY:	HDI8572 3/16/2016

VERT 5 0

SCALES
HORIZ.
0 20 40

MILLER ROAD RESURFACING

LakeCounty
Division of Transportation

PLAN SHEET

STATION 48+00 TO STATION 60+00

ROUTE	SECTION	SECTION NUMBER	SHEET	SHEETS
CH2	118	14-00118-11-RS	25	79

FILE NAME: U:\Design\Ruiz\14-00118-11-RS Miller Road Resurfacing\Plans\14-00118-11-RS plan sheet 5.dgn

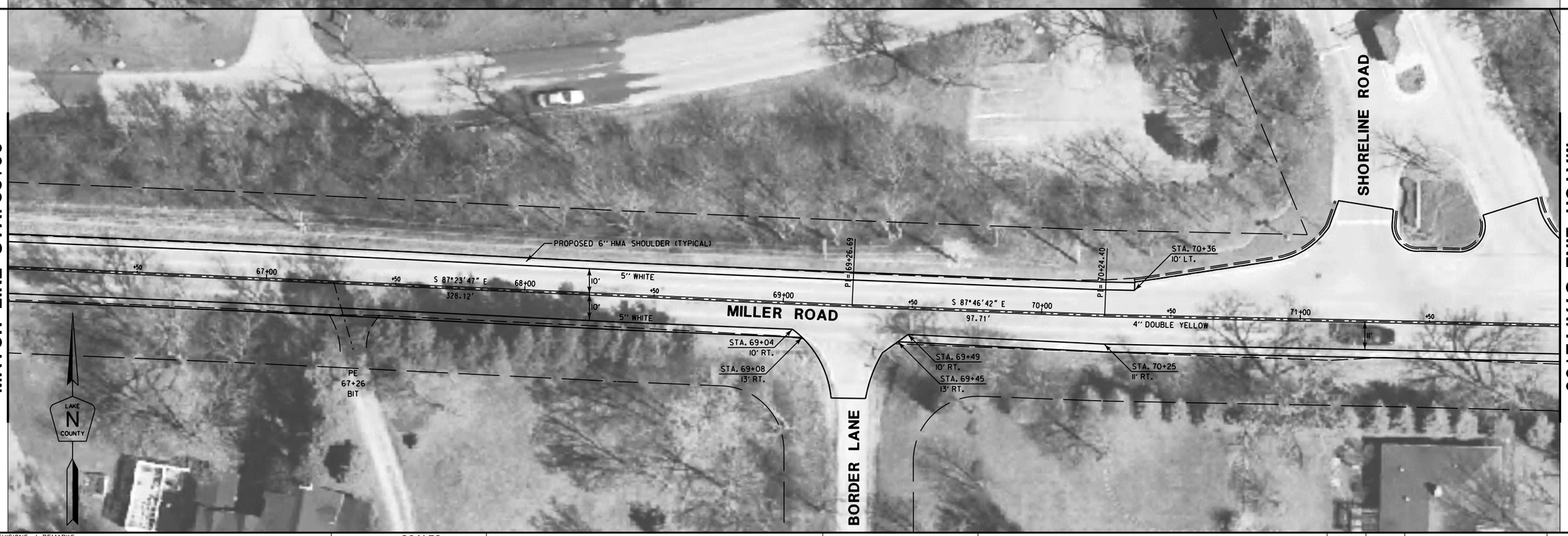

REVISIONS / REMARKS					
NO.	DESCRIPTION	DATE	BY	SURVEYOR:	/
		/ /		DSGNR/LIAISON:	
		/ /		PLOTTED BY:	HDI8572 3/16/2016

VERT 5 0

SCALES
HORIZ.
0 20 40

MILLER ROAD RESURFACING

LakeCounty
Division of Transportation

PLAN SHEET

STATION 60+00 TO STATION 72+00

ROUTE	SECTION	SECTION NUMBER	SHEET	SHEETS
CH2	118	14-00118-11-RS	26	79

FILE NAME: U:\Design\Ruiz\14-00118-11-RS Miller Road Resurfacing\Plans\14-00118-11-RS plan sheet 6.dgn

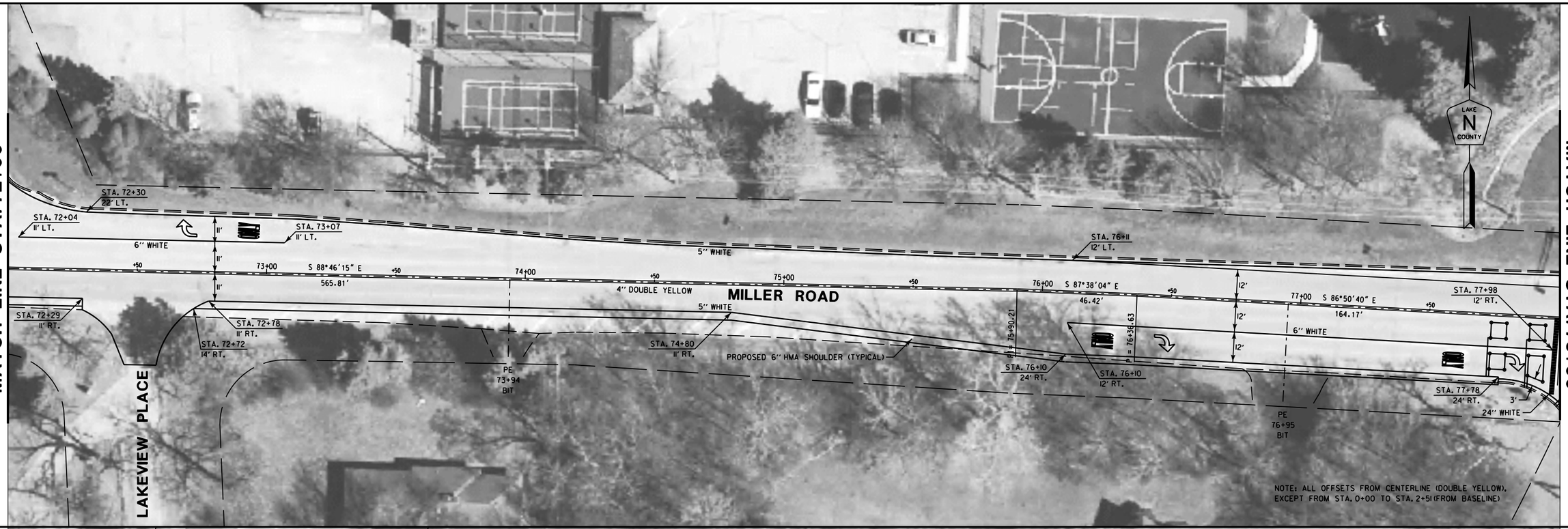

REVISIONS / REMARKS					
NO.	DESCRIPTION	DATE	BY	SURVEYOR:	/
		/ /		DSGNR/LIAISON:	
		/ /		PLOTTED BY:	HD18572 3/16/2016

VERT 5 0

SCALES
HORIZ.
0 20 40

MILLER ROAD RESURFACING

LakeCounty
Division of Transportation

PLAN SHEET

STATION 72+00 TO STATION 84+00

ROUTE	SECTION	SECTION NUMBER	SHEET	SHEETS
CH2	118	14-00118-11-RS	27	79

FILE NAME: U:\Design\Ruiz\14-00118-11-RS Miller Road Resurfacing\Plans\14-00118-11-RS plan sheet 7.dgn

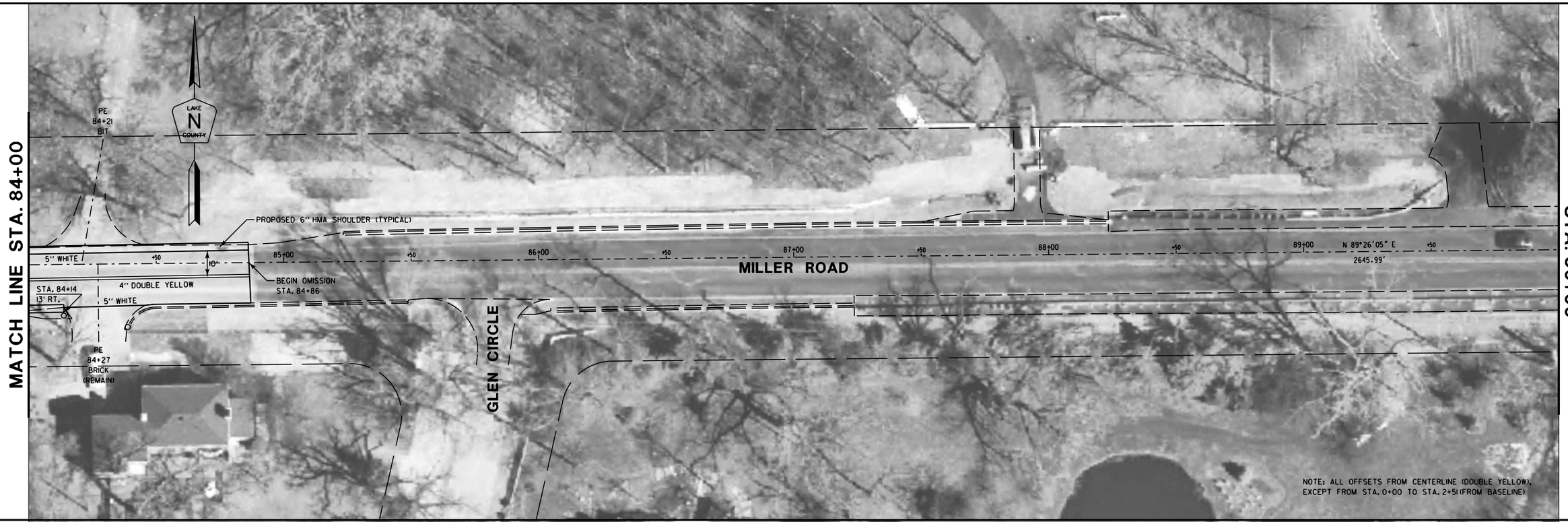

REVISIONS / REMARKS					
NO.	DESCRIPTION	DATE	BY	SURVEYOR:	/
		/ /		DSGNR/LIAISON:	
		/ /		PLOTTED BY:	HD18572 3/16/2016

VERT 5 0

SCALES
HORIZ.
0 20 40

MILLER ROAD RESURFACING

LakeCounty
Division of Transportation

PLAN SHEET
STATION 84+00 TO STATION 109+00

ROUTE	SECTION	SECTION NUMBER	SHEET	SHEETS
CH2	118	14-00118-11-RS	28	79

FILE NAME: U:\Design\Ruiz\14-00118-11-RS Miller Road Resurfacing\Plans\14-00118-11-RS plan sheet 8.dgn

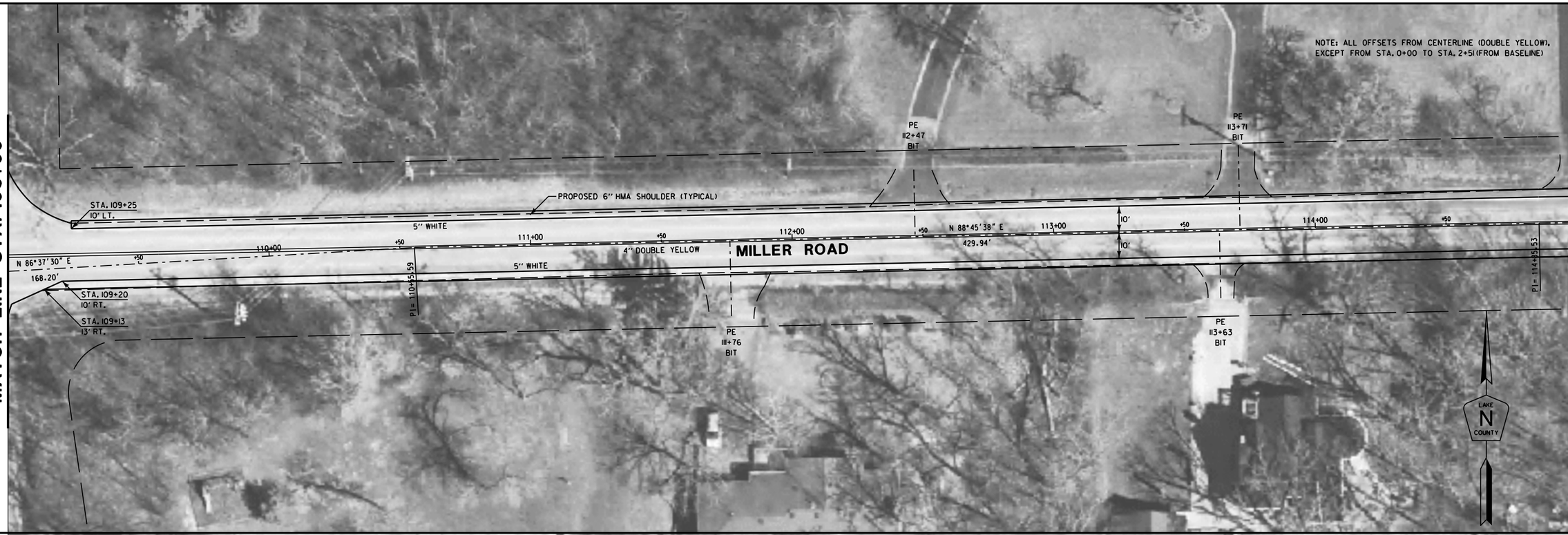

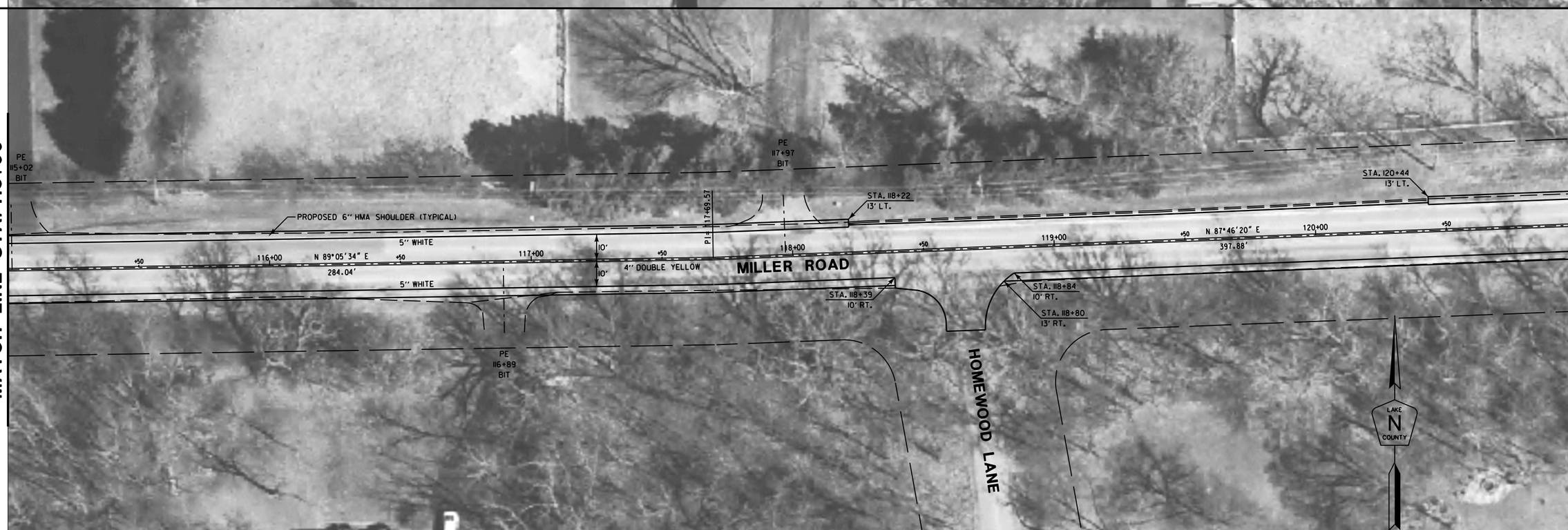

REVISIONS / REMARKS					
NO.	DESCRIPTION	DATE	BY	SURVEYOR:	/
		/ /		DSGNR/LIAISON:	
		/ /		PLOTTED BY:	HD18572 3/16/2016

VERT 5 0

SCALES
HORIZ.
0 20 40

MILLER ROAD RESURFACING

LakeCounty
Division of Transportation

PLAN SHEET
STATION 109+00 TO STATION 121+00

ROUTE	SECTION	SECTION NUMBER	SHEET	SHEETS
CH2	118	14-00118-11-RS	29	79

FILE NAME: U:\Design\Ruiz\14-00118-11-RS Miller Road Resurfacing\Plans\14-00118-11-RS plan sheet 9.dgn

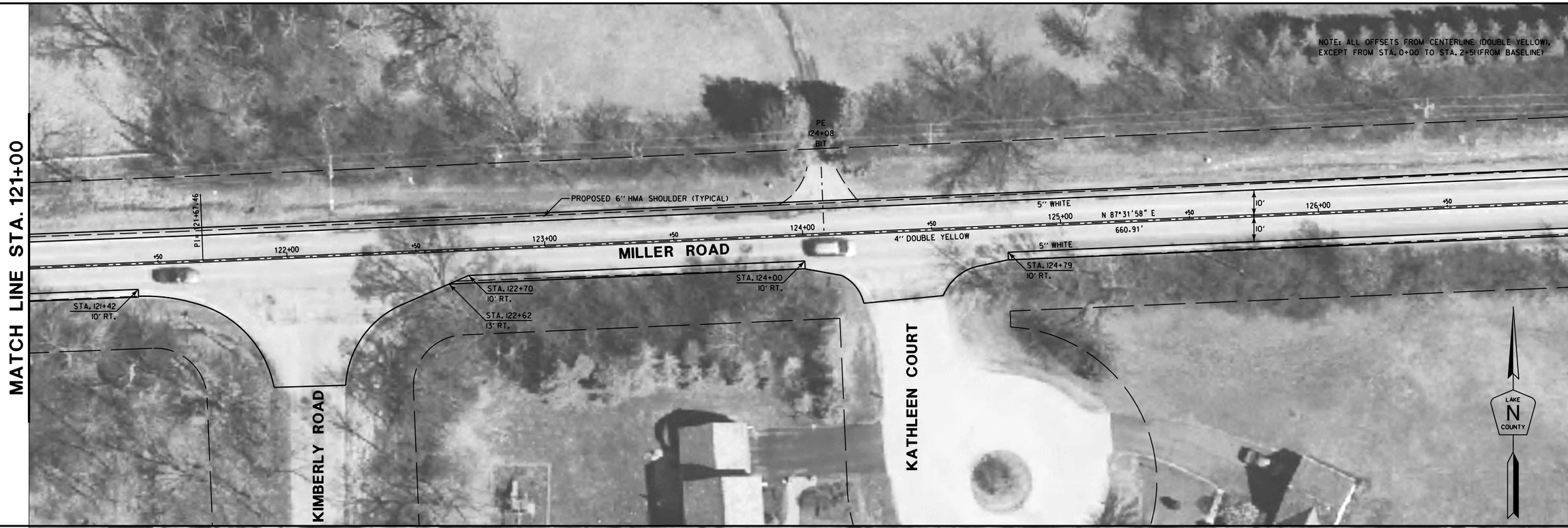

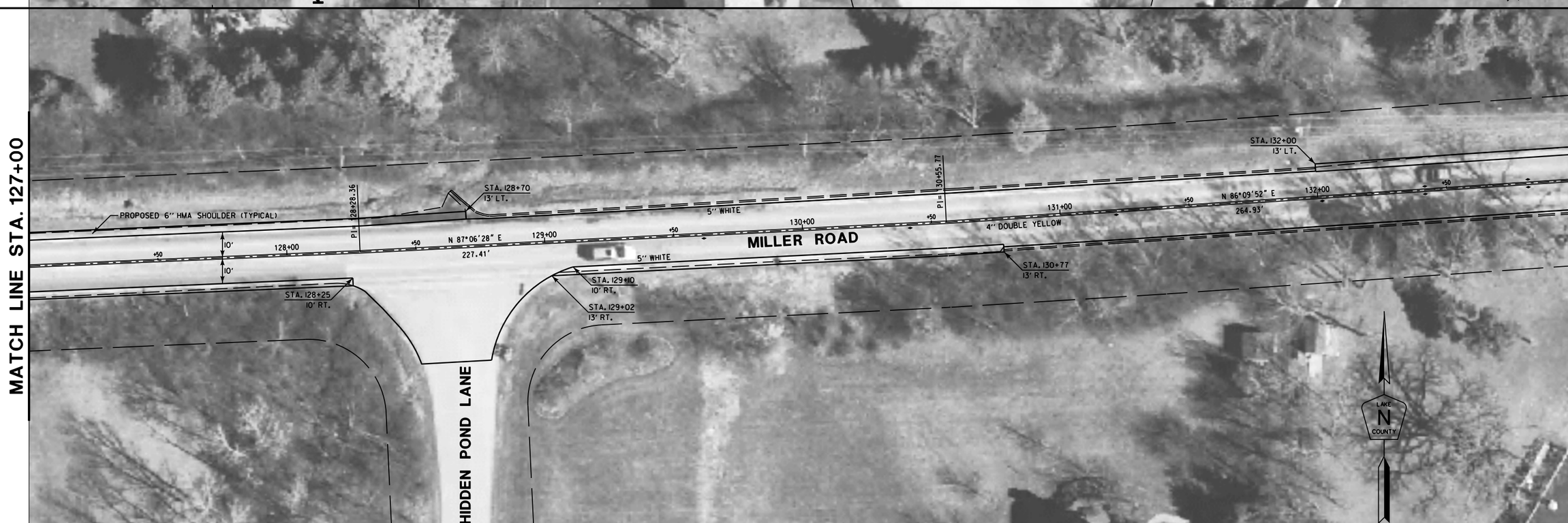

REVISIONS / REMARKS					
NO.	DESCRIPTION	DATE	BY	SURVEYOR:	/
		/ /		DSGNR/LIAISON:	
		/ /		PLOTTED BY:	HDI8572 3/16/2016

VERT 5 0

SCALES HORIZ. 0 20 40

MILLER ROAD RESURFACING

LakeCounty Division of Transportation

PLAN SHEET

STATION 121+00 TO STATION 133+00

ROUTE	SECTION	SECTION NUMBER	SHEET	SHEETS
CH2	118	14-00118-11-RS	30	79

FILE NAME: U:\Design\Ruiz\14-00118-11-RS Miller Road Resurfacing\Plans\14-00118-11-RS plan sheet 10.dgn

REVISIONS / REMARKS					
NO.	DESCRIPTION	DATE	BY	SURVEYOR:	/
		/ /		DSGNR/LIAISON:	
		/ /		PLOTTED BY:	HDI8572 3/16/2016

SCALES
VERT. 5 0
HORIZ. 0 20 40

MILLER ROAD RESURFACING

LakeCounty
Division of Transportation

PLAN SHEET
STATION 133+00 TO STATION 145+00

ROUTE	SECTION	SECTION NUMBER	SHEET	SHEETS
CH2	118	14-00118-11-RS	31	79

FILE NAME: U:\Design\Ruiz\14-00118-11-RS Miller Road Resurfacing\Plans\14-00118-11-RS plan sheet 11.dgn

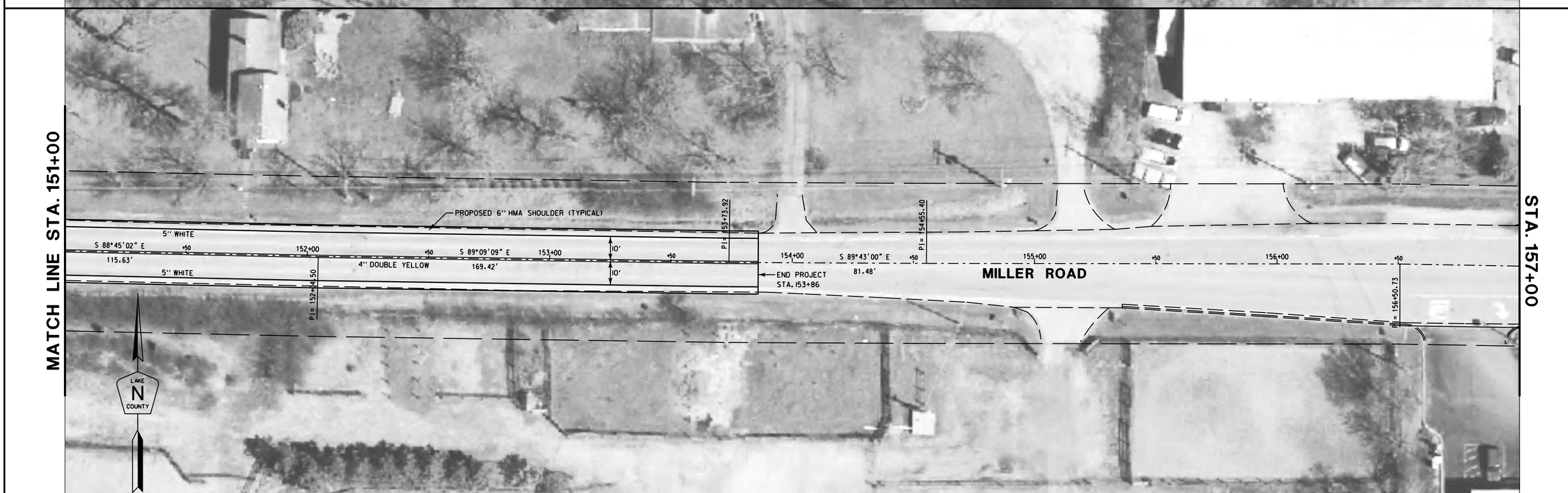

REVISIONS / REMARKS					
NO.	DESCRIPTION	DATE	BY	SURVEYOR:	/
		/ /		DSGNR/LIAISON:	
		/ /		PLOTTED BY:	HDI8572 3/16/2016

VERT 5 0 — SCALES HORIZ. 0 20 40

MILLER ROAD RESURFACING

LakeCounty Division of Transportation

PLAN SHEET

STATION 145+00 TO STATION 157+00

ROUTE	SECTION	SECTION NUMBER	SHEET	SHEETS
CH2	118	14-00118-11-RS	32	79

FILE NAME: U:\Design\Ruiz\14-00118-11-RS Miller Road Resurfacing\Plans\14-00118-11-RS plan sheet 12.dgn

MILLER ROAD
TRAFFIC CONTROL PLAN

TRAFFIC CONTROL AND PROTECTION GENERAL NOTES
(LCDOT – 2/4/2015 revision)

1. APPLICABLE STANDARDS

   IDOT Standards: 701001-02, 701006-05, 701011-04, 701311-03, 701501-06, 701901-05

   LCDOT Standards: LC7000, LC7004, LC7200

2. No work shall begin until the Traffic Control measures are in place. The Contractor shall at all times provide traffic protection by the application of traffic control devices according to the "Standard Specifications" and as shown on the plans.

3. The permanent traffic control shown on the plans is the minimum requirement. Additional traffic control devices as specified by the above Highway Standards and the Special Provisions shall be placed by the Contractor to the satisfaction of the Engineer. All traffic control devices shall be considered included in the lump sum pay item TRAFFIC CONTROL AND PROTECTION (SPECIAL) unless otherwise shown on the plans or in the special provisions.

4. All traffic control warning signs and associated signing mounted with the warning signs shall have black legends and borders on fluorescent orange reflective sheeting.

5. All construction signs, barricades and other devices required to control traffic shall be furnished, installed and maintained by the Contractor.

   - The Contractor shall furnish and install two weighted sand bags on each Type II barricade.

6. All traffic control devices shall be removed, covered or turned away from traffic immediately when they are no longer necessary. When a sign is covered, its post shall have a reflective 3 inch x 6 inch delineator installed.

7. The sign spacing for the above Highway Standards shall be according to the Sign Spacing Table shown on this Traffic Control Plan.

8. Road name plates shall be installed on the "ROAD WORK AHEAD" signs at the intersections shown on this Traffic Control Plan. The road name plates shall be 9 inch blanks with 6 inch uppercase and 5 inch lowercase lettering. The road name plates shall be furnished by the Contractor.

9. "ROAD WORK AHEAD" signs shall be equipped with mono-directional Type A amber flashing lights.

10. When milled pavement is open to traffic the grade difference between adjacent lanes shall be limited to a maximum of 1.5 inches. The grade difference may be increased to a maximum of 3 inches with the following

    - A 3:1 or flatter slope is provided between lanes.
    - Written approval from the Engineer.

SIGN NO.:		SIGN TYPE:
1		W20-1 (O)-48
2		W17-I 100 (O)-9xVARIABLE
3		M6-1L (O)-2115
4		M6-1R (O)-2115
5	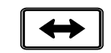	M6-4 (O)-2115

POSTED SPEED LIMIT:	
MILLER ROAD	35 MPH
KELSEY ROAD	45 MPH
ILLINOIS 59	50 MPH
OXFORD ROAD	25 MPH
GLEN CIRCLE	25 MPH
BILTMORE DRIVE	25 MPH
RUSTIC DRIVE	25 MPH
HOMEWOOD LANE	25 MPH
KIMBERLY ROAD	25 MPH
CLOVER HILL LANE	25 MPH
US 12	50 MPH

TRAFFIC CONTROL SIGN SPACING:	
55 MPH	500'
45-50 MPH	350'
<45 MPH	200'

REVISIONS / REMARKS					
NO.	DESCRIPTION	DATE	BY	SURVEYOR:	/
		/ /		DSGNR/LIAISON:	
		/ /		PLOTTED BY:	HDI8572 3/16/2016

MILLER ROAD RESURFACING

LakeCounty Division of Transportation

TRAFFIC CONTROL PLAN

ROUTE	SECTION	SECTION NUMBER	SHEET	SHEETS
CH2	118	14-00118-11-RS	33	79

FILE NAME: U:\Design\Ruiz\14-00118-11-RS Miller Road Resurfacing\Plans\14-00118-11-RS traffic controlnotes.dgn

REVISIONS / REMARKS					
NO.	DESCRIPTION	DATE	BY	SURVEYOR:	/
		/ /		DSGNR/LIAISON:	
		/ /		PLOTTED BY:	HDI8572 3/16/2016

VERT 5 0

SCALES
HORIZ.
0 100 200

MILLER ROAD RESURFACING

LakeCounty
Division of Transportation

TRAFFIC CONTROL PLAN

ROUTE	SECTION	SECTION NUMBER	SHEET	SHEETS
CH2	118	14-00118-11-RS	34	79

FILE NAME: U:\Design\Ruiz\14-00118-11-RS Miller Road Resurfacing\Plans\14-00118-11-RS traffic controlsheet 1.dgn

REVISIONS / REMARKS					
NO.	DESCRIPTION	DATE	BY	SURVEYOR:	/
		/ /		DSGNR/LIAISON:	
		/ /		PLOTTED BY:	HDI8572 3/16/2016

SCALES
VERT. 5 0
HORIZ. 0 100 200

MILLER ROAD RESURFACING

LakeCounty
Division of Transportation

TRAFFIC CONTROL PLAN

ROUTE	SECTION	SECTION NUMBER	SHEET	SHEETS
CH2	118	14-00118-11-RS	35	79

FILE NAME: U:\Design\Ruiz\14-00118-11-RS Miller Road Resurfacing\Plans\14-00118-11-RS traffic control sheet 2.dgn

REVISIONS / REMARKS					
NO.	DESCRIPTION	DATE	BY	SURVEYOR:	/
		/ /		DSGNR/LIAISON:	
		/ /		PLOTTED BY:	HDI8572 3/16/2016

SCALES
VERT. 5 0
HORIZ. 0 100 200

MILLER ROAD RESURFACING

LakeCounty
Division of Transportation

TRAFFIC CONTROL PLAN

ROUTE	SECTION	SECTION NUMBER	SHEET	SHEETS
CH2	118	14-00118-11-RS	36	79

FILE NAME: U:\Design\Ruiz\14-00118-11-RS Miller Road Resurfacing\Plans\14-00118-11-RS traffic controlsheet 3.dgn

REVISIONS / REMARKS					
NO.	DESCRIPTION	DATE	BY	SURVEYOR:	/
		/ /		DSGNR/LIAISON:	
		/ /		PLOTTED BY:	HDIB572 3/16/2016

SCALES
VERT. 0 5
HORIZ. 0 100 200

MILLER ROAD RESURFACING

LakeCounty
Division of Transportation

TRAFFIC CONTROL PLAN

ROUTE	SECTION	SECTION NUMBER	SHEET	SHEETS
CH2	118	14-00118-11-RS	37	79

FILE NAME: U:\Design\Ruiz\14-00118-11-RS Miller Road Resurfacing\Plans\14-00118-11-RS traffic controlsheet 4.dgn

REVISIONS / REMARKS					
NO.	DESCRIPTION	DATE	BY	SURVEYOR:	/
		/ /		DSGNR/LIAISON:	
		/ /		PLOTTED BY:	HDI8572 3/16/2016

VERT 5 0

SCALES
HORIZ.
0 100 200

MILLER ROAD RESURFACING

LakeCounty
Division of Transportation

TRAFFIC CONTROL PLAN

ROUTE	SECTION	SECTION NUMBER	SHEET	SHEETS
CH2	118	14-00118-11-RS	38	79

FILE NAME: U:\Design\Ruiz\14-00118-11-RS Miller Road Resurfacing\Plans\14-00118-11-RS traffic controlsheet 5.dgn

FAS	SECTION	COUNTY	TOTAL SHTS.	SHEET NO.
1017	*	LAKE	5	2
STA.		TO STA.		
FED. ROAD DIST. NO. 7	ILLINOIS	FED. AID PROJECT		

* 107TS-(079)
P-91-215-79

TRAFFIC SIGNAL LEGEND

- CONTROLLER
- SERVICE INSTALLATION
- SIGNAL HEAD OPTICALLY PROGRAMMED
- SIGNAL HEAD
- EMERGENCY VEHICLE SYSTEM DETECTOR, OPTICAL TYPE
- SIGNAL HEAD, PEDESTRIAN
- SIGNAL POST
- MAST ARM ASSEMBLY AND POLE, ALUMINUM
- MAST ARM ASSEMBLY AND POLE, STEEL
- HANDHOLE
- HEAVY DUTY HANDHOLE
- DOUBLE HANDHOLE
- G. S. CONDUIT IN TRENCH OR PUSHED
- RACEWAY FOR MAGNETIC DETECTOR, TYPE I OR TYPE II
- VEHICLE DETECTOR, NON-COMPENSATED MAGNETIC TYPE
- PEDESTRIAN PUSHBUTTON DETECTOR
- CONDUIT SPLICE
- JUNCTION BOX
- WOOD POLE
- SIGNAL FACE WITH BACKPLATE
- COMMON TRENCH

GENERAL NOTES

1. ALL DETECTOR LOOPS SHALL CONSIST OF THE NUMBER OF TURNS AS RECOMMENDED BY THE MANUFACTURER. DETECTOR LOOPS AND LEAD-IN WIRING SHALL BE INSTALLED IN STRICT CONFORMITY WITH THE MANUFACTURERS RECOMMENDATIONS.
2. THE 2/C NO. 12 SHIELDED CABLE TO BE USED FOR THE DETECTOR LOOP LEAD-IN SHALL BE MEASURED FROM THE SPLICE TO THE CONTROLLER AS SPECIFIED IN SECTION T 421.04 OF THE STANDARD SPECIFICATIONS FOR TRAFFIC CONTROL ITEMS EXCEPT NO SLACK SHALL BE ALLOWED. THE DETECTOR LOOP SHALL BE MEASURED FOR THAT PORTION OF SAW CUT BEYOND THE SPLICE AS SPECIFIED IN SECTION T 418.04 OF THE SPECIFICATIONS FOR TRAFFIC CONTROL ITEMS. FLAT CABLE WILL NOT BE PERMITTED.
3. ELECTRIC CABLE THAT IS FURNISHED BY THE CONTRACTOR SHALL BE PROTECTED BY POLYETHYLENE INSULATION WITH A POLYVINYCHLORIDE JACKET, UNLESS OTHERWISE SPECIFIED.
4. THE REMOVAL AND REPLACEMENT OF SIDEWALK, DRIVEWAY, MEDIAN AND ISLAND SURFACE PAVING AT HANDHOLES, JACKING PITS, INSPECTION OPENINGS AND CONCRETE JUNCTION BOXES SHALL BE INCIDENTAL TO THE CONTRACT AND NO SEPARATE PAYMENT WILL BE MADE. REPLACEMENT SHALL BE MADE WITH A LIKE MATERIAL OF LIKE THICKNESS TO THE EXISTING SURFACE.
5. THE EXACT LOCATION OF ALL UTILITIES SHALL BE FIELD VERIFIED BY THE CONTRACTOR BEFORE THE INSTALLATION OF ANY COMPONENTS OF THE TRAFFIC SIGNAL SYSTEM.
6. ALL SIGNAL POST AND MAST ARM POLES SHALL BE LOCATED WITH THEIR CENTERLINES A MINIMUM OF FOUR (4) AND SIX (6) FEET RESPECTIVELY FROM THE BACK OF CURB UNLESS NOTED OR DIMENSIONED TO THE CONTRARY ON THE DRAWINGS.

   IN NON-CURBED AREAS THE MAST ARM POLE SHALL BE LOCATED A MINIMUM OF TEN (10) FEET BEHIND THE EDGE OF PAVEMENT OR TWO (2) FEET BEHIND THE EDGE OF SHOULDER, WHICHEVER DISTANCE IS GREATER. SIGNAL POSTS SHOULD BE PLACED AT A MINIMUM OF TWO (2) FEET BEHIND THE EDGE OF THE SHOULDER.

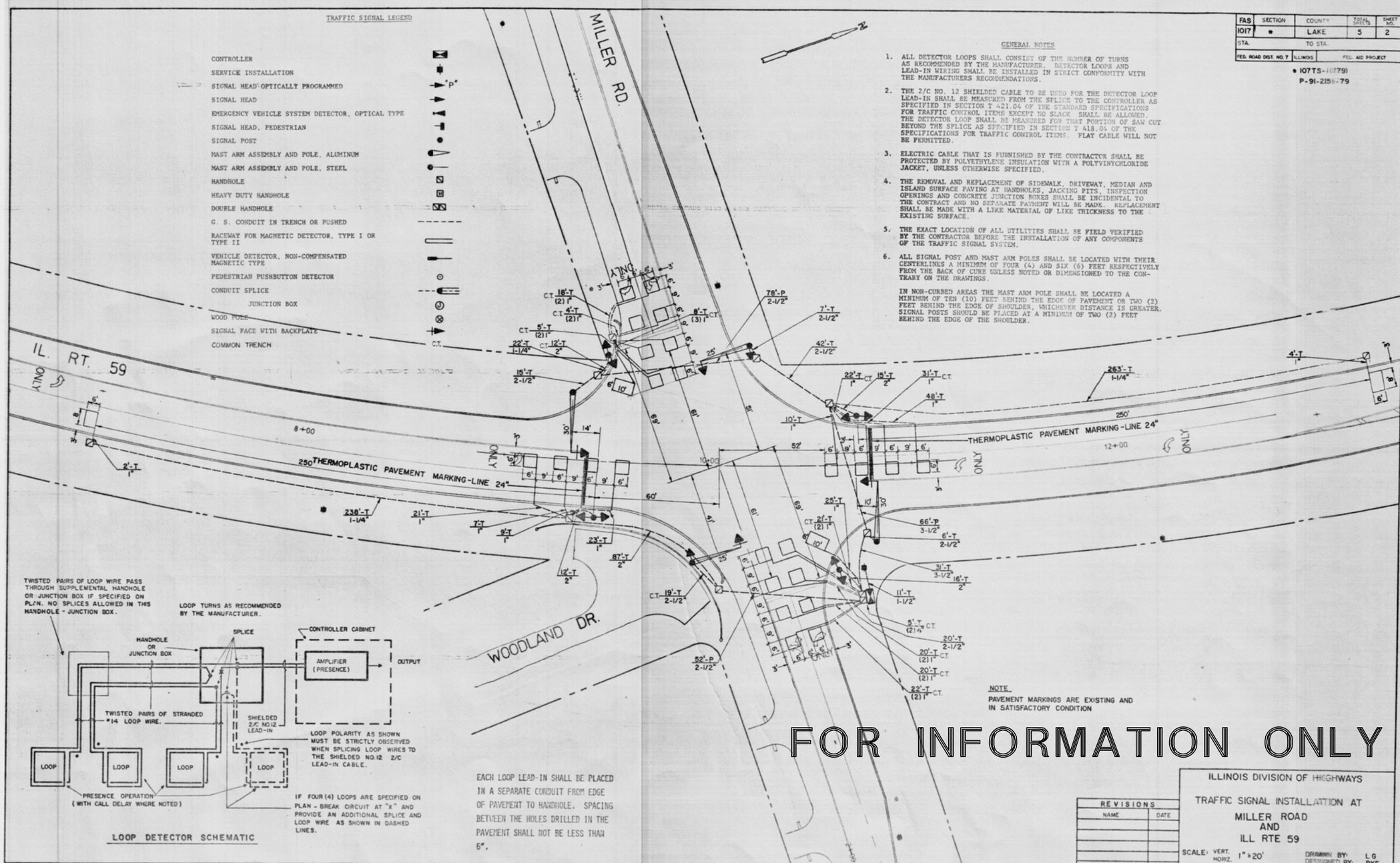

REVISIONS	
NAME	DATE

ILLINOIS DIVISION OF HIGHWAYS

TRAFFIC SIGNAL INSTALLATION AT
MILLER ROAD
AND
ILL RTE 59

SCALE: VERT. HORIZ. 1" = 20'
DATE 9-21-79

DRAWN BY: LG
DESIGNED BY: RKF
CHECKED BY: TSK

REVISIONS / REMARKS					
NO.	DESCRIPTION	DATE	BY	SURVEYOR:	/
		/ /		DSGNR/LIAISON:	
		/ /		PLOTTED BY:	HDI8572 3/16/2016

MILLER ROAD RESURFACING

LakeCounty Division of Transportation

TRAFFIC SIGNAL PLAN

ROUTE	SECTION	SECTION NUMBER	SHEET	SHEETS
CH2	118	14-00118-11-RS	39	79

FILE NAME: U:\Design\Ruiz\14-00118-11-RS Miller Road Resurfacing\Plans\14-00118-11-RS traffic signalplan.dgn

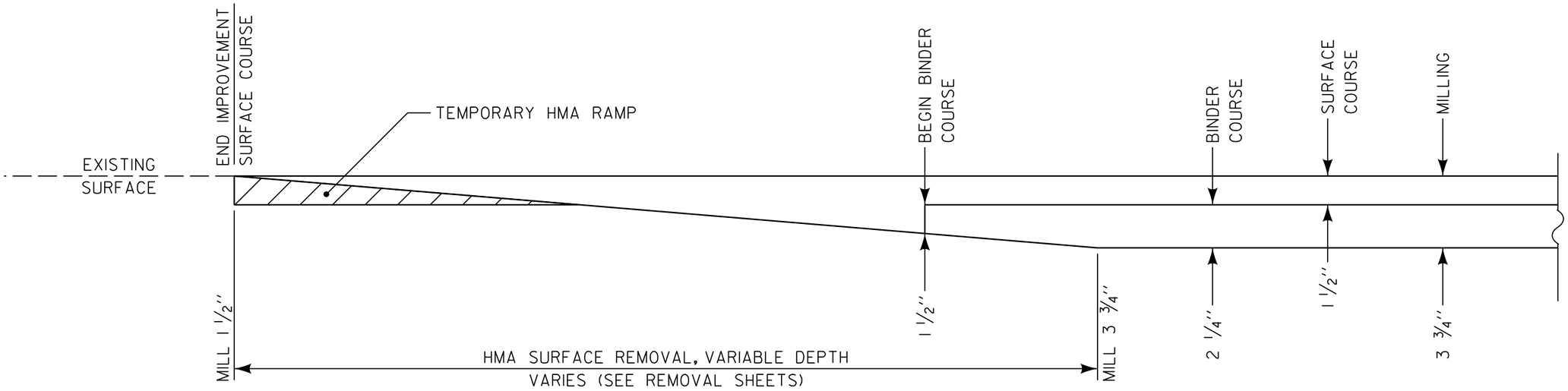

BUTT JOINT DETAIL

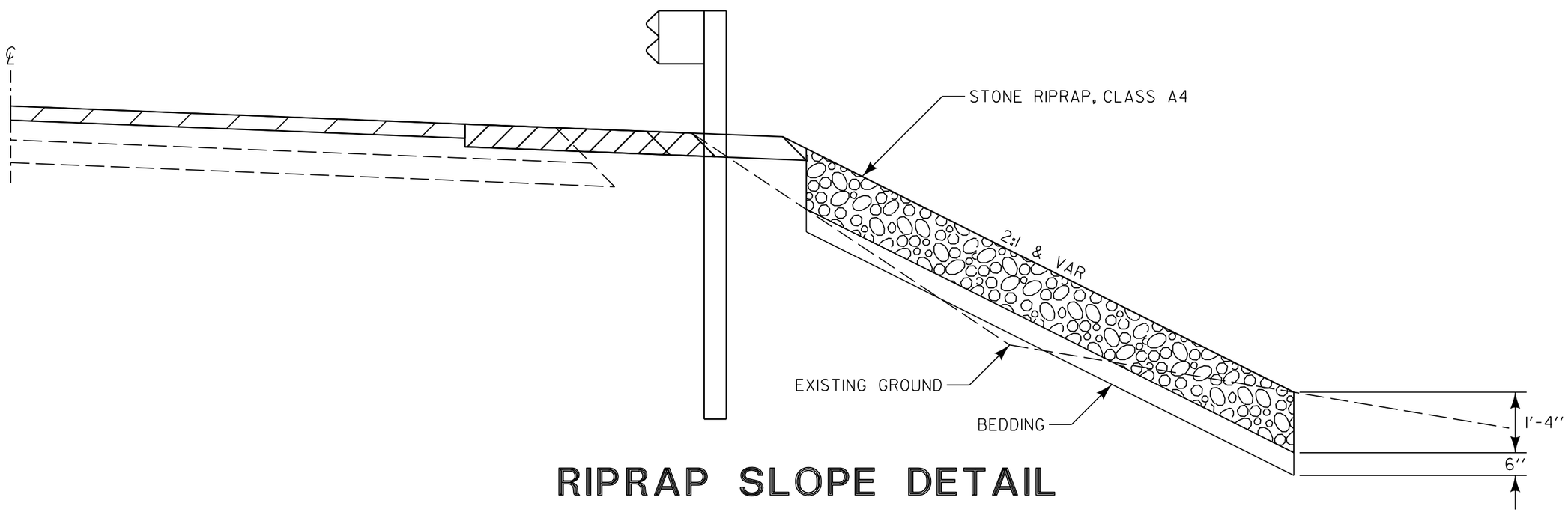

RIPRAP SLOPE DETAIL

REVISIONS / REMARKS					
NO.	DESCRIPTION	DATE	BY	SURVEYOR:	/
		/ /		DSGNR/LIAISON:	
		/ /		PLOTTED BY:	HD18572 3/16/2016

LakeCounty
Division of Transportation

MILLER ROAD RESURFACING

DETAIL SHEET

ROUTE	SECTION	SECTION NUMBER	SHEET	SHEETS
CH2	118	14-00118-11-RS	40	79

FILE NAME: U:\Design\Ruiz\14-00118-11-RS Miller Road Resurfacing\Plans\14-00118-11-RS details.dgn

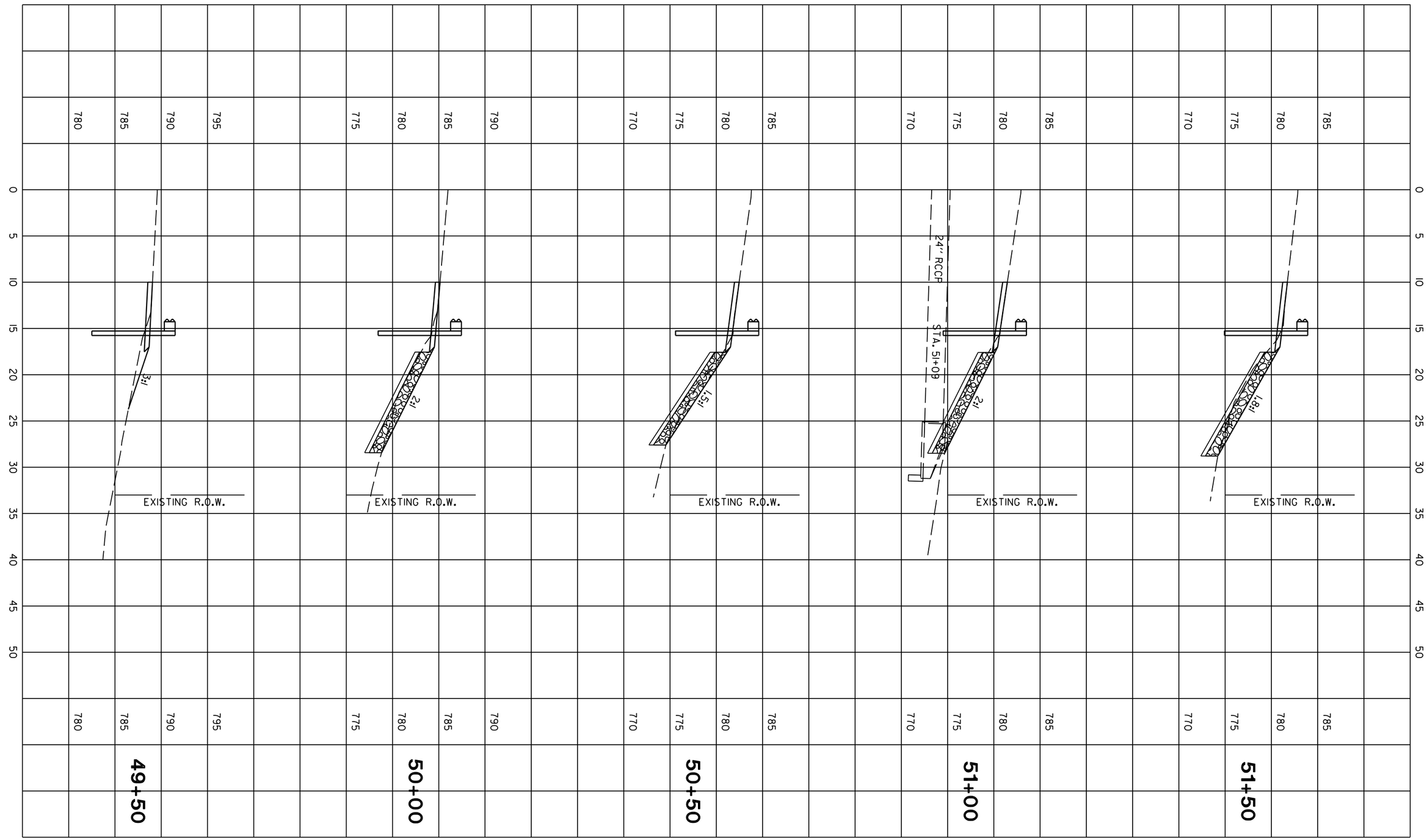

REVISIONS / REMARKS					
NO.	DESCRIPTION	DATE	BY	SURVEYOR:	/
		/ /		DSGNR/LIAISON:	
		/ /		PLOTTED BY:	HD18572 3/16/2016

LakeCounty
Division of Transportation

MILLER ROAD RESURFACING

CROSS SECTION STA. 49+50 TO STA. 51+50

ROUTE	SECTION	SECTION NUMBER	SHEET	SHEETS
CH2	118	14-00118-11-RS	41	79

FILE NAME: U:\Design\Ruiz\14-00118-11-RS Miller Road Resurfacing\Plans\14-00118-11-RS cross section sheet.dgn

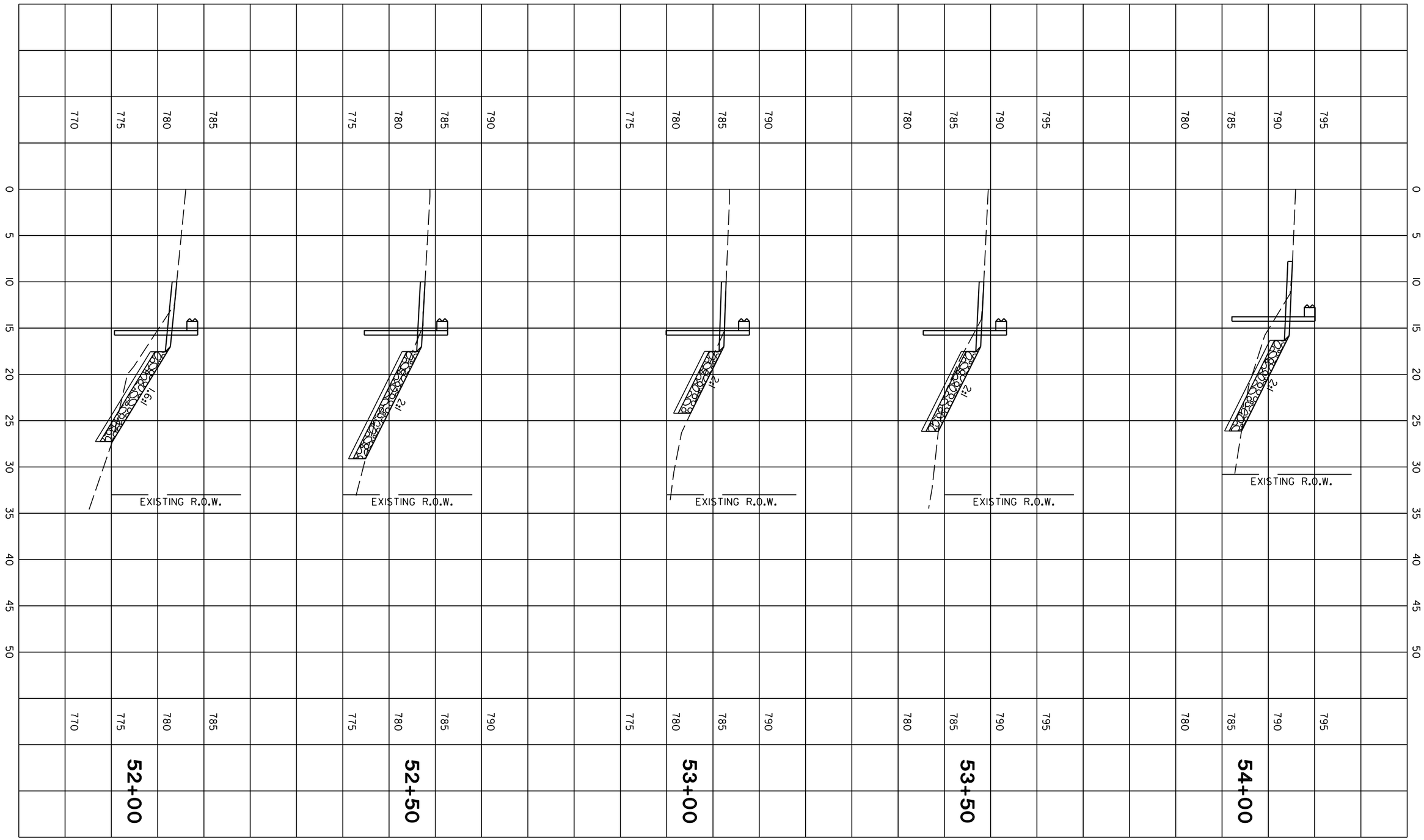

REVISIONS / REMARKS					
NO.	DESCRIPTION	DATE	BY	SURVEYOR:	/
		/ /		DSGNR/LIAISON:	
		/ /		PLOTTED BY:	HD18572 3/16/2016

LakeCounty
Division of Transportation

MILLER ROAD RESURFACING

CROSS SECTION STA. 52+00 TO STA. 54+00

ROUTE	SECTION	SECTION NUMBER	SHEET	SHEETS
CH2	118	14-00118-11-RS	42	79

FILE NAME: U:\Design\Ruiz\14-00118-11-RS Miller Road Resurfacing\Plans\14-00118-11-RS cross section sheet.dgn

1. SET POSTS AND EXCAVATE OR SLIT-TRENCH A 6-INCH DEEP TRENCH UPSLOPE ALONG THE LINE OF POSTS

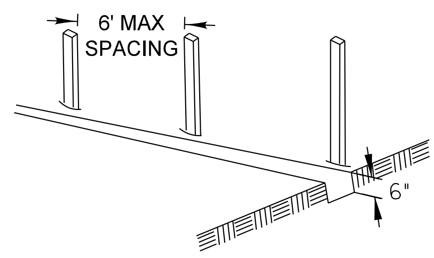

2. ATTACH GEOTEXTILE FILTER FABRIC TO EACH POST WITH A MINIMUM OF 3 (THREE) FASTENERS PER POST AND EXTEND FABRIC TO THE BOTTOM OF THE TRENCH

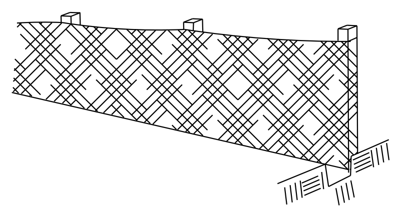

3. BACKFILL AND COMPACT THE EXCAVATED MATERIALS

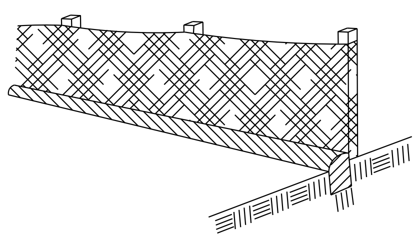

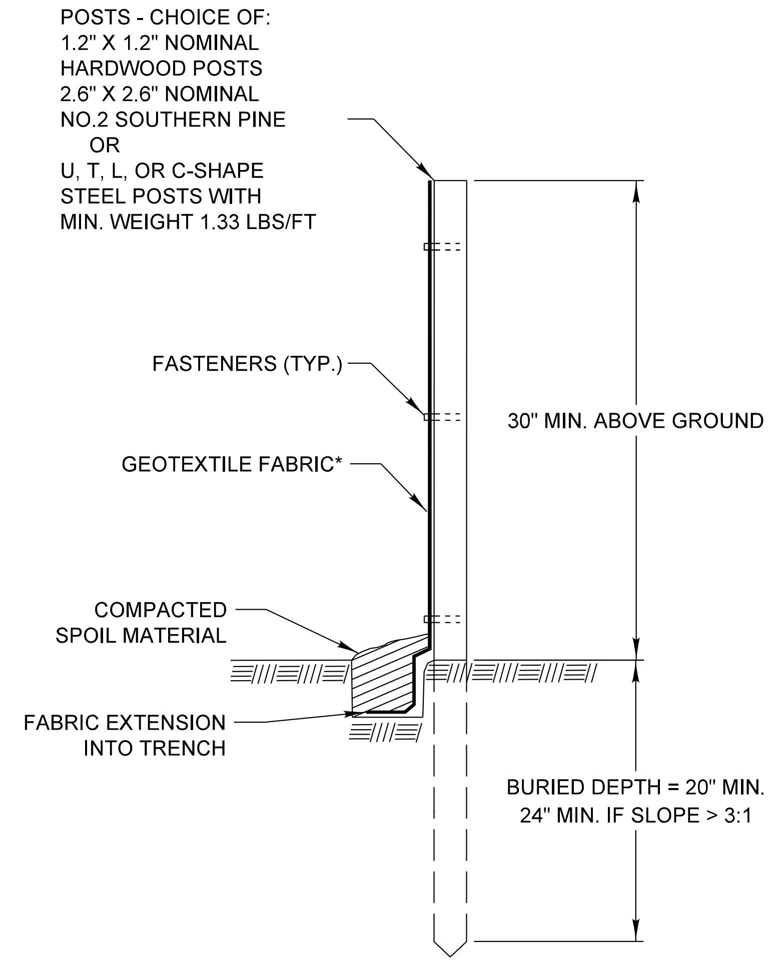

* NOTE: OPTIONAL WIRE SUPPORT
- MIN. 30" HEIGHT
- MIN. 14 GAUGE WIRE
- MIN. 6 HORIZ. WIRES
- MIN. 6" VERTICAL SPACING

SCALE 1" = 1'

Requirements	Test Methods	Wire Backed Supported Silt Fence [a]	Unsupported Silt Fence: Geotextile Elongation >=50% [b]	Unsupported Silt Fence: Geotextile Elongation <50% [b]
Maximum Post Spacing		4 feet	4 feet	6 feet
Grab Strength	ASTM D 4632			
Machine direction		90 lbs	124 lbs	124 lbs
X-Machine direction		90 lbs	100 lbs	100lbs
Permittivity [c]	ASTM D 4491	0.05 sec^{-1}	0.05 sec^{-1}	0.05 sec^{-1}
Apparent Opening Size	ASTM D 4751	0.024in maximum average roll value		
Ultraviolet stability (retained strength)	ASTM D 4355	70% after 500 hours of exposure		

REVISIONS	DATE
ORIG. by LCSMC	4/21/08
Update Text	7/15/11

LakeCounty Division of Transportation

APPROVED BY: M. G. ZEMAITIS
DATE: JUNE 20, 2008

PERIMETER EROSION BARRIER INSTALLATION

LC2051

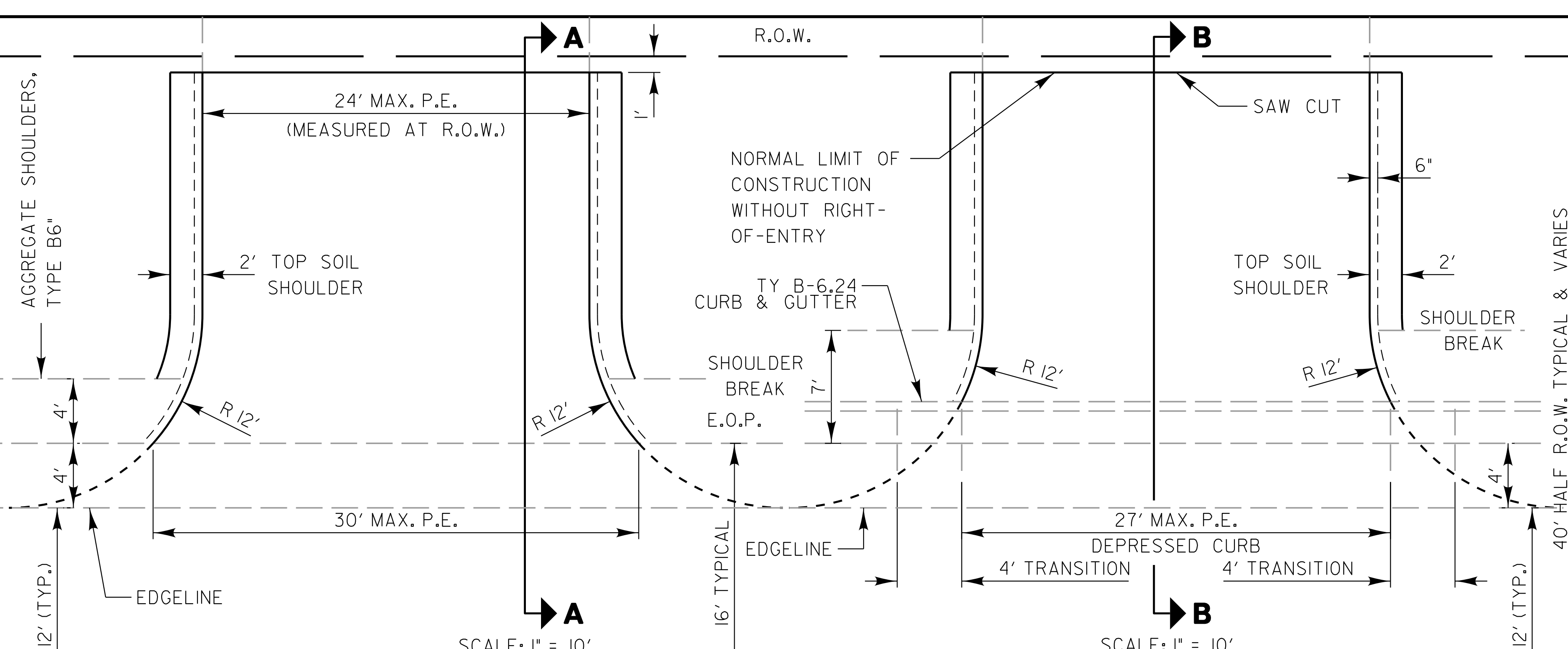

AGGREGATE SHOULDER

CURB & GUTTER

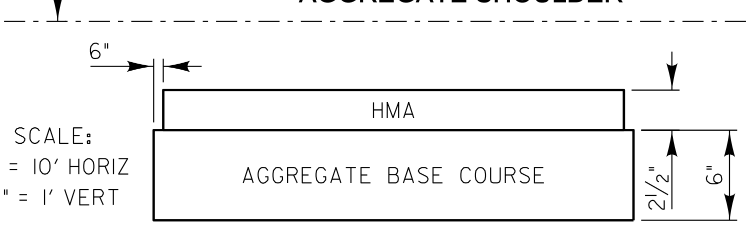

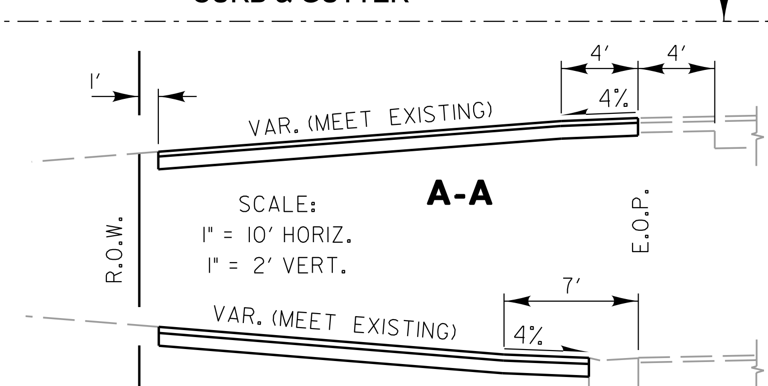

PEs: 2 1/2 " HOT-MIX ASPHALT SURFACE COURSE on 6" AGGREGATE BASE COURSE, TYPE B

Calculated Quantities for PRIVATE ENTRANCE w/o Curb and Gutter:
1. HMA Surface Course Weight Used = 112 lbs/Sq Yd/Inch thickness
   Area = 63.0 Sq Yd
   63.0 Sq Yd X 112 lb/Sq Yd/Inch x 2.5 Inches = **9 Ton**
2. Aggregate Base Course Weight Used = 2 Ton/Cu Yd
   65.7 Sq Yd x 2 Ton/Cu Yd x 6 Inch thickness = **22 Ton**

Calculated Quantities for PRIVATE ENTRANCE with Curb and Gutter:
1. HMA Surface Course Weight Used = 112 lbs/Sq Yd/Inch thickness
   Area = 55.0 Sq Yd
   55.0 Sq Yd X 112 lb/Sq Yd/Inch x 2.5 Inches = **8 Ton**
2. Aggregate Base Course Weight Used = 2 Ton/Cu Yd
   57.2 Sq Yd x 2 Ton/Cu Yd x 6 Inch thickness = **19 Ton**

REVISIONS	DATE
Removed Prime Coat Qty	5/20/08
Revised Ent. EOP Radius	6/4/10
Revised Type A to Type B Aggregate	12/20/12
Revised Curb Transition	1/7/15

LakeCounty Division of Transportation

APPROVED BY: M. G. ZEMAITIS
DATE: APRIL 1, 2007

TYPICAL MINOR ACCESS (PRIVATE ENTRANCE)

LC4100

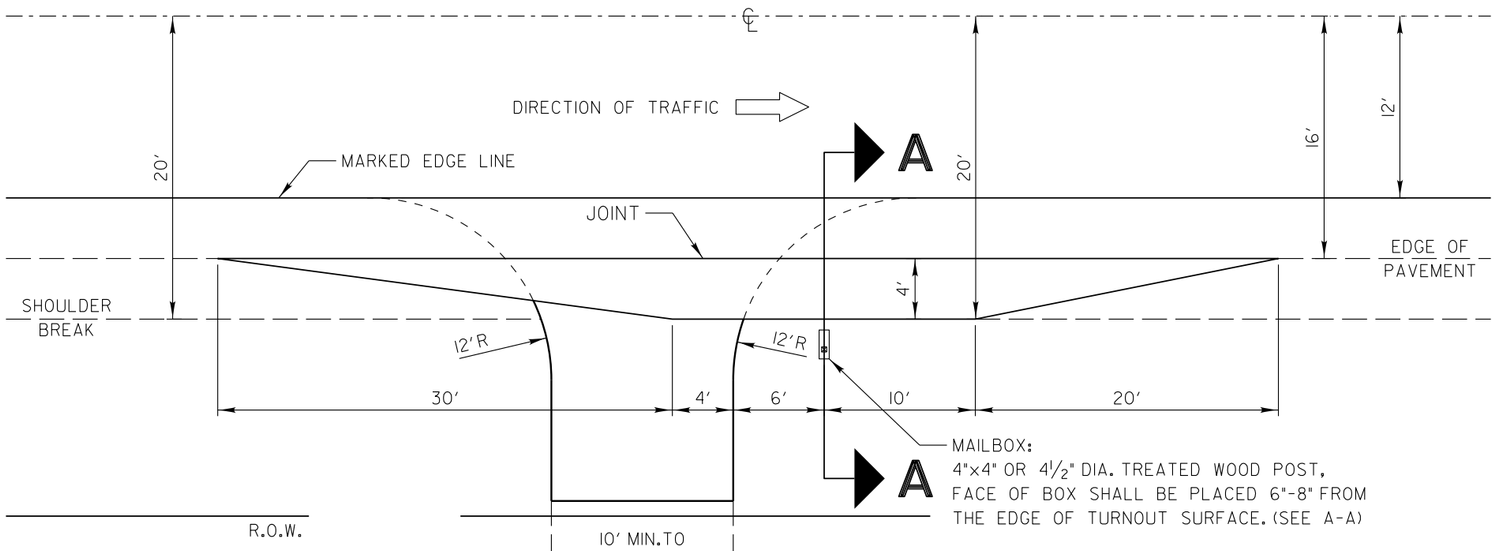

SCALE: 1" = 10'

DESIGN NOTES:

1. The Resident Engineer shall contact the local postmaster prior to installing the new mailbox posts for the local mounting height of the mailbox. The standard mounting height is 3½'; however, local post- masters may vary this height.
2. The standard mailbox post is a 4"x4" or a 4½" dia. treated wood post. The standard bury length of the post is 2'. Do not shorten or exceed this bury length.
3. Depending on the location of the shoulder break with respect to the edge of the mailbox turnout the overall post length may vary from 5' 8" to 6' 4" to maintain the 2' bury length and the 3½' mounting height.

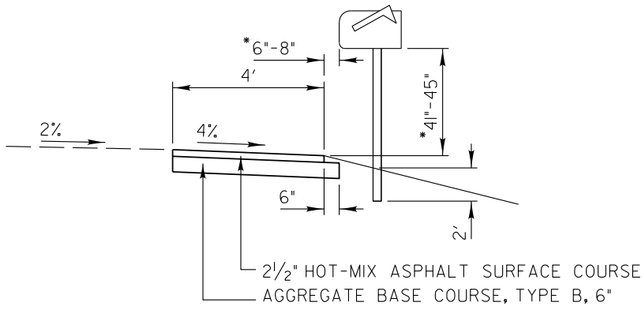

SECTION A-A

SCALE: 1" = 5'

* USPS RESIDENTIAL MAILBOX STANDARD

REVISIONS	DATE
4' PAVED SHOULDER ADDED	9/21/10
6"-8" BOX OFFSET ADDED	12/22/11
Revised Type A to Type B Aggregate	12/20/12

LakeCounty Division of Transportation

APPROVED BY: M. G. ZEMAITIS
DATE: APRIL 1, 2007

MAILBOX TURNOUT ALONG UNCURBED ROADS

LC4120

HOT-MIX ASPHALT PAVEMENT FOR MIDWEST GUARDRAIL SYSTEM WITH COMBINATION CURB & GUTTER

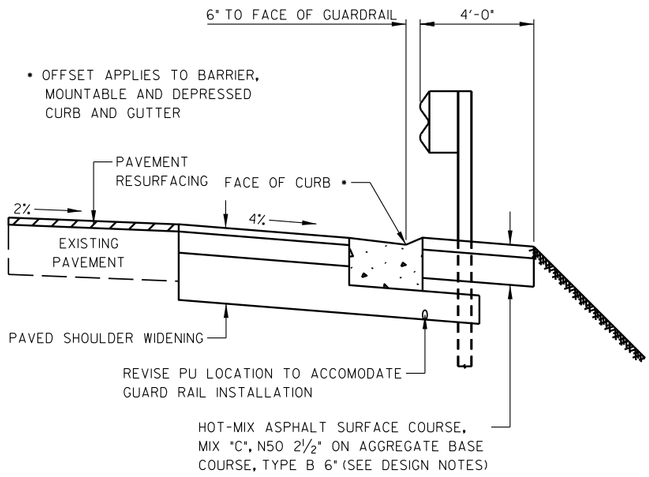

HOT-MIX ASPHALT PAVEMENT FOR MIDWEST GUARDRAIL SYSTEM

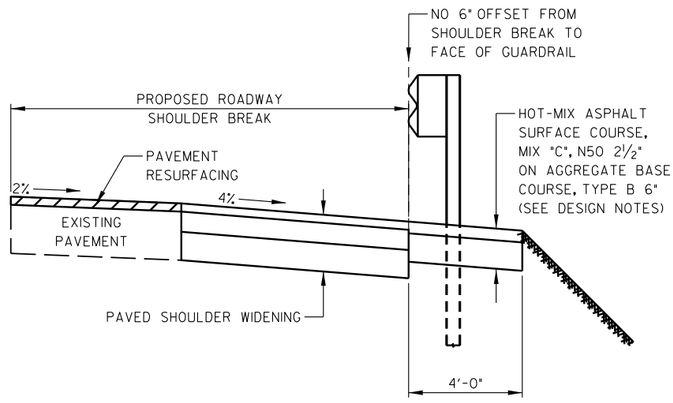

FOR NEW CONSTRUCTION / RECONSTRUCTION PROJECTS THE PAVED SHOULDER WIDENING WILL CHANGE TO FULL DEPTH PAVEMENT.

DESIGN NOTES:

THIS DETAIL SUPPLEMENTS IDOT STANDARD 630301-06 ADDING HMA SURFACE COURSE AND AGGREGATE BASE COURSE UNDER THE GUARDRAIL AND TRAFFIC BARRIER TERMINALS.

IF THE HMA PAVEMENT UNDER THE GUARDRAIL AND TRAFFIC BARRIER TERMINAL IS BEING CONSTRUCTED IN CONJUNCTION WITH A ROAD IMPROVEMENT, THE HOT-MIX ASPHALT SURFACE COURSE SHALL BE THE SAME AS THAT USED ON THE ROADWAY.

REVISIONS	DATE

LakeCounty Division of Transportation

APPROVED BY: MGZ
DATE: 04/01/2013

HMA PAVEMENT UNDER GUARDRAIL AND TRAFFIC BARRIER TERMINALS

LC6304

NO.	REVISIONS / REMARKS DESCRIPTION	DATE	BY	SURVEYOR: DSGNR/LIAISON: PLOTTED BY:	MD8572 3/16/2006	/

FILE NAME: U:\Design\Rur2\14-00118-11-RS Miller Road Resurfacing\Plans\14-00118-11-RS lcdot standards.dgn

LakeCounty Division of Transportation

MILLER ROAD RESURFACING
LAKE COUNTY STANDARDS & DETAILS

ROUTE	SECTION	SECTION NUMBER	SHEET	SHEETS
CH2	118	14-00118-11-RS	44	79

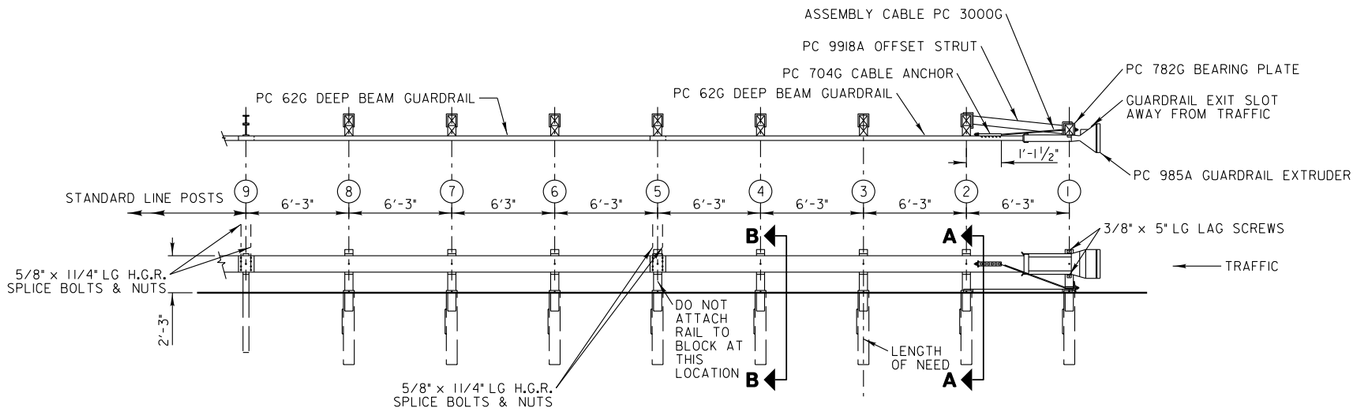

SCALE: 1"= 6'

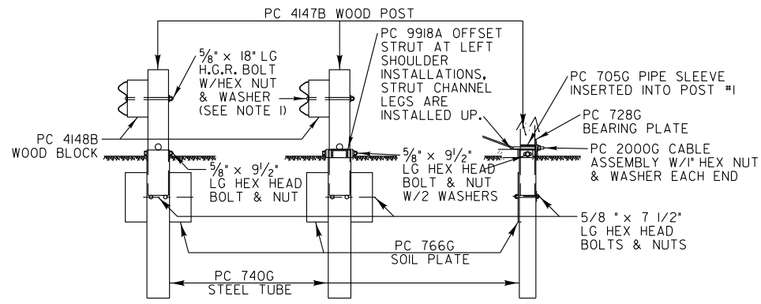

SECTION "B-B" (TYP @ POSTS #3, 4, 6, 7 & 8)

SECTION "A-A" (@ POST #2)

PARTIAL VIEW (@ POST #1)

SCALE: 1' = 3'

NOTE:
SECTION "B-B" IS SIMILAR @ POST #5 EXCEPT RAIL IS NOT ATTACHED.

BILL OF MATERIAL		
PC	QTY	DESCRIPTION
60G	1	DEEP BEAM GUARD RAIL (12GA)
62G	1	DEEP BEAM GUARD RAIL (12GA)
705G	1	PIPE SLEEVE
766G	8	SOIL PLATE
4148B	7	WOOD BLOCK
4147B	8	WOOD POST
740G	8	STEEL TUBE
782G	1	BEARING PLATE
704A	1	CABLE ANCHOR
3000G	1	CABLE ASSEMBLY
9918G	1	OFFSET STRUT
985A	1	GUARDRAIL EXTRUDER
		——HARDWARE——
3497G	8	5/8"⌀ x 9 1/2" HEX HD BOLT
3580G	7	5/8"⌀ x 18" H.G.R. POST BOLT
3360G	16	5/8"⌀ x 1 1/4" H.G.R. SPLICE BOLT
3478G	16	5/8"⌀ x 7 1/2" HEX HD BOLT
3340G	47	5/8" H.G.R. NUT
3300G	11	5/8" WASHER
3264G	2	3/8"⌀ x 5" LAG SCREW
3910G	2	1" HEX NUT
3900G	2	1" WASHER

NOTES:

1. THE 5/8" FLAT WASHER IS USED UNDER THE NUT, BEHIND THE POST ONLY. NO WASHER IS USED ATTHE RAIL
2. THE BREAKAWAY POSTS @ LOCATIONS #5, 6, 7 & 8 MAY BE AS SHOWN OR MAY UTILIZE POSTS AS SHOWN IN OPTION "B" WITHOUT FOUNDATION TUBES. (SEE DRAWING NO SS 241.) POSTS @ LOCATIONS #1, 2, 3 & 4 MUST USE FOUNDATION TUBES.
3. THE ER-2000 WAS TESTED ON FLAT & LEVEL TERRAIN. IT IS NOT RECOMMENDED ON SLOPES.
4. MANUFACTURER SUGGESTS CUSTOMER TO PROVIDE REFLECTORIZATION OF TERMINAL.

NO.	REMARKS	DATE	BY
	REVISIONS		

ET-2000
PLAN, ELEVATION & SECTIONS
OPTION "A"
1994 EDITION
SYRO, INC.
A Subsidiary of Trinity Industries, Inc.
GRAND RAPIDS — CENTERVILLE, UTAH
SS 240

REVISIONS	DATE

LakeCounty Division of Transportation

APPROVED BY: A. KHAWAJA
DATE: APRIL 1, 2007

TRAFFIC BARRIER TERMINAL, TYPE 1 SPECIAL (TANGENT)

LC6310

TYPICAL APPLICATION OF TRAFFIC CONTROL DEVICES for HIGHWAY CONSTRUCTION, CONTRACT MAINTENANCE and UTILITY OPERATIONS

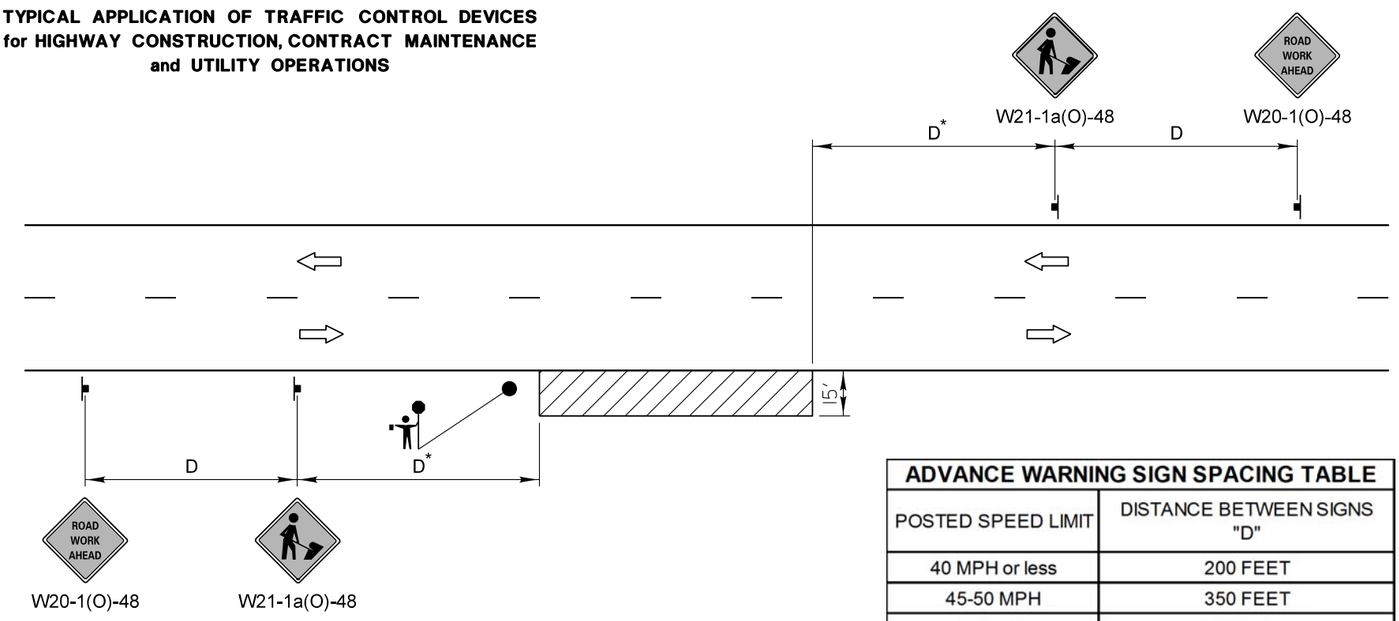

ADVANCE WARNING SIGN SPACING TABLE	
POSTED SPEED LIMIT	DISTANCE BETWEEN SIGNS "D"
40 MPH or less	200 FEET
45-50 MPH	350 FEET
55 MPH	500 FEET

GENERAL NOTES:

This special detail is used at any time, any vehicle, equipment, workers or their activities require a stationary, intermittent or continuous moving operation within 15 feet of the traffic lane, where the average speed is 1 mph or less.

* Minimum distance "D" is shown in the Advance Warning Sign Spacing Table. If the work is a moving operation, the maximum distance "D" may be extended to ½ the length required for one normal working day's operation or 4 miles, whichever is less.

If the work operation does not exceed 60 minutes, traffic control may be according to I.D.O.T. Highway Standard 701301.

SYMBOLS

WORK AREA

SIGN ON PORTABLE OR PERMANENT SUPPORT

FLAGGER WITH TRAFFIC CONTROL SIGN WHEN REQUIRED

MODIFIED IDOT STANDARD 701011-02

NOT TO SCALE

REVISIONS	DATE
Title Block Revision	8/1/09
Reformat LCDOT Standard	7/15/10

LakeCounty Division of Transportation

APPROVED BY: A. KHAWAJA
DATE: APRIL 1, 2007

TWO LANE, TWO WAY, OFF-ROAD OPERATIONS DAY OPERATIONS ONLY

LC7000

REVISIONS / REMARKS			
NO.	DESCRIPTION	DATE	BY
		/ /	

SURVEYOR: DSGNR/LIAISON: PLOTTED BY: ND8572 3/16/2006

FILE NAME: U:\Design\Rur2\14-00118-11-RS Miller Road Resurfacing\Plans\14-00118-11-RS lcdot standards.dgn

LakeCounty Division of Transportation

MILLER ROAD RESURFACING
LAKE COUNTY STANDARDS & DETAILS

ROUTE	SECTION	SECTION NUMBER	SHEET	SHEETS
CH2	118	14-00118-11-RS	45	79

TYPICAL APPLICATION OF TRAFFIC CONTROL DEVICES for HIGHWAY CONSTRUCTION, CONTRACT MAINTENANCE and UTILITY OPERATIONS

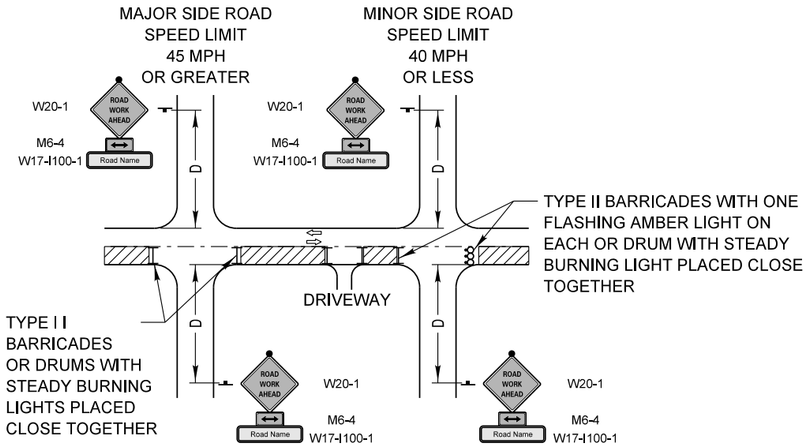

GENERAL NOTE:

This Standard is used where at any time, day or night, any vehicle, equipment, workers or their activities encroach on the pavement or where construction requires lane closures.

DESIGN NOTES:

1. For a side road with a speed limit of 40 mph or less, the closed portion of the main route shall be protected by blocking with Type II barricades or drums, 1/3 of the cross section of the closed portion of the roadway.
2. For a side road with a speed limit of 45 mph or greater, the closed portion of the main route shall be protected by blocking with Type II barricades or drums, 1/2 of the cross section of the closed portion of the roadway.
3. All W20-1 "ROAD WORK AHEAD" signs shall be 48"x48" with fluorescent orange reflective sheeting with an amber Type A flashing light mounted on the sign.
4. When the side road lies between the beginning of the mainline signing and the work zone, a M6-1 Single Headed Arrow shall be used in lieu of the M6-4 Double Headed Arrow.
5. For a lane closure on a side road, use the applicable portions of the appropriate Highway Standard or Traffic Control Detail. The spacing of the signs and barricades or drums shall be adjusted for field conditions as directed by the engineer. The directional arrow shall be covered or removed when no longer consistent with the side road closure.
6. Advance warning signs shall be omitted on driveways unless otherwise noted.
7. The traffic control and protection for side roads and intersections shall be included in the contract lump sum price for "TRAFFIC CONTROL AND PROTECTION, SPECIAL."

SYMBOLS

- WORK AREA
- SIGN ON PORTABLE OR PERMANENT SUPPORT
- TYPE II BARRICADE W/TYPE A FLASHING LIGHT
- DRUM WITH STEADY BURNING LIGHT

ADVANCE WARNING SIGN SPACING TABLE	
POSTED SPEED LIMIT	DISTANCE BETWEEN SIGNS "D"
40 MPH or less	200 FEET
45-50 MPH	350 FEET
55 MPH	500 FEET

NOT TO SCALE

MODIFIED IDOT DISTRICT ONE SIDE ROAD DETAIL

REVISIONS	DATE
Title Block Revision	8/1/09
Reformat LCDOT Standard	7/15/10
Use of Drums in lieu Type III Barricade	4/22/14

LakeCounty Division of Transportation

APPROVED BY: ANTHONY KHAWAJA
DATE: APRIL 1, 2007

TRAFFIC CONTROL and PROTECTION for SIDEROADS, INTERSECTIONS and DRIVEWAYS

LC7004

DIRECTION INDICATOR BARRICADES

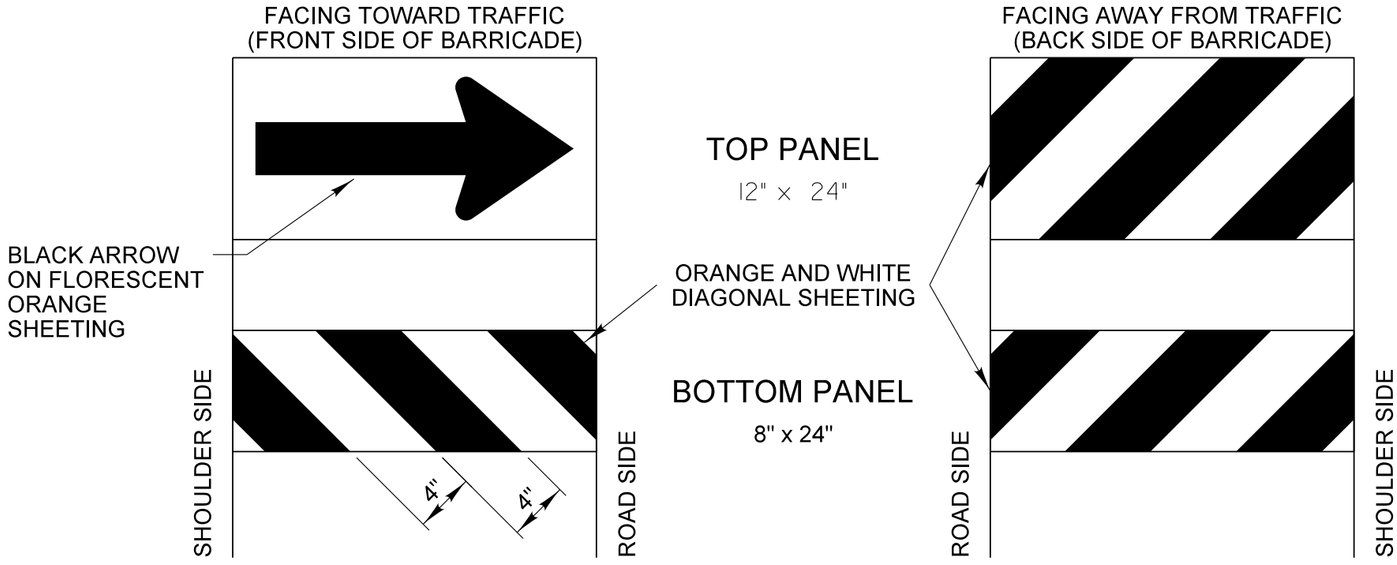

GENERAL NOTES

1) Direction Indicator Barricades shall be constructed from non-metallic Type II barricades meeting the requirements of Article 1106.02 of the Standard Specifications, except where modified by this detail.
2) The Direction Indicator Barricades shall be equipped with Type C steady burning lights if used to channelize traffic during the hours of darkness.
3) The reflective sheeting for the top panel shall be Type AZ fluorescent orange. The diagonal panels shall have orange and white Type A or better reflective sheeting.

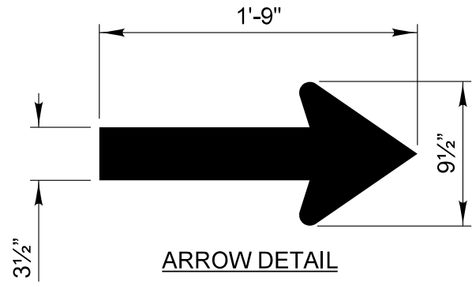

ARROW DETAIL

REVISIONS	DATE
Text Update	7/15/11

LakeCounty Division of Transportation

APPROVED BY: ANTHONY KHAWAJA
DATE: APRIL 1, 2007

TYPICAL APPLICATION OF TRAFFIC CONTROL DEVICES HIGHWAY CONSTRUCTION, CONTRACT MAINTENANCE

DIRECTION INDICATOR BARRICADES

LC7200

NO.	REVISIONS / REMARKS DESCRIPTION	DATE	BY
		/ /	

SURVEYOR: DSGNR/LIAISON: PLOTTED BY: MD8572 3/16/2006

FILE NAME: U:\Design\Rural\14-00118-11-RS Miller Road Resurfacing\Plans\14-00118-11-RS lcdot standards.dgn

LakeCounty Division of Transportation

MILLER ROAD RESURFACING
LAKE COUNTY STANDARDS & DETAILS

ROUTE	SECTION	SECTION NUMBER	SHEET	SHEETS
CH2	118	14-00118-11-RS	46	79

TYPICAL PAVEMENT MARKINGS

TYPICAL MINI-SKIP PAVEMENT MARKINGS

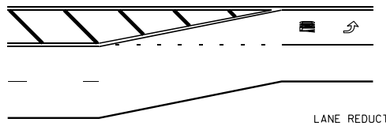

LANE REDUCTION

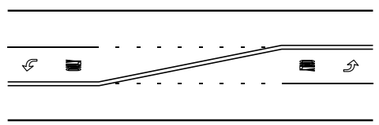

DOUBLE TAPER

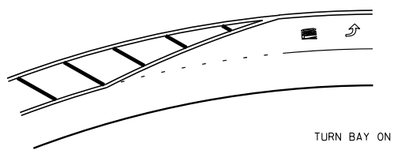

TURN BAY ON CURVE

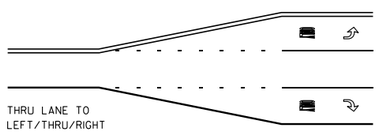

THRU LANE TO
LEFT/THRU/RIGHT

MINI-SKIPS ARE 2 FEET WHITE LINE WITH 6 FEET SPACING. THE MINI-SKIP IS THE SAME WIDTH AS THE PAVEMENT MARKING LINE. IT EXTENDS.

EDGE LINE RADII AT SIDE STREETS

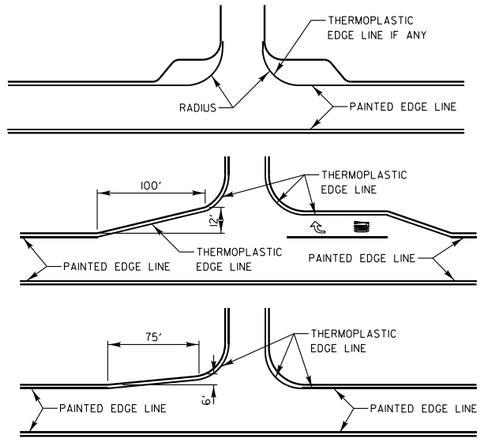

LANE REDUCTION ARROW PLACEMENT

REFERENCE:
1. MANUAL ON UNIFORM TRAFFIC CONTROL DEVICES, 2009 EDITION (USDOT-FHWA), TABLE 2C-4, CONDITION "A".

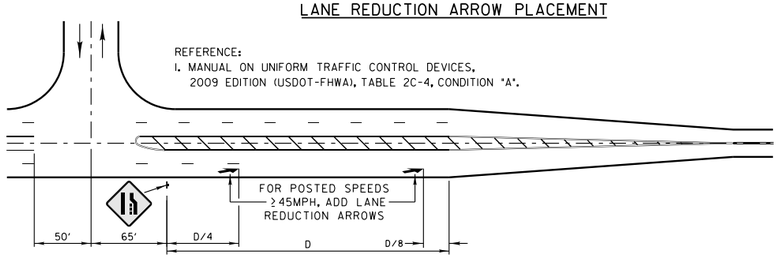

DESIGN SPEED MPH	D (FEET)
<45	N/A
45	775' (1)
50	885' (1)
55	990' (1)

TYPCIAL TURN BAY PAVEMENT MARKINGS

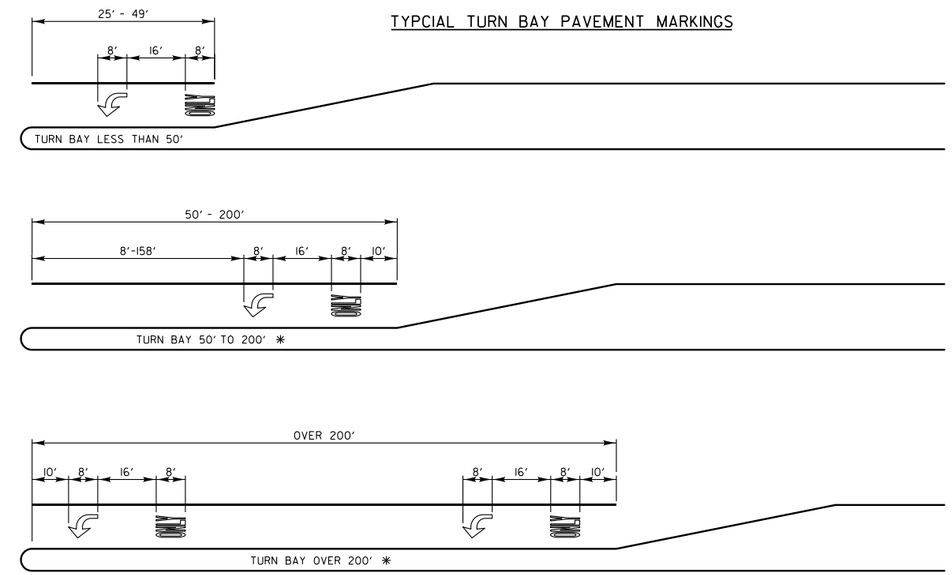

✳ AT INTERSECTIONS WITH VIDEO DETECTION, THE ARROW AND ONLY PAVEMENT MARKINGS SHALL BE A MINIMUM OF 30' BEHIND THE STOP BAR.

AREA = 15.6 SQ. FT.

ONLY AREA = 20.8 SQ FT.

FULL SIZE LETTERS (8') AND ARROWS SHALL BE USED. TURN LANES IN EXCESS OF 400' IN LENGTH MAY HAVE AN ADDITIONAL SET OF ARROW W/ "ONLY" INSTALLED MIDWAY BETWEEN THE OTHER TWO SETS OF ARROW W/ "ONLY".

TWO LANE ROAD

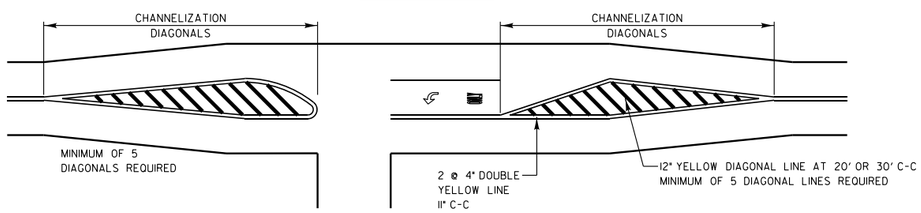

TWO-WAY LEFT TO LEFT TURN BAY

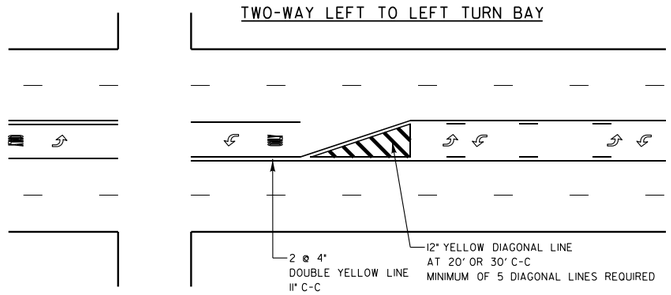

TYPICAL DIAGONAL SPACING

DIAGONAL SPACING

SPEED LIMIT RANGE	CONTINUOUS	INTERSECTION CHANNELIZATION
30-45 MPH	75 FT.	20 FT.
OVER 45 MPH	150 FT.	30 FT.

DUAL LEFT TURN ARROWS

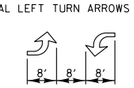

31.2 SQ. FT. MINIMUM
OF 2 SETS REQUIRED

A MINIMUM OF TWO PAIRS OF DUAL LEFT TURN ARROWS SHALL BE USED. THE DUAL LEFT TURN ARROWS SHALL BE WHITE IN COLOR. THE INTERVAL BETWEEN SETS OF DUAL LEFT TURN ARROWS SHOULD BE 200' AND 300'.

3 OR 5 LANE ROAD

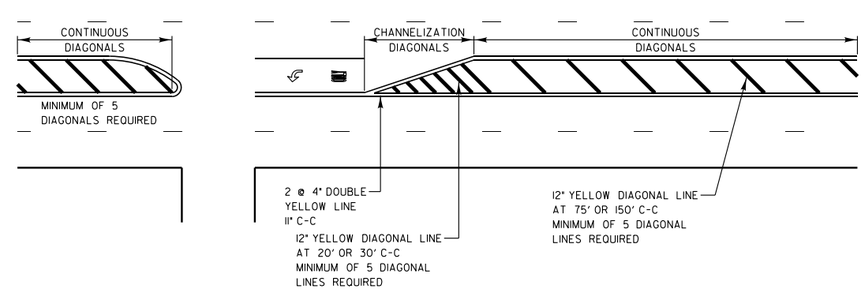

REVISIONS	DATE
SEPARATED RAILROAD SHEET	06/02/08
ADDED LANE REDUCTION ARROWS	07/1/12
RAISED TO RECESSED MARKERS	12/2/13
REMOVE STATION NUMBERS	5/30/14

LakeCounty
Division of Transportation

APPROVED BY: A. KHAWAJA
DATE: APRIL 1, 2007

TYPICAL PAVEMENT MARKINGS FOR COUNTY HIGHWAYS

SHEET 1 OF 2

LC7800

REVISIONS / REMARKS					
NO.	DESCRIPTION	DATE	BY	SURVEYOR:	/
		/ /		DSGNR/LIAISON:	
		/ /		PLOTTED BY:	HDI8572 3/16/2016

LakeCounty
Division of Transportation

MILLER ROAD RESURFACING

LAKE COUNTY STANDARDS & DETAILS

ROUTE	SECTION	SECTION NUMBER	SHEET	SHEETS
CH2	118	14-00118-11-RS	47	79

FILE NAME: U:\Design\Ruiz\14-00118-11-RS Miller Road Resurfacing\Plans\14-00118-11-RS lcdot standard 7800.dgn

TYPICAL PAVEMENT MARKINGS AND RECESSED PAVEMENT MARKERS

THRU LANE TO TURN LANE CONVERSION

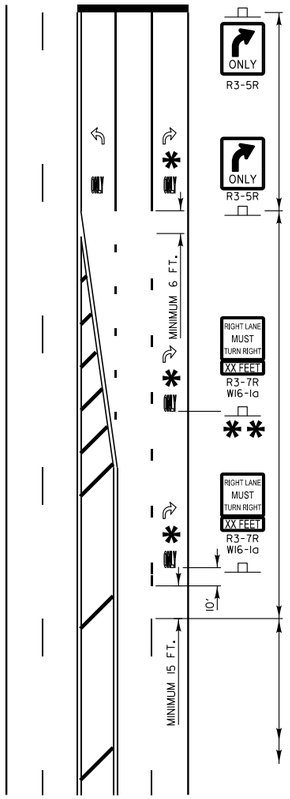

TURN LANE
6" WHITE LINE
(ADDITIONAL PAVEMENT MARKINGS AS SHOWN ON SHEET ONE OF THE L.C.D.O.T TYPICAL PAVEMENT MARKINGS DETAIL SHEETS)

TRANSITION ZONE
6" WHITE 3'/12' SKIP DASH LANE LINE

THRU LANE
4 " WHITE 10'/30' SKIP DASH LANE LINE

MINIMUM TRANSITION ZONE LENGTH

POSTED SPEED	LENGTH
25 M.P.H.	255 FT
30 M.P.H.	330 FT
35 M.P.H.	405 FT
40 M.P.H.	480 FT
45 M.P.H.	555 FT
50 M.P.H.	630 FT
55 M.P.H.	705 FT

* LOCATION OF PAV'T MARKINGS

(MEASURED FROM BEGINNING OF TRANSITION ZONE)

POSTED SPEED	LOCATION OF PAV'T MARKINGS
25 M.P.H.	10 FT, 260 FT
30 M.P.H.	10 FT, 170 FT, 340 FT
35 M.P.H.	10 FT, 210 FT, 410 FT
40 M.P.H.	10 FT, 170FT, 330 FT, 490 FT
45 M.P.H.	10 FT, 190 FT, 370 FT, 560 FT
50 M.P.H.	10 FT, 170 FT, 330 FT, 490 FT, 640 FT
55 M.P.H.	10 FT, 180 FT, 350 FT, 520 FT, 710 FT

** FOR POSTED SPEEDS 40 M.P.H. OR GREATER A SECOND R3-7/W16-1a SIGN INSTALLATION SHALL BE LOCATED HALFWAY BETWEEN THE BEGINNING OF THE TRANSITION ZONE AND THE BEGINNING OF THE TURN LANE

PAVEMENT MARKING GUIDELINES

TYPE OF MARKING	WIDTH OF LINE	PATTERN	COLOR	SPACING / REMARKS
CENTERLINE OF 2 LANE PAVEMENT	4 IN.	SKIP-DASH	YELLOW	10 FT. LINE WITH 30 FT. SPACE
NO PASSING ZONE LINES: FOR ONE DIRECTION FOR BOTH DIRECTIONS	4 IN. 2 @ 4 IN.	SOLID SOLID	YELLOW YELLOW	5 1/2 IN. C-C FROM SKIP-DASH CENTERLINE 11 IN. C-C (OMIT SKIP-DASH CENTERLINE BETWEEN)
CENTERLINE ON MULTI-LANE UNDIVIDED	2 @ 4 IN.	SOLID	YELLOW	11 IN. C-C
LANE LINES	4 IN.	SKIP-DASH	WHITE	10 FT. LINE WITH 30 FT. SPACE
DOTTED LINES (EXTENSIONS OF CENTER, LANE OR TURN LANE MARKINGS)	SAME AS LINE BEING EXTENDED	SKIP-DASH	SAME AS LINE BEING EXTENDED	2 FT. LINE WITH 6 FT. SPACE
EDGE LINES	5 IN. WHITE 4 IN. YELLOW	SOLID	WHITE - RIGHT YELLOW - LEFT	OUTLINE RAISED MEDIANS IN YELLOW
TURN LANE MARKINGS	6 IN. LINE FULL SIZE LETTERS AND SYMBOLS (8 FT.)	SOLID	WHITE	TURN ARROW 15.6 SQ. FT. STRAIGHT ARROW 11.5 SQ. FT. ONLY 20.8 SQ. FT. COMB. ARROW 26.0 SQ. FT.
TWO WAY LEFT TURN MARKING	2 @ 4 IN. EACH DIRECTION 8 FT. LEFT ARROW	SKIP-DASH AND SOLID IN PAIRS	YELLOW WHITE	10 FT. LINE WITH 30 FT. SPACE FOR SKIP-DASH 5 1/2 IN. C-C BETWEEN SKIP-DASH LINE AND SOLID LINE SEE TYPICAL TWO-WAY LEFT TURN MARKING DETAIL
CROSSWALK	12 IN. @ 90°	SOLID	WHITE	12 IN. LONGITUDINAL BAR WITH 24 IN. SPACE 6 FT. TO 12 FT. WIDE SEE TYPICAL CROSSWALK MARKING DETAIL
STOP BARS	24 IN.	SOLID	WHITE	PLACE 4 FT. IN ADVANCE OF AND PARALLEL TO CROSSWALK, IF PRESENT, OTHERWISE PLACE AT DESIRED STOPPING POINT.
PAINTED MEDIANS	2 @ 4 IN. & 11 IN. C-C 12 IN. DIAGONALS @ 45° NO DIAGONALS USED FOR 4 FT. WIDE MEDIAN	SOLID	YELLOW: 2-WAY TRAFFIC WHITE: 1-WAY TRAFFIC	11 IN. C-C FOR THE DOUBLE LINE SEE TYPICAL PAINTED MEDIAN MARKING DETAIL MINIMUM OF 5 DIAGONALS
GORE MARKING AND CHANNELIZING LINES	8 IN. WITH 12 IN. DIAGONALS @ 45°	SOLID	WHITE	DIAGONALS 15 FT. C-C (LESS THAN 30 M.P.H.) 20 FT. C-C (30 TO 45 M.P.H.) 30 FT. C-C (OVER 45 M.P.H.) MINIMUM OF 5 DIAGONALS
R.R. CROSSING	24 IN. TRANSVERSE LINES RR IS 6 FT. LETTER 16 IN. LINE FOR "X"	SOLID	WHITE	SEE I.D.O.T. STD. 78000I SQ. FT. AREA OF: "R" = 3.6 SQ. FT. / "R" "X" = 54.0 SQ. FT.
SHOULDER DIAGONALS (FOR PAVED SHOULDER ≥ 6 FT.)	12 IN. @ 45°	SOLID	WHITE - RIGHT YELLOW - LEFT	50 FT. C-C (LESS THAN 30 M.P.H.) 75 FT. C-C (30 TO 45 M.P.H.) 150 FT. C-C (OVER 45 M.P.H.) MINIMUM OF 5 DIAGONALS

FOR FURTHER DETAILS ON PAVEMENT MARKING REFER TO PART III "MARKINGS" IN THE "ILLINOIS MANUAL ON UNIFORM TRAFFIC CONTROL DEVICES", THE "STANDARD SPECIFICATIONS FOR ROAD AND BRIDGE CONSTRUCTION", AND THE LATEST I.D.O.T. HIGHWAY STANDARD 78000I.

TYPICAL RECESSED PAVEMENT MARKER INSTALLATION

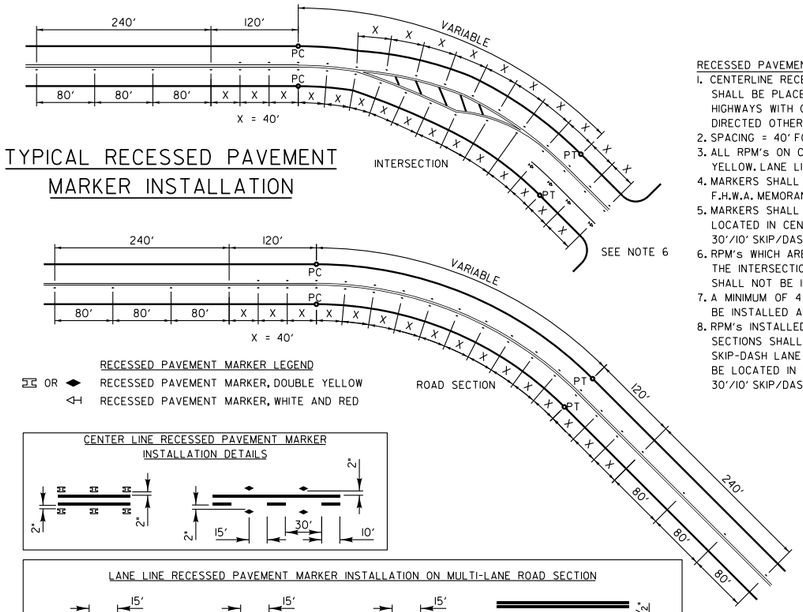

RECESSED PAVEMENT MARKER LEGEND

OR RECESSED PAVEMENT MARKER, DOUBLE YELLOW

RECESSED PAVEMENT MARKER, WHITE AND RED

CENTER LINE RECESSED PAVEMENT MARKER INSTALLATION DETAILS

LANE LINE RECESSED PAVEMENT MARKER INSTALLATION ON MULTI-LANE ROAD SECTION

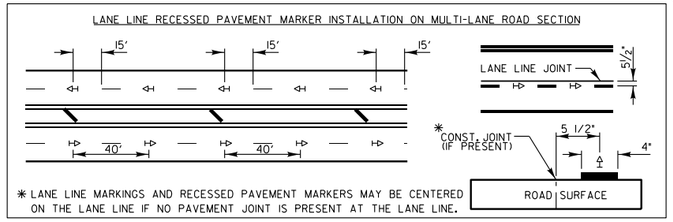

* LANE LINE MARKINGS AND RECESSED PAVEMENT MARKERS MAY BE CENTERED ON THE LANE LINE IF NO PAVEMENT JOINT IS PRESENT AT THE LANE LINE.

PAVEMENT CROSS SECTION SHOWING TYPICAL PAVEMENT MARKINGS

(2-LANE ROADWAY)

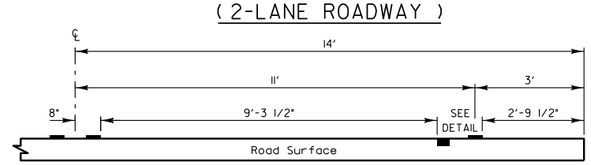

11' LANE WIDTH

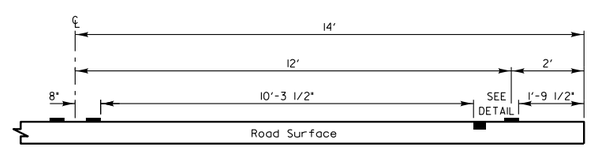

12' LANE WIDTH

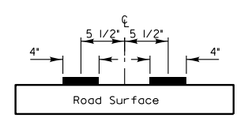

DOUBLE STRIPE CENTERLINE DETAIL

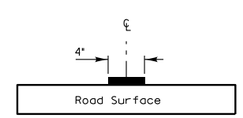

SINGLE STRIPE CENTERLINE DETAIL

NOTE:
CENTERLINE MARKINGS ARE 4" LINES AT 11" CENTERS.

RECESSED PAVEMENT MARKER NOTES:

1. CENTERLINE RECESSED PAVEMENT MARKERS (RPM's) SHALL BE PLACED ON ALL TWO AND THREE LANE HIGHWAYS WITH CURVES OVER 3 1/2 DEGREES, UNLESS DIRECTED OTHERWISE BY THE ENGINEER.
2. SPACING = 40' FOR CENTERLINE MARKERS.
3. ALL RPM's ON CENTERLINE ARE 2-WAY YELLOW. LANE LINE MARKERS ARE WHITE/RED.
4. MARKERS SHALL BE INSTALLED ACCORDING TO F.H.W.A. MEMORANDUM HIO-21.
5. MARKERS SHALL BE FIELD ADJUSTED TO BE LOCATED IN CENTER OF THE 30' GAP OF A 30'/10' SKIP/DASH CENTERLINE.
6. RPM's WHICH ARE TO BE LOCATED WITHIN THE INTERSECTION OF A CROSS STREET, SHALL NOT BE INSTALLED.
7. A MINIMUM OF 4 WHITE/RED MARKERS SHALL BE INSTALLED ALONG THE TURN LANE LINE.
8. RPM's INSTALLED ON MULTI-LANE ROAD SECTIONS SHALL BE INSTALLED ON THE WHITE SKIP-DASH LANE LINE ONLY. THESE RPM's SHALL BE LOCATED IN CENTER OF THE 30' GAP OF A 30'/10' SKIP/DASH LANE LINE.

CROSSWALKS

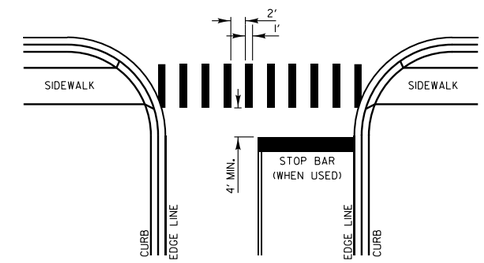

CROSSWALK NOTES:

1. WIDTH OF THE CROSSWALK IS GENERALLY 6' EXCEPT AT SCHOOL CROSSINGS AND BICYCLE CROSSINGS, WHICH CAN BE 8'.
2. THE STOP BAR SHOULD BE INSTALLED A MINIMUM OF 4' IN ADVANCE OF THE CROSSWALK.

CURB MARKING

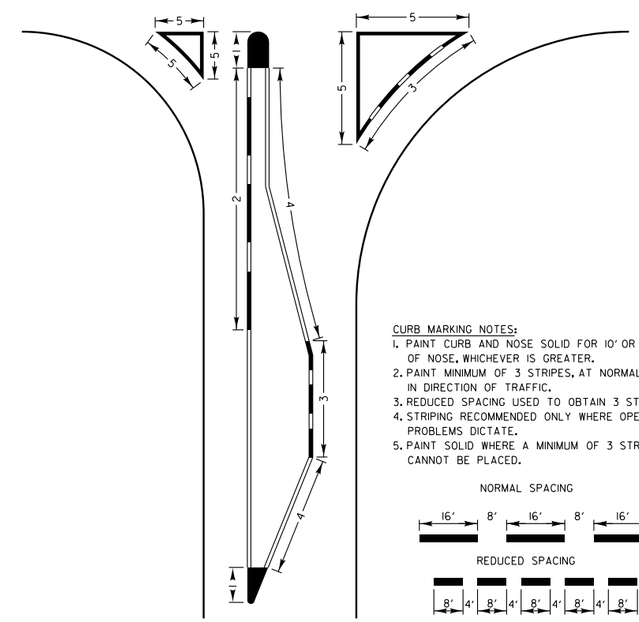

CURB MARKING NOTES:

1. PAINT CURB AND NOSE SOLID FOR 10' OR RADIUS OF NOSE, WHICHEVER IS GREATER.
2. PAINT MINIMUM OF 3 STRIPES, AT NORMAL SPACING, IN DIRECTION OF TRAFFIC.
3. REDUCED SPACING USED TO OBTAIN 3 STRIPE MINIMUM.
4. STRIPING RECOMMENDED ONLY WHERE OPERATIONAL PROBLEMS DICTATE.
5. PAINT SOLID WHERE A MINIMUM OF 3 STRIPES CANNOT BE PLACED.

NORMAL SPACING

REDUCED SPACING

REVISIONS	DATE
SEPARATED RAILROAD SHEET	06/02/08
REVISED RPM DETAILS	07/1/12
RAISED TO RECESSED MARKERS	12/2/13
REMOVE STATION NUMBERS	5/30/14

LakeCounty Division of Transportation

APPROVED BY: A. KHAWAJA
DATE: APRIL 1, 2007

TYPICAL PAVEMENT MARKINGS FOR COUNTY HIGHWAYS

SHEET 2 OF 2

LC7800

REVISIONS / REMARKS					
NO.	DESCRIPTION	DATE	BY	SURVEYOR:	/
		/ /		DSGNR/LIAISON:	
		/ /		PLOTTED BY:	HDI8572 3/16/2016

LakeCounty Division of Transportation

MILLER ROAD RESURFACING

LAKE COUNTY STANDARDS & DETAILS

ROUTE	SECTION	SECTION NUMBER	SHEET	SHEETS
CH2	118	14-00118-11-RS	48	79

FILE NAME: U:\Design\Ruiz\14-00118-11-RS Miller Road Resurfacing\Plans\14-00118-11-RS lcdot standard 7800.dgn

TYPICAL SHORT TERM PAVEMENT MARKINGS

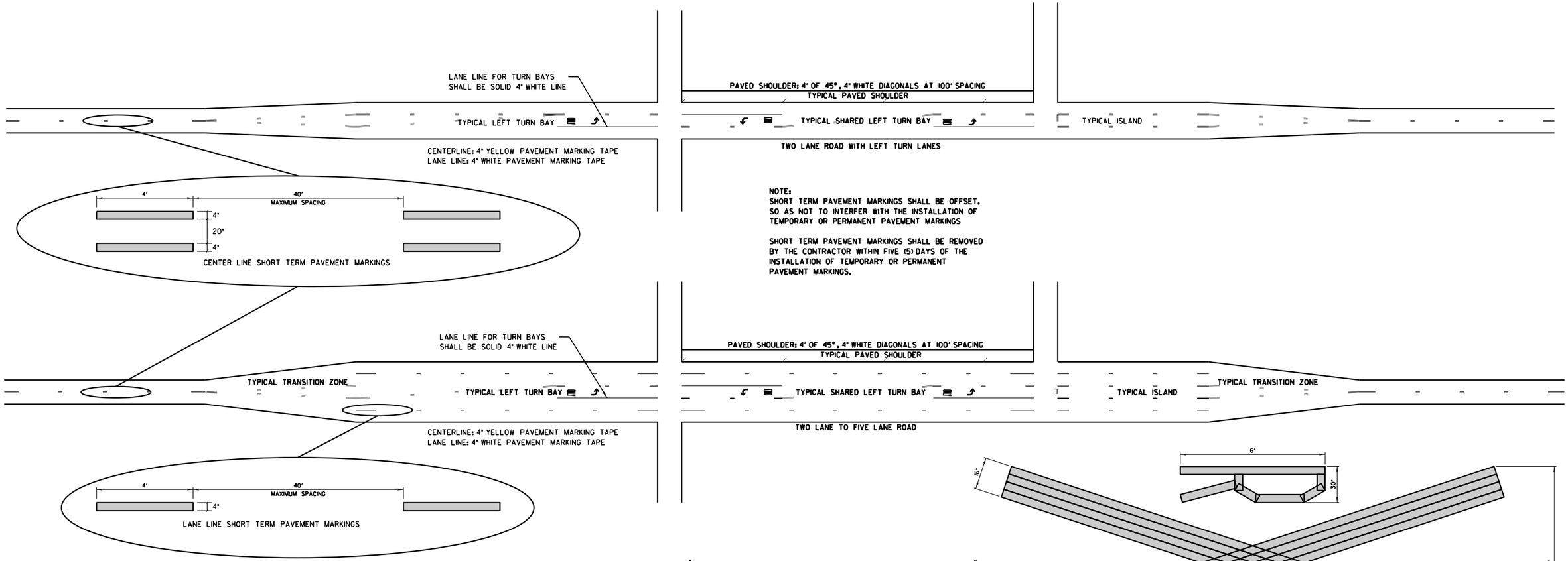

NOTE:
SHORT TERM PAVEMENT MARKINGS SHALL BE OFFSET, SO AS NOT TO INTERFER WITH THE INSTALLATION OF TEMPORARY OR PERMANENT PAVEMENT MARKINGS

SHORT TERM PAVEMENT MARKINGS SHALL BE REMOVED BY THE CONTRACTOR WITHIN FIVE (5) DAYS OF THE INSTALLATION OF TEMPORARY OR PERMANENT PAVEMENT MARKINGS.

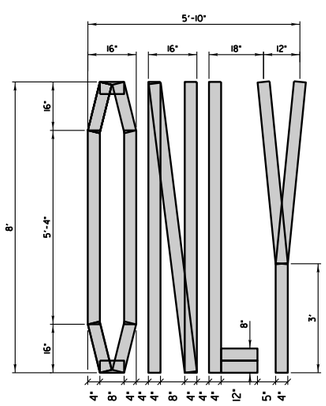

QUANTITY:
4" LINE = 64 FT. (21 SQ. FT.)

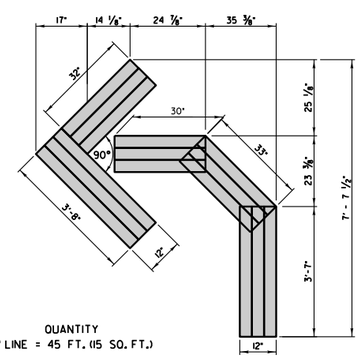

QUANTITY
4" LINE = 45 FT. (15 SQ. FT.)

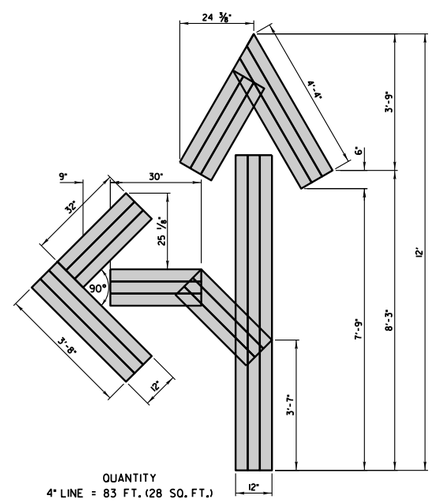

QUANTITY
4" LINE = 83 FT. (28 SQ. FT.)

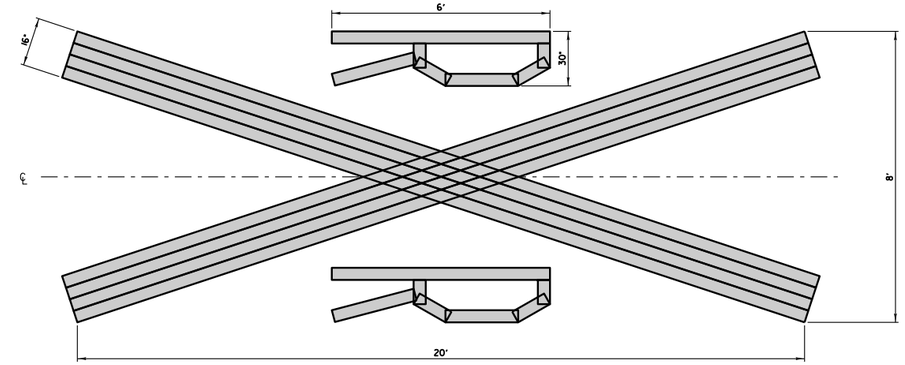

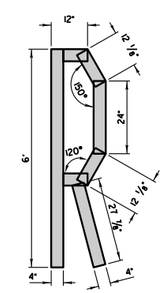

QUANTITY
4" LINE = 200 FT. (67 SQ. FT.)
("X" = 172 FT.)
("R" = 14 FT.)

REVISIONS	DATE
REMOVE DUAL DIMENSIONS	2/18/08

LakeCounty
Division of Transportation

APPROVED BY: A. KHAWAJA
DATE: APRIL 1, 2007

SHORT TERM PAVEMENT MARKINGS

LC7802

REVISIONS / REMARKS					
NO.	DESCRIPTION	DATE	BY	SURVEYOR:	/
		/ /		DSGNR/LIAISON:	
		/ /		PLOTTED BY:	HD18572 3/16/2016

LakeCounty
Division of Transportation

MILLER ROAD RESURFACING

LAKE COUNTY STANDARDS & DETAILS

ROUTE	SECTION	SECTION NUMBER	SHEET	SHEETS
CH2	118	14-00118-11-RS	49	79

FILE NAME: U:\Design\Ruiz\14-00118-11-RS Miller Road Resurfacing\Plans\14-00118-11-RS lcdot standard 7802.dgn

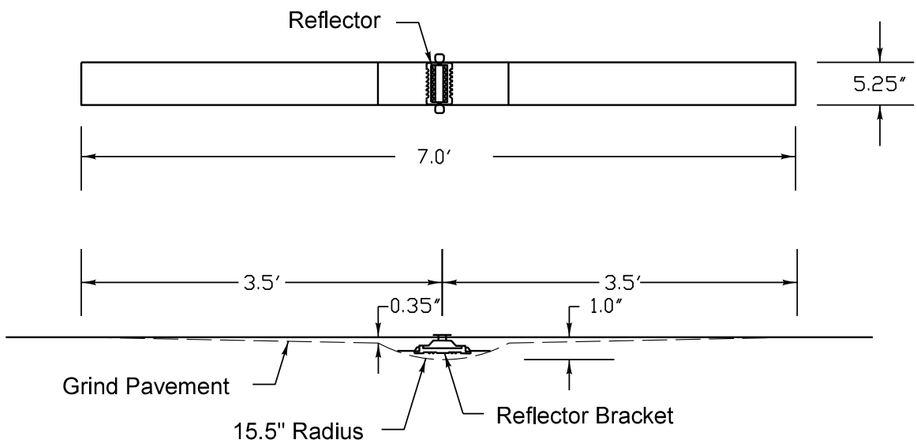

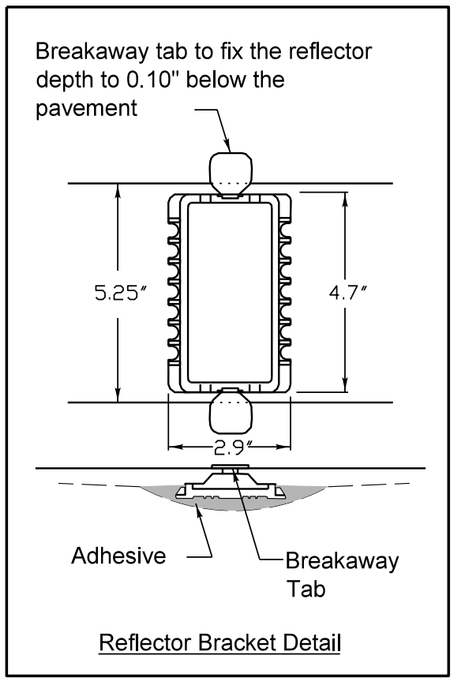

Reflector Bracket Detail

Notes

1. The reflective pavement marker lens shall be a 3M 190 series pavement marker or an approved equal.

2. The reflector bracket shall be made of a polycarbonate and shall be a MarkerOne Series R100 or an approved equal.

3. The adhesive used shall meet the requirements of AASHTO M237 specification for adhesives to be used in cementing asphalt surfaces.

4. Markers shall be placed at 40' intervals on lane lines and painted medians and 40' intervals on curves and approaching intersections as shown on LCDOT standard LC7800.

REVISIONS	DATE

LakeCounty Division of Transportation

APPROVED BY: JN
DATE: 12/02/13

RECESSED REFLECTIVE PAVEMENT MARKER

LC7805

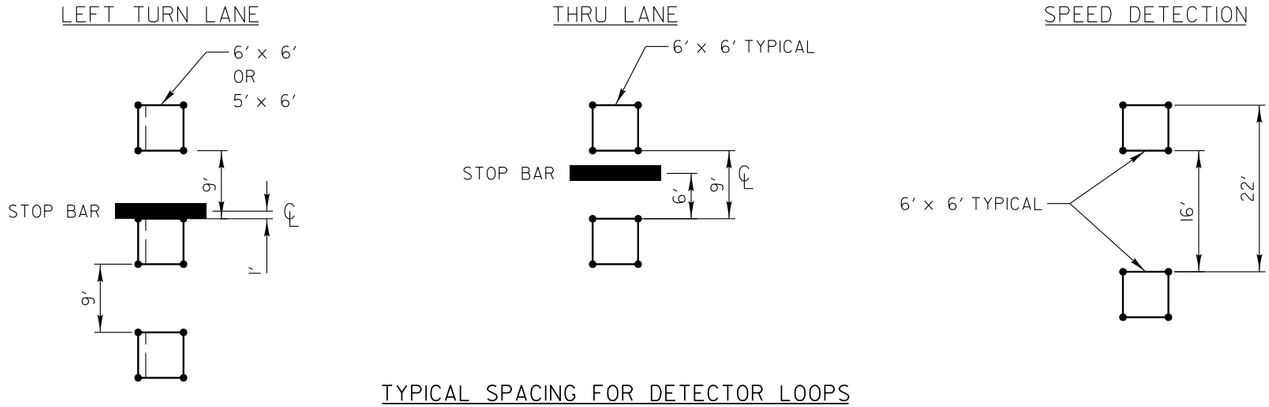

TYPICAL SPACING FOR DETECTOR LOOPS

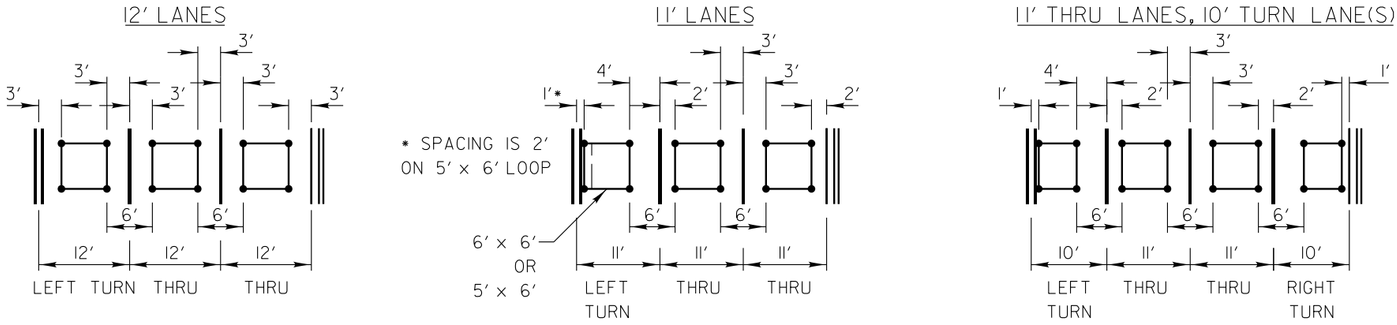

TYPICAL LATERAL PLACEMENT FOR DETECTOR LOOPS

REVISIONS	DATE

LakeCounty Division of Transportation

APPROVED BY: A. KHAWAJA
DATE: APRIL 1, 2007

TYPICAL DETECTOR LOOP LAYOUTS

LC8600

NO.	REVISIONS / REMARKS DESCRIPTION	DATE	BY	SURVEYOR: DSGNR/LIAISON: PLOTTED BY:
		/ /		ND8572 3/16/206

FILE NAME: U:\Design\Ruiz\14-00118-11-RS Miller Road Resurfacing\Plans\14-00118-11-RS lcd01 standards.dgn

LakeCounty Division of Transportation

MILLER ROAD RESURFACING
LAKE COUNTY STANDARDS & DETAILS

ROUTE	SECTION	SECTION NUMBER	SHEET	SHEETS
CH2	118	14-00118-11-RS	50	79

ABV	ABOVE
A/C	ACCESS CONTROL
AC	ACRE
ADJ	ADJUST
AS	AERIAL SURVEYS
AGG	AGGREGATE
AH	AHEAD
APT	APARTMENT
ASPH	ASPHALT
AUX	AUXILIARY
AGS	AUXILIARY GAS VALVE (SERVICE)
AVE	AVENUE
AX	AXIS OF ROTATION
BK	BACK
B-B	BACK TO BACK
BKPL	BACKPLATE
B	BARN
BARR	BARRICADE
BGN	BEGIN
BM	BENCHMARK
BIND	BINDER
BIT	BITUMINOUS
BTM	BOTTOM
BLVD	BOULEVARD
BRK	BRICK
BBOX	BUFFALO BOX
BLDG	BUILDING
CIP	CAST IRON PIPE
CB	CATCH BASIN
C-C	CENTER TO CENTER
CL	CENTERLINE OR CLEARANCE
CL-E	CENTERLINE TO EDGE
CL-F	CENTERLINE TO FACE
CTS	CENTERS
CERT	CERTIFIED
CHSLD	CHISELED
CS	CITY STREET
CP	CLAY PIPE
CLSD	CLOSED
CLID	CLOSED LID
CT	COAT OR COURT
COMB	COMBINATION
C	COMMERCIAL BUILDING
CE	COMMERCIAL ENTRANCE
CONC	CONCRETE
CONST	CONSTRUCT
CONTD	CONTINUED
CONT	CONTINUOUS
COR	CORNER
CORR	CORRUGATED
CMP	CORRUGATED METAL PIPE
CNTY	COUNTY
CH	COUNTY HIGHWAY
CSE	COURSE
XSECT	CROSS SECTION
m^3	CUBIC METER
mm^3	CUBIC MILLIMETER
CU YD	CUBIC YARD
CULV	CULVERT
C&G	CURB & GUTTER
D	DEGREE OF CURVE
DC	DEPRESSED CURVE
DET	DETECTOR
DIA	DIAMETER
DIST	DISTRICT
DOM	DOMESTIC
DBL	DOUBLE
DSEL	DOWNSTREAM ELEVATION
DSFL	DOWNSTREAM FLOWLINE
DR	DRAINAGE OR DRIVE
DI	DRAINAGE INLET OR DROP INLET
DRV	DRIVEWAY
DCT	DUCT
EA	EACH
EB	EASTBOUND
EOP	EDGE OF PAVEMENT
E-CL	EDGE TO CENTERLINE
E-E	EDGE TO EDGE
EL	ELEVATION
ENTR	ENTRANCE
EXC	EXCAVATION
EX	EXISTING
EXPWAY	EXPRESSWAY
E	EXTERNAL DISTANCE OF HORIZONTAL CURVE
E	OFFSET DISTANCE TO VERTICAL CURVE
F-F	FACE TO FACE
FA	FEDERAL AID
FAI	FEDERAL AID INTERSTATE
FAP	FEDERAL AID PRIMARY
FAS	FEDERAL AID SECONDARY
FAUS	FEDERAL AID URBAN SECONDARY
FP	FENCE POST
FE	FIELD ENTRANCE
FH	FIRE HYDRANT
FL	FLOW LINE
FB	FOOT BRIDGE
FDN	FOUNDATION
FR	FRAME
F&G	FRAME & GRATE
FRWAY	FREEWAY
GAL	GALLON
GALV	GALVANIZED
G	GARAGE
GM	GAS METER
GV	GAS VALVE
GRAN	GRANULAR
GR	GRATE
GRVL	GRAVEL
GND	GROUND
GUT	GUTTER
GP	GUY POLE
GW	GUY WIRE
HH	HANDHOLE
HATCH	HATCHING
HD	HEAD
HDW	HEADWALL
HDUTY	HEAVY DUTY
ha	HECTARE
HMA	HOT MIX ASPHALT
HWY	HIGHWAY
HORIZ	HORIZONTAL
HSE	HOUSE
IL	ILLINOIS
IMP	IMPROVEMENT
IN DIA	INCH DIAMETER
INL	INLET
INST	INSTALLATION
IDS	INTERSECTION DESIGN STUDY
INV	INVERT
IP	IRON PIPE
IR	IRON ROD
JT	JOINT
kg	KILOGRAM
km	KILOMETER
LS	LANDSCAPING
LN	LANE
LT	LEFT
LP	LIGHT POLE
LGT	LIGHTING
LF	LINEAL FEET OR LINEAR FEET
L	LITER OR CURVE LENGTH
LC	LONG CHORD
LNG	LONGITUDINAL
L SUM	LUMP SUM
MACH	MACHINE
MB	MAIL BOX
MH	MANHOLE
MATL	MATERIAL
MED	MEDIAN
m	METER
METH	METHOD
M	MID-ORDINATE
mm	MILLIMETER
mm DIA	MILLIMETER DIAMETER
MIX	MIXTURE
MBH	MOBILE HOME
MOD	MODIFIED
MFT	MOTOR FUEL TAX
N & BC	NAIL & BOTTLE CAP
N & C	NAIL & CAP
N & W	NAIL & WASHER
NOAA	NATIONAL OCEANIC ATMOSPHERIC ADMINISTRATION
NC	NORMAL CROWN
NB	NORTHBOUND
NE	NORTHEAST
NW	NORTHWEST
OLID	OPEN LID
PAT	PATTERN
PVD	PAVED
PVMT	PAVEMENT
PM	PAVEMENT MARKING
PED	PEDESTAL
PNT	POINT
PC	POINT OF CURVATURE
PI	POINT OF INTERSECTION OF HORIZONTAL CURVE
PRC	POINT OF REVERSE CURVE
PT	POINT OF TANGENCY
POT	POINT ON TANGENT
POLYETH	POLYETHYLENE
PCC	PORTLAND CEMENT CONCRETE
PP	POWER POLE OR PRINCIPAL POINT
PRM	PRIME
PE	PRIVATE ENTRANCE
PROF	PROFILE
PGL	PROFILE GRADELINE
PROJ	PROJECT
P.C.	PROPERTY CORNER
PL	PROPERTY LINE
PR	PROPOSED
R	RADIUS
RR	RAILROAD
RRS	RAILROAD SPIKE
RPS	REFERENCE POINT STAKE
REF	REFLECTIVE
RCCP	REINFORCED CONCRETE CULVERT PIPE
REINF	REINFORCEMENT
REM	REMOVAL
RC	REMOVE CROWN
REP	REPLACEMENT
REST	RESTAURANT
RESURF	RESURFACING
RET	RETAINING
RT	RIGHT
ROW	RIGHT-OF-WAY
RD	ROAD
RDWY	ROADWAY
RTE	ROUTE
SAN	SANITARY
SANS	SANITARY SEWER
SEC	SECTION
SEED	SEEDING
SHAP	SHAPING
S	SHED
SH	SHEET
SHLD	SHOULDER
SW	SIDEWALK OR SOUTHWEST
SIG	SIGNAL
SOD	SODDING
SM	SOLID MEDIAN
SB	SOUTHBOUND
SE	SOUTHEAST
SPL	SPECIAL
SD	SPECIAL DITCH
SQ FT	SQUARE FEET
m^2	SQUARE METER
mm^2	SQUARE MILLIMETER
SQ YD	SQUARE YARD
STB	STABILIZED
STD	STANDARD
SBI	STATE BOND ISSUE
SR	STATE ROUTE
STA	STATION
SPBGR	STEEL PLATE BEAM GUARDRAIL
SS	STORM SEWER
STY	STORY
ST	STREET
STR	STRUCTURE
e	SUPERELEVATION RATE
S.E. RUN.	SUPERELEVATION RUNOFF LENGTH
SURF	SURFACE
SMK	SURVEY MARKER
T	TANGENT DISTANCE
T.R.	TANGENT RUNOUT DISTANCE
TEL	TELEPHONE
TB	TELEPHONE BOX
TP	TELEPHONE POLE
TEMP	TEMPORARY
TBM	TEMPORARY BENCH MARK
TD	TILE DRAIN
TBE	TO BE EXTENDED
TBR	TO BE REMOVED
TBS	TO BE SAVED
TWP	TOWNSHIP
TR	TOWNSHIP ROAD
TS	TRAFFIC SIGNAL
TSCB	TRAFFIC SIGNAL CONTROL BOX
TSC	TRAFFIC SYSTEMS CENTER
TRVS	TRANSVERSE
TRVL	TRAVEL
TRN	TURN
TY	TYPE
T-A	TYPE A
TYP	TYPICAL
UNDGND	UNDERGROUND
USGS	U.S. GEOLOGICAL SURVEY
USEL	UPSTREAM ELEVATION
USFL	UPSTREAM FLOWLINE
UTIL	UTILITY
VBOX	VALVE BOX
VV	VALVE VAULT
VLT	VAULT
VEH	VEHICLE
VP	VENT PIPE
VERT	VERTICAL
VC	VERTICAL CURVE
VPC	VERTICAL POINT OF CURVATURE
VPI	VERTICAL POINT OF INTERSECTION
VPT	VERTICAL POINT OF TANGENCY
WM	WATER METER
WV	WATER VALVE
WMAIN	WATER MAIN
WB	WESTBOUND
WILDFL	WILDFLOWERS
W	WITH
WO	WITHOUT

Illinois Department of Transportation

PASSED January 1, 2011
Michael Brand
ENGINEER OF POLICY AND PROCEDURES
APPROVED January 1, 2011
Scott E. Schaffer
ENGINEER OF DESIGN AND ENVIRONMENT

ISSUED 1-1-97

DATE	REVISIONS
1-1-11	Updated abbreviations
	and symbols.
1-1-08	Updated abbreviations
	and symbols.

STANDARD SYMBOLS, ABBREVIATIONS AND PATTERNS

(Sheet 1 of 8)

STANDARD 000001–06

ADJUSTMENT ITEMS

	EX	PR
Structure To Be Adjusted		ADJ
Structure To Be Cleaned		C
Main Structure To Be Filled		FM
Structure To Be Filled		F
Structure To Be Filled Special		FSP
Structure To Be Removed		R
Structure To Be Reconstructed		REC
Structure To Be Reconstructed Special		RSP
Frame and Grate To Be Adjusted		A
Frame and Lid To Be Adjusted		A
Domestic Service Box To Be Adjusted		A
Valve Vault To Be Adjusted		A
Special Adjustment		SP
Item To Be Abandoned		AB
Item To Be Moved		M
Item To Be Relocated		REL
Pavement Removal and Replacement		

Illinois Department of Transportation

PASSED January 1, 2011

Michael Brand

ENGINEER OF POLICY AND PROCEDURES

APPROVED January 1, 2011

ENGINEER OF DESIGN AND ENVIRONMENT

ISSUED 1-1-97

ALIGNMENT ITEMS

	EX	PR
Baseline		
Centerline		
Centerline Break Circle		
Baseline Symbol		
Centerline Symbol		
PI Indicator		
Point Indicator		
Horizontal Curve Data (Half Size)	CURVE P.I. STA= Δ= D= R= T= L= E= e= T.R.= S.E. RUN= P.C. STA= P.T. STA=	CURVE P.I. STA= Δ= D= R= T= L= E= e= T.R.= S.E. RUN= P.C. STA= P.T. STA=

BOUNDARIES ITEMS

	EX	PR
Dashed Property Line		
Solid Property/Lot Line		
Section/Grant Line		
Quarter Section Line		
Quarter/Quarter Section Line		
County/Township Line		
State Line		
Iron Pipe Found		
Iron Pipe Set		
Survey Marker		
Property Line Symbol		
Same Ownership Symbol (Half Size)		
Northwest Quarter Corner (Half Size)		
Section Corner (Half Size)		
Southeast Quarter Corner (Half Size)		

CONTOUR ITEMS

	EX	PR
Approx. Index Line		
Approx. Intermediate Line		
Index Contour		
Intermediate Contour		

DRAINAGE ITEMS

	EX	PR
Channel or Stream Line		
Culvert Line		
Grading & Shaping Ditches		
Drainage Boundary Line		
Paved Ditch		
Aggregate Ditch		
Pipe Underdrain		
Storm Sewer		
Flowline		
Ditch Check		
Headwall		
Inlet		
Manhole		
Summit		
Roadway Ditch Flow		
Swale		
Catch Basin		
Culvert End Section		
Water Surface Indicator		
Riprap		

STANDARD SYMBOLS, ABBREVIATIONS AND PATTERNS

(Sheet 2 of 8)

STANDARD 000001–06

EROSION & SEDIMENT CONTROL ITEMS

	EX	PR
Cleaning & Grading Limits		
Dike		
Erosion Control Fence		
Perimeter Erosion Barrier		
Temporary Fence		
Ditch Check Temporary		
Ditch Check Permanent		
Inlet & Pipe Protection		
Sediment Basin		
Erosion Control Blanket		
Fabric Formed Concrete Revetment Mat		
Turf Reinforcement Mat		
Mulch Temporary		
Mulch Method 1		
Mulch Method 2 Stabilized		
Mulch Method 3 Hydraulic		

NON-HIGHWAY IMPROVEMENT ITEMS

	EX	PR
Noise Attn./Levee		
Field Line		
Fence		
Base of Levee		
Mailbox		
Multiple Mailboxes		
Pay Telephone		
Advertising Sign		

LANDSCAPING ITEMS

	EX	PR
Contour Mounding Line		
Fence		
Fence Post		
Shrubs		
Mowline		
Perennial Plants		
Seeding Class 2		
Seeding Class 2A		
Seeding Class 4		
Seeding Class 4 & 5 Combined		

EXISTING LANDSCAPING ITEMS (contd.)

	EX	PR
Seeding Class 5		
Seeding Class 7		
Seedlings Type 1		
Seedlings Type 2		
Sodding		
Mowstake w/Sign		
Tree Trunk Protection		
Evergreen Tree	E	
Shade Tree	E	+

LIGHTING

	EX	PR
Duct		
Conduit		
Electrical Aerial Cable	A	A
Electrical Buried Cable	L	L
Controller		
Underpass Luminaire		
Power Pole		

Illinois Department of Transportation

PASSED January 1, 2011
Michael Brand
ENGINEER OF POLICY AND PROCEDURES
APPROVED January 1, 2011
Scott E. Byers
ENGINEER OF DESIGN AND ENVIRONMENT

ISSUED 1-1-97

STANDARD SYMBOLS, ABBREVIATIONS AND PATTERNS

(Sheet 3 of 8)

STANDARD 000001-06

LIGHTING (contd.)

	EX	PR
Pull Point	Ⓟ	Ⓟ
Handhole		
Heavy Duty Handhole	H	H
Junction Box		
Light Unit Comb.		
Electrical Ground		
Traffic Flow Arrow		
High Mast Pole (Half Size)		
Light Unit-1		

PAVEMENT (MISC.)

	EX	PR
Keyed Long. Joint		
Keyed Long. Joint w/Tie Bars		
Sawed Long. Joint w/Tie Bars		
Bituminous Shoulder		
Bituminous Taper		
Stabilized Driveway		
Widening		

PAVEMENT MARKINGS

	EX	PR
Bike Lane Symbol		
Bike Lane Text		BIKE LANE
Handicap Symbol		
RR Crossing		RR
Raised Marker Amber 1 Way		
Raised Marker Amber 2 Way		
Raised Marker Crystal 1 Way		
Two Way Turn Left		
Shoulder Diag. Pattern		
Skip-Dash White		
Skip-Dash Yellow		
Stop Line		
Solid Line		
Double Centerline		
Dotted Lines		
CL 2Ln 2Way RRPM 12.2 m (40') o.c.		
CL 2Ln 2Way RRPM 80' (24.4 m) o.c.		
CL Multilane Div. RRPM 40' (12.2 m) o.c.		
CL Multilane Div. RRPM 80' (24.4 m) o.c.		
CL Multilane Div. Dbl. RRPM 80' (24.4 m) o.c.		
CL Multilane Undiv.		
Two Way Turn Left Line		

Illinois Department of Transportation

PASSED January 1, 2011
Michael Brand
ENGINEER OF POLICY AND PROCEDURES

APPROVED January 1, 2011
Scott E. Stokes
ENGINEER OF DESIGN AND ENVIRONMENT

ISSUED 1-1-97

STANDARD SYMBOLS, ABBREVIATIONS AND PATTERNS

(Sheet 4 of 8)

STANDARD 000001–06

PAVEMENT MARKINGS (contd.)

	EX	PR
Urban Combination Left		
Urban Combination Right		
Urban Left Turn Arrow		
Urban Right Turn Arrow		
Urban Left Turn Only		ONLY
Urban Right Turn Only		ONLY
Urban Thru Only		ONLY
Urban U-Turn		
Urban Combined U-Turn		
Rural Combination Left		
Rural Combination Right		
Rural Left Turn Arrow		
Rural Right Turn Arrow		
Rural Left Turn Only		ONLY
Rural Right Turn Only		ONLY
Rural Thru Only		ONLY

RAILROAD ITEMS

	EX	PR
Abandoned Railroad		
Railroad		
Railroad Point		
Control Box		
Crossing Gate		
Flashing Signal		
Railroad Cant. Mast Arm		
Crossbuck		

REMOVAL ITEMS

	EX	PR
Removal Tic		
Bituminous Removal		
Hatch Pattern		
Tree Removal Single		

RIGHT OF WAY ITEMS

	EX	PR
Future ROW Corner Monument		
ROW Marker		
ROW Line		
Easement		
Temporary Easement		

Illinois Department of Transportation

PASSED January 1, 2011

Michael Brand
ENGINEER OF POLICY AND PROCEDURES

APPROVED January 1, 2011

Scott E. Stokes
ENGINEER OF DESIGN AND ENVIRONMENT

ISSUED 1-1-97

STANDARD SYMBOLS, ABBREVIATIONS AND PATTERNS

(Sheet 5 of 8)

STANDARD 000001–06

RIGHT OF WAY ITEMS (contd.)

	EX	PR
Access Control Line	AC	AC
Access Control Line & ROW	AC	AC
Access Control Line & ROW with Fence	AR	AC
Excess ROW Line		XS

ROADWAY PLAN ITEMS

	EX	PR
Cable Barrier		
Concrete Barrier		
Edge of Pavement		
Bit Shoulders, Medians and C&G Line		
Aggregate Shoulder		
Sidewalks, Driveways		
Guardrail		
Guardrail Post		
Traffic Sign		
Corrugated Median		
Impact Attenuator		
North Arrow with District Office (Half Size)	N	
Match Line		STA. 45+00
Slope Limit Line		
Typical Cross-Section Line		

ROADWAY PROFILES

	EX	PR
P.I. Indicator		
Point Indicator		
Earthworks Balance Point		
Begin Point		
Vert. Curve Data	VPI = ELEV= L = E =	VPI = ELEV= L = E =
Ditch Profile Left Side		
Ditch Profile Right Side		
Roadway Profile Line		
Storm Sewer Profile Left Side		
Storm Sewer Profile Right Side		

SIGNING ITEMS

	EX	PR
Cone, Drum or Barricade		
Barricade Type II		
Barricade Type III		
Barricade With Edge Line		
Flashing Light Sign		
Panels I		
Panels II		
Direction of Traffic		
Sign Flag (Half Size)		

SIGNING ITEMS (contd.)

	EX	PR
Reverse Left W1-4L (Half Size)		
Reverse Right W1-4R (Half Size)		
Two Way Traffic Sign W6-3 (Half Size)		
Detour Ahead W20-2(0) (Half Size)		DETOUR AHEAD
Left Lane Closed Ahead W20-5L(0) (Half Size)		LEFT LANE CLOSED AHEAD
Right Lane Closed Ahead W20-5R(0) (Half Size)		RIGHT LANE CLOSED AHEAD
Road Closed Ahead W20-3(0) (Half Size)		ROAD CLOSED AHEAD
Road Construction Ahead W20-1-(0) (Half Size)		ROAD CONSTRUCTION AHEAD
Single Lane Ahead (Half Size)		SINGLE LANE AHEAD
Transition Left W4-2L (Half Size)		
Transition Right W4-2R (Half Size)		

Illinois Department of Transportation

PASSED January 1, 2011
Michael Brand
ENGINEER OF POLICY AND PROCEDURES
APPROVED January 1, 2011
ENGINEER OF DESIGN AND ENVIRONMENT

ISSUED 1-1-97

STANDARD SYMBOLS, ABBREVIATIONS AND PATTERNS

(Sheet 6 of 8)

STANDARD 000001–06

SIGNING ITEMS (contd.)

	EX	PR
One Way Arrow Lrg. W1-6-(0) (Half Size)		
Two Way Arrow Large W1-7-(0) (Half Size)		
Detour M4-10L-(0) (Half Size)		DETOUR
Detour M4-10R-(0) (Half Size)		DETOUR
One Way Left R6-1L (Half Size)		ONE WAY
One Way Right R6-1R (Half Size)		ONE WAY
Left Turn Lane R3-I100L (Half Size)		LEFT TURN LANE
Keep Left R4-7AL (Half Size)		KEEP LEFT
Keep Left R4-7BL (Half Size)		KEEP LEFT
Keep Right R4-7AR (Half Size)		KEEP RIGHT
Keep Right R4-7BR (Half Size)		KEEP RIGHT
Stop Here On Red R10-6-AL (Half Size)		STOP HERE ON RED
Stop Here On Red R10-6-AR (Half Size)		STOP HERE ON RED
No Left Turn R3-2 (Half Size)		
No Right Turn R3-1 (Half Size)		
Road Closed R11-2 (Half Size)		ROAD CLOSED
Road Closed Thru Traffic R11-2 (Half Size)		ROAD CLOSED TO THRU TRAFFIC

STRUCTURES ITEMS

	EX	PR
Box Culvert Barrel		
Box Culvert Headwall		
Bridge Pier		
Bridge		
Retaining Wall		
Temporary Sheet Piling		

TRAFFIC SHEET ITEMS

	EX	PR
Cable Number		
Left Turn Green	G	G
Left Turn Yellow	Y	Y
Signal Backplate		
Signal Section 8" (200 mm)		
Signal Section 12" (300 mm)		
Walk/Don't Walk Letters	DW W	DW W
Walk/Don't Walk Symbols		

TRAFFIC SIGNAL ITEMS

	EX	PR
Galv. Steel Conduit		
Underground Cable		
Detector Loop Line		
Detector Loop Large		
Detector Loop Small		
Detector Loop Quadrapole		

Illinois Department of Transportation

PASSED January 1, 2011

Michael Brand

ENGINEER OF POLICY AND PROCEDURES

APPROVED January 1, 2011

ENGINEER OF DESIGN AND ENVIRONMENT

ISSUED 1-1-97

STANDARD SYMBOLS, ABBREVIATIONS AND PATTERNS

(Sheet 7 of 8)

STANDARD 000001–06

TRAFFIC SIGNAL ITEMS (contd.)

	EX	PR
Detector Raceway	"E"	
Aluminum Mast Arm		
Steel Mast Arm		
Veh. Detector Magnetic		
Conduit Splice		
Controller		
Gulfbox Junction		
Wood Pole		
Temp. Signal Head		
Handhole		
Double Handhole		
Heavy Duty Handhole		
Junction Box		
Ped. Pushbutton Detector		
Ped. Signal Head		
Power Pole Service		
Priority Veh. Detector		
Signal Head		
Signal Head w/Backplate		
Signal Post		
Closed Circuit TV		
Video Detector System		

UNDERGROUND UTILITY ITEMS

	EX	PR	ABANDONED
Cable TV	CTV	CTV	CTV
Electric Cable	E	E	E
Fiber Optic	FO	FO	FO
Gas Pipe	G	G	G
Oil Pipe	O	O	O
Sanitary Sewer			
Telephone Cable	T	T	T
Water Pipe	W	W	W

UTILITIES ITEMS

	EX	PR
Controller		
Double Handhole		
Fire Hydrant		
GuyWire or Deadman Anchor		
Handhole		
Heavy Duty Handhole		
Junction Box		
Light Pole		
Manhole		
Pipeline Warning Sign		
Power Pole		
Power Pole with Light		
Sanitary Sewer Cleanout		
Splice Box Above Ground		
Telephone Splice Box Above Ground		
Telephone Pole		

UTILITY ITEMS (contd.)

	EX	PR
Traffic Signal		
Traffic Signal Control Box	TS	
Water Meter		
Water Meter Valve Box		
Profile Line		
Aerial Power Line	A A	A A

VEGETATION ITEMS

	EX	PR
Deciduous Tree		
Bush or Shrub		
Evergreen Tree		
Stump		
Orchard/Nursery Line		
Vegetation Line		
Woods & Bush Line		

WATER FEATURE ITEMS

	EX	PR
Stream or Drainage Ditch		
Waters Edge		
Water Surface Indicator		
Water Point		
Disappearing Ditch		
Marsh		
Marsh/Swamp Boundary		

Illinois Department of Transportation

PASSED January 1, 2011
Michael Brand
ENGINEER OF POLICY AND PROCEDURES

APPROVED January 1, 2011
ENGINEER OF DESIGN AND ENVIRONMENT

ISSUED 1-1-97

STANDARD SYMBOLS, ABBREVIATIONS AND PATTERNS

(Sheet 8 of 8)

STANDARD 000001–06

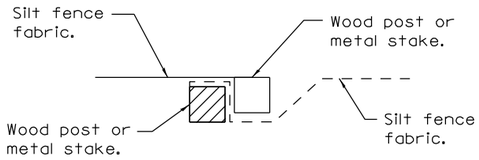

Place end-post (stake) of first silt fence adjacent to end-post (stake) of second silt fence with fabric positioned as swown.

STEP 1

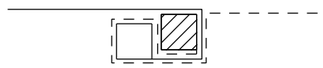

Rotate posts (stakes) together 180° clockwise and drive both posts (stakes) 18 (450) into ground.

STEP 2

ATTACHING TWO SILT FILTER FENCES

(Not applicable for J-hooks)

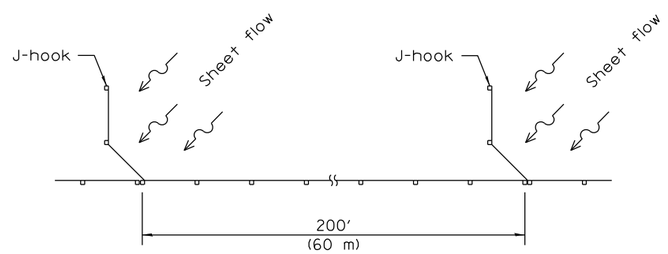

SILT FILTER J-HOOK PLACEMENT

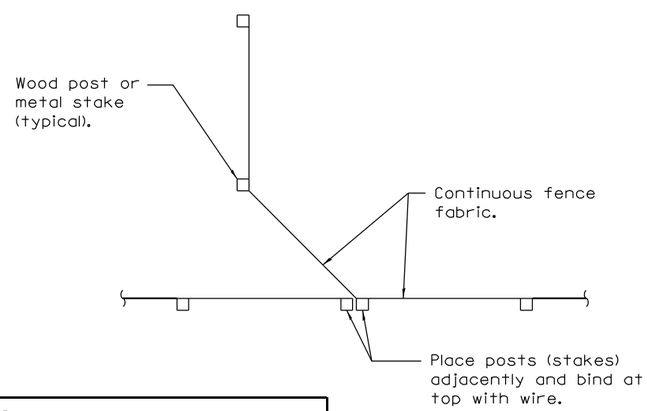

J-HOOK

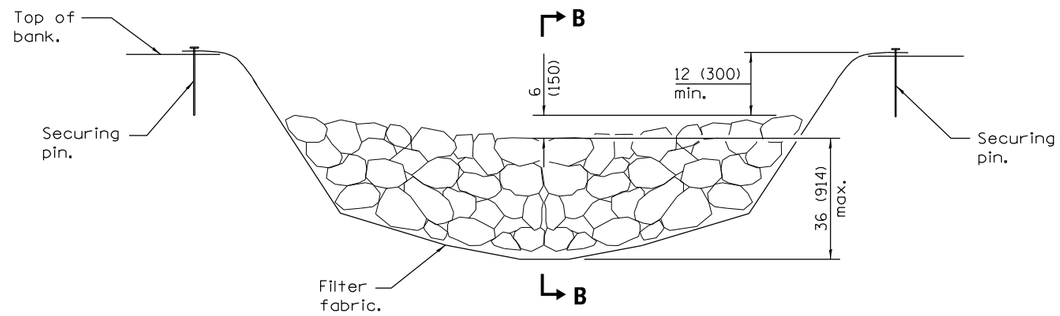

ELEVATION

- When the ditch check is within the clear zone and the road is open to traffic, the traffic approach slope of the aggregate shall be 1:4 (V:H).

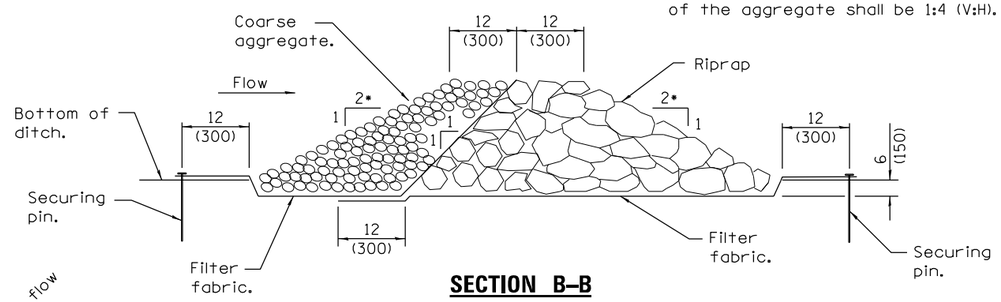

SECTION B–B

AGGREGATE DITCH CHECK

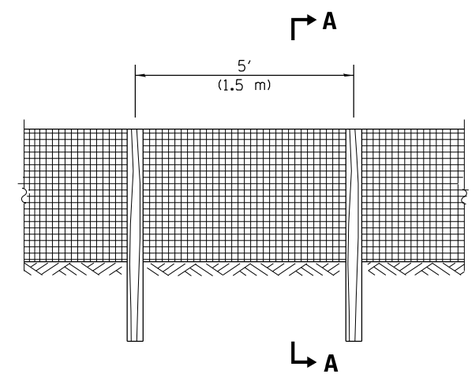

ELEVATION

SILT FILTER FENCE AS A PERIMETER EROSION BARRIER

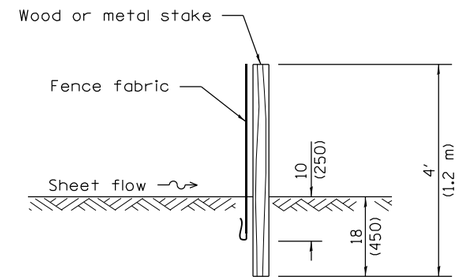

SLICE METHOD

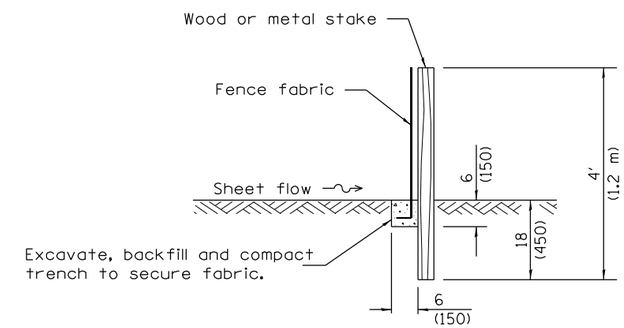

TRENCH METHOD

SECTION A–A

GENERAL NOTES

The installation details and dimensions shown for perimeter erosion barriers shall also apply for inlet and pipe protection.

All dimensions are in inches (millimeters) unless otherwise shown.

Illinois Department of Transportation

PASSED January 1, 2013
Michael Brand
ENGINEER OF POLICY AND PROCEDURES
APPROVED January 1, 2013
ENGINEER OF DESIGN AND ENVIRONMENT

ISSUED 1-1-97

DATE	REVISIONS
1-1-13	Corrected notation for
	flowline (℄) on SEDIMENT
	BASIN ELEVATION.
1-1-12	Omitted hay/straw perimeter
	barrier. Added SLICE METHOD
	to SECTION A-A.

TEMPORARY EROSION CONTROL SYSTEMS

(Sheet 1 of 2)

STANDARD 280001–07

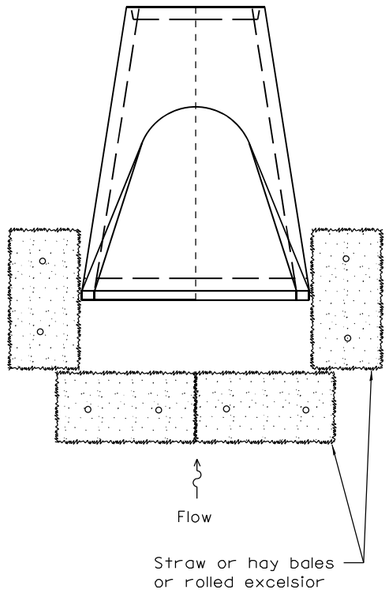

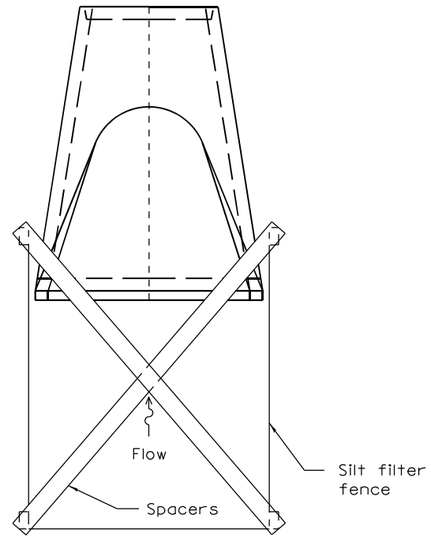

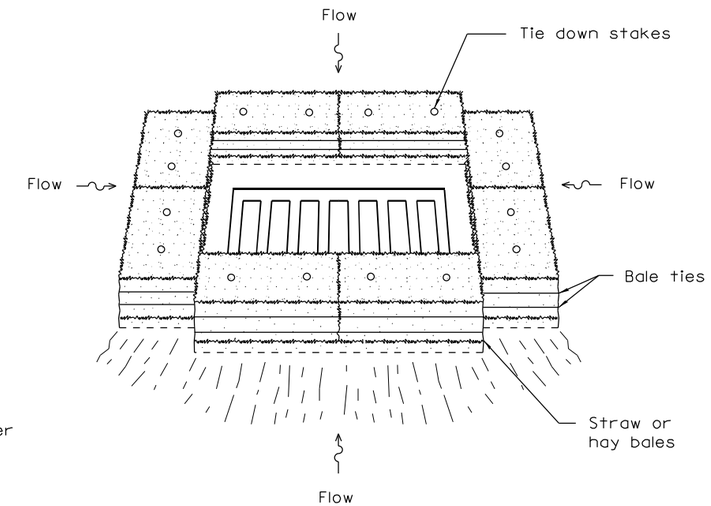

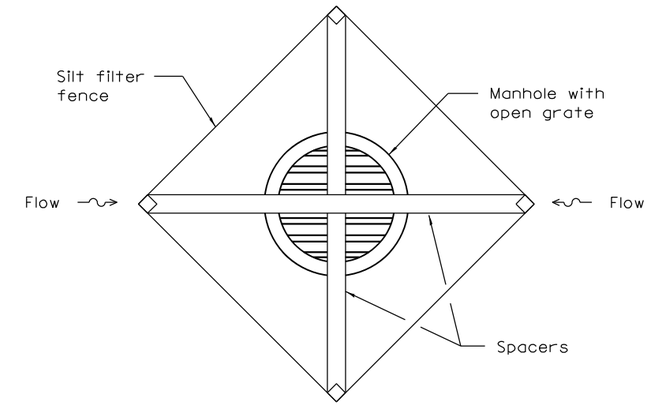

INLET AND PIPE PROTECTION

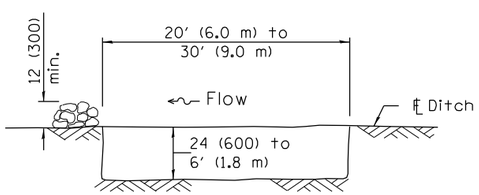

The performance of the basin will improve if put into a series.

ELEVATION

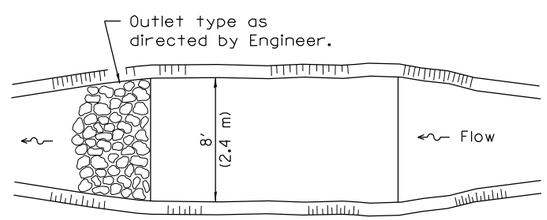

The long dimension should be parallel with the direction of the flow. Accumulated silt shall be removed anytime the basins become 75% filled.

PLAN

SEDIMENT BASIN

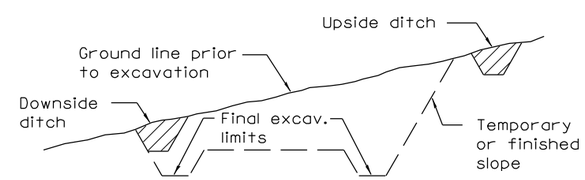

TYPICAL CUT CROSS-SECTION

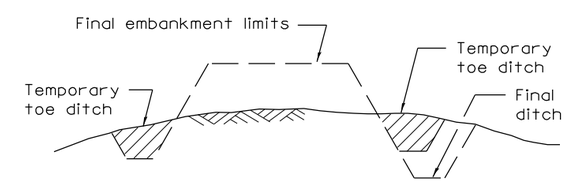

TYPICAL FILL CROSS-SECTION

TEMPORARY DITCHES FOR CUT & FILL SECTIONS

Illinois Department of Transportation

PASSED January 1, 2013

Michael Brand

ENGINEER OF POLICY AND PROCEDURES

APPROVED January 1, 2013

ENGINEER OF DESIGN AND ENVIRONMENT

ISSUED 1-1-97

TEMPORARY EROSION CONTROL SYSTEMS

(Sheet 2 of 2)

STANDARD 280001-07

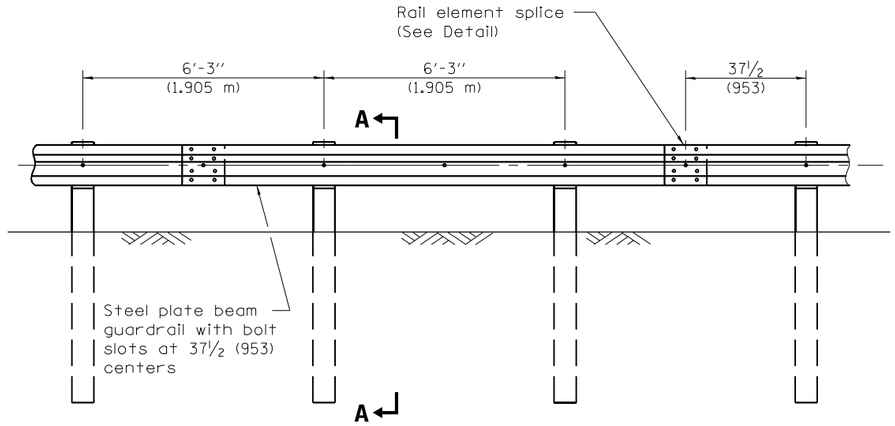

ELEVATION

TYPE A

6'-3" (1.905 m) Typical post spacing

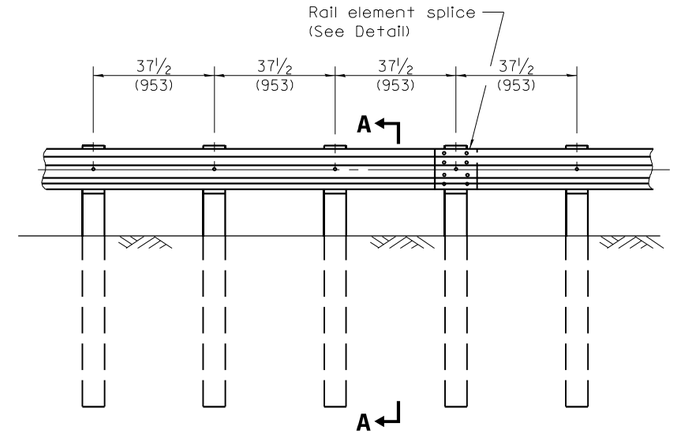

ELEVATION

TYPE B

37½ (953) Closed post spacing

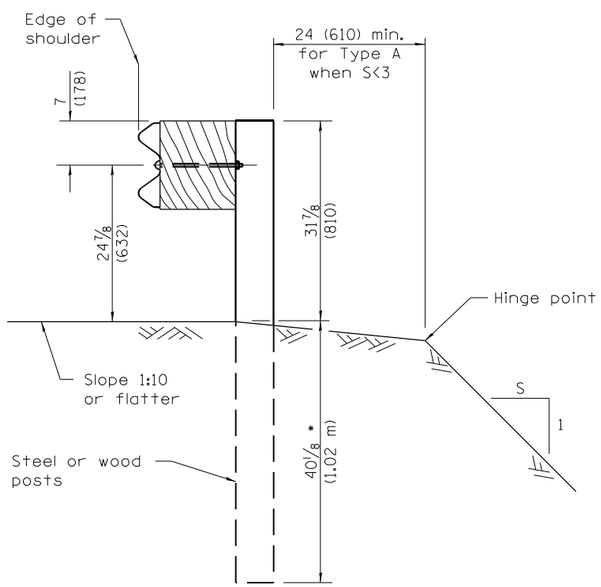

SECTION A–A

* When "S" is less than 3 and the distance from the back of post is less than 24 (610), the post shall be steel and the embedment shall be 76⅛ (1934).

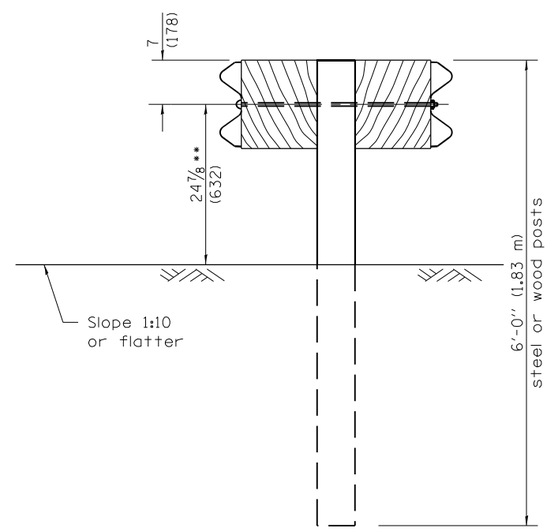

SECTION B–B

** When connecting Type D guardrail to an impact attenuator, adjust this dimension to 21⅞ (556) over a distance of 25'-0" (7.62 m) from point of connection.

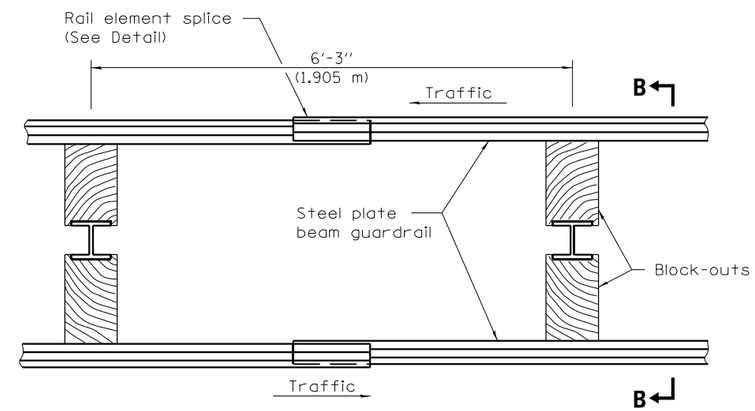

PLAN

TYPE D

Double steel plate beam guardrail
6'-3" (1.905 m) typical post spacing

GENERAL NOTES

All slope ratios are expressed as units of vertical displacement to units of horizontal displacement (V:H).

All dimensions are in inches (millimeters) unless otherwise shown.

Illinois Department of Transportation

PASSED January 1, 2012
Michael Brand
ENGINEER OF POLICY AND PROCEDURES

APPROVED January 1, 2012
Scott E. Stokes
ENGINEER OF DESIGN AND ENVIRONMENT

ISSUED 1-1-97

DATE	REVISIONS
1-1-12	Added req. for 9 ft. posts
	to be steel. Modified set
	back of g'rail behind curb.
1-1-11	Added note to Section B-B
	for conn. to impact att.
	Revised table on Sheet 4.

STEEL PLATE BEAM GUARDRAIL

(Sheet 1 of 4)

STANDARD 630001–10

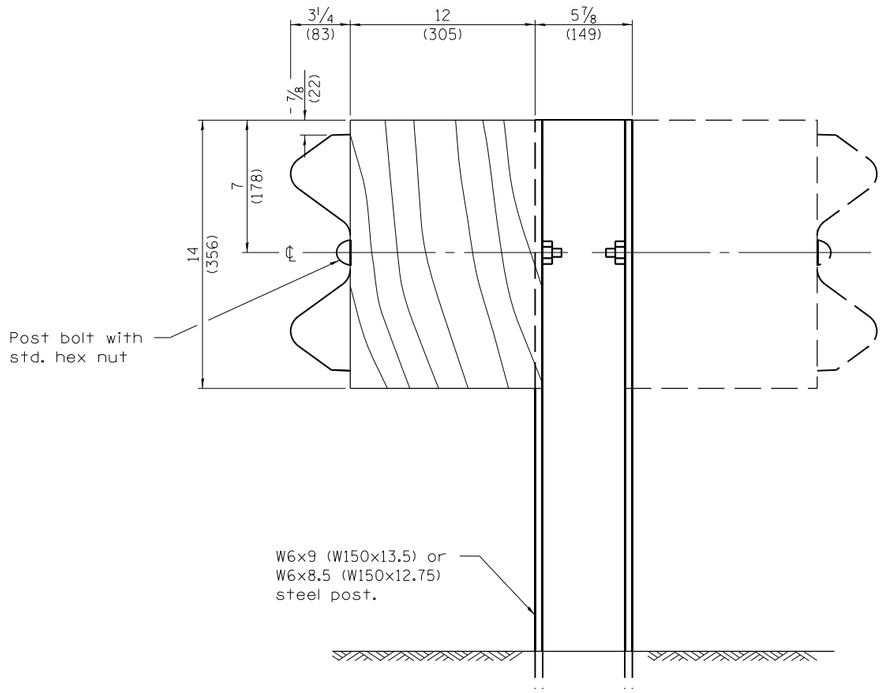

STEEL POST CONSTRUCTION

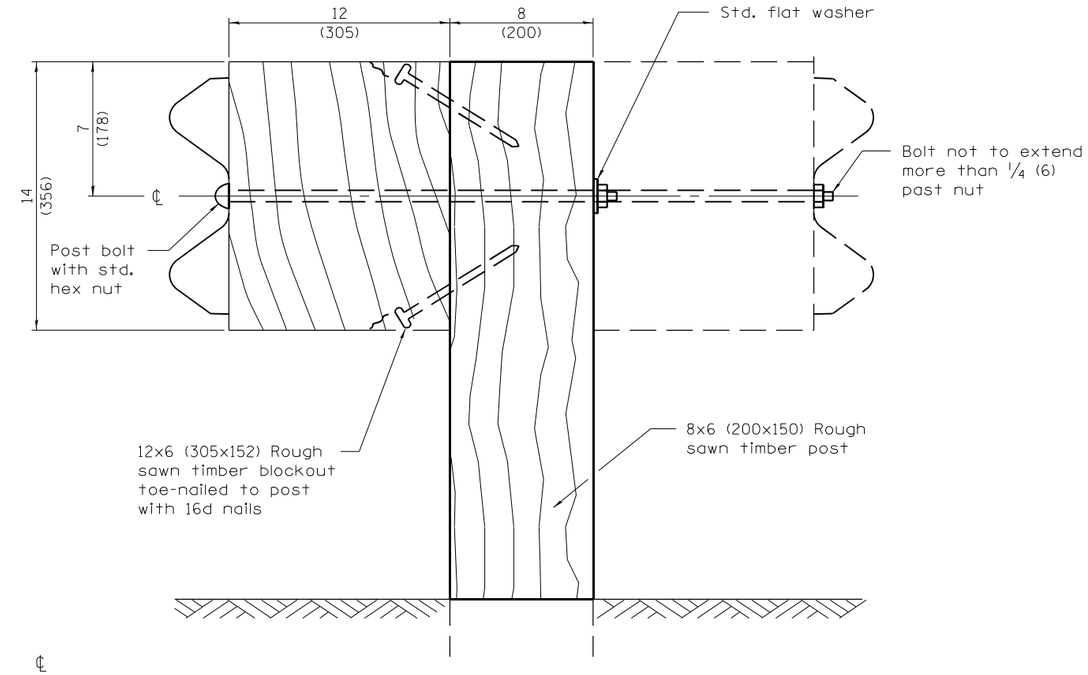

WOOD POST CONSTRUCTION

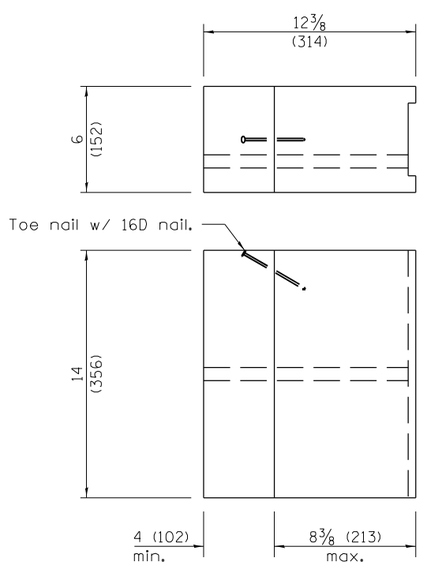

TWO-PIECE WOOD BLOCKOUT OPTION

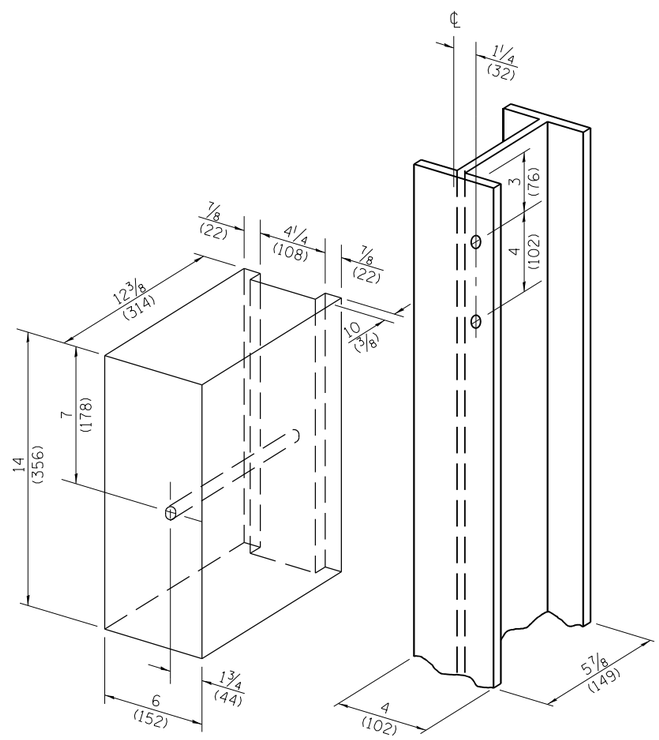

Note:
All holes ¾ (20) dia.

WOOD BLOCK-OUT AND STEEL POST DETAILS

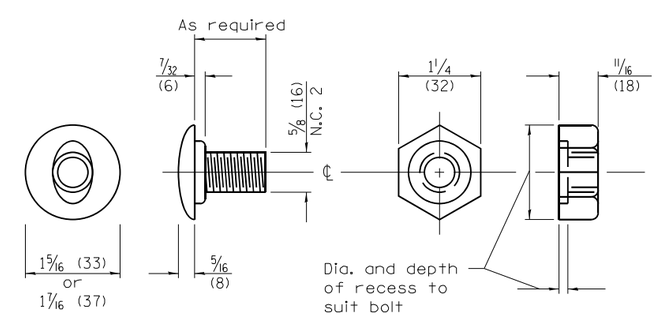

POST OR SPLICE BOLT & NUT

Illinois Department of Transportation

PASSED January 1, 2012
Michael Brand
ENGINEER OF POLICY AND PROCEDURES
APPROVED January 1, 2012
ENGINEER OF DESIGN AND ENVIRONMENT

ISSUED 1-1-97

STEEL PLATE BEAM GUARDRAIL

(Sheet 2 of 4)

STANDARD 630001-10

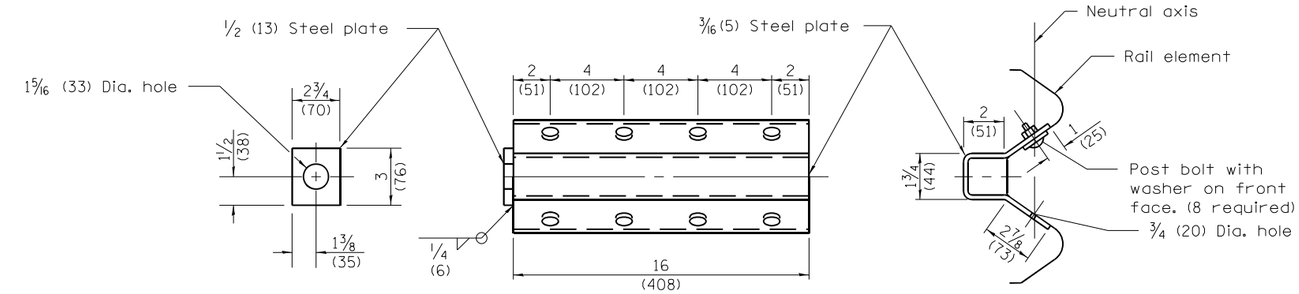

NOTE
Anchor plate T shall be used to attach cable assembly to guardrail when required on traffic barrier terminals.

ANCHOR PLATE T DETAILS

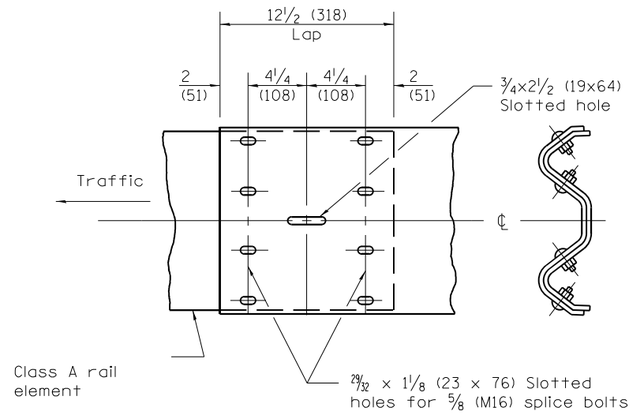

RAIL ELEMENT SPLICE

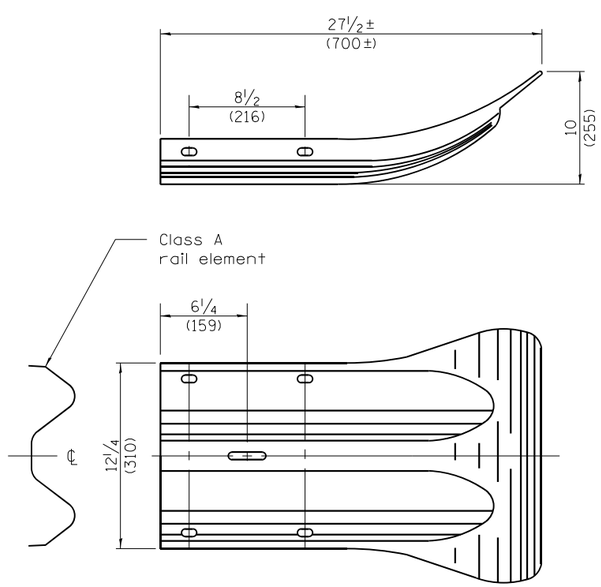

END SECTION

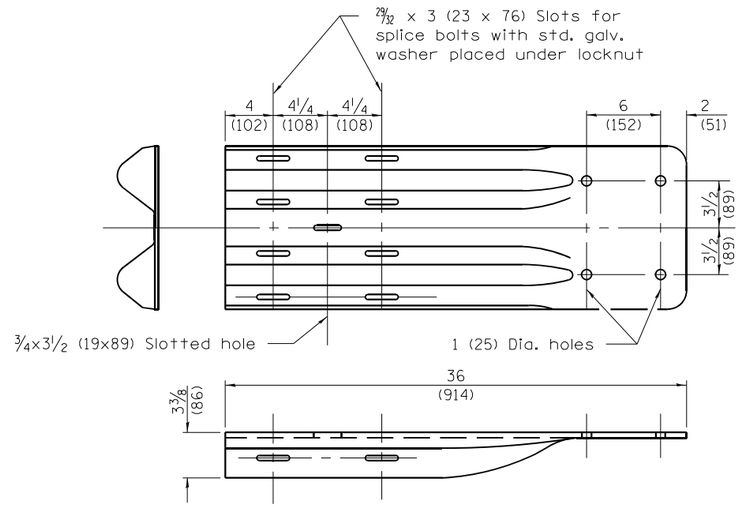

NOTE
When end shoe is attached to a bridge parapet which has an expansion joint, the bolts shall be provided with a locknut or double nut and shall be tightened only to a point that will allow guardrail movement.

The standard end shoe shall be attached to the concrete with pre-drilled or self-drilling anchor bolts. The anchor cone shall be set flush with the surface of the concrete.

Externally threaded studs protruding from the surface of the concrete will not be permitted.

END SHOE

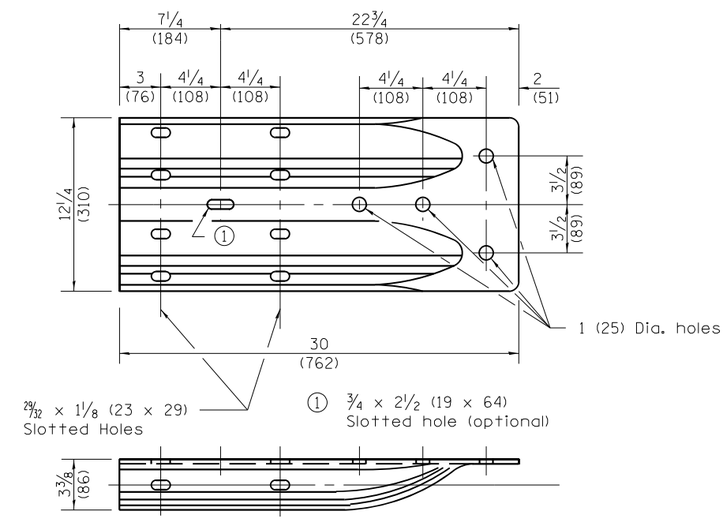

ALTERNATE END SHOE

Illinois Department of Transportation

PASSED January 1, 2012
Michael Brand
ENGINEER OF POLICY AND PROCEDURES
APPROVED January 1, 2012
Scott E. Stokes
ENGINEER OF DESIGN AND ENVIRONMENT

ISSUED 1-1-97

STEEL PLATE BEAM GUARDRAIL

(Sheet 3 of 4)

STANDARD 630001–10

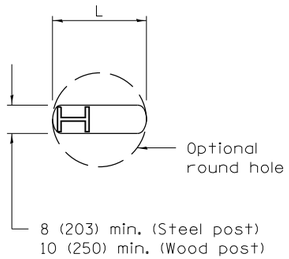

PLAN

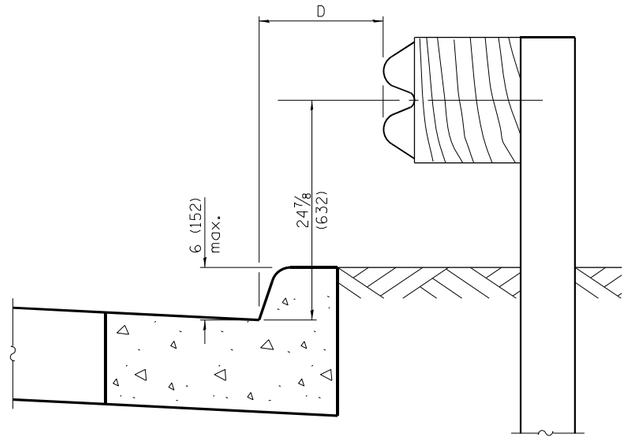

0 ≤ D < 4'–0" (1.2 m)

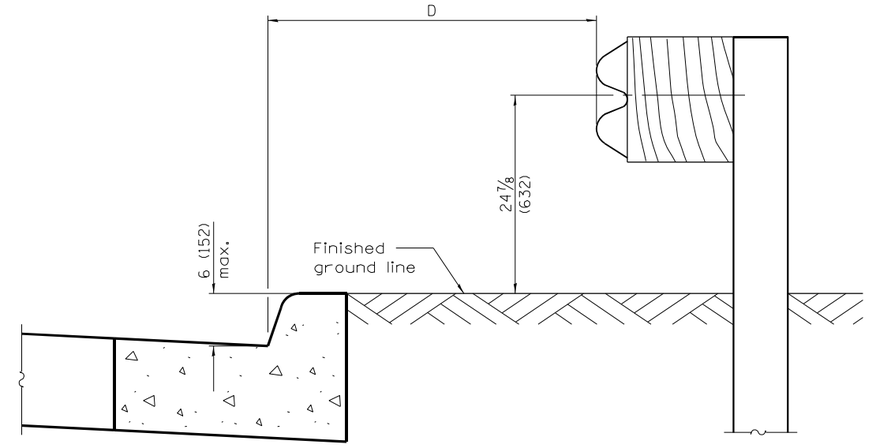

4'–0" (1.2 m) ≤ D ≤ 12'–0" (3.7 m)

GUARDRAIL PLACED BEHIND CURB

Note: 'D' shall not exceed 6 (152) for design speeds greater than 45 mph.

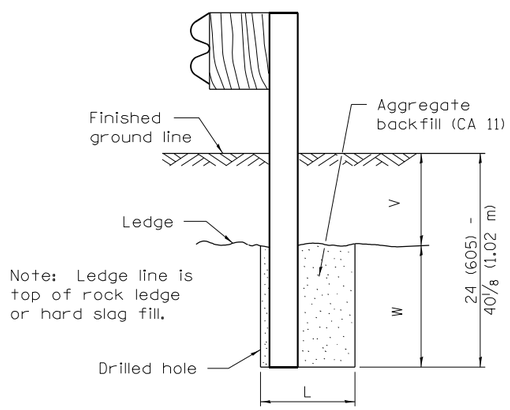

ELEVATION

FOOTING FOR POST WHEN IMPERVIOUS MATERIAL IS ENCOUNTERED

V	W	L	
		Steel Post	Wood Post
0 - 6 (0 - 152)	24 (610)	21 (530)	23 (580)
> 6 - 18 (> 152 - 458)	18 (458)	14 1/2 (368)	16 1/2 (419)
> 18 - 31 (> 458 - 787)	12 (305)	8 (203)	10 (250)
> 31 - 40 1/8 (> 787 - 1.02 m)	12 - 0 (305 - 0)	8 (203)	10 (250)

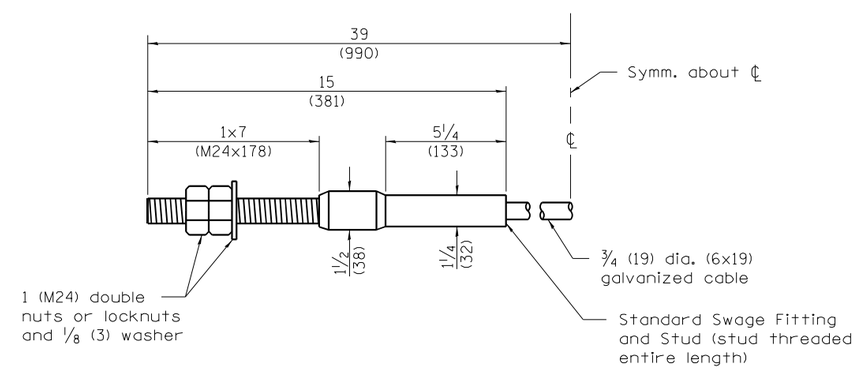

CABLE ASSEMBLY

(40,000 lbs. (18,100 kg) min. breaking strength)
Tighten to taut tension.

Illinois Department of Transportation

PASSED January 1, 2012
Michael Brand
ENGINEER OF POLICY AND PROCEDURES
APPROVED January 1, 2012
Scott Sobaski
ENGINEER OF DESIGN AND ENVIRONMENT

ISSUED 1-1-97

STEEL PLATE BEAM GUARDRAIL

(Sheet 4 of 4)

STANDARD 630001–10

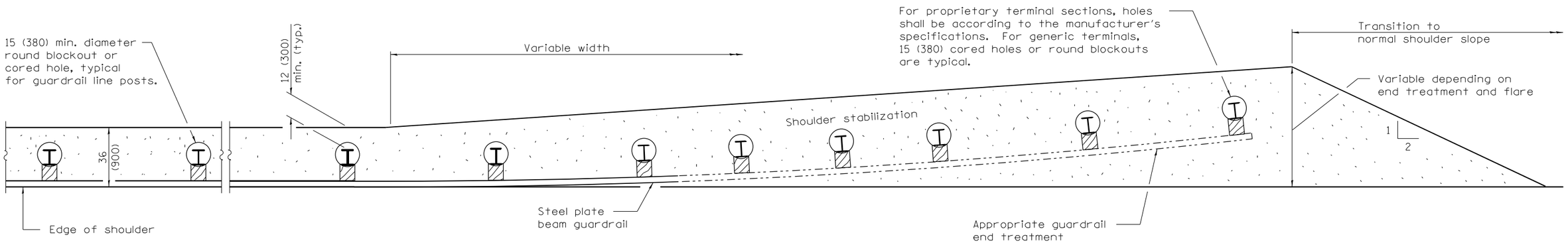

PLAN

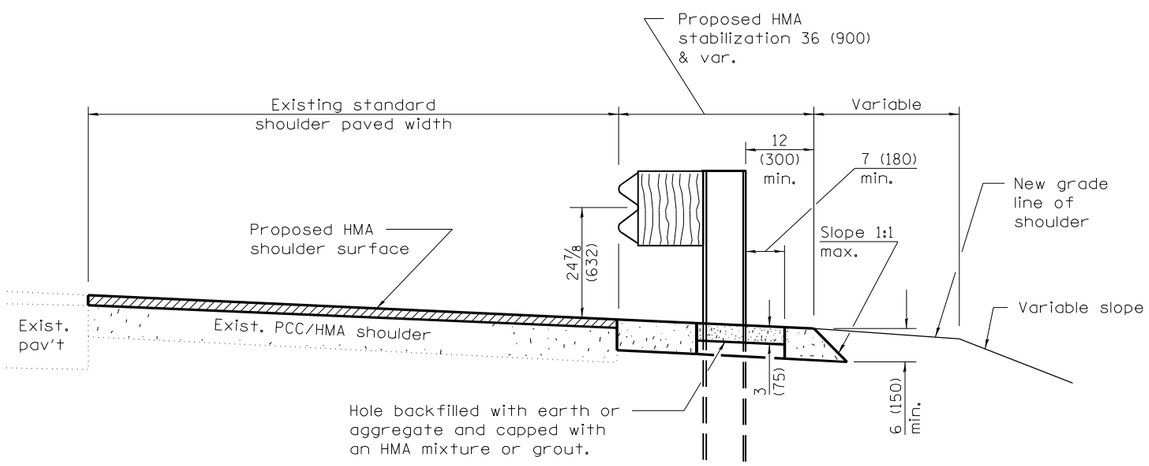

RESURFACING

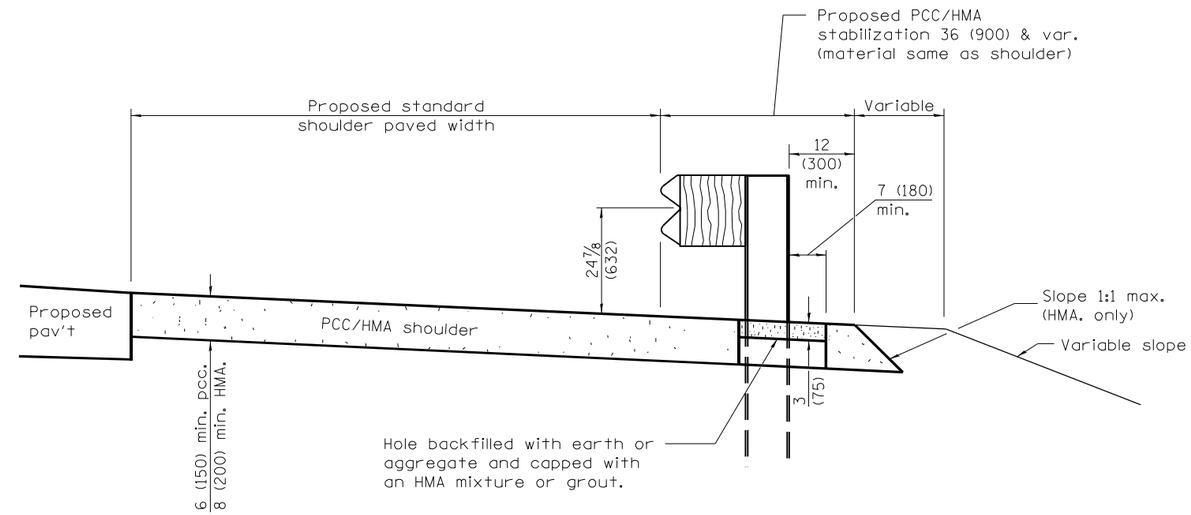

NEW CONSTRUCTION

GENERAL NOTES

See Standard 482001, 482006, or 483001 for details not shown.

All dimensions are in inches (millimeters) unless otherwise shown.

Illinois Department of Transportation

PASSED January 1, 2009
ENGINEER OF POLICY AND PROCEDURES
APPROVED January 1, 2009
ENGINEER OF DESIGN AND ENVIRONMENT

ISSUED 1-1-97

DATE	REVISIONS
1-1-09	Switched units to
	English (metric).
1-1-08	Removed reference to
	"bituminous mixture or
	grout".

PCC / HMA STABILIZATION AT STEEL PLATE BEAM GUARDRAIL

STANDARD 630201–06

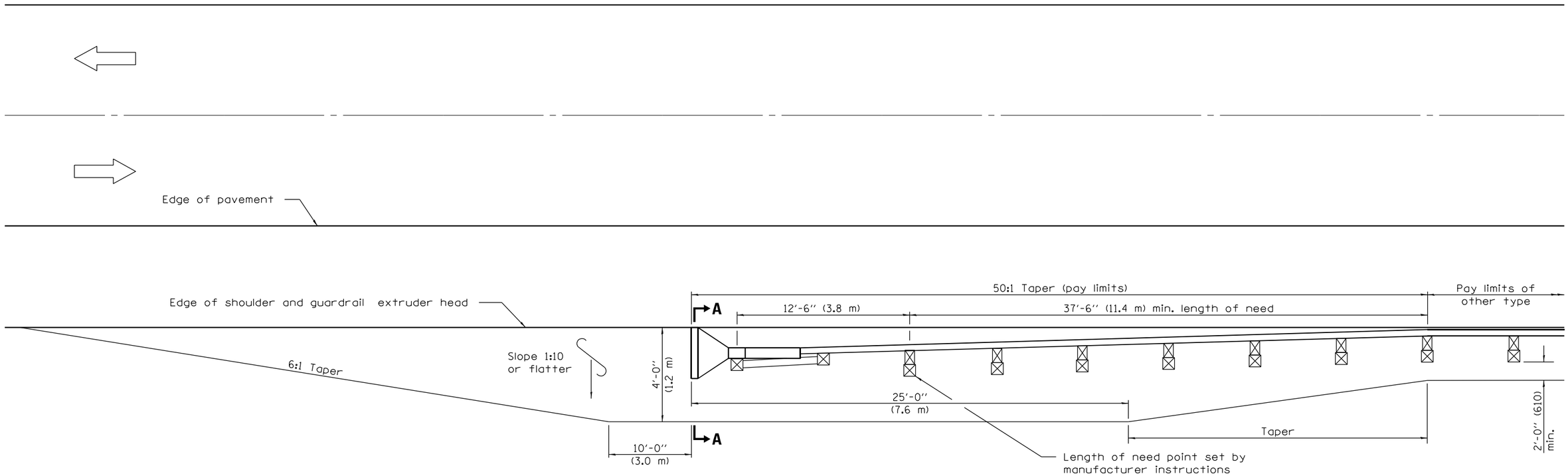

SHOULDER WIDENING TRANSITION FOR TANGENT TERMINAL

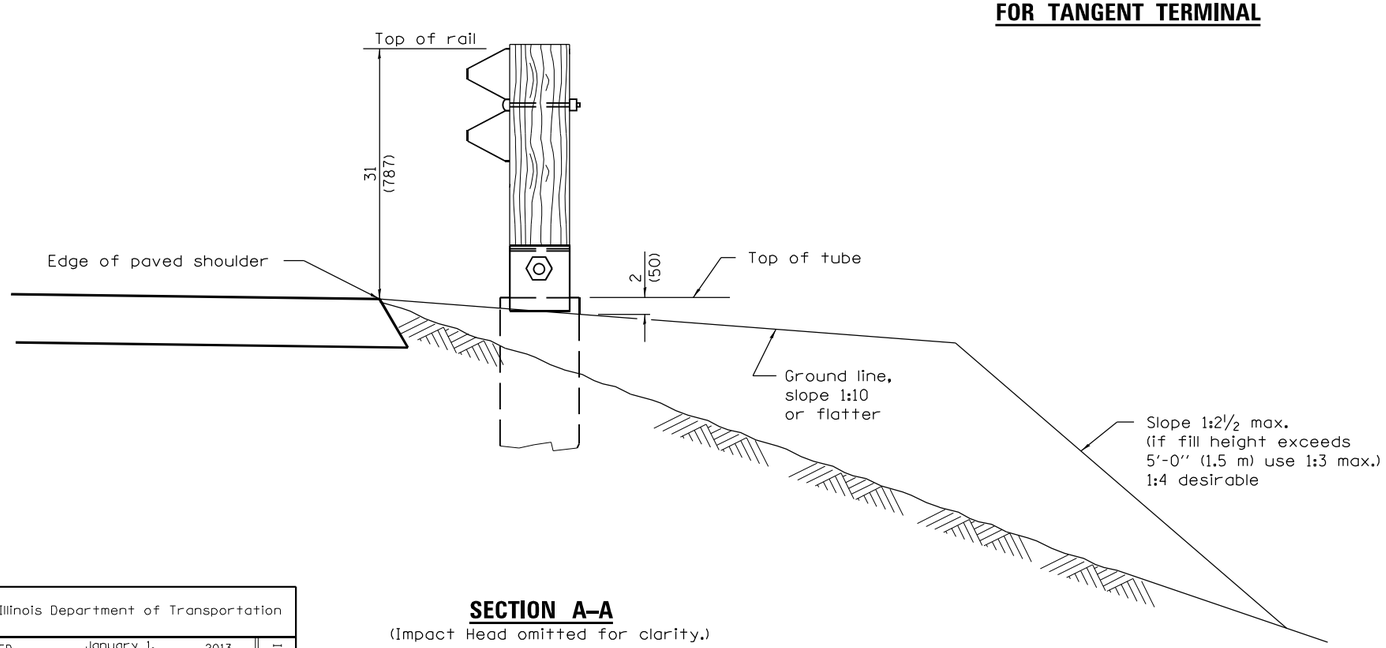

SECTION A–A

(Impact Head omitted for clarity.)

GENERAL NOTES

50:1 Taper required so the guardrail head will not encroach on the shoulder.

All slope ratios are expressed as units of vertical displacement to units of horizontal displacement (V:H).

All dimensions are in inches (millimeters) unless otherwise shown.

Illinois Department of Transportation

PASSED January 1, 2013
Michael Brand
ENGINEER OF POLICY AND PROCEDURES
APPROVED January 1, 2013
ENGINEER OF DESIGN AND ENVIRONMENT

ISSUED 1-1-00

DATE	REVISIONS
1-1-13	Modified dimensioning of terminal.
1-1-09	Switched units to English (metric).

SHOULDER WIDENING FOR TYPE 1 (SPECIAL) GUARDRAIL TERMINALS

(Sheet 1 of 2)

STANDARD 630301–06

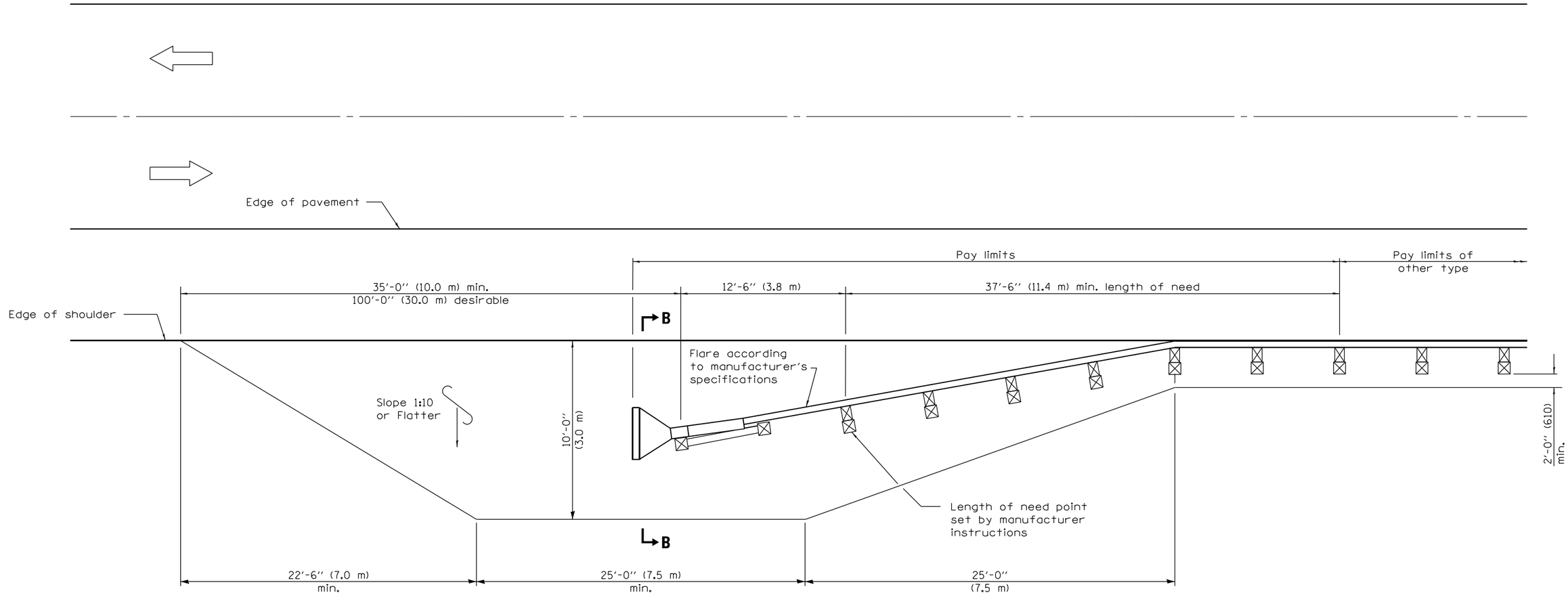

SHOULDER WIDENING TRANSITION FOR FLARED TERMINAL

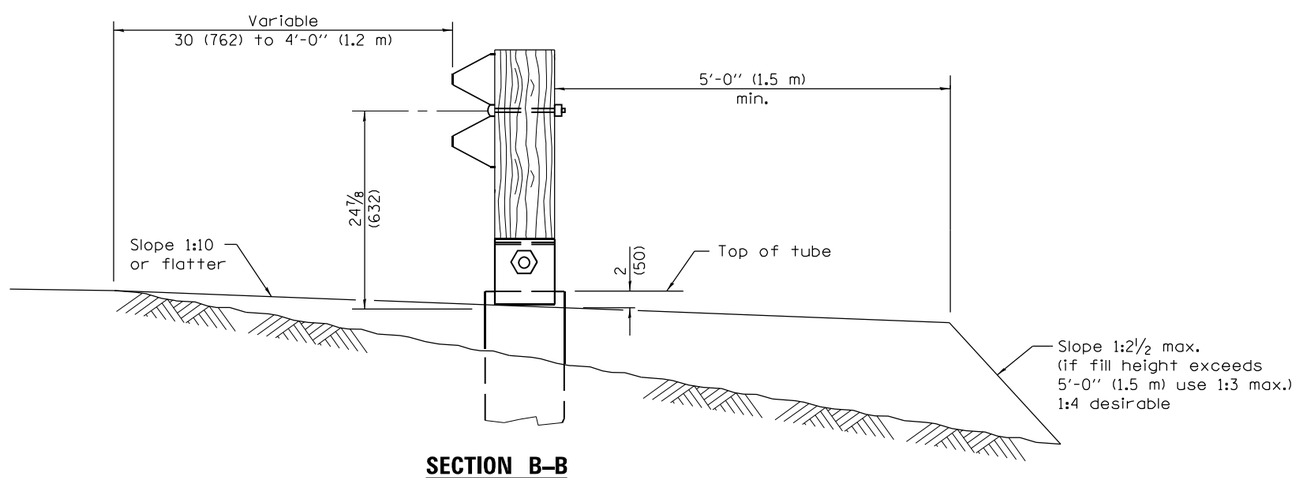

SECTION B–B
(Impact Head omitted for clarity.)

Illinois Department of Transportation

PASSED January 1. 2013
ENGINEER OF POLICY AND PROCEDURES
APPROVED January 1. 2013
ENGINEER OF DESIGN AND ENVIRONMENT

ISSUED 1-1-00

SHOULDER WIDENING FOR TYPE 1 (SPECIAL) GUARDRAIL TERMINALS

(Sheet 2 of 2)

STANDARD 630301–06

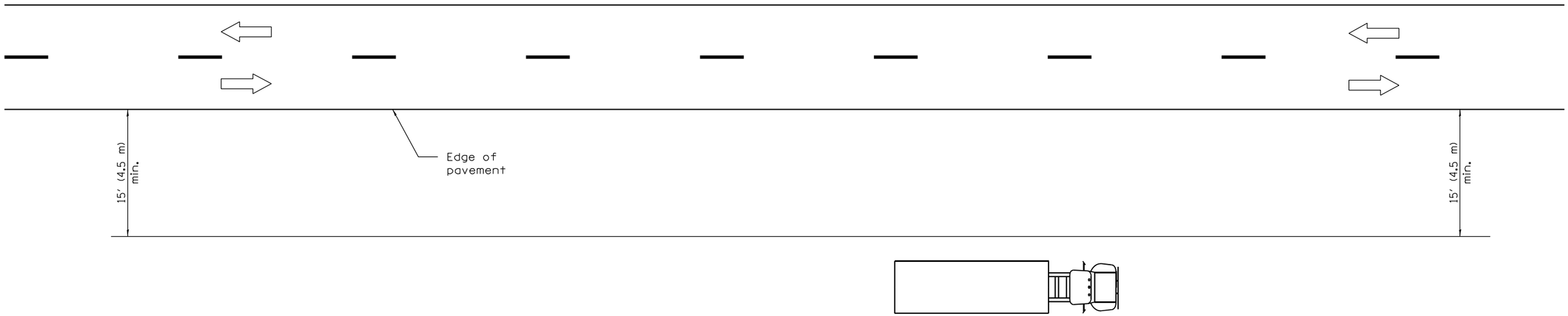

TYPICAL APPLICATIONS

Landscaping work

Utility work

Fencing contracts and maintenance

Cleaning culverts

GENERAL NOTES

This Standard is used where at all times all vehicles, equipment, workers or their activities are more than 15′ (4.5 m) from the edge of pavement.

When the work operation requires that two or more work vehicles cross the 15′ (4.5 m) clear zone in any one hour, traffic control shall be according to Standard 701006.

All dimensions are in inches (millimeters) unless otherwise shown.

Illinois Department of Transportation

APPROVED January 1, 2009
ENGINEER OF OPERATIONS

APPROVED January 1, 2009
ENGINEER OF DESIGN AND ENVIRONMENT

ISSUED 1-1-97

DATE	REVISIONS
1-1-09	Switched units to
	English (metric).
1-1-05	Revised title and notes.

OFF–RD OPERATIONS, 2L, 2W, MORE THAN 15′ (4.5 m) AWAY

STANDARD 701001–02

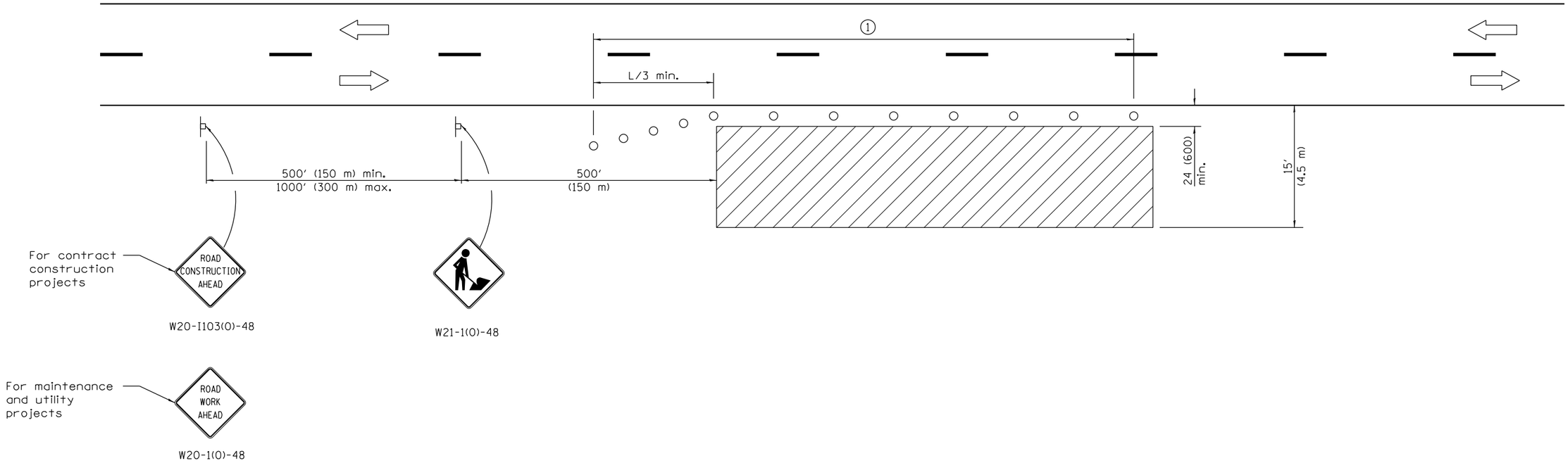

TYPICAL APPLICATIONS

Utility operations
Culvert extensions
Side slope changes
Guardrail installation and maintenance
Delineator installation
Landscaping operations
Shoulder repair
Sign installation and maintenance

SYMBOLS

Work area

Sign

Cone, drum or barricade

(1) When the work operation exceeds one hour, cones, drums or barricades shall be placed at 25′ (8 m) centers for L/3 distance, and at 50′ (15 m) centers through the remainder of the work area.

GENERAL NOTES

This Standard is used where any vehicles, equipment, workers or their activities will encroach in the area 15′ (4.5 m) to 24 (600) from the edge of pavement.

Calculate L as follows:

SPEED LIMIT	FORMULAS English	FORMULAS (Metric)
40 mph (70 km/h) or less:	$L = \frac{WS^2}{60}$	$L = \frac{WS^2}{150}$
45 mph (80 km/h) or greater:	L=(W)(S)	L=0.65(W)(S)

W = Width of offset in feet (meters).

S = Normal posted speed mph (km/h).

All dimensions are in inches (millimeters) unless otherwise shown.

Illinois Department of Transportation

APPROVED January 1, 2014
ENGINEER OF SAFETY ENGINEERING

APPROVED January 1, 2014
ENGINEER OF DESIGN AND ENVIRONMENT

ISSUED 1-1-97

DATE	REVISIONS
1-1-14	Revised workers sign
	number to agree with
	current MUTCD.
1-1-13	Omitted text 'WORKERS'
	sign.

OFF–RD OPERATIONS, 2L, 2W, 15′ (4.5 m) TO 24″ (600 mm) FROM PAVEMENT EDGE

STANDARD 701006–05

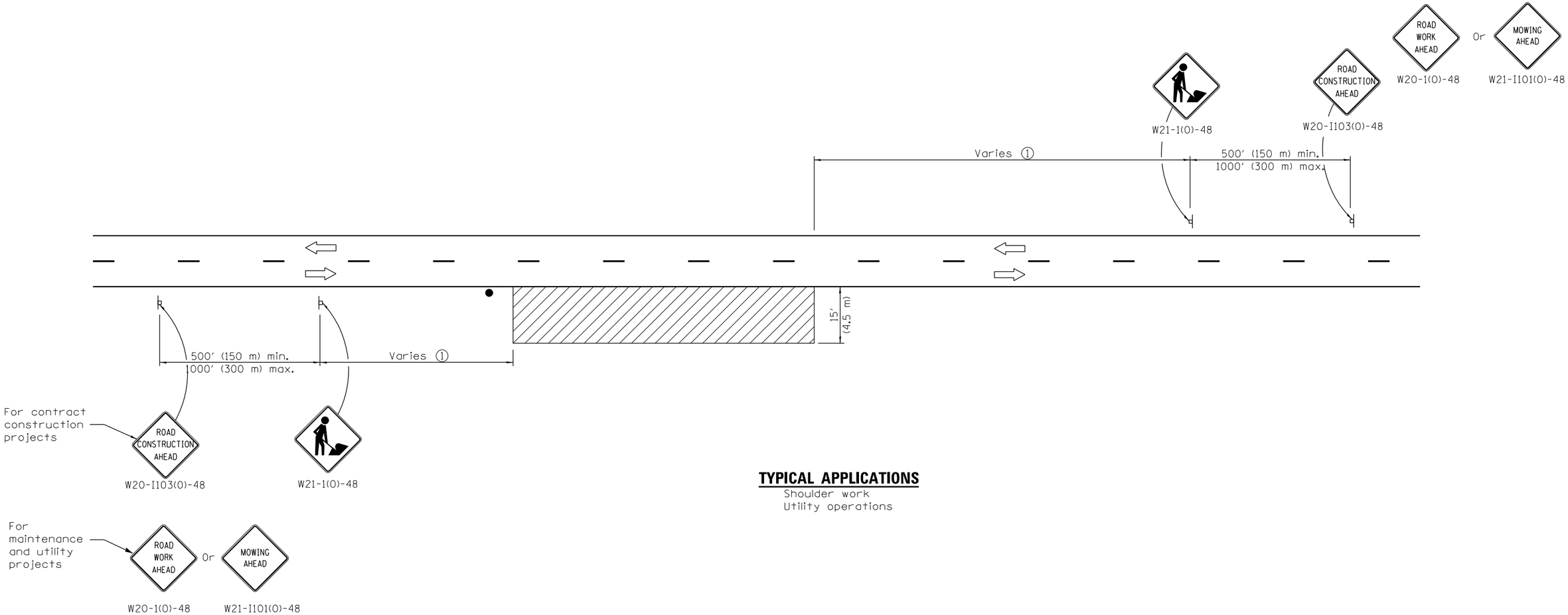

TYPICAL APPLICATIONS

Shoulder work
Utility operations

① Minimum distance is 200′ (60 m). Maximum distance to be determined by the Engineer but should not exceed ½ the length required for one normal working day's operation, or 4 miles (6.4 km) whichever is less.

GENERAL NOTES

This Standard is used where at any time, any vehicle, equipment, workers or their activities require an intermittent or continuous moving operation on the shoulder, where the average speed is 1 mph (2 km/h) or less.

When the work operation does not exceed 60 minutes, traffic control may be according to Standard 701301.

All dimensions are in inches (millimeters) unless otherwise shown.

SYMBOLS

Work area

Sign

Flagger with traffic control sign when required

Illinois Department of Transportation

APPROVED January 1, 2014
ENGINEER OF SAFETY ENGINEERING

APPROVED January 1, 2014
ENGINEER OF DESIGN AND ENVIRONMENT

ISSUED 1-1-97

DATE	REVISIONS
1-1-14	Revised workers sign
	number to agree with
	current MUTCD.
1-1-13	Omitted text 'WORKERS'
	sign.

OFF–RD MOVING OPERATIONS, 2L, 2W, DAY ONLY

STANDARD 701011–04

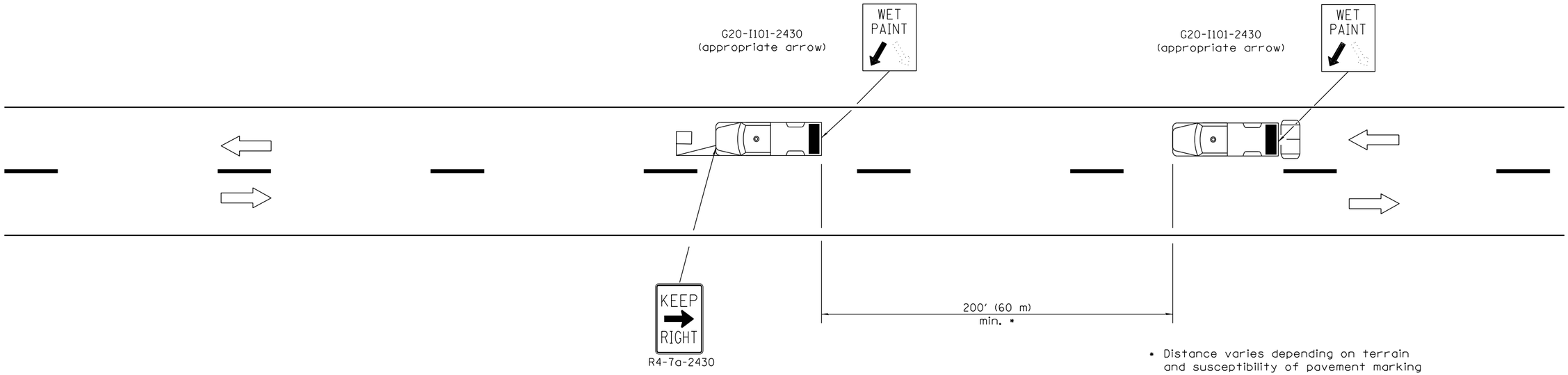

* Distance varies depending on terrain and susceptibility of pavement marking or crack sealant to wheel tracking.

TYPICAL APPLICATIONS

Landscaping work
Utility work
Pavement marking
Weed spraying
Roadometer measurements
Debris cleanup
Crack pouring

SYMBOLS

Arrow board (Hazard Mode only)

Truck with headlights, emergency flashers and flashing amber light. (visible from all directions)

18x18 (450x450) min. orange flag (use when guide wheel is used)

Truck mounted attenuator

GENERAL NOTES

This Standard is used where any vehicle, equipment, workers or their activities will require a continuous moving operation where the average speed is greater than 3 mph (5 km/h).

For shoulder operations not encroaching on the pavement, use DETAIL A, Standard 701426.

All dimensions are in inches (millimeters) unless otherwise shown.

Illinois Department of Transportation

APPROVED January 1, 2009
ENGINEER OF OPERATIONS

APPROVED January 1, 2009
ENGINEER OF DESIGN AND ENVIRONMENT

ISSUED 1-1-97

DATE	REVISIONS
1-1-09	Switched units to
	English (metric). Omitted
	Pass With Care sign.
1-1-00	Elim. speed restrictions
	in Standard title.

LANE CLOSURE 2L, 2W MOVING OPERATIONS–DAY ONLY

STANDARD 701311–03

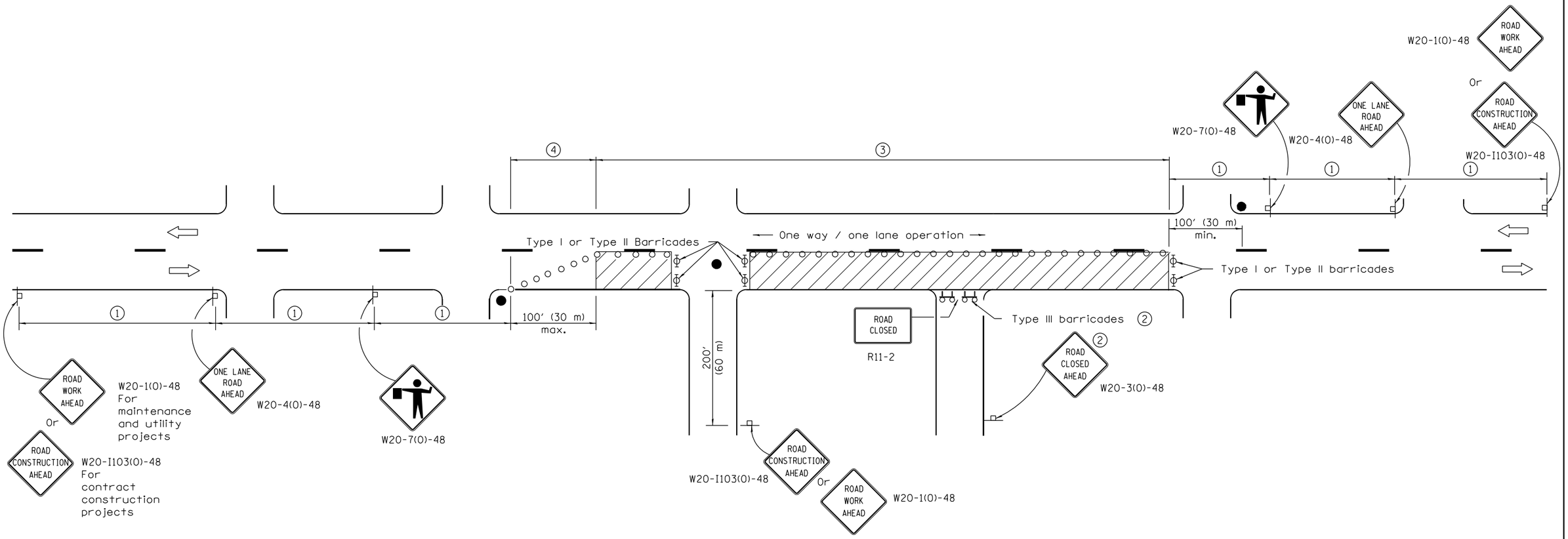

SIGN SPACING	
Posted Speed	Sign Spacing
55	500′ (150 m)
50-45	350′ (100 m)
<45	200′ (60 m)

SYMBOLS

- Work area
- Cone, drum or barricade (not required for moving operations)
- Sign on portable or permanent support
- Flagger with traffic control sign
- Barricade or drum with flashing light
- Type III barricade with flashing lights

1. Refer to SIGN SPACING TABLE for distances.
2. For approved sideroad closures.
3. Cones at 25′ (8 m) centers for 250′ (75 m). Additional cones may be placed at 50′ (15 m) centers. When drums or Type I or Type II barricades are used. the interval between devices may be doubled.
4. Cones, drums or barricades at 20′ (6 m) centers.

GENERAL NOTES

This Standard is used where at any time, day or night, any vehicle, equipment, workers or their activities encroach on the pavement requiring the closure of one traffic lane in an urban area.

All dimensions are in inches (millimeters) unless otherwise shown.

Illinois Department of Transportation

APPROVED January 1, 2011
ENGINEER OF SAFETY ENGINEERING
APPROVED January 1, 2011
ENGINEER OF DESIGN AND ENVIRONMENT

ISSUED 1-1-97

DATE	REVISIONS
1-1-11	Revised flagger sign.
1-1-09	Switched units to
	English (metric).
	Corrected sign No.'s.

URBAN LANE CLOSURE, 2L, 2W, UNDIVIDED

STANDARD 701501–06

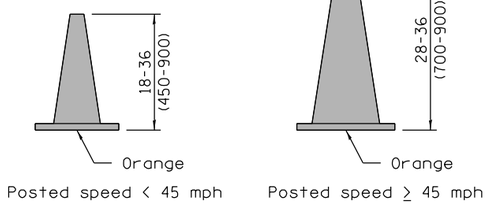

CONE FOR DAYTIME

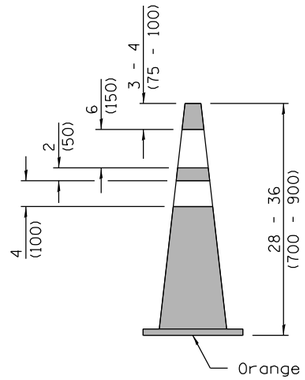

REFLECTORIZED CONE FOR NIGHTTIME

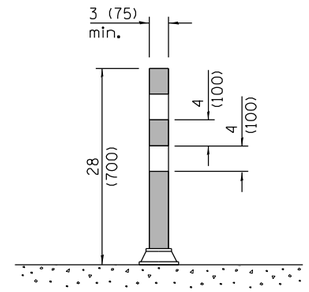

FLEXIBLE DELINEATOR

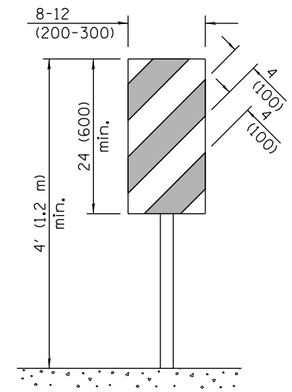

VERTICAL PANEL
POST MOUNTED

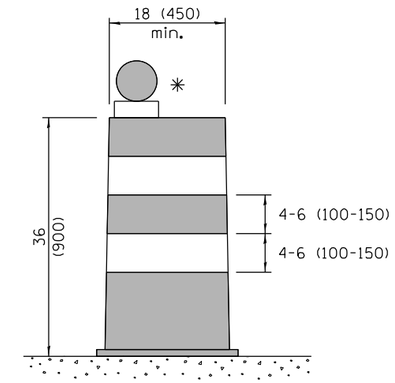

DRUM

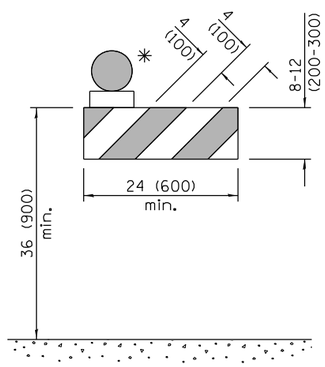

TYPE I BARRICADE

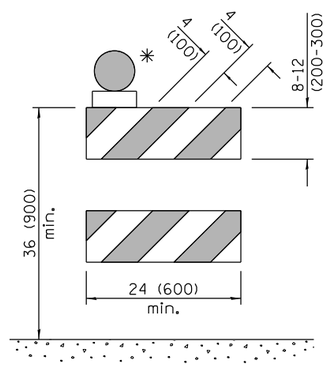

TYPE II BARRICADE

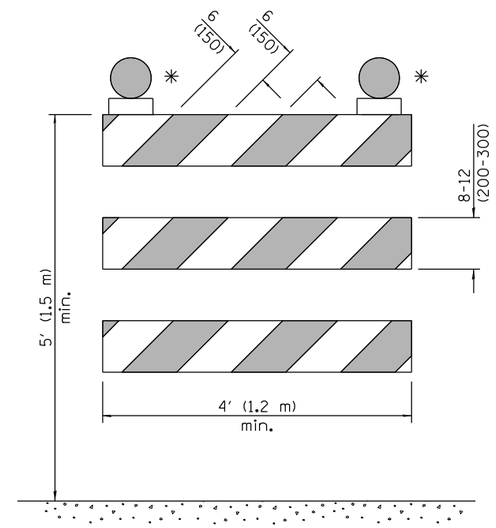

TYPE III BARRICADE

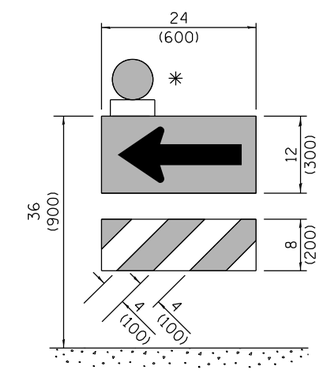

DIRECTION INDICATOR BARRICADE

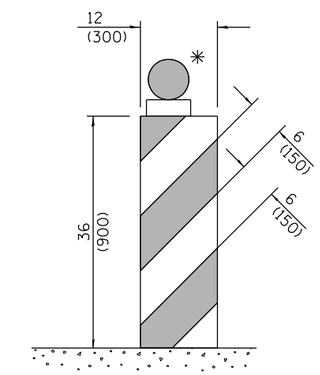

VERTICAL BARRICADE

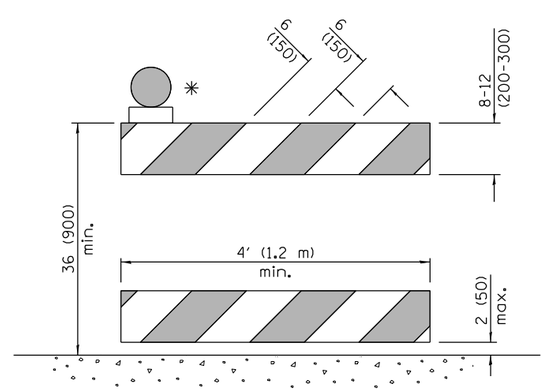

DETECTABLE PEDESTRIAN CHANNELIZING BARRICADE

✳ Warning lights (if required)

GENERAL NOTES

All heights shown shall be measured above the pavement surface.

All dimensions are in inches (millimeters) unless otherwise shown.

Illinois Department of Transportation

APPROVED April 1, 2016
ENGINEER OF OPERATIONS
APPROVED April 1, 2016
ENGINEER OF DESIGN AND ENVIRONMENT

ISSUED 1-1-97

DATE	REVISIONS
4-1-16	Add dim's to barricades. Rev.
	note for post mnt. signs.
	Rev. cone dtls. Add W12-I103.
1-1-15	Revised two sign numbers on
	sheet 2. Added note reg.
	PHOTO ENFORCED plaque.

TRAFFIC CONTROL DEVICES

(Sheet 1 of 3)

STANDARD 701901–05

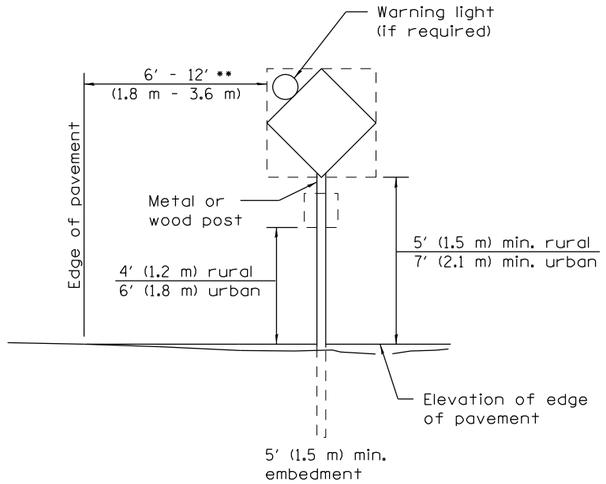

POST MOUNTED SIGNS

** When curb or paved shoulder are present this dimension shall be 24 (600) to the face of curb or 6′ (1.8 m) to the outside edge of the paved shoulder.

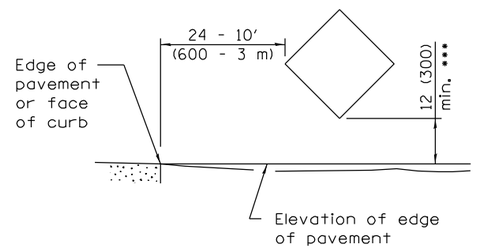

SIGNS ON TEMPORARY SUPPORTS

*** When work operations exceed four days, this dimension shall be 5′ (1.5 m) min. If located behind other devices, the height shall be sufficient to be seen completely above the devices.

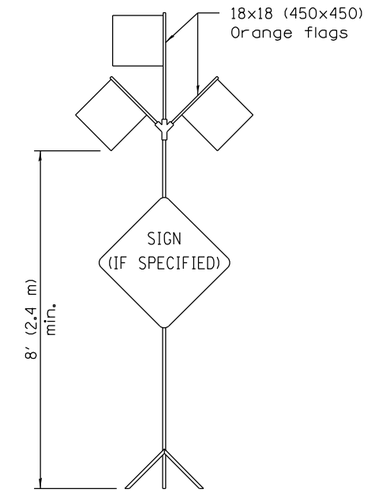

HIGH LEVEL WARNING DEVICE

G20-I104(0)-6036 G20-I105(0)-6024

This signing is required for all projects 2 miles (3200 m) or more in length.

ROAD CONSTRUCTION NEXT X MILES sign shall be placed 500′ (150 m) in advance of project limits.

END CONSTRUCTION sign shall be erected at the end of the job unless another job is within 2 miles (3200 m).

Dual sign displays shall be utilized on multi-lane highways.

WORK LIMIT SIGNING

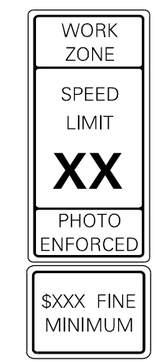

W21-III5(0)-3618

R2-1-3648

R10-I108p-3618 ****

R2-I106p-3618

Sign assembly as shown on Standards or as allowed by District Operations.

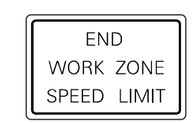

G20-I103(0)-6036

This sign shall be used when the above sign assembly is used.

HIGHWAY CONSTRUCTION SPEED ZONE SIGNS

**** R10-I108p shall only be used along roadways under the juristiction of the State.

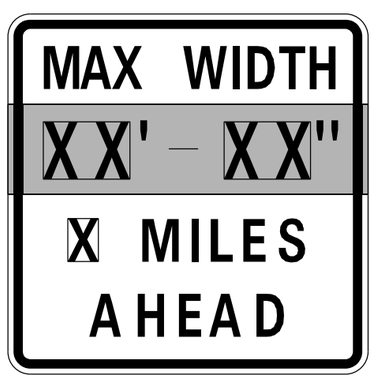

W12-I103-4848

WIDTH RESTRICTION SIGN

XX′-XX″ width and X miles are variable.

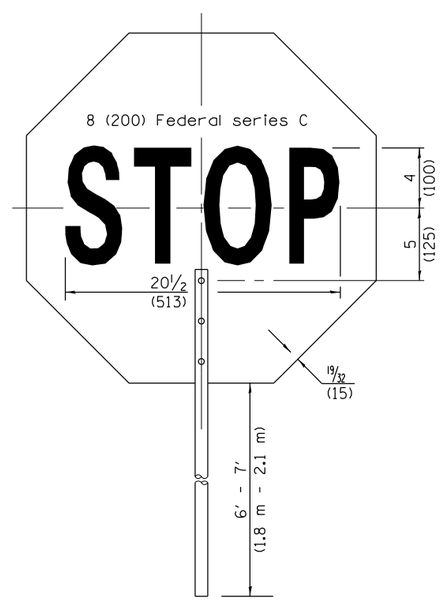

FRONT SIDE

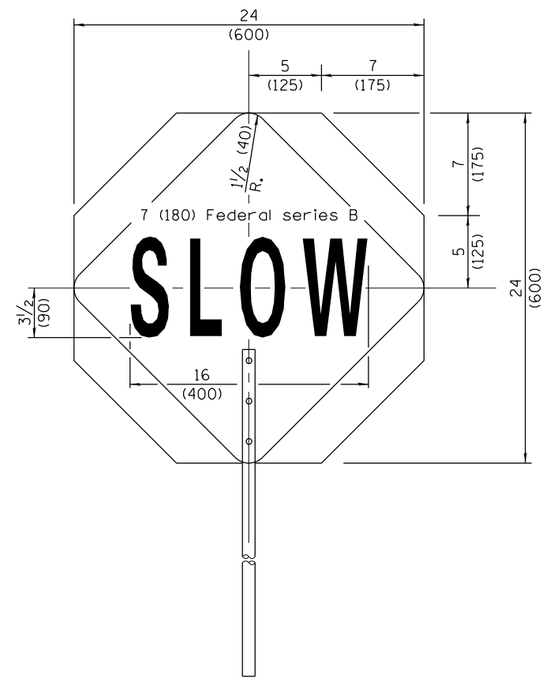

REVERSE SIDE

FLAGGER TRAFFIC CONTROL SIGN

Illinois Department of Transportation

APPROVED April 1, 2016
ENGINEER OF OPERATIONS

APPROVED April 1, 2016
ENGINEER OF DESIGN AND ENVIRONMENT

ISSUED 1-1-97

TRAFFIC CONTROL DEVICES

(Sheet 2 of 3)

STANDARD 701901–05

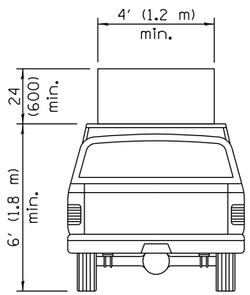

TYPE A ROOF MOUNTED

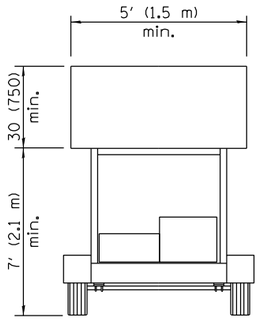

TYPE B ROOF OR TRAILER MOUNTED

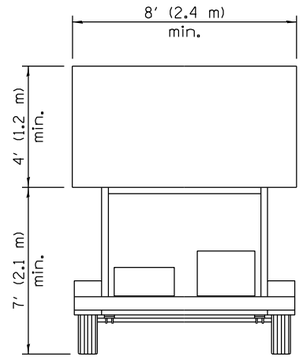

TYPE C TRAILER MOUNTED

ARROW BOARDS

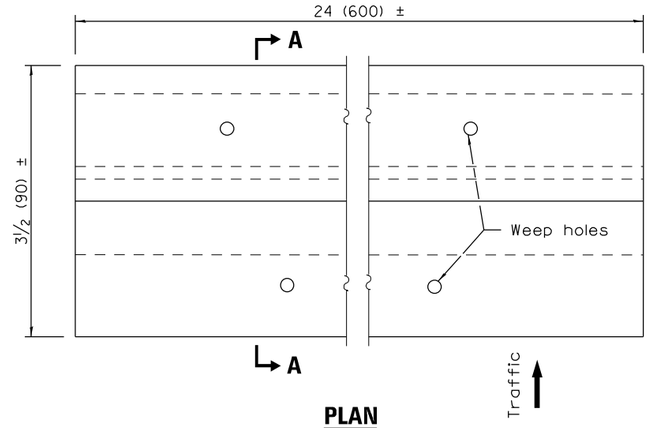

PLAN

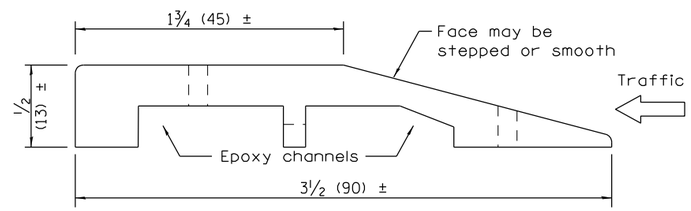

SECTION A–A

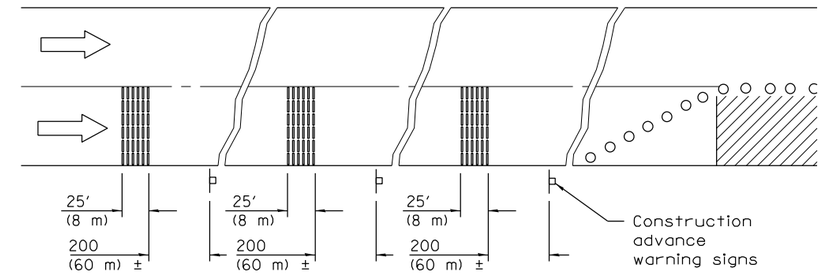

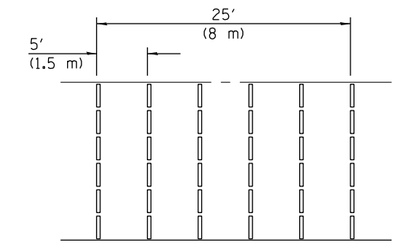

TYPICAL INSTALLATION

TEMPORARY RUMBLE STRIPS

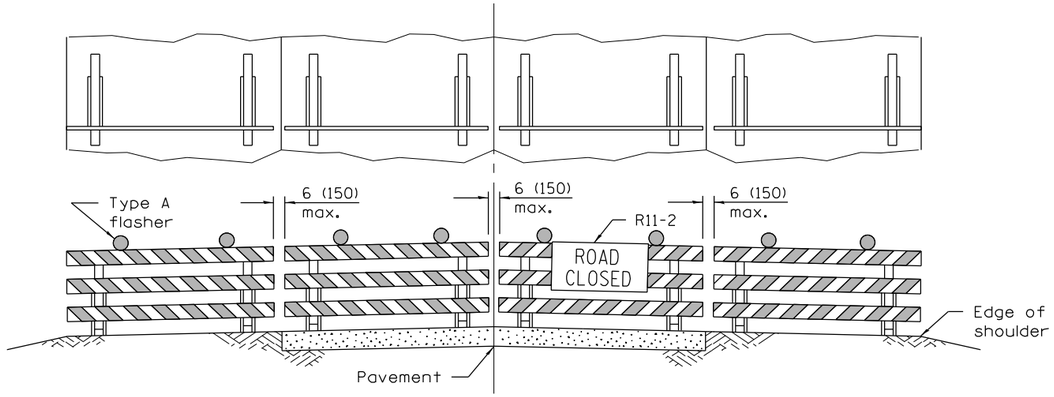

ROAD CLOSED TO ALL TRAFFIC

Reflectorized striping may be omitted on the back side of the barricades. If a Type III barricade with an attached sign panel which meets NCHRP 350 is not available, the sign may be mounted on an NCHRP 350 temporary sign support directly in front of the barricade.

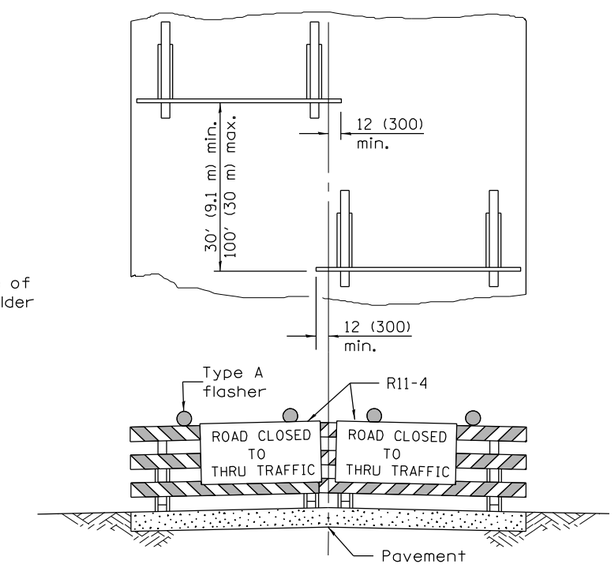

ROAD CLOSED TO THRU TRAFFIC

Reflectorized striping shall appear on both sides of the barricades. If a Type III barricade with an attached sign panel which meets NCHRP 350 is not available, the signs may be mounted on NCHRP 350 temporary sign supports directly in front of the barricade.

TYPICAL APPLICATIONS OF TYPE III BARRICADES CLOSING A ROAD

Illinois Department of Transportation

APPROVED April 1, 2016
ENGINEER OF OPERATIONS

APPROVED April 1, 2016
ENGINEER OF DESIGN AND ENVIRONMENT

ISSUED 1-1-97

TRAFFIC CONTROL DEVICES

(Sheet 3 of 3)

STANDARD 701901–05

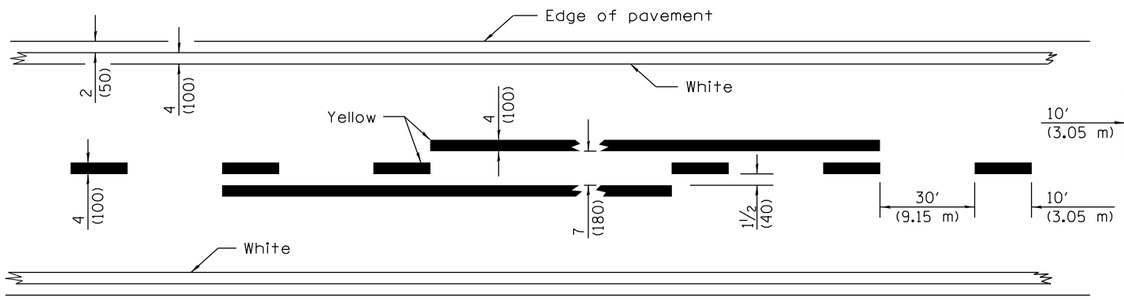

2 LANE

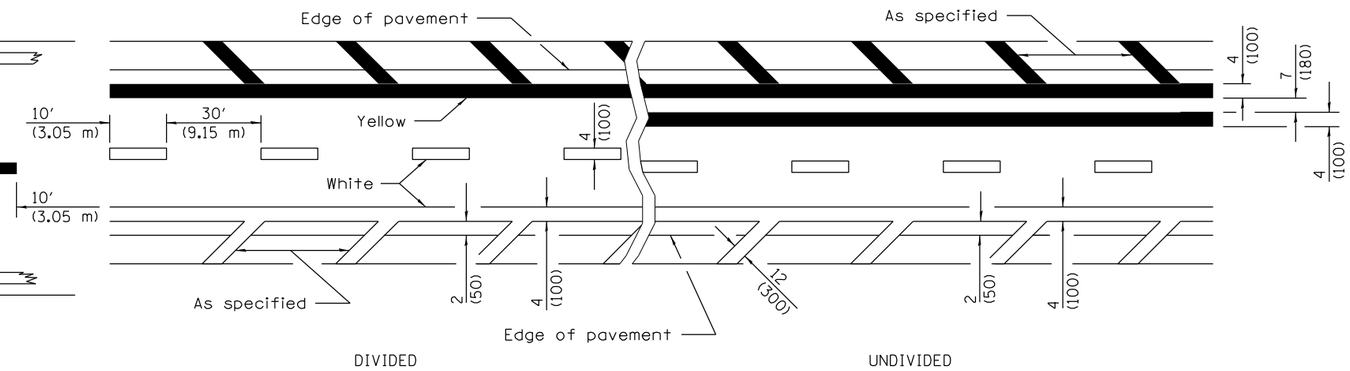

MULTI LANE

LANE AND EDGE LINES

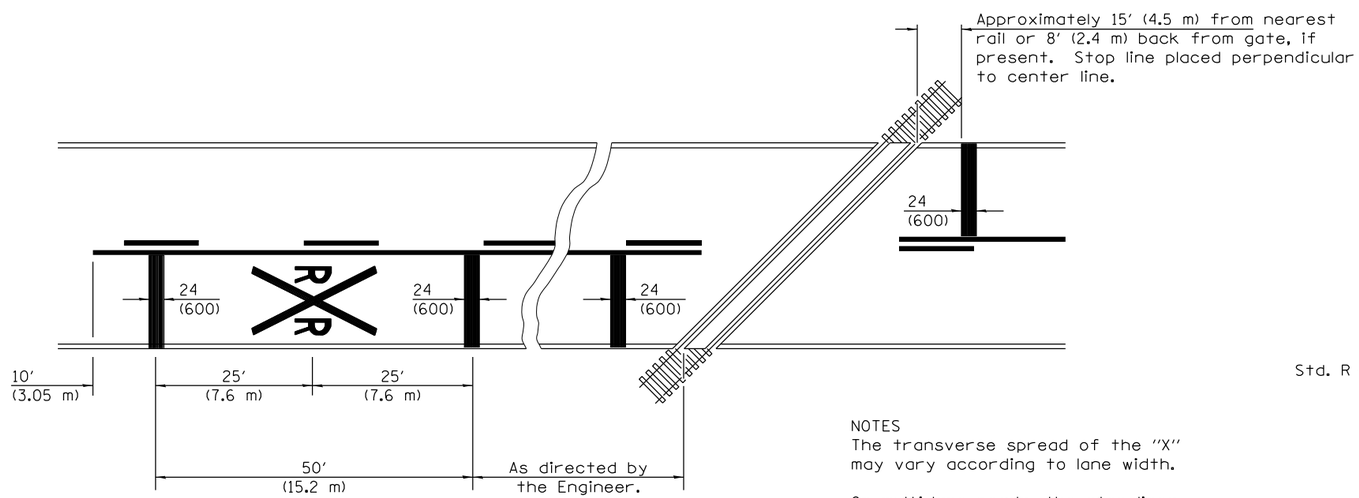

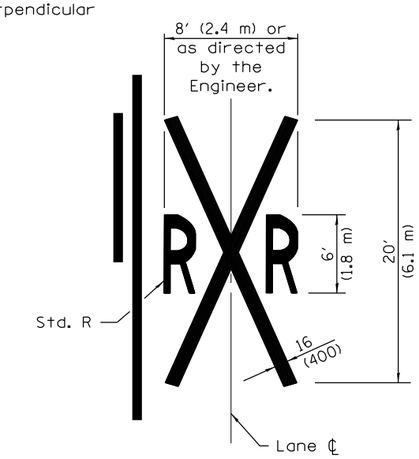

NOTES
The transverse spread of the "X" may vary according to lane width.

On multi-lane roads, the stop lines shall extend across all approach lanes and separate RXR symbols shall be placed adjacent to each other in each lane.

When the pavement marking symbol is used, a portion of the symbol should be located directly adjacent to the Advance Warning Sign (W10-1) as placed by Table 2C-4, Condition B of the MUTCD.

PAVEMENT MARKINGS AT RAILROAD–HIGHWAY GRADE CROSSING

All dimensions are in inches (millimeters) unless otherwise shown.

Illinois Department of Transportation

APPROVED January 1, 2015
ENGINEER OF OPERATIONS
APPROVED January 1, 2015
ENGINEER OF DESIGN AND ENVIRONMENT

ISSUED 1-1-97

DATE	REVISIONS
1-1-15	Added symbols. Revised
	bike symbol. Revised note
	for stop line at RR crossing.
1-1-14	Added bike symbol. Renamed
	'LANE DROP ARROW' detail to
	'LANE-REDUCTION ARROW'.

TYPICAL PAVEMENT MARKINGS

(Sheet 1 of 3)

STANDARD 780001–05

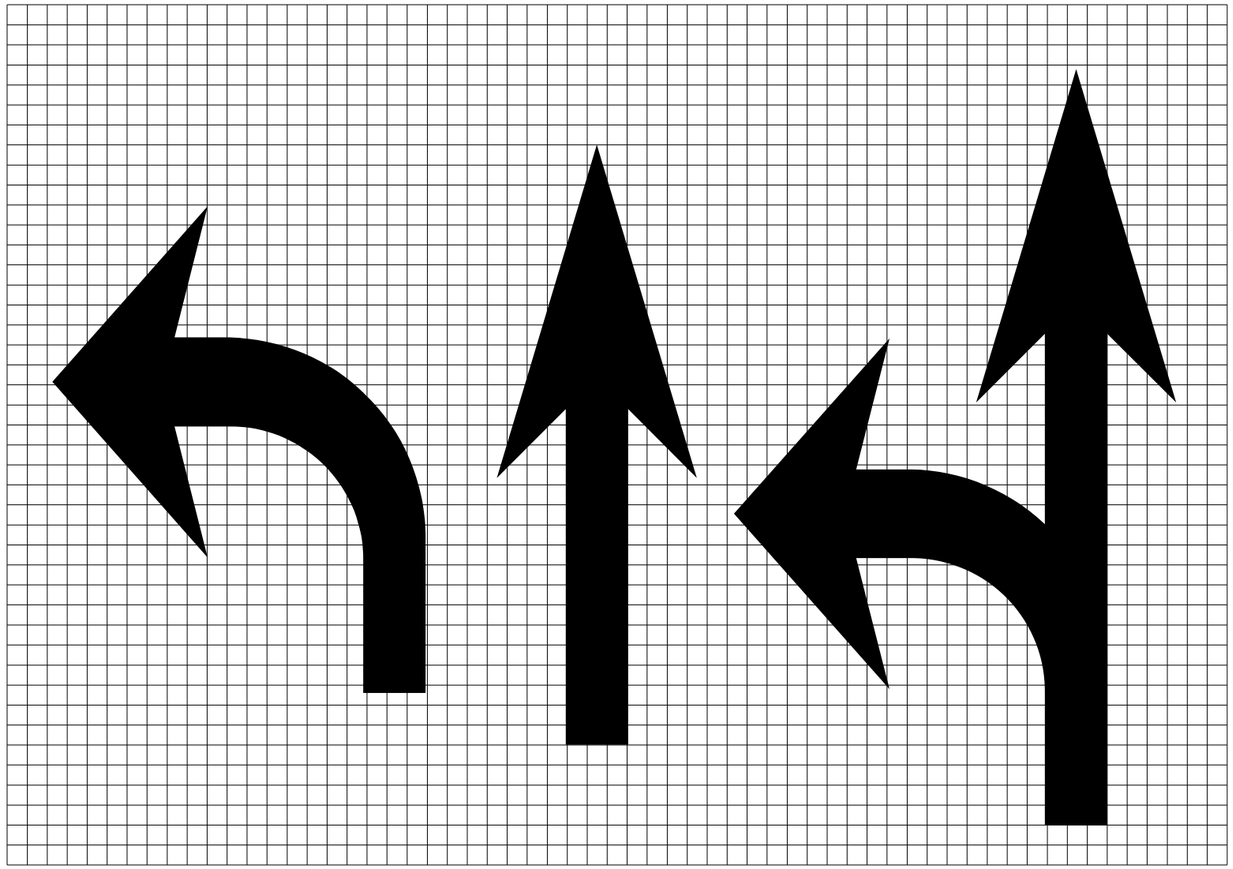

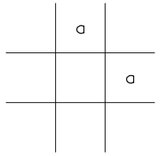

Legend Height	Arrow Size	a
6′ (1.8 m)	Small	2.9 (74)
8′ (2.4 m)	Large	3.8 (96)

The space between adjacent letters or numerals should be approximately 3 (75) for 6′ (1.8 m) legend and 4 (100) for 8′ (2.4 m) legend.

LETTER AND ARROW GRID SCALE

Illinois Department of Transportation

APPROVED January 1, 2015
ENGINEER OF OPERATIONS
APPROVED January 1, 2015
ENGINEER OF DESIGN AND ENVIRONMENT

ISSUED 1-1-97

TYPICAL PAVEMENT MARKINGS

(Sheet 2 of 3)

STANDARD 780001–05

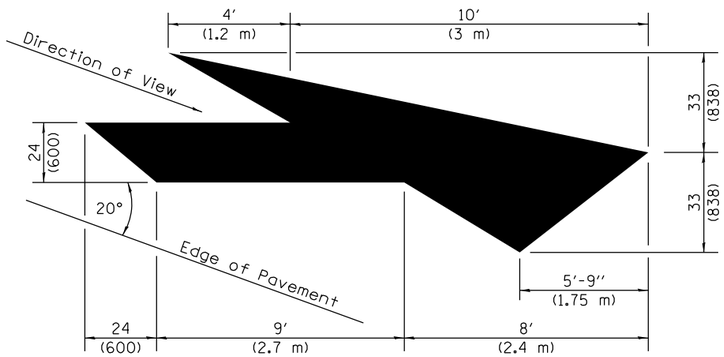

LANE–REDUCTION ARROW

Right lane-reduction arrow shown.
Use mirror image for left lane.

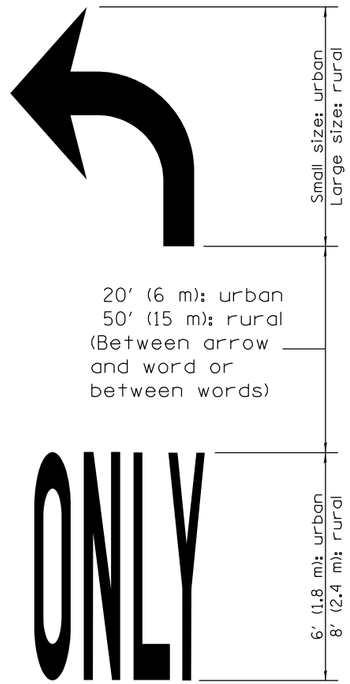

WORD AND ARROW LAYOUT

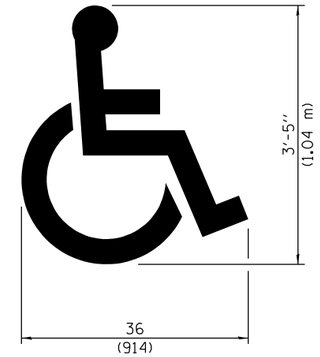

INTERNATIONAL SYMBOL OF ACCESSILITY

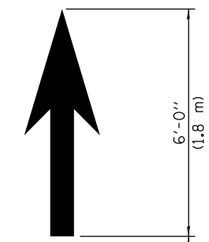

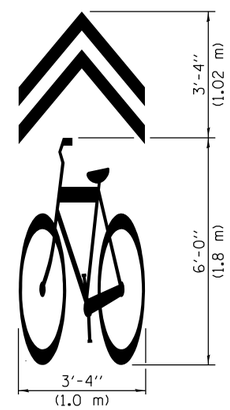

SHARED LANE SYMBOL

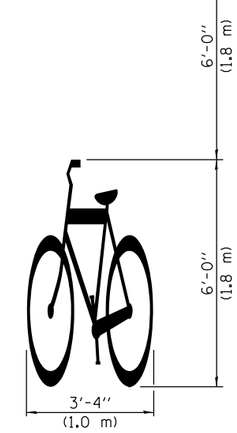

BIKE SYMBOL

(Arrow is optional.)

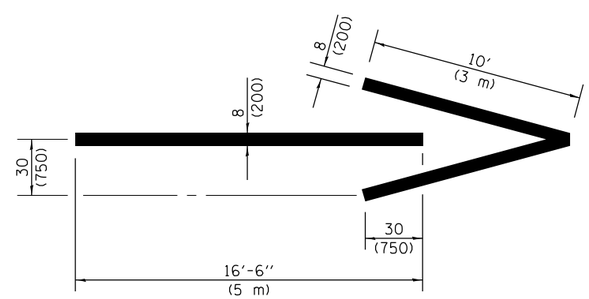

WRONG WAY ARROW

Illinois Department of Transportation

APPROVED January 1, 2015
ENGINEER OF OPERATIONS
APPROVED January 1, 2015
ENGINEER OF DESIGN AND ENVIRONMENT

ISSUED 1-1-97

TYPICAL PAVEMENT MARKINGS

(Sheet 3 of 3)

STANDARD 780001–05

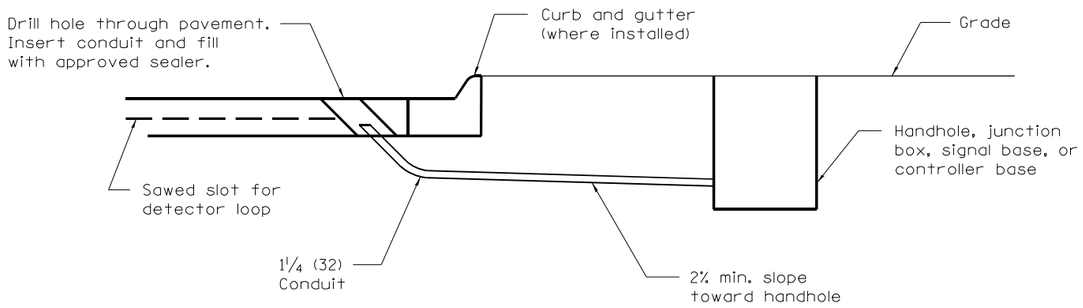

DETECTOR LOOP LEAD–IN

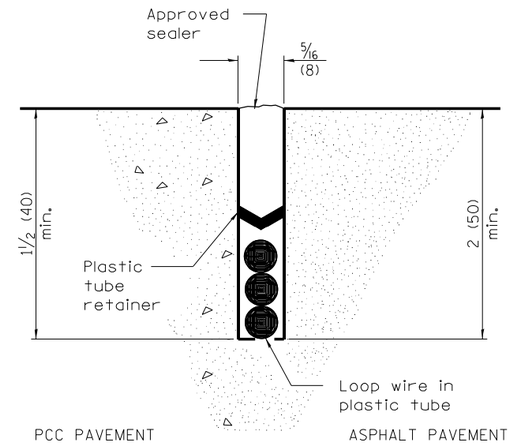

DETECTOR LOOP INSTALLATION

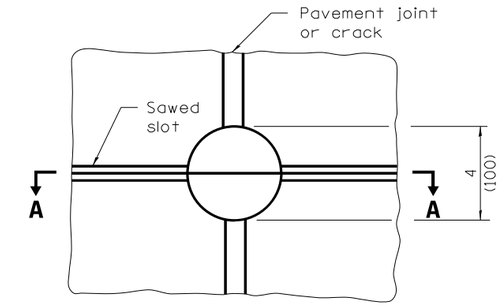

PLAN

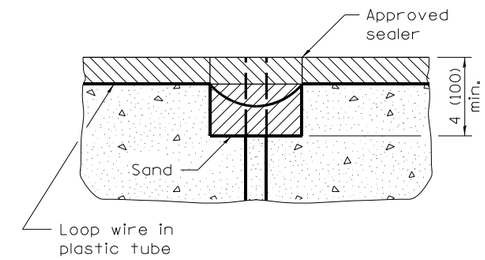

SECTION A–A

NOTE
Loop wire shall follow saw cut to bottom, forming slack section at joint.

DETECTOR LOOP AT PAVEMENT JOINT OR PAVEMENT CRACK

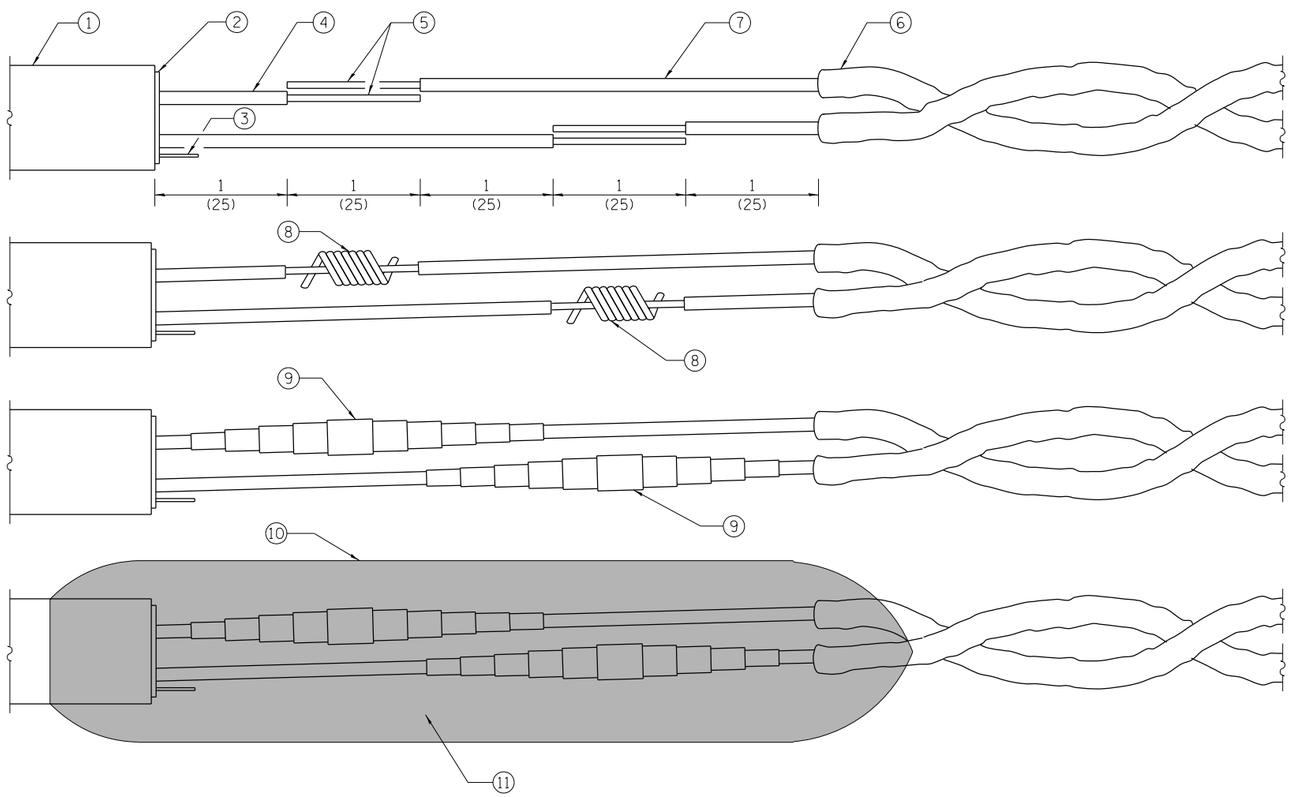

LOOP WIRE AND LEAD–IN CABLE SPLICE

1 = Lead-in cable (single pair or multipair)
2 = Lead-in cable shield
3 = Lead-in cable shield drain-wire
4 = Lead-in cable insulated conductor
5 = Bare conductor
6 = Loop wire in tube
7 = Loop wire insulated conductor
8 = Twisted and resin soldered conductor
9 = Electrical tape insulated spice
10 = Rigid mold
11 = Waterproof and dielectric resin

All dimensions are in inches (millimeters) unless otherwise shown.

Illinois Department of Transportation

APPROVED January 1, 2009
ENGINEER OF OPERATIONS
APPROVED January 1, 2009
ENGINEER OF DESIGN AND ENVIRONMENT

ISSUED 1-1-02

DATE	REVISIONS
1-1-09	Switched units to English (metric)
1-1-02	Renum. Standard 846001.

DETECTOR LOOP INSTALLATIONS

STANDARD 886001–01