STATE OF ILLINOIS
COUNTY OF LAKE
PLANS FOR PROPOSED ELA ROAD RESURFACING
SECTION 15-00144-21-RS

INDEX OF SHEETS

SHEET NO.	DESCRIPTION
1	COVER SHEET
2 - 3	GENERAL NOTES
4	SUMMARY OF QUANTITIES
5 - 8	TYPICAL SECTIONS - RESURFACING
9 - 10	TYPICAL SECTIONS - SIDEWALK
11 - 21	SCHEDULE OF QUANTITIES
22 - 26	REMOVAL AND ADJUSTMENT ITEMS
27 - 31	PLAN SHEETS - RESURFACING
32 - 36	PLAN SHEETS - SIDEWALK
37 - 39	TRAFFIC CONTROL PLAN
40 - 42	EROSION CONTROL PLAN
43	RETAINING WALL DETAILS
44 - 47	RAMP & ENTRANCE DETAILS
48 - 50	PROJECT DETAILS
51	PASSAGE NETWORK TRAFFIC COUNTERS
52 - 55	US 12 & ELA ROAD TRAFFIC SIGNAL PLANS (FOR INFORMATION ONLY)
56 - 94	CROSS SECTIONS
95 - 110	LCDOT DETAILS (See Sheet 3 for list)
111 - 148	IDOT HIGHWAY STANDARDS (See Sheet 3 for list)
149 - 150	Village of Lake Zurich Details

PAVEMENT DESIGN FOR RESURFACING

Cuba Rd. To IL Route 22.

IBR Value (for resurfacing only assume 3.00)	=> 3.00
REQUIRED STRUCTURAL NUMBER	=> 4.479
MILLING DEPTH	=> 2.25 INCHES
HOT-MIX ASPHALT SURFACE COURSE THICKNESS	=> 1.50 INCHES
HOT-MIX ASPHALT BINDER COURSE THICKNESS	=> 0.00 INCHES
HOT-MIX ASPHALT LEVELING BINDER (NOMINAL) THICKNESS	=> 0.75 INCHES
HOT-MIX ASPHALT BASE COURSE THICKNESS	=> 0.00 INCHES
DYNAFLECT EQUIVALENT STRUCTURAL VALUE OF EXISTING PAVEMENT	= 4.03
STRUCTURAL VALUE LOSS DUE TO MILLING (0.2 PER MILLING DEPTH INCH)	= -0.45
STRUCTURAL VALUE GAIN DUE TO PROPOSED HOT-MIX ASPHALT OVERLAY (0.4 PER HOT-MIX ASPHALT INCH THICKNESS)	= 0.90

HOT-MIX ASPHALT MIXTURE REQUIREMENTS

MIXTURE TYPE	AC TYPE	AIR VOIDS
HOT-MIX ASPHALT SURFACE COURSE, MIX "D", N50	PG 64-22	4% = 50 GYRATION
HOT-MIX ASPHALT SURFACE COURSE, MIX "D", N70	PG 64-22	4% = 70 GYRATION
POLYMERIZED LEVELING BINDER (MACHINE METHOD), IL-4.75, N50	PG 64-22	3.5% = 50 GYRATION
LEVELING BINDER (HAND METHOD), N70	PG 64-22	4% = 70 GYRATION

THE UNIT WEIGHT USED TO CALCULATE ALL HMA SURFACE MIXTURE QUANTITIES IS 112 LBS/SQ YD/IN.

WHEN RAP EXCEEDS 20%, THE NEW ASPHALT BINDER IN THE MIX SHALL BE PG 58-22.

PROJECT LOCATION

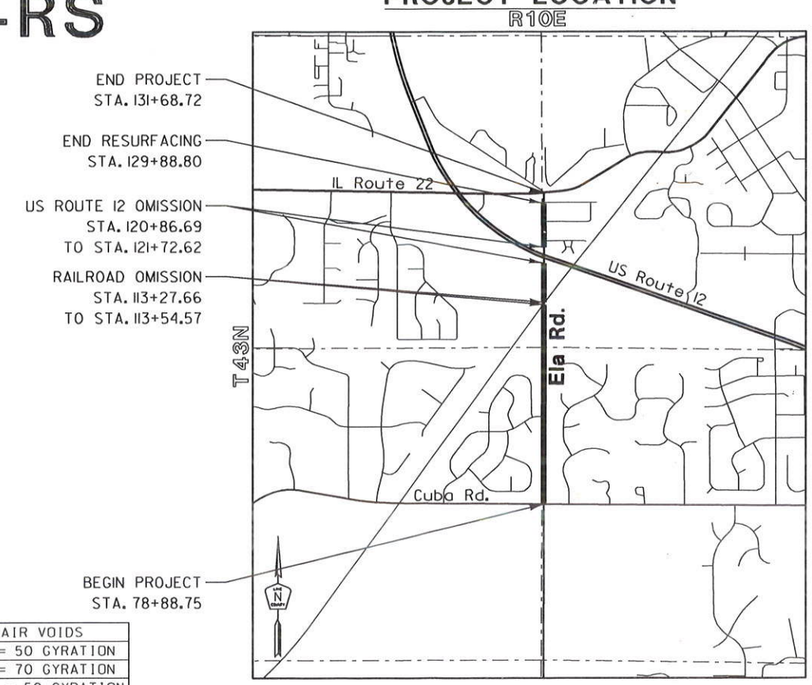

ROAD	STATION	STATION	LENGTH (FT.)	LENGTH (MI.)
ELA ROAD	78+88.75	131+68.72	5279.97	1.000
CN RAILROAD OMMISSION	113+27.66	113+54.57	(26.91)	(0.005)
US ROUTE 12 OMMISSION	120+86.69	121+72.62	(85.93)	(0.016)
NET LENGTH OF IMPROVEMENT			5167.13	0.979

ELA ROAD RESURFACING 15-00144-21-RS

RICHARD D. McMORRIS 062-055379 LICENSED PROFESSIONAL ENGINEER OF ILLINOIS

FOR UNDERGROUND UTILITY LOCATIONS, CALL

J. U. L. I. E.

TOLL FREE

800-892-0123

BUILDING LAKE COUNTY'S EFFECTIVE TRANSPORTATION SYSTEM TODAY

APPROVED
DEPARTMENT OF TRANSPORTATION

DATE Feb 19 20 16

Paula J. Trigg
Regional Engineer

County Engineer
On behalf of IDOT pursuant to Agreement of Understanding dated January 18, 2013

Plans Prepared By: LakeCounty Division of Transportation

Signature: [signature]
Date: 19 February 2016
Illinois License No: 62-055379
Expiration Date: 11/30/17
Field: CIVIL
Approved By: Paula J. Trigg, County Engineer
Date: 2/19/16

REVISIONS / REMARKS					
NO.	DESCRIPTION	DATE	BY	SURVEYOR:	/
		/ /		DSGNR/LIAISON:	KDN
		/ /		PLOTTED BY:	hdl7512 2/18/2016

VERT 5 0 — SCALES HORIZ. 0 20 40

ELA ROAD RESURFACING

LakeCounty Division of Transportation

ELA ROAD RESURFACING
COVER SHEET

ROUTE	SECTION	SECTION NUMBER	SHEET	SHEETS
CH60	144	15-00144-21-RS	1	150

FILE NAME: U:\Design\Nauman\15-00144-21-RS Ela Rd Resurfacing\Plans\15-00144-21-RS.dgn

LCDOT GENERAL NOTES
(Revised 1/5/15)

1. GENERAL

   a. All construction shall be done according to the State of Illinois "Standard Specifications for Road and Bridge Construction" adopted Jan. 1, 2012; the "Supplemental Specifications and Recurring Special Provisions, adopted Jan. 1, 2015; the latest edition of the "Illinois Manual on Uniform Traffic Control devices for Streets and Highways"; the details in these plans, and the Special Provisions included in the contract documents.

   b. The Contractor shall notify the Engineer at least 72 hours prior to beginning work and shall coordinate all construction operations with the Engineer.

   c. The Contractor shall coordinate his/her work with any adjacent projects that are or may be under construction.

   d. The Contractor shall verify all dimensions and existing conditions in the field prior to ordering materials and beginning construction. Where new work is proposed to meet existing features, it shall be the Contractor's responsibility to field check all dimensions and elevations and notify the Engineer of discrepancies before proceeding with construction.

   e. The Contractor shall provide access to abutting properties at all times during construction, except for brief periods of interruption. The Contractor shall notify the property owner no less than 24 hours in advance of the interruption of access and/or services. The notification will include the time and duration of the interruption. The cost to provide access shall be paid for and included in the cost of TRAFFIC CONTROL AND PROTECTION (SPECIAL)

2. SURVEY

   a. All elevations shown on these plans are based upon the National Geodetic Vertical Datum of 1929 (NGVD 29). The elevations shown on the plans are for finished grades unless otherwise noted.

   b. Where section or subsection monuments are encountered, the Engineer shall be notified before the monuments are removed. The Contractor shall carefully preserve all property marks and monuments until the owner, authorized surveyor or agent has witnessed or otherwise referenced their location.

   c. All radii for proposed curb and gutter are to the edge of pavement unless otherwise noted.

3. REMOVAL

   a. The Contractor shall saw cut the existing pavement, concrete curb & gutter, median, hot-mix asphalt shoulder; sidewalk; and/or other appurtenances as shown on the plans, to separate the existing material to be removed, by means of an approved concrete saw to a depth shown on the plans or as directed by the Engineer. This work shall be included in the cost of the item being removed.

   The Contractor shall be required to saw vertical cuts so as to form clean vertical joints. Should the Contractor deface any edge, a new sawed joint shall be provided and any additional work, including removal and replacement, shall be done at the Contractor's expense.

   b. All excess material shall be disposed of offsite on the day it is excavated or removed.

   c. The Contractor is prohibited from burning any material within or adjacent to the project limits. All excess or waste material shall be hauled away from the project site by the contractor and legally disposed of outside the right-of-way. No extra compensation will be allowed the contractor for any expense incurred by complying with the requirements of this note.

4. DRAINAGE

   a. The cost of connecting existing storm sewers to the proposed drainage system shall be included in the unit cost of the proposed drainage structure. The cost of connecting proposed storm sewer to existing structures shall be included in the unit cost of the proposed storm sewer. Additional pipe required to complete the connections will be paid for at the contract unit price for "STORM SEWER" of the type, size and class required.

   b. Unless otherwise noted on the plans, the existing drainage facilities shall remain in use during the period of construction. During construction operations the Contractor shall ensure positive site drainage at the conclusion of each day. Site drainage may be achieved by ditching, pumping, or any other method acceptable to the Engineer.

   c. The Contractor shall confirm all existing storm sewer pipe sizes and inverts prior to ordering structures. Any modification of structures due to the failure of the Contractor to perform this task shall be at the Contractor's expense and may lead to the rejection of the structure in the field if the modification is not approved by the Engineer.

4. DRAINAGE (CONTINUED)

   d. If during construction, the Contractor encounters or otherwise becomes aware of any sewers or underdrains within the right-of-way other than those shown on the plans, he/she shall inform the Engineer, who shall direct the work necessary to maintain or replace the facilities in service and to protect them from damage during construction if maintained. Existing facilities to be maintained that are damaged because of non-compliance with this provision shall be replaced at the Contractor's own expense. Should the Engineer direct the replacement of a facility, the necessary work and payment shall be according to Sections 550 and 601, and Article 104.02 of the "Standard Specifications".

   e. When existing drainage facilities are disturbed, the contractor shall provide and maintain temporary outlets and connections for all private or public drains, culverts, sewers or catch basins. The Contractor shall provide facilities to take in all storm water which will be received by these drains and sewers and discharge the same. The Contractor shall provide and maintain an efficient pumping plant, if necessary, and a temporary outlet. The Contractor shall be prepared at all times to dispose of the water received from temporary connections until such time as the permanent connections with sewer are built and in service. This work will not be paid for separately, but shall be included in the cost of the storm sewers and drainage structures installed as part of this project.

   f. The Contractor shall determine when flat slab tops are required on manholes and catch basins. Restricted depth manholes and catch basins shall be constructed according to LCDOT standard LC6000. Sumps, where required, will be included in the unit price of the restricted depth structure. No additional compensation shall be allowed for the use of flat slab tops.

   g. All existing drainage facilities, headwalls and fences no longer required, in the opinion of the Engineer, shall be removed. The cost of removal of existing pipe culverts, storm sewers, drainage structures, concrete headwalls, fencing or other obstructions which interfere with the proposed improvements and which are not shown to be removed as a separate pay item shall be considered included in the cost of EARTH EXCAVATION.

   h. During the construction operation when any loose material is deposited in the flow line of ditches, gutters or drainage structures so the natural flow of water is obstructed, the material shall be removed at the close of each working day.

   At the conclusion of the construction operations all drainage structures shall be free from all dirt and debris. This work will not be paid for separately but shall be considered included in the unit costs of the various Temporary Erosion Control Systems e.g. INLET FILTERS, INLET PROTECTION SPECIAL, TEMPORARY DITCH CHECKS, etc…

   i. Top of frame (rim) elevations shown on the plans are only to assist the Contractor in determining the approximate overall height of the structure. Frames on all new structures shall be adjusted to the final elevations of the areas in which they are located as part of the structure cost. Any plating of the structure required for staged construction shall be included in the cost of the structure.

   j. Unless otherwise noted, locations shown on the plans are to the edge of pavement for structures in the curb and to the center of the structure for all other structures. All top of frame (rim) elevations for structures located in the curb and gutter are at the edge of pavement. See the LCDOT detail for Drainage Structure Rim Elevations and Offsets LC6003. Drainage structure flat-tops and cones shall be turned so that the frames are closest to the centerline of the lane unless otherwise noted. All flat-tops and cones are assumed to be eccentric unless otherwise noted.

   k. Stations, offsets, and invert elevations for flared end sections are given at the centerline of the outlet end of the flared end section. The flared end section shall be installed at the same slope as the outlet pipe.

   l. All frames with closed lids to be furnished as part of this contract, for the construction, adjustment or reconstruction of manholes, catch basins, inlets, valve vaults, or meter vaults shall have cast into the lid one of the following words: Lids for storm sewer structures shall bear the word STORM. Lids for sanitary sewer structures shall bear the word SANITARY. Lids for water system structures shall bear the word WATER. Additionally open grates or lids shall include the wording DUMP NO WASTE, DRAINS TO WATERWAYS. This work shall be included in the unit cost of the structure being constructed, adjusted or reconstructed.

   m. Hot-mix asphalt or concrete pavement crossings shall not be left in gravel overnight. This will include the main road, side streets, private entrances, commercial entrances and parking areas. Temporary hot-mix asphalt patching or steel plates (see steel plate special provision) at the Contractor's expense may be used in lieu of immediate pavement replacement.

4. DRAINAGE (CONTINUED)

   n. Temporary sheeting or bracing for sewer trenches that may be required shall be the responsibility of the Contractor. The cost of this work shall be included in the proposed drainage and/or utility unit prices and no additional compensation will be allowed.

   o. At locations where the proposed storm sewer crosses over utilities, a 4" Styrofoam cushion shall be placed under the storm sewer when directed to do so by the Engineer. This work shall be included in the unit price for the proposed storm sewer.

   p. All field tile encountered during construction operations shall be connected to the proposed storm sewer or extended to outlet into a proposed drainage way. If this cannot be accomplished, then it shall be repaired with new pipe of similar size and material to the original line and put in acceptable operating condition. A record of the location of all field tile or on-site drain pipe encountered shall be kept by the contractor and turned over to the engineer upon completion of the project. An estimated quantity of PIPE DRAINS, 4" and PIPE DRAINS, 6" has been included for this work.

   q. Precast concrete adjustment rings, maximum of 12" in height, will be allowed in the adjustment or reconstruction of catch basin, manhole, inlet and valve vault structures. HDPE plastic and recycled rubber adjusting rings may be used according to Section 602 of the "Standard Specifications". Common brick will not be allowed. All type 8 grates on drainage structures shall be adjusted to plan grade with 4" minimum concrete adjustment rings. The rings shall be included in the cost of the structure.

   r. Couplings used for connections of new pipe to existing pipe and where dissimilar pipe and joint materials are encountered shall be approved by the Engineer prior to installation. No stainless steel shear rings will be allowed. This work will not be paid for separately, but shall be included in the cost of the storm sewer being installed.

5. DRIVEWAYS and ENTRANCES

   n. Existing hot-mix asphalt and gravel driveways and entrances shall be re-surfaced to one foot inside the right-of-way with hot-mix asphalt surface course as scheduled on the plans.

   o. Existing concrete driveways and entrances shall be reconstructed to one foot inside the right-of-way with concrete as scheduled on the plans.

   p. Existing hot-mix asphalt driveways and entrances shall be sawcut at the limits of construction line. The surface shall be removed to the sawcut. The aggregate base shall be appropriately prepared, and the driveway shall be resurfaced with Hot-Mix Asphalt Surface Course.

   q. Existing aggregate field entrances shall be built up in place to one foot inside the right-of-way with aggregate base course.

6. LANDSCAPING: Phosphorus Fertilizer Nutrient **shall not** be used on Lake County Highways.

7. MILLED PAVEMENT: When milled pavement is open to traffic, the maximum elevation difference between lanes, at concrete curb and gutter, or existing ground (shoulders, entrances etc…) shall not exceed 1.5 inches. With written approval from the Engineer the maximum elevation difference may be up to 3 inches if the edge of the milling is sloped a minimum 3:1 (H:V).

8. SIGNS

   a. The Contractor will be required to relocate or remove and replace signs which interfere with his\her construction operations, and to temporarily reset all such signs during construction operations according to **Article 107.25 of the "Standard Specifications".**

      - All unused signs shall be returned to the County.
      - Longer posts may be required at some temporary or permanent sign locations to maintain proper sign elevations.

   b. Permanent signing will be furnished and installed by LCDOT.

9. UTILITIES

a. Location information for underground utility facilities shown on the plans and/or included in the Contract Specifications represents the best information provided to LCDOT, and is only included for the convenience of the Contractor. LCDOT assumes no responsibility for the sufficiency or the accuracy of the location information provided.

b. Before starting any excavation, the Contractor shall contact "JULIE" at 1-800-892-0123 for field locations of buried electric, telephone, gas, water, sewer, cable, etc.., utility lines (minimum 48 hours notification is required).

c. The Contractor shall be responsible for any damage or destruction of public or private property according to the special provisions and Article 107.20 of the "Standard Specifications". The Contractor shall restore such property at his/her own expense. The Contractor shall use all necessary precautions and protective measures required to maintain existing utilities, sewers, and appurtenances that must be kept in operation. In particular, the Contractor will take adequate measures to prevent the undermining of utilities and sewers which are still in service.

10. MAILBOXES

a. According to Article 107.20 of the "Standard Specifications" the Contractor shall remove all mailboxes within the limits of construction which interfere with construction operations. The removed mailboxes shall be erected at temporary locations. As soon as construction operations permit, the Contractor shall set the mailboxes at their permanent locations as directed by the Engineer and approved by the Postmaster. This work is included in the unit bid price of the contract, and no additional compensation will be allowed.

11. MISCELLANEOUS

a. The Contractor shall provide temporary toilet facilities for the use of all the Contractors' personnel employed on the work site, and shall maintain same in proper sanitary condition. The temporary facilities shall include hand sanitizing stations. At the completion of the project, the facilities shall be removed and the premises left clean. The Engineer shall approve the location of the temporary toilets. The cost of this work shall be included in the unit bid prices and no additional compensation will be allowed.

b. Generally 10 foot transitions shall be used to match proposed items of work to existing items in the field, unless otherwise shown on the plans. The transitions shall be paid for at the contract unit price for the proposed item of work specified.

c. The Contractor shall not cross completed surface course, or existing pavement not scheduled to be removed, with construction equipment which may damage the pavement.

d. All references in the highway standards and standard specifications for reinforcement, dowel bars and tie bars in pavement, shoulders, curb, gutter, combination curb & gutter and median, and chair supports for continuously reinforced concrete pavement, shall be epoxy coated, unless noted on the plans.

e. The Contractor's attention is called to the fact that some quantities are given in both summary form and on the plan sheets. Care should be taken to avoid duplication of quantities.

12. PROJECT SPECIFIC NOTES

a. Proposed lines and grades shown on the construction plans represent finished grade elevations, unless otherwise noted.

b. All excavation and embankment shall be constructed 4 inches below finished grade line to allow for top soil placement (where top soil placement is specified).

c. The Contractor shall adhere to limits of restoration shown. Areas outside these limits that are damaged or disturbed by the Contractor shall be restored by the Contractor at his/her expense, and no additional compensation will be allowed.

12. PROJECT SPECIFIC NOTES (Continued)

d. Temporary fence shall be placed throughout the limits of the project and at the direction of the Engineer. It shall also be placed around all trees that are to be protected unless otherwise directed by the Engineer. See special provisions for more detail.

e. The Village of Lake Zurich Details included herein only applies to moving the Fire Hydrant & Valve and other water main related tasks.

13. COMMITMENTS: No Commitments for this Project

14. POINTS OF CONTACT

Lake County PASSAGE Mr. Jon Nelson, P.E. Engineer of Traffic Ph: (847)377-7000 Fax: (847) 984-5606	Comcast Mr. Robert Schulter, Manager 688 Industrial Drive Elmhurst, IL 60126 Ph: (630) 600-6347 Fax: (630) 600-6390 bob_schulter@cable.comcast.com Contact first Adm. Assistant: Martha Gieras Ph: (630) 600-6352 martha_gieras@cable.comcast.com
Village of Lake Zurich Mr. Michael J Brown Public Works Manager 505 Telser Road Lake Zurich, IL 60047 Ph: (847) 540-1696 ext 8005 mike.brown@lakezurich.org	
AT&T Corporation Mr. Hector Garcia Legal Mandate Department 1000 Commerce Drive, Floor 1 Oak Brook, IL. 60523 Ph: (847) 888-6799 Fax: (630) 573-5445 Cell: (630) 639-8372 hg2929@att.com	ComEd Ms. Terri J. Bleck, Manager, Public Relocation Group - Northeast Region 1500 Franklin Blvd. Libertyville, IL 60048 Ph: (847) 816-5239 Fax: (847) 816-5348 terri.bleck@ComEd.com
Nicor Gas Mr. Bruce Koppang DOT Liaison 1844 Ferry Rd. Naperville, IL 60563 Ph: (630) 388-3046 Fax: (630) 983-4028 Cell: (708) 243-5136 bkoppan@aglresources.com	Canadian National Railroad Mr. Paul Chojenski 17641 South Ashland Avenue Homewood, IL 60430 Ph: (708) 332-3557 Paul.Chojenski@cn.ca

BENCHMARKS

NO.	DESCRIPTION	ELEVATION
BM #3	MULLER BOLT ON FIRE HYDRANT AT SOUTHWEST CORNER OF US ROUTE 12 (RAND ROAD) AND ELA ROAD (MCDONALDS)	854.905
BM #4	FOUND IRON PIPE #209 AT THE NORTHWEST CORNER OF US ROUTE 12 (RAND ROAD) AND ELA ROAD (MOBIL)	853.2
BM #5	MULLER BOLT ON FIRE HYDRANT AT SOUTHWEST CORNER OF IL ROUTE 22 AND ELA ROAD	857.035
BM #6	MULLER BOLT ON FIRE HYDRANT WEST SIDE OF ELA ROAD BETWEEN TARGET ENTRANCE AND CN RAILROAD	854.52

LCDOT DETAILS

Detail No.	Title
LC0020	Trench Widths for Trench Backfill and Pavement Replacement Bituminous
LC2050	Temporary Ditch Check Installation for Roadway or Drainage Ditch
LC2051	Perimeter Erosion Barrier Installation
LC2200	Vegatation Maintenance Required Clearance for 10' Bikepath
LC3000	Curb & Gutter Subgrade Options
LC4100	Typical Minor Access - Private Entrance
LC4101	Typical Major Access - Commercial Entrance
LC4110	Typical Minor Access Treatment on Resurfacing Projects
LC4111	Typical Major Access Treatment on Resurfacing Projects
LC4121	Mailbox Turnout Along Curbed Roads
LC4201	Detectable Warnings and Pedestrian Pushbutton Locations
LC4202	Concrete Washout Facilities
LC4204	Curb Flares for Sidewalks
LC6003	Drainage Structure Elevations and Offsets
LC6020	Sub-Surface Drains
LC7000	Modified Standard 701011 Two Lane, Two Way, Off-Road Operations Day Operations Only
LC7003	Urban Lane Closure Multilane Intersection
LC7004	Modified District 1 Standard Traffic Control and Protection for Sideroads Intersections and Driveways
LC7005	Typical Lane Closure 3 Lane Road Section
LC7200	Direction Indicator Barricades
LC7800	Typical Pavement Markings for County Highways
LC7802	Short Term Pavement Markings
LC7803	Typical Pavement Markings for Railroad Crossings on County Highways
LC8600	Typical Detector Loop Layouts

IDOT HIGHWAY STANDARDS

Standard No.	Title
000001-06	Standard Symbols Abbreviations and Patterns
424001-08	Perpendicular Curb Ramps for Sidewalks
442201-03	Class C and D Patches
542401-01	Metal End Section for Pipe Culverts
602301-04	Inlet - Type A
602401-03	Manhole Type A
602501-02	Valve Vault Type A
604001-04	Fame and Lids Type 1
604036-03	Grate Type 8
606001-06	Concrete Curb Type B and Combination Curb and Gutter
701001-02	Off-Rd Operations, 2L, 2W, More Than 15' (4.5m) Away
701006-05	Off-Rd Operations, 2L, 2W, 15' (4.5m) to 24" (600mm) From Pavement Edge
701101-04	Off-Rd Operations, Multilane, 15' (4.5m) to 24" (600mm) From Pavement Edge
701201-04	Lane Closure, 2L, 2W, Day Only, For Speeds ≥ 45 mph
701301-04	Lane Closure, 2L, 2W, Short Time Operations
701306-03	Lane Closure, 2L, 2W, Slow Moving Operations Day Only, For Speeds ≥ 45 mph
701311-03	Lane Closure, 2L, 2W, Moving Operations - Day Only
701326-04	Lane Closure, 2L, 2W, Pavement Widening, For Speeds ≥ 45 mph
701336-06	Lane Closure, 2L, 2W, Work Areas in Series, For Speeds ≥ 45 mph
701501-06	Urban Lane Closure, 2L, 2W, Undivided
701502-06	Urban Lane Closure, 2L, 2W, with Bidirectional Left Turn Lane
701801-05	Sidewalk, Corner or Crosswalk Closure
701901-04	Traffic Control Devices
814001-03	Handholes
886001-01	Detector Loop Installations

SUMMARY OF QUANTITIES

PAY ITEM NO.	SPECIAL*	CONT**	SP***	IDOT CODED PAY ITEM NO.	DESCRIPTION	UNIT	QUANTITY	SCHEDULE NUMBER	PLAN SHEET
1	X		X	20100110	TREE REMOVAL (6 TO 15 UNITS DIAMETER)	UNIT	10.0	1	11
2	X		X	20101100	TREE TRUNK PROTECTION	EACH	11.0	2	11
3	X		X	20101200	TREE ROOT PRUNING	EACH	11.0		
4	X			20101300	TREE PRUNING (1 TO 10 INCH DIAMETER)	EACH	1.0		
5	X			20101350	TREE PRUNING (OVER 10 INCH DIAMETER)	EACH	2.0		
6			X	20200100	EARTH EXCAVATION	CU YD	278.0	3	12
7			X	20200600	EXCAVATING AND GRADING EXISTING SHOULDER	UNIT	51.0	4	11
8				20800150	TRENCH BACKFILL	CU YD	2.0	5	11
9			X	20900110	POROUS GRANULAR BACKFILL	CU YD	4.0	6	11
10			X	21101615	TOPSOIL FURNISH AND PLACE, 4"	SQ YD	1144.0	7	13
11				25000400	NITROGEN FERTILIZER NUTRIENT	LBS	23.0		
12				25000600	POTASSIUM FERTILIZER NUTRIENT	LBS	23.0		
13				25200100	SODDING	SQ YD	1144.0		
14				25200200	SUPPLEMENTAL WATERING	UNIT	10.0		
15			X	28000305	TEMPORARY DITCH CHECKS	FOOT	28.0	8	14
16				28000510	INLET FILTERS	EACH	9.0		
17			X	35101400	AGGREGATE BASE COURSE TYPE B	TON	237.0	9	14
18			X	40600275	BITUMINOUS MATERIALS (PRIME COAT)	LBS	17386.0	10	13
19		X	X	40600535	LEVELING BINDER (HAND METHOD), N70	TON	20.0	n/a	n/a
20				40600827	POLYMERIZED LEVELING BINDER (MACHINE METHOD), IL-4.75, N50	TON	922.0	11	14
21				40600990	TEMPORARY RAMP	SQ YD	22.0	12	14
22				40603085	HOT-MIX ASPHALT BINDER COURSE, IL-19.0, N70	TON	403.0	13	15
23				40603335	HOT-MIX ASPHALT SURFACE COURSE, MIX "D", N50	TON	5.0	14	15
24				40603340	HOT-MIX ASPHALT SURFACE COURSE, MIX "D", N70	TON	2055.0	15	16
25				42001300	PROTECTIVE COAT	SQ YD	781.0	16	15
26				42300200	PORTLAND CEMENT CONCRETE DRIVEWAY PAVEMENT, 6 INCH	SQ YD	24.0	14	15
27				42400200	PORTLAND CEMENT CONCRETE SIDEWALK 5 INCH	SQ FT	4827.0	17	15
28				42400300	PORTLAND CEMENT CONCRETE SIDEWALK 6 INCH	SQ FT	83.0		
29			X	42400800	DETECTABLE WARNINGS	SQ FT	82.0		
30			X	44000158	HOT-MIX ASPHALT SURFACE REMOVAL 2 1/4"	SQ YD	12912.0	18	17
31				44000500	COMBINATION CURB AND GUTTER REMOVAL	FOOT	480.0	19	18
32				44000600	SIDEWALK REMOVAL	SQ FT	456.0	17	15
33			X	44201773	CLASS D PATCHES, TYPE I, 10 INCH	SQ YD	119.0	20	16
34			X	44201777	CLASS D PATCHES, TYPE II, 10 INCH	SQ YD	178.0		
35			X	44201781	CLASS D PATCHES, TYPE III, 10 INCH	SQ YD	534.0		
36			X	44201783	CLASS D PATCHES, TYPE IV, 10 INCH	SQ YD	356.0		
37				50105220	PIPE CULVERT REMOVAL	FOOT	20.0	5	11
38				542C0220	PIPE CULVERTS, CLASS C, TYPE 1 15"	FOOT	23.0		
39				54215550	METAL END SECTIONS 15"	EACH	2.0		
40				550B0050	STORM SEWERS, CLASS B, TYPE 1 12"	FOOT	34.0		
41	X		X	56400800	FIRE HYDRANT AND VALVE TO BE MOVED	EACH	1.0	21	17
42	X		X	56500600	DOMESTIC WATER SERVICE BOXES TO BE ADJUSTED	EACH	1.0		
43	X	X	X	60100905	PIPE DRAINS 4"	FOOT	50.0	n/a	n/a
44	X	X	X	60100915	PIPE DRAINS 6"	FOOT	50.0	n/a	n/a
45				60236200	INLETS, TYPE A, TYPE 8 GRATE	EACH	1.0	5	11
46				60255500	MANHOLES TO BE ADJUSTED	EACH	1.0		
47				60600095	CLASS SI CONCRETE (OUTLET)	CU YD	3.0	22	17
48				60600605	CONCRETE CURB, TYPE B	FOOT	72.0	19	18
49			X	60603900	COMBINATION CONCRETE CURB AND GUTTER, TYPE B-6.12 (ABUTTING EXISTING PAVEMENT)	FOOT	354.0		
50			X	60605100	COMBINATION CONCRETE CURB AND GUTTER, TYPE B-6.24 (ABUTTING EXISTING PAVEMENT)	FOOT	127.0		
51				67100100	MOBILIZATION	L SUM	1.0	n/a	n/a
52	X			70300100	SHORT TERM PAVEMENT MARKING	FOOT	23401.0	23	18

SUMMARY OF QUANTITIES (cont)

PAY ITEM NO.	SPECIAL*	CONT**	SP***	IDOT CODED PAY ITEM NO.	DESCRIPTION	UNIT	QUANTITY	SCHEDULE NUMBER	PLAN SHEET
53	X			70300210	TEMPORARY PAVEMENT MARKING - LETTERS AND SYMBOLS	SQ FT	754.4	24	19
54	X			70300220	TEMPORARY PAVEMENT MARKING - LINE 4"	FOOT	12327.0		
55	X			70300230	TEMPORARY PAVEMENT MARKING - LINE 5"	FOOT	9831.0		
56	X			70300240	TEMPORARY PAVEMENT MARKING - LINE 6"	FOOT	2521.0		
57	X			70300260	TEMPORARY PAVEMENT MARKING - LINE 12"	FOOT	620.0		
58	X			70300280	TEMPORARY PAVEMENT MARKING - LINE 24"	FOOT	309.0		
59	X			70300520	PAVEMENT MARKING TAPE TYPE III 4"	FOOT	5850.0	23	18
60	X			70301000	WORK ZONE PAVEMENT MARKING REMOVAL	SQ FT	1950.0		
61	X		X	78000200	THERMOPLASTIC PAVEMENT MARKING - LINE 4"	FOOT	111.0	25	20
62	X		X	78000300	THERMOPLASTIC PAVEMENT MARKING - LINE 5"	FOOT	1030.0		
63	X		X	78000400	THERMOPLASTIC PAVEMENT MARKING - LINE 6"	FOOT	98.0		
64	X		X	78000600	THERMOPLASTIC PAVEMENT MARKING - LINE 12"	FOOT	115.0		
65	X		X	78000650	THERMOPLASTIC PAVEMENT MARKING - LINE 24"	FOOT	74.0		
66	X			78001120	PAINT PAVEMENT MARKING - LINE 5"	FOOT	8802.0	26	20
67	X			78008200	POLYUREA PAVEMENT MARKING TYPE 1 - LETTERS AND SYMBOLS	SQ FT	59.8	27	20
68	X			78008210	POLYUREA PAVEMENT MARKING TYPE 1 - LINE 4"	FOOT	319.0		
69	X			78008220	POLYUREA PAVEMENT MARKING TYPE 1 - LINE 5"	FOOT	309.0		
70	X			78008230	POLYUREA PAVEMENT MARKING TYPE 1 - LINE 6"	FOOT	152.0		
71	X			78008270	POLYUREA PAVEMENT MARKING TYPE 1 - LINE 24"	FOOT	49.0		
72	X			78300100	PAVEMENT MARKING REMOVAL	SQ FT	430.0		
73	X		X	88600600	DETECTOR LOOP REPLACEMENT	FOOT	1537.0	28	20
74	X		X	89502380	REMOVE EXISTING HANDHOLE	EACH	1.0	21	17
75	X			B2006216	TREE, SYRINGA RETICULATA (JAPANESE TREE LILAC), 2" CALIPER, TREE FORM, BALLED AND BURLAPPED	EACH	2.0	n/a	n/a
76	X		X	K0026830	SHRUB REMOVAL	EACH	16.0	1	11
77		X	X	LC200051	REJECTED LOAD TRANSPORTATION	LOAD	2.0	n/a	n/a
78			X	LC200501	MAINTENANCE OF TEMPORARY EROSION CONTROL SYSTEMS	UNIT	10538.0	n/a	n/a
79			X	LC400100	BUTT JOINT FOR ENTRANCE RESURFACING	FOOT	270.8	29	21
80			X	LC500411	CONCRETE BLOCK WALL SEALANT	SQ FT	78.0	30	21
81	X		X	LC600200	INSTALL SURVEY MONUMENTS	EACH	2.0	31	21
82	X		X	LC780020	GROOVED THERMOPLASTIC PAVEMENT MARKINGS - LETTERS AND SYMBOLS	SQ FT	754.4	32	21
83	X		X	LC780021	GROOVED THERMOPLASTIC PAVEMENT MARKINGS - LINE 4"	FOOT	12216.0		
84	X		X	LC780023	GROOVED THERMOPLASTIC PAVEMENT MARKINGS - LINE 6"	FOOT	2423.0		
85	X		X	LC780025	GROOVED THERMOPLASTIC PAVEMENT MARKINGS - LINE 12"	FOOT	505.0		
86	X		X	LC780026	GROOVED THERMOPLASTIC PAVEMENT MARKINGS - LINE 24"	FOOT	201.0		
87	X		X	LC800868	REMOVE AND REINSTALL EXISTING WIRELESS DETECTOR UNIT	EACH	2.0	21	17
88	X		X	X0324380	REMOVE AND REPLACE LID	EACH	1.0	5	11
89			X	X2800500	INLET PROTECTION, SPECIAL	EACH	7.0	8	14
90			X	X4401198	HOT-MIX ASPHALT SURFACE REMOVAL VARIABLE DEPTH	SQ YD	1612.0	18A	17
91			X	X6013600	PIPE UNDERDRAINS 4" (MODIFIED)	FOOT	37.0	5	11
92			X	X6061005	CONCRETE CURB TYPE B (SPECIAL)	FOOT	120.0	19	18
93			X	X6700405	ENGINEER'S FIELD OFFICE, TYPE A (MODIFIED)	CAL MO	4.0	n/a	n/a
94			X	X7010216	TRAFFIC CONTROL AND PROTECTION, (SPECIAL)	L SUM	1.0	n/a	n/a
95	X		X	XX005631	UTILITY STRUCTURES TO BE ADJUSTED	EACH	1.0	21	17
96	X	X	X	XX006658	FLOCCULATION LOGS	EACH	2.0	n/a	n/a
97	X	X	X	XX006659	FLOCCULATION POWDER	POUND	5.0	n/a	n/a
98			X	XX006729	PERIMETER EROSION BARRIER, ROLLED EXCELSIOR	FOOT	628.0	8	14
99			X	XX008865	PERMEABLE PLASTIC BERM	FOOT	28.0		
100	X		X	XX206400	MAILBOX POST	EACH	1.0	14	15
101			X	Z0013302	SEGMENTAL CONCRETE BLOCK WALL	SQ FT	54.0	30	21
102			X	Z0048665	RAILROAD PROTECTIVE LIABILITY INSURANCE	L SUM	1.0	n/a	n/a

SPECIAL* = Speciality Pay Item

CONT = Contingency/Estimated Quantity**

SP* = Covered by a Special Provision in the Contract Specifications.**

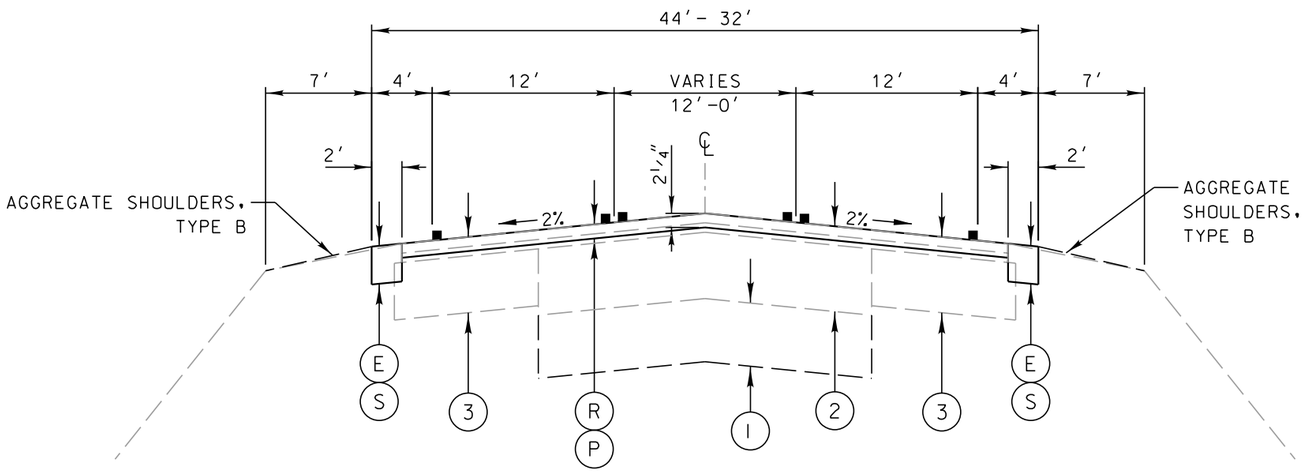

EXISTING PAVEMENT (FROM RECORDS):

(1) 10" AGGREGATE SUBBASE, TYPE B

(2) 14½" HMA PAVEMENT
BASE COURSE: 11½"
BINDER COURSE 1½"
SURFACE COURSE: 1½"

(3) 11" HMA PAVEMENT
BASE COURSE: 8"
BINDER COURSE 1½"
SURFACE COURSE: 1½"

REMOVALS:

(R) 2¼" HMA SURFACE REMOVAL

(E) EXCAVATING AND GRADING EXISTING SHOULDER

PROPOSED PAVEMENT:

(P) ¾" HMA POLY LEVELING COURSE
1½" HMA SURFACE COURSE

(S) 6" HMA SHOULDER
BINDER COURSE: 4½"
SURFACE COURSE: 1½"

ELA ROAD
STA. 79+28.0 TO 87+34.0

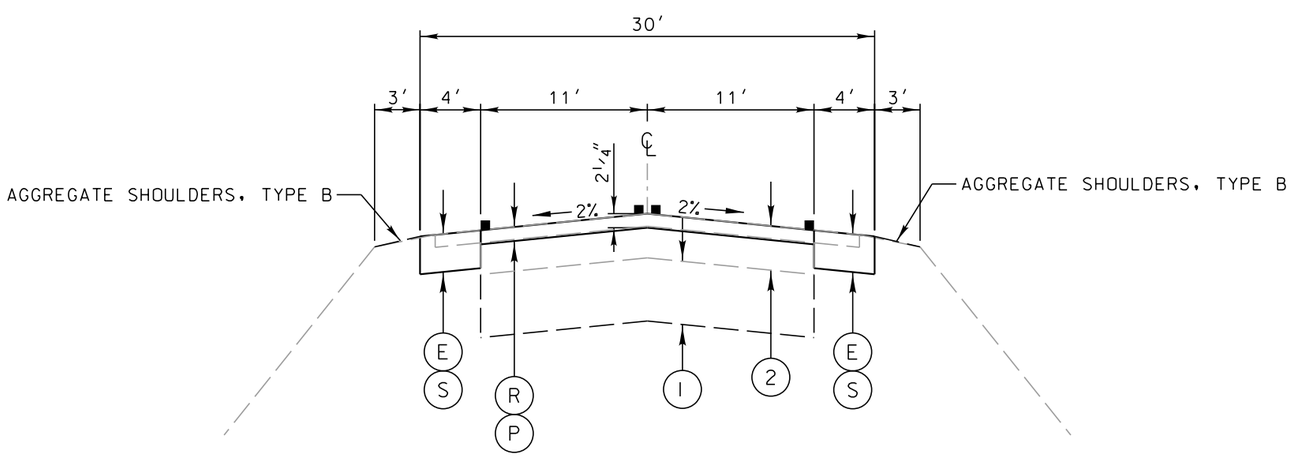

EXISTING PAVEMENT (FROM RECORDS):

(1) 10" AGGREGATE SUBBASE, TYPE B

(2) 7" HMA PAVEMENT
BASE COURSE: 5"
SURFACE COURSE: 2"

(3) 2" HMA SHOULDER

REMOVALS:

(R) 2¼" HMA SURFACE REMOVAL

(E) EXCAVATING AND GRADING EXISTING SHOULDER

PROPOSED PAVEMENT:

(P) ¾" HMA POLY LEVELING COURSE
1½" HMA SURFACE COURSE

(S) 6" HMA SHOULDER
BINDER COURSE: 4½"
SURFACE COURSE: 1½"

ELA ROAD
STA. 87+34.0 TO 90+69.0
STA. 97+99.0 TO 101+18.0

REVISIONS / REMARKS					
NO.	DESCRIPTION	DATE	BY	SURVEYOR:	/
		/ /		DSGNR/LIAISON:	KDN
		/ /		PLOTTED BY:	hdl7512 2/18/2016

6" VERT 0 — SCALES HORIZ. 0 5 10

ELA ROAD RESURFACING

LakeCounty Division of Transportation

ELA ROAD RESURFACING
TYPICAL SECTIONS - RESURFACING

ROUTE	SECTION	SECTION NUMBER	SHEET	SHEETS
CH60	144	15-00144-21-RS	5	150

FILE NAME: U:\Design\Nauman\15-00144-21-RS Ela Rd Resurfacing\Plans\15-00144-21-RS.dgn

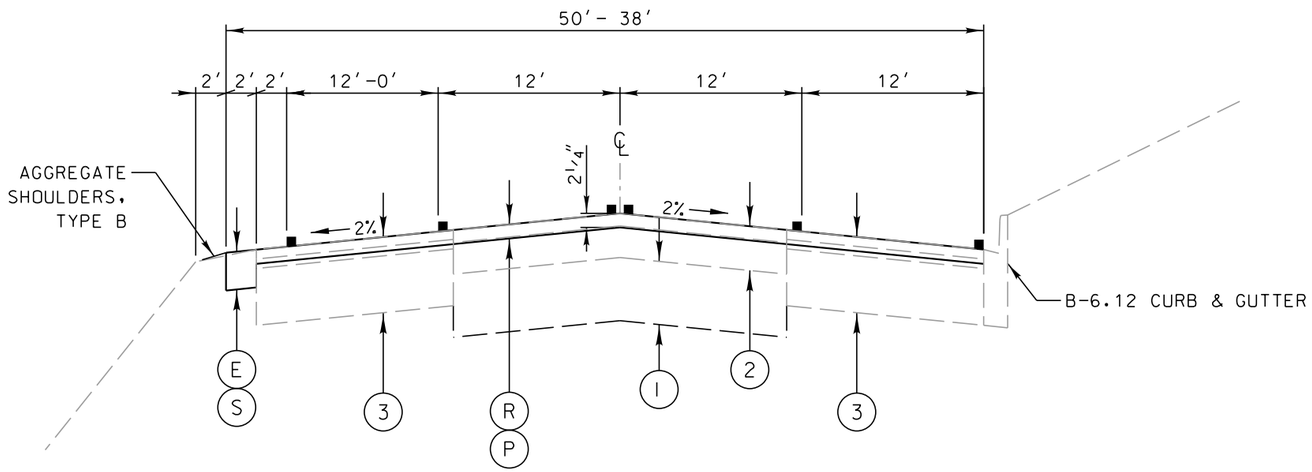

EXISTING PAVEMENT (FROM RECORDS):

1. 10" AGGREGATE SUBBASE, TYPE B
2. 7" HMA PAVEMENT
   BASE COURSE: 5"
   SURFACE COURSE: 2"
3. 12" HMA PAVEMENT
   BASE COURSE: 9"
   BINDER COURSE 1½"
   SURFACE COURSE: 1½"

REMOVALS:

- R — 2¼" HMA SURFACE REMOVAL
- E — EXCAVATING AND GRADING EXISTING SHOULDER

PROPOSED PAVEMENT:

- P — ¾" HMA POLY LEVELING COURSE
  1½" HMA SURFACE COURSE
- S — 6" HMA SHOULDER
  BINDER COURSE: 4½"
  SURFACE COURSE: 1½"

ELA ROAD
STA. 90+69.0 TO 97+99.0

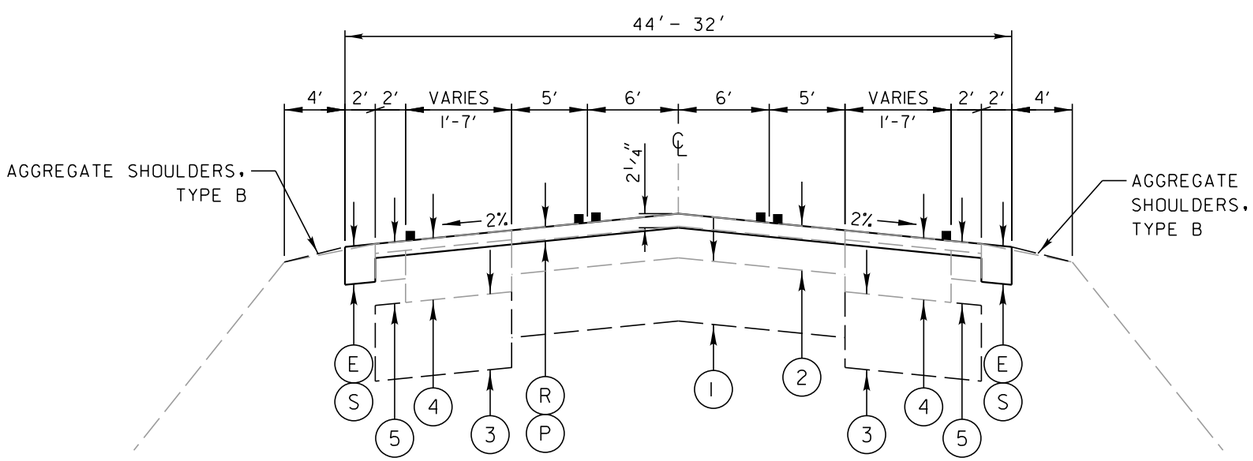

EXISTING PAVEMENT (FROM RECORDS):

1. 10" AGGREGATE SUBBASE, TYPE B
2. 7" HMA PAVEMENT
   BASE COURSE: 5"
   SURFACE COURSE: 2"
3. 12" AGGREGATE SUBBASE
4. 9¾" HMA PAVEMENT
   BASE COURSE: 8¼"
   SURFACE COURSE: 1½"
5. 6" HMA SHOULDER
   BINDER COURSE 4½"
   SURFACE COURSE: 1½"

REMOVALS:

- R — 2¼" HMA SURFACE REMOVAL
- E — EXCAVATING AND GRADING EXISTING SHOULDER

PROPOSED PAVEMENT:

- P — ¾" HMA POLY LEVELING COURSE
  1½" HMA SURFACE COURSE
- S — 6" HMA SHOULDER
  BINDER COURSE: 4½"
  SURFACE COURSE: 1½"

ELA ROAD
STA. 101+18.0 TO 105+50.0

REVISIONS / REMARKS					
NO.	DESCRIPTION	DATE	BY	SURVEYOR:	/
		/ /		DSGNR/LIAISON:	KDN
		/ /		PLOTTED BY:	hdl7512 2/18/2016

6" VERT 0 — SCALES HORIZ. 0 5 10

ELA ROAD RESURFACING

LakeCounty Division of Transportation

ELA ROAD RESURFACING
TYPICAL SECTIONS - RESURFACING

ROUTE	SECTION	SECTION NUMBER	SHEET	SHEETS
CH60	144	15-00144-21-RS	6	150

FILE NAME: U:\Design\Nauman\15-00144-21-RS Ela Rd Resurfacing\Plans\15-00144-21-RS.dgn

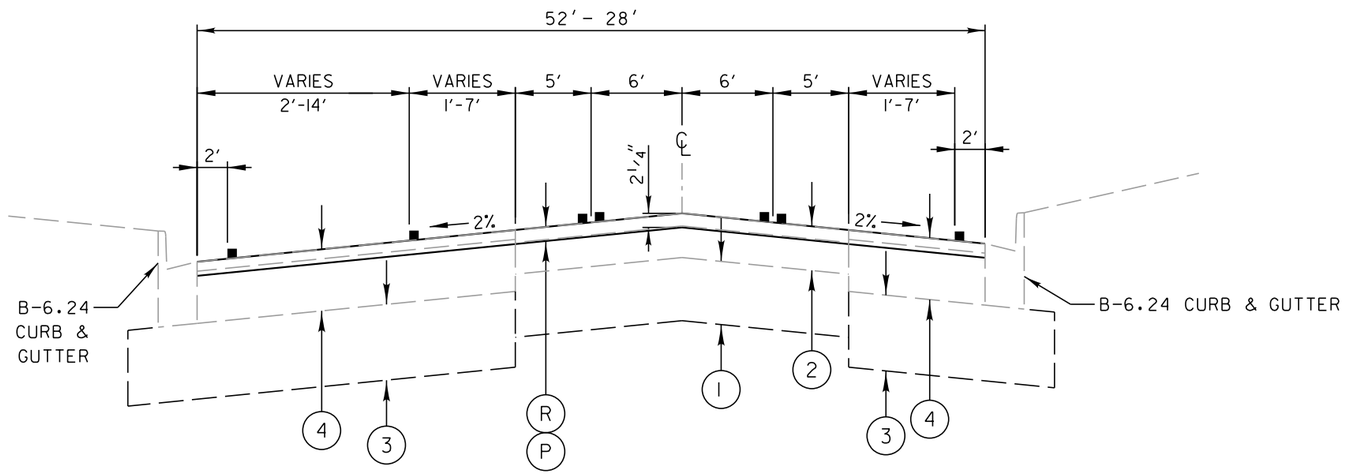

EXISTING PAVEMENT (FROM RECORDS):

(1) 10" AGGREGATE SUBBASE, TYPE B

(2) 7" HMA PAVEMENT
BASE COURSE: 5"
SURFACE COURSE: 2"

(3) 12" AGGREGATE SUBBASE

(4) 9¾" HMA PAVEMENT
BINDER COURSE 8¼"
SURFACE COURSE: 1½"

REMOVALS:

(R) 2¼" HMA SURFACE REMOVAL

PROPOSED PAVEMENT:

(P) ¾" HMA POLY LEVELING COURSE
1½" HMA SURFACE COURSE

ELA ROAD
STA. 105+50.0 TO 110+60.0

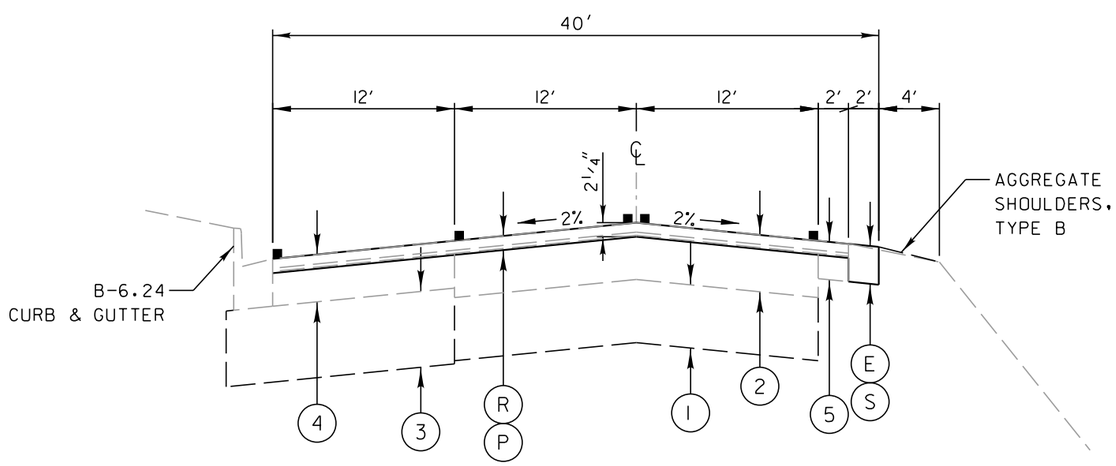

EXISTING PAVEMENT (FROM RECORDS):

(1) 10" AGGREGATE SUBBASE, TYPE B

(2) STA. 110+60.0 TO 114+47.0
9" HMA PAVEMENT
BASE COURSE: 7"
LEVELING BINDER: ½"
SURFACE COURSE: 1½"
STA. 114+47.0 TO 120+82.0
10½" HMA PAVEMENT
BASE COURSE: 8½"
LEVELING BINDER: ½"
SURFACE COURSE: 1½"

(3) 12" AGGREGATE SUBBASE

(4) 9¾" HMA PAVEMENT
BASE COURSE: 8½"
BINDER COURSE ½"
SURFACE COURSE: 1½"

(5) 6" HMA SHOULDER
BINDER COURSE: 4½"
SURFACE COURSE 1½"

REMOVALS:

(R) 2¼" HMA SURFACE REMOVAL

(E) EXCAVATING AND GRADING EXISTING SHOULDER

PROPOSED PAVEMENT:

(P) ¾" HMA POLY LEVELING COURSE
1½" HMA SURFACE COURSE

(S) 6" HMA SHOULDER
BINDER COURSE: 4½"
SURFACE COURSE: 1½"

ELA ROAD
STA. 110+60.0 TO 116+30.0

REVISIONS / REMARKS					
NO.	DESCRIPTION	DATE	BY	SURVEYOR:	/
		/ /		DSGNR/LIAISON:	KDN
		/ /		PLOTTED BY:	hdl7512 2/18/2016

6" VERT 0 — SCALES HORIZ. 0 5 10

ELA ROAD RESURFACING

LakeCounty Division of Transportation

ELA ROAD RESURFACING
TYPICAL SECTIONS - RESURFACING

ROUTE	SECTION	SECTION NUMBER	SHEET	SHEETS
CH60	144	15-00144-21-RS	7	150

FILE NAME: U:\Design\Nauman\15-00144-21-RS Ela Rd Resurfacing\Plans\15-00144-21-RS.dgn

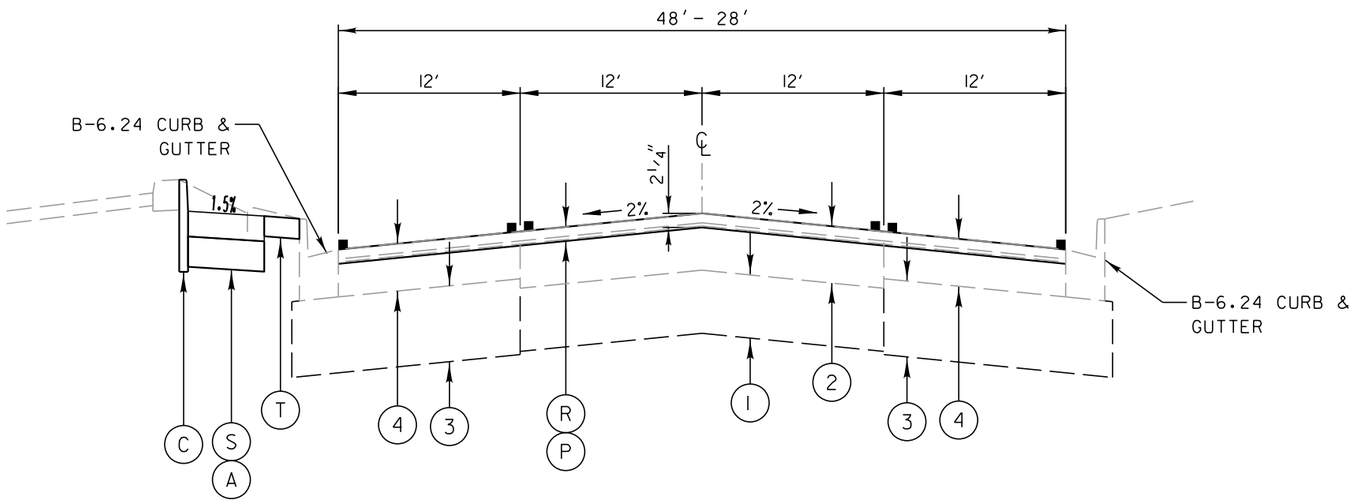

Proposed Sidewalk
Sta 118+75.00 to
Sta 120+29.73
See Sidewalk Typical
Section on sheet 9

EXISTING PAVEMENT (FROM RECORDS):

(1) 10" AGGREGATE SUBBASE, TYPE B

(2) 10½" HMA PAVEMENT
BASE COURSE: 8½"
LEVELING COURSE: ½"
SURFACE COURSE: 1½"

(3) 12" AGGREGATE SUBBASE

(4) 9¾" HMA PAVEMENT
BASE COURSE: 6"
BINDER COURSE ½"
SURFACE COURSE: 1½"

REMOVALS:

(R) 2¼" HMA SURFACE REMOVAL

PROPOSED PAVEMENT:

(P) ¾" HMA POLY LEVELING COURSE
1½" HMA SURFACE COURSE

PROPOSED SIDEWALK:

(S) 5" PORTLAND CEMENT CONCRETE SIDEWALK

(A) 4" AGGREGATE BASE COURSE, TYPE B

(T) 4" TOPSOIL, SODDING & EROSION CONTROL BLANKET

(C) CONCRETE CURB, TYPE B (SPECIAL)

ELA ROAD
STA. 116+30.0 TO 120+82.0

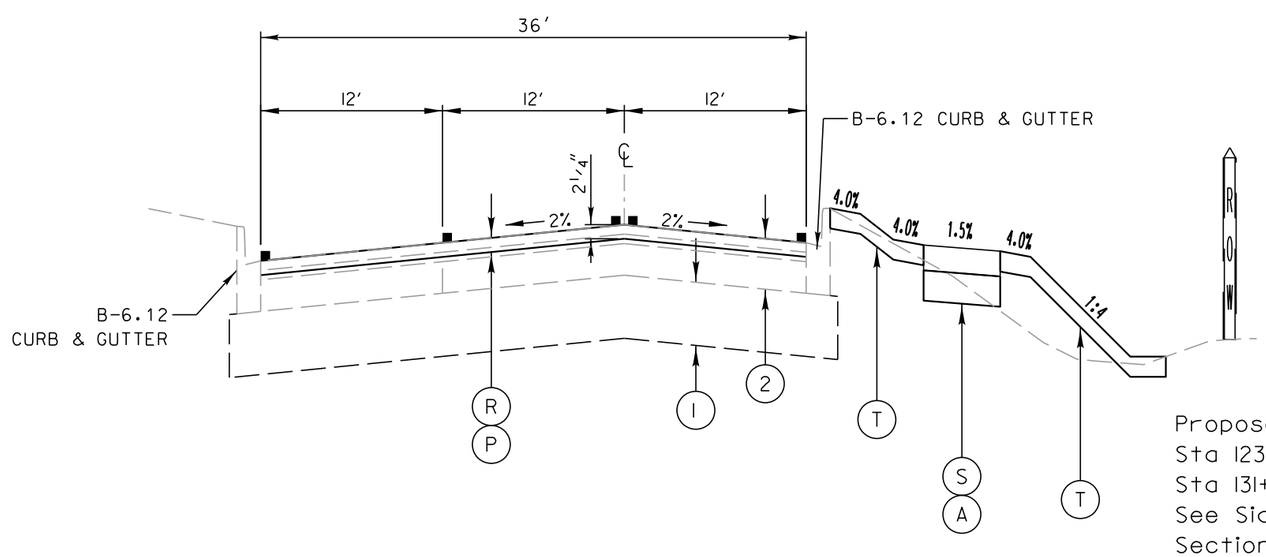

Proposed Sidewalk
Sta 123+25.00 to
Sta 131+68.72
See Sidewalk Typical
Sections on sheets 9-10

EXISTING PAVEMENT (FROM RECORDS):

(1) 10" AGGREGATE SUBBASE, TYPE B

(2) 8" HMA PAVEMENT
BASE COURSE: 5"
LEVELING COURSE: 1½"
SURFACE COURSE: 1½"

REMOVALS:

(R) 2¼" HMA SURFACE REMOVAL

PROPOSED PAVEMENT:

(P) ¾" HMA POLY LEVELING COURSE
1½" HMA SURFACE COURSE

PROPOSED SIDEWALK:

(S) 5" PORTLAND CEMENT CONCRETE SIDEWALK

(A) 4" AGGREGATE BASE COURSE, TYPE B

(T) 4" TOPSOIL, SODDING & EROSION CONTROL BLANKET

ELA ROAD
STA. 121+72.0 TO 129+84.5

REVISIONS / REMARKS					
NO.	DESCRIPTION	DATE	BY	SURVEYOR:	/
		/ /		DSGNR/LIAISON:	KDN
		/ /		PLOTTED BY:	hd17512 2/18/2016

6" VERT 0 — SCALES HORIZ. 0 5 10

ELA ROAD RESURFACING

LakeCounty Division of Transportation

ELA ROAD RESURFACING
TYPICAL SECTIONS - RESURFACING

ROUTE	SECTION	SECTION NUMBER	SHEET	SHEETS
CH60	144	15-00144-21-RS	8	150

FILE NAME: U:\Design\Nauman\15-00144-21-RS Ela Rd Resurfacing\Plans\15-00144-21-RS.dgn

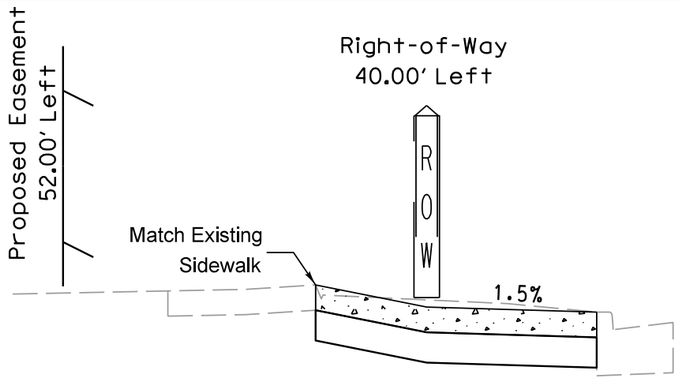

STA 118+75.00 TO 118+80.00

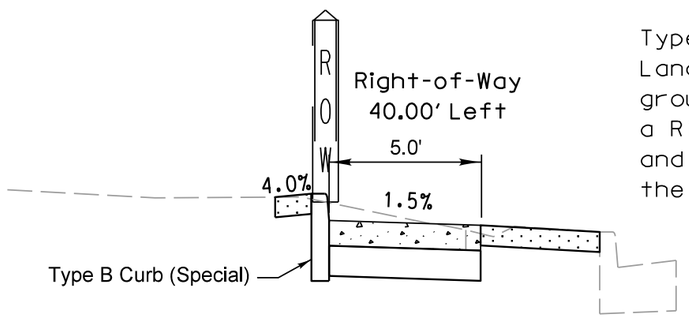

Type B Curb (Special) and the Landscaping to match existing ground will be constructed via a Right of Entry from McDonald's and with minimal impacts to the adjacent area.

STA 118+80.00 TO 119+86.65

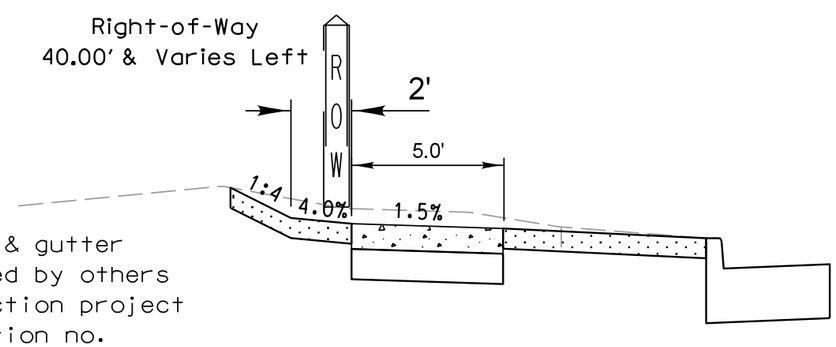

The proposed curb & gutter will be constructed by others under the intersection project let by IDOT. Section no. 02-00063-00-CH let 4/24/15 and currently under construction.

STA 119+86.65 TO 120.29.73

Topsoil & Sod depending on the slope and elevation of the adjacent land may not extend to the back of curb - see individul cross sections.

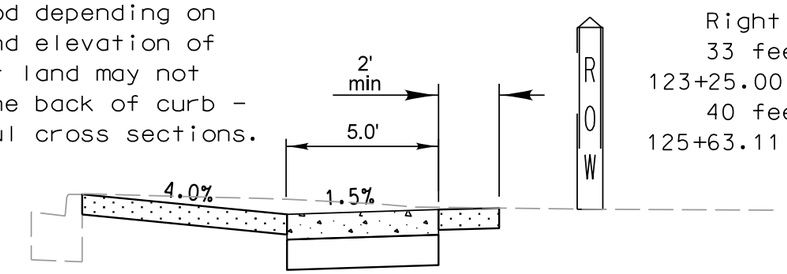

Right -of-Way
33 feet Right
123+25.00 - 125+63.11
40 feet Right
125+63.11 - 131+46.28

STA 123+25.00 TO 123+79.52

STA 124+24.19 TO 125+00.00

STA 129+75.00 TO 130+26.49

STA 130+85.00 TO 131+12.70

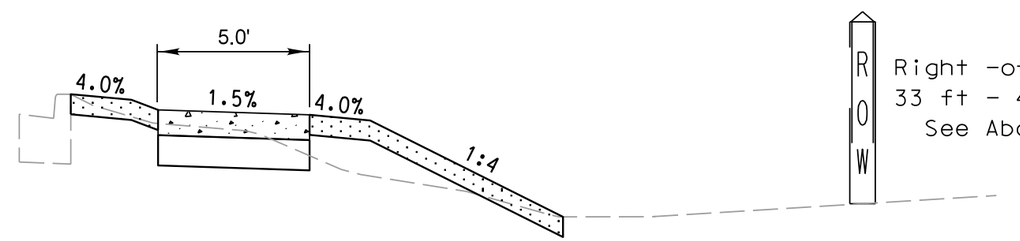

Right -of-Way
33 ft - 40 ft
See Above

STA 125+00.00 TO 126+65.00

STA 127+42.40 TO 129+75.00

LEGEND

5" PORTLAND CEMENT CONCRETE SIDEWALK

4" AGGREGATE BASE COURSE, TYPE B

4" TOPSOIL & SODDING

REVISIONS / REMARKS					
NO.	DESCRIPTION	DATE	BY	SURVEYOR:	__/__
		__/__/__		DSGNR/LIAISON:	
		__/__/__		PLOTTED BY:	hdrmc 2/18/2016

FILE NAME: U:\Design\Sullivan\Ela Rd Sidewalk\13-00103-18-SW TypSection.dgn

LakeCounty
Division of Transportation

ELA ROAD RESURFACING

TYPICAL SECTIONS - SIDEWALK

ROUTE	SECTION	SECTION NUMBER	SHEET	SHEETS
CH60	144	15-00144-21-RS	9	150

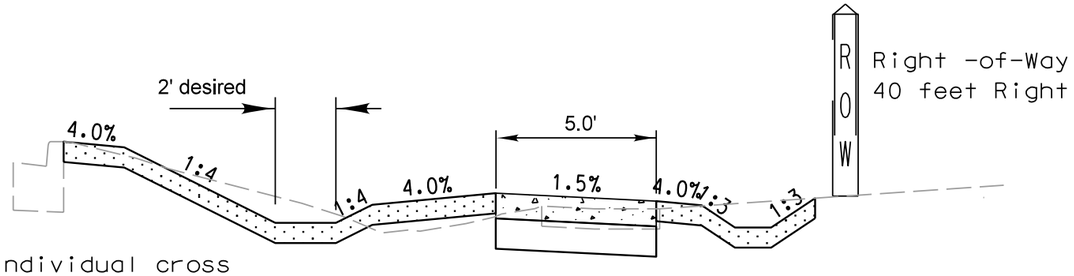

See individual cross sections for ditch locations, widths & inverts

STA 126+65.00 TO 127+42.40

Type B Curb
Left side of sidewalk
123+67.03 - 123+71.73
127+47.12 - 127+52.07
130+74.24 - 130+85.04
Right side of sidewalk
130+69.60 - 130+88.90

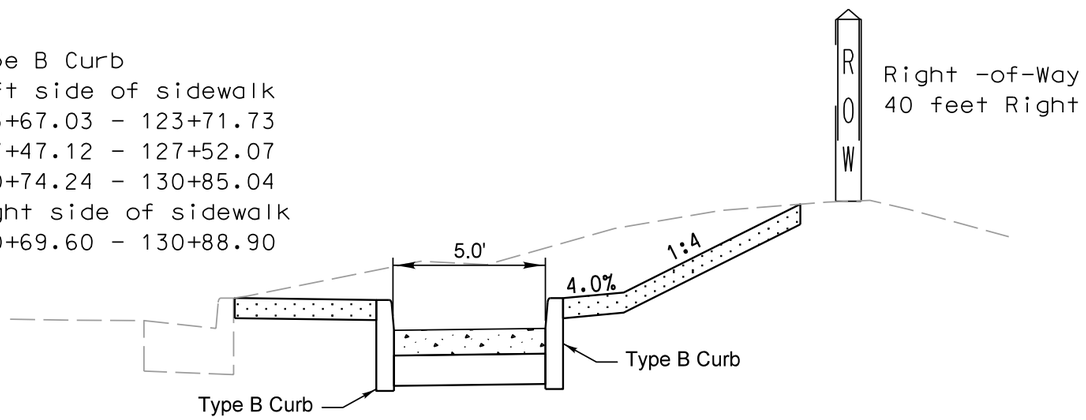

STA 130+67.60 TO 130+85.00

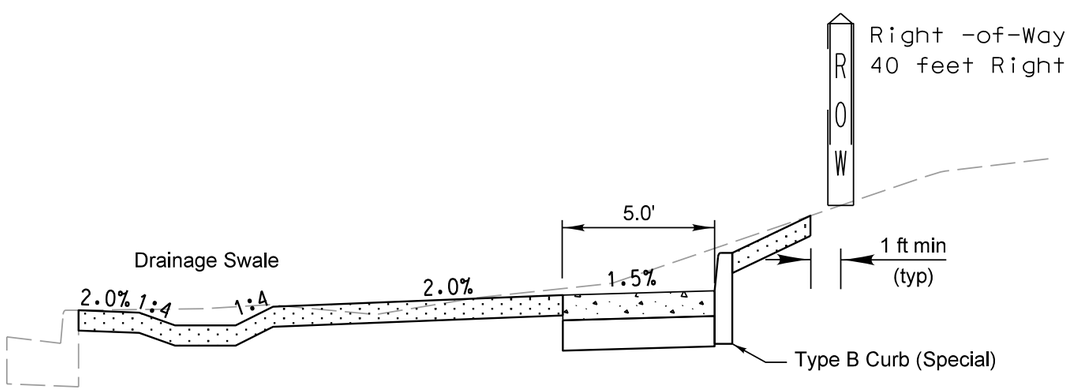

STA 131+12.70 TO 131+26.46

STA 131+26.46 TO 131+50.25

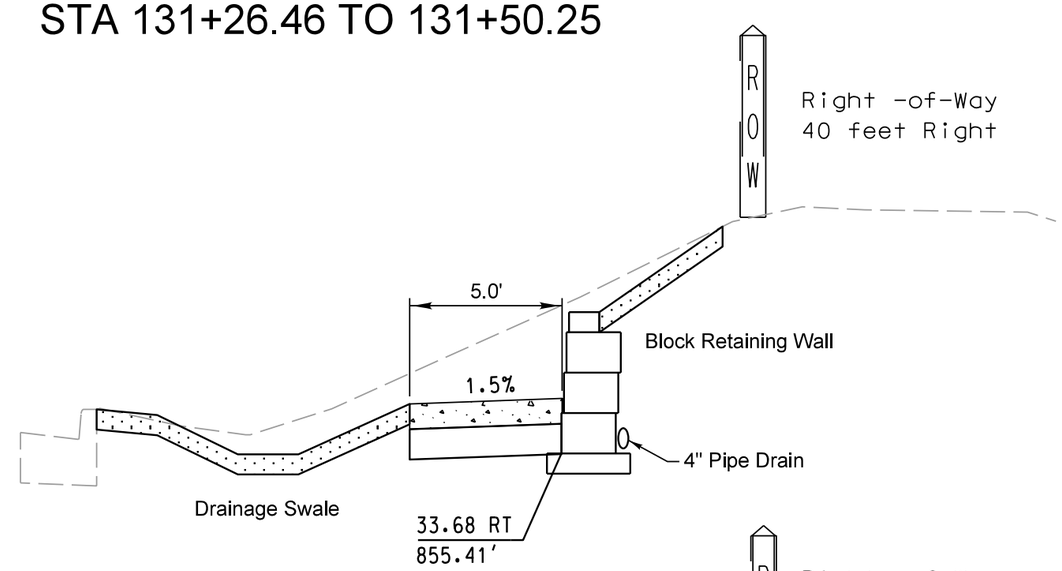

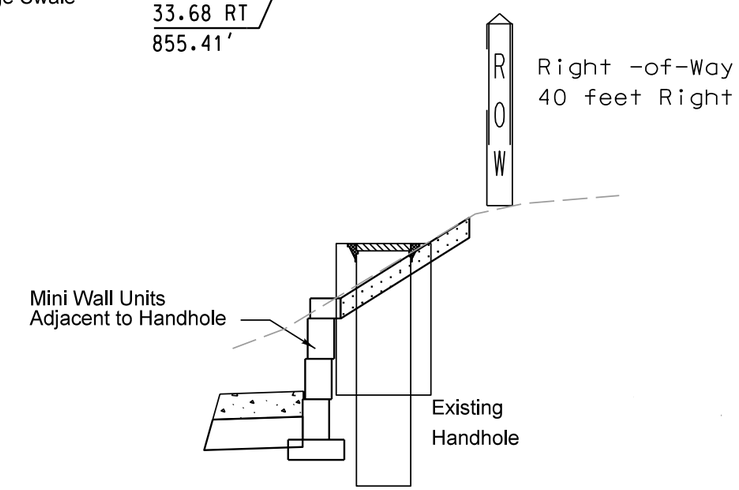

LEGEND

- 5" PORTLAND CEMENT CONCRETE SIDEWALK
- 4" AGGREGATE BASE COURSE, TYPE B
- 4" TOPSOIL & SODDING

REVISIONS / REMARKS					
NO.	DESCRIPTION	DATE	BY	SURVEYOR:	/
		/ /		DSGNR/LIAISON:	
		/ /		PLOTTED BY:	hdrmc 2/18/2016

LakeCounty
Division of Transportation

ELA ROAD RESURFACING
TYPICAL SECTIONS - SIDEWALK

ROUTE	SECTION	SECTION NUMBER	SHEET	SHEETS
CH60	144	15-00144-21-RS	10	150

FILE NAME: U:\Design\Sullivan\Ela Rd Sidewalk\13-00103-18-SW TypSection.dgn

1 SCHEDULE OF TREE & SHRUB REMOVAL

STATION	OFFSET (ft)	LEFT OR RIGHT	DESCRIPTION: TYPE	DESCRIPTION: SIZE (in)	20100110 TREE REMOVAL (6 TO 15 UNITS DIAMETER) (units)	K0026830 SHRUB REMOVAL (each)
118+85.54	39.2	LEFT	SHRUB	36.0		1.0
118+87.90	39.1	LEFT	SHRUB	36.0		1.0
118+90.62	39.0	LEFT	SHRUB	36.0		1.0
118+98.64	39.1	LEFT	SHRUB	36.0		1.0
119+01.36	39.3	LEFT	SHRUB	36.0		1.0
119+03.99	39.1	LEFT	SHRUB	36.0		1.0
119+32.86	40.9	LEFT	SHRUB	48.0		1.0
119+34.93	37.8	LEFT	SHRUB	48.0		1.0
119+37.47	40.3	LEFT	SHRUB	48.0		1.0
119+60.08	38.2	LEFT	SHRUB	36.0		1.0
119+63.01	38.2	LEFT	SHRUB	36.0		1.0
119+69.51	38.2	LEFT	SHRUB	36.0		1.0
119+72.07	38.1	LEFT	SHRUB	36.0		1.0
119+78.53	37.7	LEFT	SHRUB	36.0		1.0
119+81.36	37.9	LEFT	SHRUB	36.0		1.0
119+84.09	38.3	LEFT	SHRUB	36.0		1.0
129+34.93	40.0	RIGHT	EVERGREEN	10.0	10.0	
TOTAL TREE, SHRUB & STUMP REMOVAL					**10.0**	**16.0**

NOTE: SHRUBS FOR REMOVAL ARE DECIDIOUS

2 SCHEDULE OF TREE TRUNK PROTECTION; TREE ROOT PRUNING & TREE PRUNING

STATION	OFFSET (ft)	LEFT OR RIGHT	DESCRIPTION TYPE	DESCRIPTION SIZE (in)	20101100 TREE TRUNK PROTECTION (each)	20101100 TREE ROOT PRUNNING (each)	20101300 TREE PRUNNING (1 TO 10 INCH DIAMETER) (each)	20101350 TREE PRUNNING (OVER 10 INCH DIAMETER) (each)
TREE TRUNK PROTECTION & ROOT PRUNING								
119+98.70	47.5	LEFT	OTHER	9.0	1.0	1.0		
123+15.04	33.2	RIGHT	MAPLE	18.0		1.0		1.0
123+40.61	33.9	RIGHT	MAPLE	21.0		1.0		1.0
125+23.06	27.7	RIGHT	MAPLE	10.0	1.0	1.0	1.0	
125+64.38	36.8	RIGHT	CEDAR	11.0	1.0			
125+69.65	36.6	RIGHT	CEDAR	11.0	1.0			
125+77.85	36.4	RIGHT	BOX ELDER	15.0	1.0			
126+53.33	39.5	RIGHT	PINE	5.0	1.0	1.0		
126+62.69	42.3	RIGHT	PINE	4.5		1.0		
126+72.98	40.4	RIGHT	PINE	7.0	1.0	1.0		
128+71.09	39.6	RIGHT	EVERGREEN	10.0	1.0	1.0		
129+15.43	35.0	RIGHT	EVERGREEN	8.0	1.0	1.0		
129+60.03	39.6	RIGHT	EVERGREEN	12.0	1.0	1.0		
129+91.80	38.7	RIGHT	OTHER	12.0	1.0	1.0		
TOTAL TREE TRUNK PROTECTION & ROOT PRUNING					**11.0**	**11.0**	**1.0**	**2.0**

NOTES: Tree root pruning for trees located outside the right of way will be done one foot inside the right of way line.

Trees scheduled for trunk protection & root pruning are identified on the cross sections with the following in the description label:
TTP = Tree Trunk Protection
TRP = Tree Root Pruning
TP = Tree Pruning

4 SCHEDULE OF EXCAVATING AND GRADING EXISTING SHOULDER

FROM	TO	LEFT OR RIGHT	LENGTH (FEET)	QUANTITY (UNIT)
80+31.45	93+70.41	LT	1339.0	13.4
94+67.81	105+63.75	LT	1095.9	11.0
112+23.94	112+88.08	LT	64.1	0.6
113+12.40	113+93.62	LT	81.2	0.8
80+45.25	92+09.30	RT	1164.1	11.6
99+16.50	102+27.88	RT	311.4	3.1
105+37.54	106+67.54	RT	130.0	1.3
110+59.64	111+17.06	RT	57.4	0.6
111+90.34	113+45.06	RT	154.7	1.5
113+69.20	118+11.53	RT	442.3	4.4
PAY CODE 20200600			**SUBTOTAL**	**48.4**
			5% CONTINGENCY	2.4
			TOTAL	**50.8**

6 SCHEDULE OF POROUS GRANULAR BACKFILL & GEOTECHNICAL FABRIC

STATION	LENGTH (ft)	PGB CROSS SECTION AREA (sq ft)	PGB VOLUME (cu ft)	PGB VOLUME (cu yd)
WALL BACKFILL				
131+26.46		2.9		
131+27.94	1.48	2.9	4.3	0.2
131+30.00	2.06	4.3	7.4	0.3
131+35.00	5.00	4.9	23.0	0.9
131+40.00	5.00	4.9	24.5	0.9
131+45.00	5.00	3.9	22.0	0.8
131+50.00	5.00	2.9	17.0	0.6
131+50.25	0.25	2.9	0.7	0.0
TOTAL				**3.7**

5 SCHEDULE OF DRAINAGE ITEMS

FROM STATION	TO STATION	LEFT OR RIGHT	OFFSET (ft)	20800150 TRENCH BACKFILL (cu yd)	50105220 PIPE CULVERT REMOVAL (ft)	542C0220 PIPE CULVERTS, CLASS C, TYPE 1 15" (ft)	54215550 METAL END SECTIONS 15" (each)	550B0050 STORM SEWERS, CLASS B, TYPE 1 12" (ft)	60236200 INLETS, TYPE A, TYPE 8 GRATE (each)	60255500 MANHOLES TO BE ADJUSTED (each)	X0324380 REMOVE AND REPLACE LID (each)	X6013600 PIPE UNDERDRAINS 4" (MODIFIED) (ft)
126+50.00		RIGHT	31.7						1.0			
126+50.00	126+84.71	RIGHT		0.5				34.0				
127+61.22		RIGHT	19.6							1.0	1.0	
128+19.92	128+39.96	RIGHT	36.3 - 37		20.1							
128+20.00		RIGHT					1.0					
128+20.00	128+43.00	RIGHT	35.75	1.5		23.0						
128+43.00		RIGHT					1.0					
131+26.80	131+32.40	RIGHT										5.7
131+32.40	131+32.40	RIGHT										11.1
131+32.40	131+50.25	RIGHT										19.7
DRAINAGE ITEM TOTALS				**2.0**	**20.1**	**23.0**	**2.0**	**34.0**	**1.0**	**1.0**	**1.0**	**36.5**

3

SCHEDULE OF EARTHWORK

STATION	LENGTH (ft)	CUT CROSS SECTION AREA (sq ft)	CUT VOLUME (cu ft)	FILL CROSS SECTION AREA (sq ft)	FILL VOLUME (cu ft)
Adjacent to McDonalds Property					
118+75.00		8.9		0.0	
118+80.00	5.00	10.8	49.3	0.0	0.0
118+84.15	4.15	8.1	39.2	0.0	0.0
119+00.00	15.85	7.4	122.8	0.0	0.0
119+14.10	14.10	7.6	105.8	0.0	0.0
119+25.00	10.90	7.3	81.2	0.0	0.0
119+50.00	25.00	7.8	188.8	0.0	0.0
119+56.55	6.55	8.0	51.7	0.0	0.0
119+75.00	18.45	9.3	159.6	0.0	0.0
119+86.65	11.65	10.2	113.6	0.0	0.0
120+00.00	13.35	10.6	138.8	0.0	0.0
120+05.20	5.20	28.2	100.9	0.0	0.0
120+25.00	19.80	4.1	319.8	0.0	0.0
120+28.84	3.84	9.9	26.9	0.0	0.0
Subtotal McDonalds Property			**1498.3**		**0.0**
North of IL Route 12 to Terrace Lane					
123+25.00		7.6		0.0	
123+50.00	25.0	12.0	245.0	0.0	0.0
123+55.00	5.0	11.1	57.8	0.0	0.0
123+60.00	5.0	9.1	50.5	0.0	0.0
123+65.00	5.0	10.1	48.0	0.0	0.0
123+70.00	5.0	9.4	48.8	0.0	0.0
123+75.00	5.0	6.9	40.8	0.0	0.0
123+80.00	5.0	3.2	25.3	0.0	0.0
Subtotal IL Route 12 - Terrace Ln			**516.0**		**0.0**

STATION	LENGTH (ft)	CUT CROSS SECTION AREA (sq ft)	CUT VOLUME (cu ft)	FILL CROSS SECTION AREA (sq ft)	FILL VOLUME (cu ft)	UNSUITABLE CROSS SECTION AREA (sq ft)	UNSUITABLE VOLUME (cu ft)
Terrace Lane to Pine Avenue							
124+24.20		5.1		0.0		0.0	
124+25.00	0.8	5.1	4.1	0.0	0.0	0.0	0.0
124+30.00	5.0	6.9	30.0	0.0	0.0	0.0	0.0
124+35.00	5.0	6.7	34.0	0.0	0.0	0.0	0.0
124+40.00	5.0	7.3	35.0	0.0	0.0	0.0	0.0
124+45.00	5.0	5.7	32.5	0.0	0.0	0.0	0.0
124+50.00	5.0	6.2	29.8	0.0	0.0	0.0	0.0
124+75.00	25.0	6.3	156.3	0.0	0.0	0.0	0.0
125+00.00	25.0	5.2	143.8	0.0	0.0	0.0	0.0
125+25.00	25.0	3.9	113.8	0.3	3.8	0.0	0.0
125+50.00	25.0	4.3	102.5	0.8	13.8	1.3	16.3
125+75.00	25.0	3.7	100.0	2.0	35.0	1.3	32.5
126+00.00	25.0	4.3	100.0	1.4	42.5	1.3	32.5
126+25.00	25.0	4.5	110.0	0.5	23.8	1.3	32.5
126+50.00	25.0	11.6	201.3	0.1	7.5	1.3	32.5
126+55.00	5.0	10.0	54.0	0.2	0.8	1.3	6.5
126+60.00	5.0	8.1	45.3	0.3	1.3	1.3	6.5
126+65.00	5.0	10.7	47.0	0.9	3.0	1.3	6.5
126+70.00	5.0	9.6	50.8	0.6	3.8	1.3	6.5
126+75.00	5.0	8.7	45.8	0.1	1.8	1.3	6.5
126+80.00	5.0	7.6	40.8	0.1	0.5	1.3	6.5
126+85.00	5.0	8.9	41.3	0.0	0.3	1.3	6.5
126+90.00	5.0	8.7	44.0	0.0	0.0	1.3	6.5
126+95.00	5.0	15.0	59.3	0.0	0.0	6.3	19.0
127+00.00	5.0	12.5	68.8	0.0	0.0	1.5	19.5
127+05.00	5.0	8.9	53.5	0.3	0.8	1.9	8.5
127+08.55	3.5	8.0	30.0	0.3	1.1	0.3	3.9
Subtotal Terrace Ln - Pine Ave			**1773.1**		**139.3**		**249.2**

STATION	LENGTH (ft)	CUT CROSS SECTION AREA (sq ft)	CUT VOLUME (cu ft)	FILL CROSS SECTION AREA (sq ft)	FILL VOLUME (cu ft)	UNSUITABLE CROSS SECTION AREA (sq ft)	UNSUITABLE VOLUME (cu ft)
Pine Avenue to Maple Avenue							
127+40.00		0.0		0.0		0.0	
127+45.00	5.0	7.0	17.5	0.0	0.0	0.0	0.0
127+50.00	5.0	5.9	32.3	0.4	1.0	0.0	0.0
127+55.00	5.0	2.6	21.3	1.6	5.0	0.0	0.0
127+60.00	5.0	3.7	15.8	2.3	9.8	0.0	0.0
127+65.00	5.0	2.1	14.5	6.0	20.8	0.0	0.0
127+70.00	5.0	3.1	13.0	6.0	30.0	0.0	0.0
127+75.00	5.0	3.6	16.8	6.1	30.3	0.0	0.0
127+80.00	5.0	3.6	18.0	4.7	27.0	0.0	0.0
127+85.00	5.0	3.6	18.0	4.0	21.8	0.0	0.0
127+90.00	5.0	3.5	17.8	5.4	23.5	0.0	0.0
127+95.00	5.0	4.0	18.8	5.2	26.5	0.0	0.0
128+00.00	5.0	3.9	19.8	5.6	27.0	0.0	0.0
128+05.00	5.0	4.0	19.8	6.9	31.3	0.0	0.0
128+10.00	5.0	5.2	23.0	7.7	36.5	0.0	0.0
128+15.00	5.0	4.6	24.5	7.4	37.8	0.0	0.0
128+20.00	5.0	7.1	29.3	3.1	26.3	1.2	3.0
128+25.00	5.0	13.2	50.8	0.0	7.8	6.4	19.0
128+31.50	6.5	13.6	87.1	0.0	0.0	6.9	43.2
128+38.40	6.9	13.7	94.2	0.0	0.0	7.0	48.0
128+50.00	11.6	7.2	121.2	4.2	24.4	0.8	45.2
128+75.00	25.0	2.7	123.8	2.7	86.3	1.3	26.3
129+00.00	25.0	2.7	67.5	1.9	57.5	1.3	32.5
129+25.00	25.0	3.3	75.0	1.9	47.5	1.4	33.8
129+50.00	25.0	5.0	103.8	1.5	42.5	1.4	35.0
129+75.00	25.0	5.9	136.3	0.0	18.8	0.0	17.5
130+00.00	25.0	7.3	165.0	0.0	0.0	0.0	0.0
130+05.00	5.0	7.5	37.0	0.0	0.0	0.0	0.0
130+10.00	5.0	7.3	37.0	0.0	0.0	0.0	0.0
130+15.00	5.0	7.1	36.0	0.0	0.0	0.0	0.0
130+20.00	5.0	9.6	41.8	0.0	0.0	0.0	0.0
130+25.00	5.0	7.0	41.5	0.0	0.0	0.0	0.0
130+26.50	1.5	7.0	10.5	0.0	0.0	0.0	0.0
Subtotal Pine Ave - Maple Ave			**1548.0**		**638.9**		**303.4**

STATION	LENGTH (ft)	CUT CROSS SECTION AREA (sq ft)	CUT VOLUME (cu ft)	FILL CROSS SECTION AREA (sq ft)	FILL VOLUME (cu ft)
Maple Avenue to IL Route 22					
130+67.60		6.9		0.0	
130+70.00	2.4	6.9	16.6	0.0	0.0
130+75.00	5.0	15.3	55.5	0.0	0.0
130+80.00	5.0	23.5	97.0	0.0	0.0
130+85.00	5.0	25.8	123.3	0.0	0.0
130+90.00	5.0	26.3	130.3	0.0	0.0
130+95.00	5.0	16.7	107.5	0.0	0.0
131+00.00	5.0	11.8	71.3	0.0	0.0
131+05.00	5.0	9.7	53.8	0.0	0.0
131+10.00	5.0	9.1	47.0	0.0	0.0
131+15.00	5.0	13.3	56.0	0.0	0.0
131+20.00	5.0	14.3	69.0	0.0	0.0
131+25.00	5.0	14.4	71.8	0.0	0.0
131+30.00	5.0	24.0	96.0	0.0	0.0
131+35.00	5.0	28.5	131.3	0.0	0.0
131+40.00	5.0	33.7	155.5	0.0	0.0
131+45.00	5.0	19.9	134.0	0.0	0.0
131+50.00	5.0	13.4	83.3	0.0	0.0
Subtotal Maple Ave - IL Route 22			**1498.8**		**0.0**
Subtotal McDonalds Property			**1498.3**		**0.0**
Subtotal IL Route 12 - Terrace Ln			**516.0**		**0.0**
Subtotal Terrace Ln - Pine Ave			**1773.1**		**139.3**
Subtotal Pine Ave - Maple Ave			**1548.0**		**638.9**
SUBTOTALS EARTHWORK			**6834.2**		**778.2**

BORROW EXCAVATION (+) OR EXCESS MATERIAL (-)
(ASSUMED 20% SHRINKAGE)

FILL REQUIRED	**28.8**	**x 1.2**	**=**	**34.6 cu yd**
CUT - UNSUIT	**253.1**	**-11.2**		**241.9 cu yd**
BORROW/EXCESS	**34.6**	**-241.9**		**-207.3 cu yd**
CONTINGENCY +10%	**253.1**	**x 1.1**	**=**	**278.4 cu yd**

7A — SCHEDULE OF FURNISH AND PLACE TOPSOIL 4"

LEFT (WEST) SIDE OF PROPOSED SIDEWALK

STATION	LENGTH (ft)	CROSS SECTION WIDTH (ft)	CROSS SECTION AREA (sq ft)	TOPSOIL QUANTITY (sq yd)
McDonalds Easement				
118+40.65		2.0		
118+54.92	14.3	2.0	28.5	3.2
119+15.89		1.2		
119+25.00	9.1	1.2	10.9	1.2
119+50.00	25.0	1.5	33.6	3.7
119+54.61	4.6	1.5	6.9	0.8
119+88.54		4.0	0.0	0.0
120+00.00	11.5	4.0	45.8	5.1
120+05.20	5.2	5.1	23.8	2.6
120+25.00	19.8	3.0	80.1	8.9
120+27.96	3.0	4.3	10.7	1.2
TOPSOIL AREA - McDonalds Easement				**26.7**
North of IL Route 12 to Terrace Lane				
123+25.00		9.3		
123+50.00	25.0	8.8	225.9	25.1
123+55.00	5.0	8.1	42.1	4.7
123+60.00	5.0	6.8	37.1	4.1
123+65.00	5.0	4.8	28.8	3.2
123+70.00	5.0	2.0	16.9	1.9
123+71.71	1.7	0.0	1.7	0.2
TOPSOIL AREA - IL Route 12 to Terrace Lane				**39.2**
Terrace Lane to Pine Avenue				
124+29.62		0.0		
124+30.00	0.4	0.3	0.1	0.0
124+35.00	5.0	3.4	9.3	1.0
124+40.00	5.0	5.9	23.2	2.6
124+45.00	5.0	2.0	19.6	2.2
124+50.00	5.0	2.0	10.0	1.1
124+75.00	25.0	2.0	50.0	5.6
125+00.00	25.0	3.4	67.0	7.4
125+25.00	25.0	2.9	78.8	8.8
125+50.00	25.0	2.9	73.3	8.1
125+75.00	25.0	2.9	72.5	8.1
126+00.00	25.0	2.8	71.5	7.9
126+25.00	25.0	2.8	70.9	7.9
126+50.00	25.0	5.7	106.1	11.8
126+55.00	5.0	7.4	32.7	3.6
126+60.00	5.0	9.6	42.6	4.7
126+65.00	5.0	12.2	54.6	6.1
126+70.00	5.0	14.3	66.2	7.4
126+75.00	5.0	15.8	75.1	8.3
126+80.00	5.0	16.3	80.2	8.9
126+85.00	5.0	15.8	80.3	8.9
126+90.00	5.0	14.1	74.7	8.3
126+95.00	5.0	11.4	63.7	7.1
127+00.00	5.0	7.8	48.0	5.3
127+05.00	5.0	2.0	24.6	2.7
127+06.25	1.3	0.0	1.3	0.1
TOPSOIL AREA - Terrace Lane to Pine Ave				**144.0**

RIGHT (EAST) SIDE OF PROPOSED SIDEWALK

STATION	LENGTH (ft)	CROSS SECTION WIDTH (ft)	CROSS SECTION AREA (sq ft)	TOPSOIL QUANTITY (sq yd)
Pine Avenue to Maple Avenue				
127+47.12		2.6		
127+50.00	2.9	5.6	11.8	1.3
127+55.00	5.0	9.1	36.8	4.1
127+60.00	5.0	10.8	49.8	5.5
127+65.00	5.0	9.6	51.1	5.7
127+70.00	5.0	8.6	45.7	5.1
127+75.00	5.0	7.2	39.6	4.4
127+80.00	5.0	6.2	33.4	3.7
127+85.00	5.0	5.8	30.0	3.3
127+90.00	5.0	5.8	29.1	3.2
127+95.00	5.0	6.0	29.5	3.3
128+00.00	5.0	6.8	32.0	3.6
128+05.00	5.0	7.7	36.4	4.0
128+10.00	5.0	7.3	37.5	4.2
128+15.00	5.0	6.6	34.7	3.9
128+20.00	5.0	5.9	31.3	3.5
128+23.60	3.6	++	14.2	1.6
128+40.21		++		
128+50.00	9.8	4.0	36.4	4.0
128+75.00	25.0	5.0	112.3	12.5
129+00.00	25.0	5.0	125.0	13.9
129+25.00	25.0	5.1	126.0	14.0
129+50.00	25.0	5.1	126.4	14.0
129+75.00	25.0	8.1	164.1	18.2
130+00.00	25.0	10.4	231.5	25.7
130+05.00	5.0	9.3	49.4	5.5
130+10.00	5.0	7.7	42.7	4.7
130+15.00	5.0	5.6	33.4	3.7
130+20.00	5.0	2.6	20.5	2.3
130+22.86	2.9	0.0	3.7	0.4
TOPSOIL AREA - Pine Ave to Maple Ave				**179.3**
Maple Avenue to IL Route 22				
130+74.24		0.0		
130+75.00	0.8	1.8	0.7	0.1
130+80.00	5.0	4.7	16.2	1.8
130+85.00	5.0	7.3	29.8	3.3
130+90.00	5.0	10.0	43.2	4.8
130+95.00	5.0	4.6	36.6	4.1
131+00.00	5.0	2.2	16.9	1.9
131+05.00	5.0	4.2	15.9	1.8
131+10.00	5.0	3.6	19.6	2.2
131+15.00	5.0	16.2	49.5	5.5
131+20.00	5.0	16.0	80.4	8.9
131+25.00	5.0	14.5	76.2	8.5
131+30.00	5.0	12.5	67.6	7.5
131+35.00	5.0	10.3	57.1	6.3
131+40.00	5.0	8.2	46.4	5.2
131+45.00	5.0	5.8	35.1	3.9
131+48.44	3.4	0.0	10.0	1.1
TOPSOIL AREA - Maple Ave to IL Route 22				**66.8**
SUBTOTAL TOPSOIL AREAS ALONG THE WEST SIDE OF THE PROPOSED SIDEWALK				**456.0**

STATION	LENGTH (ft)	CROSS SECTION WIDTH (ft)	CROSS SECTION AREA (sq ft)	TOPSOIL QUANTITY (sq yd)
McDonalds Easement				
118+39.32		2.0		
118+53.49	14.2	2.0	28.3	3.1
118+95.65		2.0		
119+00.00	4.4	2.3	9.4	1.0
119+14.10	14.1	3.3	39.5	4.4
119+25.00	10.9	3.9	39.3	4.4
119+50.00	25.0	5.4	116.1	12.9
119+56.55	6.5	5.8	36.4	4.0
119+75.00	18.5	7.0	118.1	13.1
119+86.65	11.6	7.7	85.7	9.5
120+00.00	13.4	6.7	95.9	10.7
120+05.20	5.2	6.2	33.4	3.7
120+25.00	19.8	3.8	98.7	11.0
120+29.73	4.7	4.3	19.3	2.1
TOPSOIL AREA - McDonalds Easement				**80.0**
North of IL Route 12 to Terrace Lane				
123+25.00		2.0		
123+50.00	25.0	2.9	61.5	6.8
123+55.00	5.0	3.7	16.5	1.8
123+60.00	5.0	2.0	14.2	1.6
123+65.00	5.0	4.0	15.0	1.7
123+70.00	5.0	4.0	20.0	2.2
123+75.00	5.0	4.0	20.0	2.2
123+80.00	5.0	7.1	27.6	3.1
123+81.82	1.8	2.0	8.2	0.9
TOPSOIL AREA - IL Route 12 to Terrace Lane				**19.4**
Terrace Lane to Pine Avenue				
124+18.80		++		
124+25.00	6.2	8.7	33.1	3.7
124+30.00	5.0	2.8	28.8	3.2
124+35.00	5.0	2.3	12.8	1.4
124+40.00	5.0	2.4	11.7	1.3
124+45.00	5.0	2.4	12.0	1.3
124+50.00	5.0	3.7	15.2	1.7
124+75.00	25.0	2.0	71.3	7.9
125+00.00	25.0	2.7	58.8	6.5
125+25.00	25.0	3.8	81.0	9.0
125+50.00	25.0	6.5	128.5	14.3
125+75.00	25.0	8.4	185.5	20.6
126+00.00	25.0	8.1	205.9	22.9
126+25.00	25.0	5.2	166.6	18.5
126+50.00	25.0	10.8	200.3	22.3
126+55.00	5.0	9.7	51.3	5.7
126+60.00	5.0	8.7	45.9	5.1
126+65.00	5.0	7.2	39.6	4.4
126+70.00	5.0	5.2	31.0	3.4
126+75.00	5.0	3.8	22.6	2.5
126+80.00	5.0	2.8	16.4	1.8
126+85.00	5.0	2.2	12.3	1.4
126+90.00	5.0	2.0	10.4	1.2
126+94.80	4.8	++	13.2	1.5
126+95.00	0.2	NO TOPSOIL - SIDEWALK		
126+99.80	4.8	11.9		0.0
127+00.00	0.2	12.9	2.5	0.3
127+01.80	1.8	10.1	20.7	2.3
127+10.80	9.0	3.9	63.0	7.0
TOPSOIL AREA - Terrace Lane to Pine Ave				**171.1**

STATION	LENGTH (ft)	CROSS SECTION WIDTH (ft)	CROSS SECTION AREA (sq ft)	TOPSOIL QUANTITY (sq yd)
Pine Avenue to Maple Avenue				
127+41.02		++		
127+45.00	4.0	3.2	11.2	1.2
127+50.00	5.0	6.3	11.2	1.2
127+55.00	5.0	4.2	11.2	1.2
127+60.00	5.0	6.5	11.2	1.2
127+65.00	5.0	7.9	11.2	1.2
127+70.00	5.0	9.4	43.2	4.8
127+75.00	5.0	10.7	50.2	5.6
127+80.00	5.0	10.9	54.0	6.0
127+85.00	5.0	11.0	54.7	6.1
127+90.00	5.0	11.0	54.8	6.1
127+95.00	5.0	11.9	57.1	6.3
128+00.00	5.0	10.6	56.1	6.2
128+05.00	5.0	11.0	53.8	6.0
128+10.00	5.0	11.7	56.7	6.3
128+15.00	5.0	11.9	59.0	6.6
128+20.00	5.0	11.8	59.1	6.6
128+23.85	3.9	12.2	46.1	5.1
128+39.96		12.2		
128+50.00	10.0	12.2	122.5	13.6
128+75.00	25.0	7.9	250.6	27.8
129+00.00	25.0	4.1	148.9	16.5
129+25.00	25.0	3.8	98.1	10.9
129+50.00	25.0	3.3	88.9	9.9
129+75.00	25.0	2.0	66.5	7.4
130+00.00	25.0	4.7	83.1	9.2
130+05.00	5.0	2.9	18.9	2.1
130+10.00	5.0	2.0	12.3	1.4
130+15.00	5.0	2.0	10.0	1.1
130+20.00	5.0	4.7	16.8	1.9
130+25.00	5.0	5.9	3.8	0.4
130+29.21	4.2	++	17.0	1.9
TOPSOIL AREA - Pine Ave to Maple Ave				**177.8**
Maple Avenue to IL Route 22				
130+65.62		0.0		
130+70.00	4.4	4.2	9.2	1.0
130+75.00	5.0	5.2	23.5	2.6
130+80.00	5.0	7.8	32.6	3.6
130+85.00	5.0	6.9	36.8	4.1
130+90.00	5.0	7.8	36.7	4.1
130+95.00	5.0	6.5	35.7	4.0
131+00.00	5.0	4.9	28.6	3.2
131+05.00	5.0	3.7	21.6	2.4
131+10.00	5.0	2.2	14.8	1.6
131+15.00	5.0	2.4	11.6	1.3
131+20.00	5.0	2.6	12.5	1.4
131+25.00	5.0	2.8	13.4	1.5
131+30.00	5.0	3.4	15.4	1.7
131+35.00	5.0	4.1	18.6	2.1
131+40.00	5.0	4.3	20.8	2.3
131+45.00	5.0	4.3	21.3	2.4
131+50.00	5.0	2.9	12.3	1.4
131+64.14	14.1	++	39.3	4.4
TOPSOIL AREA - Maple Ave to IL Route 22				**45.0**
SUBTOTAL TOPSOIL AREAS ALONG THE EAST SIDE OF THE PROPOSED SIDEWALK				**493.4**
TOTAL TOPSOIL AREAS				**1039.7**

AREAS FROM RESURFACING SECTIONS

ACCESS QUANTITIES		
MINOR ACCESS AT 10 SQ YD PER ENTRANCE (LC4110)	2 EACH	20.0
MAJOR ACCESS AT 15 SQ YD PER ENTRANCE (LC4111)	4 EACH	60.0

OUTLET FOR CONCRETE CURB AND GUTTER TYPE B-6.24				
105+29.94		2.0		
105+76.50	46.6	2.0	93.1	10.3
SUBTOTAL RESURFACING AREAS				**90.3**

'++ IRREGULAR AREA

7 — SCHEDULE OF FURNISHING AND PLACING TOPSOIL 4"; SODDING; & RELATED ITEMS

TOTAL AREA FURNISHING AND PLACING TOPSOIL 4" (sq yd) FROM TOPSOIL SCHEDULE	**1039.7**
+10% CONTINGENCY	104.0
TOTAL AREA FURNISHING AND PLACING TOPSOIL 4" (sq yd)	**1143.6**
TOTAL SODDING AREA (sq yd)	**1143.6**
NITROGEN FERTILIZER NUTRIENT @ .02 lb/sq yd (lb)	**23.0**
POTASSIUM FERTILIZER NUTRIENT @ .02 lb/sq yd (lb)	**23.0**
SUPPLEMENTAL WATERING @ 3 gal/sq yd (unit) [3 APPLICATIONS]	**10.0**

10 — SCHEDULE OF BITUMINOUS MATERIALS (PRIME COAT)

AREA FROM HOT-MIX ASPHALT POLYMERIZED LEVELING BINDER COURSE [SQ FT] (SCHEDULE 11, PLAN SHEET 14)	191489.7
AREA FROM HOT-MIX ASPHALT BINDER COURSE [SQ FT] (SCHEDULE 13, PLAN SHEET 15)	13693.7
SUM OF MILLED & AGGREGATE AREAS (SQ FT)	205183.4
AREA FROM HOT-MIX ASPHALT SURFACE COURSE [SQ FT] (SCHEDULE 15, PLAN SHEET 16)	213518.9
SUM OF OVERLAY AREAS (SQ FT)	**213518.9**

TYPE SS-1 @ 0.05 LB/SQ. FT.

PAY CODE 40600275		
	PRIME QUANTITY (LBS.)	**15805.5**
	10% CONTINGENCY	1580.6
	TOTAL PRIME (LBS.)	**17386.1**

REVISIONS / REMARKS					
NO.	DESCRIPTION	DATE	BY	SURVEYOR:	/
		/ /		DSGNR/LIAISON:	
		/ /		PLOTTED BY:	hdrmc 2/22/2016

0 20 40

LakeCounty Division of Transportation

ELA ROAD RESURFACING

QUANTITY SCHEDULES

ROUTE	SECTION	SECTION NUMBER	SHEET	SHEETS
CH60	144	15-00144-21-RS	13	150

FILE NAME: U:\Design\Sullivan\Ela Rd Sidewalk\Plan Sheets.dgn

8 SCHEDULE OF EROSION CONTROL ITEMS

FROM STATION	TO STATION	OFFSET (ft)	28000305 TEMPORARY DITCH CHECKS (ft)	28000510 INLET FILTERS (ea)	X2800500 INLET PROTECTION, SPECIAL (ea)	XX006729 PERIMETER EROSION BARRIER, ROLLED EXCELSIOR (ft)	XX008865 PERMEABLE PLASTIC BERM (ft)
McDonalds Easement							
118+38.50	118+52.85	48.0 - 43.9				14.40	
118+41.45	118+55.75	58.7 - 54.6				14.30	
119+15.90	119+54.60	42.6				38.70	
119+38.14		42.6		1.0			
119+38.94		30.6		1.0			
120+16.65		31.7			1.0		
North of IL Route 12 to Terrace Lane							
123+25.00	123+45.65	29 - 32				20.90	
123+45.65	123+70.00	32.0				24.35	
123+70.00	123+74.70	32 - 33				4.80	
123+74.70	123+79.70	33 - 36.6				6.20	
123+74.88		18.9		1.0			
123+79.70	123+84.50	36.6				4.80	
123+82.16		31.6		1.0			
Terrace Lane to Pine Avenue							
124+18.40	124+25.45	37.4				7.05	
124+25.45	124+30.05	37.4 - 32				7.10	
124+30.05	125+75.00	32.0				144.95	
125+75.00	125+80.00	32 - 39				7.00	
125+80.00	126+94.50	39.0				114.50	
126+50.00		31.7		1.0			
126+84.70		24.6			1.0		
126+99.80	127+11.05	51.1 - 45				11.25	
127+10.50		42.8		1.0			
Pine Avenue to Maple Avenue							
127+40.21		43.2		1.0			
127+48.42		56.5			1.0		
127+60.00		37.6	14.0				14.0
127+61.22		19.6			1.0		
127+64.40		16.2		1.0			
127+94.70		34.4	14.0				14.0
128+50.30	128+75.20	40 - 32.6				26.00	
128+75.20	129+00.00	32.6 - 30.1				25.00	
129+00.00	129+25.00	30.1 - 29.8				25.00	
129+25.00	129+50.00	29.8 - 28.5				25.00	
129+50.00	129+74.90	28.5 - 30				24.90	
129+74.90	129+99.80	30 - 35.6				25.60	
129+99.80	130+20.00	35.6				20.20	
130+20.00	130+30.40	35.6 - 39.2				11.00	
130+28.18		51.8			1.0		
Maple Avenue to IL Route 22							
130+70.00		52.0			1.0		
130+85.22		17.4		1.0			
130+90.00	131+15.00	16.0				25.00	
131+32.38		23.4			1.0		
TOTAL EROSION CONTROL ITEMS			**28.0**	**9.0**	**7.0**	**628.00**	**28.0**

9 SCHEDULE OF AGGREGATE BASE COURSE

(WEIGHT 2 TON/CU YD)

QUANTITIY SCHEDULE	AREA (sq ft)	AREA (sq yd)	DEPTH (in)	VOLUME (cu yd)	QUANTITY (ton)
SCHEDULE OF PORTLAND CEMENT CONCRETE SIDEWALK (SCHEDULE 17, PLAN SHEET 15)	4910.2	545.6	6.0	90.9	181.9
SCHEDULE OF CONCRETE ENTRANCE (SCHEDULE 14, PLAN SHEET 15)	459.7	51.1	6.0	8.5	17.0
SCHEDULE OF CONCRETE CURB & COMBINATION CONCRETE CURB AND GUTTER (SCHEDULE 19, PLAN SHEET 18)	184.8	20.5	6.0	3.4	6.8
SUBTOTAL AGGREGATE BASE COURSE COURSE		**617.2**		**102.9**	**205.7**
CONTINGENCY +15% (10% Sidewalk Related & 5% Resurfacing Related)					30.9
TOTAL AGGREGATE BASE COURSE COURSE					**236.6**

12 SCHEDULE OF TEMPORARY RAMP

FROM	TO	LEFT OR RIGHT	LENGTH (FEET)	WIDTH (FEET)	QUANTITY (SQ YDS)
123+38.55	124+11.94	LT	73.4	1.0	8.2
124+62.15	125+07.40	LT	45.3	1.0	5.0
125+84.33	126+14.91	LT	30.6	1.0	3.4
128+15.36	128+45.93	RT	30.6	1.0	3.4
PAY CODE 40600900				**SUBTOTAL**	**20.0**
				10% CONTINGENCY	2.0
				TOTAL	**22.0**

11 SCHEDULE OF POLYMERIZED LEVELING BINDER (MACHINE METHOD), IL-4.75, N50

FROM	TO	IRREGULAR AREA INCLUDES	LENGTH (feet)	AVERAGE WIDTH (feet)	DEPTH (inch)	AREA FOR PRIME COAT (sq ft)	QUANTITY (ton)
LEFT SIDE							
79+03.75	80+35.68	Cuba Road	131.9	++	0.75	5861.9	26.9
80+35.68	84+00.00		364.3	20.0	0.75	7286.4	33.4
84+00.00	87+38.23		338.2	16.8	0.75	5682.3	26.0
87+38.23	93+59.70		621.5	11.0	0.75	6836.2	31.3
93+59.70	94+72.04	Braemar Ln	112.3	++	0.75	2774.0	12.7
94+72.04	95+84.90		112.9	24.0	0.75	2708.6	12.4
95+84.90	98+04.23		219.3	18.6	0.75	4079.5	18.7
98+04.23	101+22.20		318.0	11.0	0.75	3497.7	16.0
101+22.20	104+26.89		304.7	16.5	0.75	5027.4	23.0
104+26.89	106+37.50		210.6	20.0	0.75	4212.2	19.3
106+37.50	107+55.79	Com Entrance	118.3	++	0.75	3530.4	16.2
107+55.79	109+04.23		148.4	32.0	0.75	4750.1	21.8
109+04.23	110+36.59		132.4	28.0	0.75	3706.1	17.0
110+36.59	112+23.87		187.3	24.0	0.75	4494.7	20.6
112+23.87	113+02.38	Railroad	78.5	++	0.75	1567.2	7.2
RAILROAD							
113+44.64	114+18.42	Railroad	73.8	++	0.75	1454.7	6.7
114+18.42	115+97.05		178.6	24.0	0.75	4287.1	19.6
115+97.05	117+11.67	Com Entrance	114.6	++	0.75	3961.1	18.2
117+11.67	118+17.58		105.9	36.0	0.75	3812.8	17.5
118+17.58	119+76.76		159.2	30.5	0.75	4855.0	22.3
119+76.76	120+63.25		86.5	24.0	0.75	2075.8	9.5
120+63.25	120+77.46	US Route 12	14.2	++	0.75	216.1	1.0
US ROUTE 12							
121+88.89	122+42.00	US Route 12	53.1	++	0.75	1406.3	6.4
122+42.00	129+73.80		731.8	24.0	0.75	17563.2	80.5
RIGHT SIDE							
79+03.75	80+49.47	Cuba Road	145.7	++	0.75	5478.9	25.1
80+49.47	84+00.00		350.5	20.0	0.75	7010.6	32.1
84+00.00	87+38.23		338.2	16.6	0.75	5614.6	25.7
87+38.23	90+61.11		322.9	11.0	0.75	3551.7	16.3
90+61.11	92+01.67		140.6	18.5	0.75	2600.4	11.9
92+01.67	95+12.16		310.5	24.0	0.75	7451.8	34.2
95+12.16	96+46.16		134.0	18.5	0.75	2479.1	11.4
96+46.16	99+20.73		274.6	13.0	0.75	3569.4	16.4
99+20.73	101+22.20		201.5	11.0	0.75	2216.2	10.2
101+22.20	102+32.11		109.9	14.9	0.75	1637.7	7.5
102+32.11	102+73.78		41.7	21.7	0.75	904.2	4.1
102+73.78	105+09.58		235.8	27.6	0.75	6508.1	29.8
105+09.58	105+41.77		32.2	25.3	0.75	814.4	3.7
105+41.77	108+71.69		329.9	20.0	0.75	6598.4	30.2
108+71.69	110+58.65		187.0	17.3	0.75	3234.4	14.8
110+58.65	110+59.64		1.0	15.6	0.75	15.4	0.1
110+59.64	113+02.38		242.7	14.0	0.75	3398.4	15.6
113+02.38	113+21.37		19.0	7.0	0.75	132.9	0.6
RAILROAD							
113+79.67	113+98.55		18.9	7.0	0.75	132.2	0.6
113+98.55	116+34.23		235.7	14.0	0.75	3299.5	15.1
116+34.23	117+76.16		141.9	19.0	0.75	2696.7	12.4
117+76.16	120+25.97		249.8	24.0	0.75	5983.5	27.4
120+25.97	120+67.36	US Route 12	41.4	++	0.75	999.8	4.6
US ROUTE 12							
121+80.38	122+19.35	US Route 12	39.0	++	0.75	461.5	2.1
122+19.35	129+73.80		754.4	12.0	0.75	9053.4	41.5
PAY CODE 40600827 (110 lbs./Sq. Yd./1" Depth)					**SUBTOTAL**	**191489.7**	**877.7**
					5% CONTINGENCY		43.9
					TOTAL	**191489.7**	**921.5**

REVISIONS / REMARKS					
NO.	DESCRIPTION	DATE	BY	SURVEYOR:	/
		/ /		DSGNR/LIAISON:	
		/ /		PLOTTED BY:	hdrmc 2/22/2016

0 20 40

LakeCounty Division of Transportation

ELA ROAD RESURFACING

QUANTITY SCHEDULES

ROUTE	SECTION	SECTION NUMBER	SHEET	SHEETS
CH60	144	15-00144-21-RS	14	150

FILE NAME: U:\Design\Sullivan\Ela Rd Sidewalk\Plan Sheets.dgn

13 SCHEDULE OF HOT-MIX ASPHALT BINDER COURSE, IL-19.0, N70

FROM	TO	LEFT OR RIGHT	LENGTH (feet)	AVERAGE WIDTH (feet)	DEPTH (inch)	AREA FOR PRIME COAT (sq ft)	QUANTITY (ton)
HMA SHOULDERS							
80+35.68	87+38.23	LT	702.55	2.0	4.50	1405.1	39.3
87+38.23	93+76.15	LT	637.92	4.0	4.50	2551.7	71.4
94+72.04	95+84.80	LT	112.76	4.0	4.50	451.0	12.6
95+84.80	98+04.23	LT	219.43	2.9	4.50	636.3	17.8
98+04.23	101+22.20	LT	317.97	4.0	4.50	1271.9	35.6
101+22.20	105+34.17	LT	411.97	2.0	4.50	823.9	23.1
105+34.17	105+67.97	LT	33.8	++	4.50	298.2	8.3
112+28.17	112+92.31	LT	64.14	2.0	4.50	128.3	3.6
113+16.63	113+97.85	LT	81.22	2.0	4.50	162.4	4.5
80+49.47	87+38.23	RT	688.76	2.0	4.50	1377.5	38.6
87+38.23	90+61.11	RT	322.88	4.0	4.50	1291.5	36.2
90+61.11	92+13.54	RT	152.43	2.0	4.50	304.9	8.5
99+20.73	101+22.20	RT	201.47	4.0	4.50	805.9	22.6
101+22.20	102+32.11	RT	109.91	2.0	4.50	219.8	6.2
105+41.77	106+74.23	RT	132.46	2.0	4.50	264.9	7.4
110+63.87	111+21.29	RT	57.42	2.0	4.50	114.8	3.2
111+94.57	113+49.29	RT	154.72	2.0	4.50	309.4	8.7
113+73.44	116+05.98	RT	232.54	2.0	4.50	465.1	13.0
116+05.98	116+34.23	RT	28.25	3.0	4.50	84.8	2.4
116+34.23	118+15.76	RT	181.53	4.0	4.50	726.1	20.3
PAY CODE 40603085 (112 lbs./Sq. Yd./1" Depth)					SUBTOTAL	13693.7	383.4
					5% CONTINGENCY		19.2
					TOTAL	13693.7	402.6

++ IRREGULAR AREA

14 SCHEDULE OF PRIVATE ENTRANCE and MAILBOX TURNOUT [STATION 128+31.50 RIGHT]

FROM STATION	TO STATION	PAVEMENT ITEM	LENGTH (ft)	AVERAGE WIDTH (ft)	AREA (sq ft)	HOT-MIX ASPHALT SURFACE COURSE, MIX "D", N50 THICKNESS (in)	HOT-MIX ASPHALT SURFACE COURSE, MIX "D", N50 QUANTITY (ton)	AGGREGATE BASE COURSE TYPE B AREA (sq ft)	PORTLAND CEMENT CONCRETE DRIVEWAY PAVEMENT, 6 INCH (sq yd)	MAILBOX POST (each)	WIDTH AT ROW FOR SAWCUT (ft)
128+04.36	128+34.36	MBTO	30.0	2.0	60.0	2.5	0.9	60.0			
128+34.36	128+54.36		20.0	4.0	80.0	2.5	1.2	80.0			
128+54.36	128+74.36		20.0	2.0	40.0	2.5	0.6	40.0			
128+44.50										1.0	
128+20.55	128+41.82	HMA ENTRANCE PAVEMENT	21.3	++	83.2	2.5	1.3	83.2			
128+23.85	128+39.96	CONCRETE ENTRANCE PAVEMENT	16.1	12.2	196.5			196.5	21.8		16.1
SUBTOTAL ENTRANCE RELATED ITEMS					459.7		4.1	459.7	21.8	1.0	
CONTINGENCY +10%							0.4		2.2		
TOTAL ENTRANCE RELATED ITEMS					459.7		4.5	459.7	24.0	1.0	

THE REMOVAL OF THE EXISTING DRIVEWAY PAVEMENT (HMA & CONCRETE) WILL BE PAID FOR AS EARTH EXCAVATION

++ IREGULAR AREA

16 SCHEDULE OF PROTECTIVE COAT

QUANTITIY SCHEDULE	CONCRETE SURFACE AREA (sq ft)	PROTECTIVE COAT (sq yd)
AREA FROM PORTLAND CEMENT CONCRETE SIDEWALK [SQ FT] (SCHEDULE 17, PLAN SHEET 15)	4910.2	545.6
AREA FROM CONCRETE ENTRANCE [SQ FT] (SCHEDULE 14, PLAN SHEET 15)	196.5	21.8
AREA FROM CONCRETE CURB & COMBINATION CONCRETE CURB AND GUTTER [SQ FT] (SCHEDULE 19, PLAN SHEET 18)	1281.9	142.4
SUBTOTAL PROTECTIVE COAT		**709.9**
10% CONTINGENCY		71.0
TOTAL PROTECTIVE COAT		**780.8**

17 SCHEDULE OF PORTLAND CEMENT CONCRETE SIDEWALK and RELATED ITEMS

FROM STATION	TO STATION	LENGTH (ft)	AVERAGE WIDTH (ft)	AGGREGATE BASE COURSE & PROTECTIVE COAT AREA (sq ft)	SIDEWALK REMOVAL (sq ft)	PCC SIDEWALK 5 INCH (sq ft)	PCC SIDEWALK 6 INCH (sq ft)	DETECTABLE WARNINGS (sq ft)
Adjacent to McDonalds & Easement Area								
118+39.99	118+54.20	14.2	5.0	71.1	71.1	71.1		
118+75.00	118+80.00	5.0	9.4	47.0		47.0		
118+80.00	118+95.65	15.6	6.5	101.7		101.7		
118+95.65	119+16.00	20.4	5.0	101.8		101.8		
119+16.00	119+54.50	38.5	5.0	192.5		192.5		
119+54.50	120+19.12	64.6	5.0	323.1		323.1		
120+19.12	120+28.84	9.9	5.0	49.7		49.7		
North of IL Route 12 to Terrace Lane								
123+25.00	123+50.00	25.0	5.0	125.0		125.0		
123+50.00	123+74.07	24.1	5.0	120.3		120.3		
123+72.07	123+74.07	2.0	5.0					10.0
123+74.07	123+79.52	5.5	++	14.6		14.6		
Terrace Lane to Pine Avenue								
124+24.19	124+29.64	5.4	++	17.9		17.9		
124+29.64	124+31.64	2.0	5.0					10.0
124+29.64	124+67.96	38.3	5.0	191.6		191.6		
124+67.96	125+07.04	39.7	5.0	198.5		198.5		
125+07.04	126+31.37	124.3	5.0	621.7		621.7		
126+30.01	126+94.83	64.8	3.8		246.3			
126+31.37	126+90.00	61.3	5.0	306.5		306.5		
126+90.00	126+99.80	9.8	5.0	49.0		49.0		
126+94.83	126+99.80	5.0	18.9		93.9	0.0		
126+99.80	127+06.25	6.5	16.9	109.0		109.0		
126+99.80	127+08.53	8.7	++		44.9			
127+04.25	127+06.25	2.0	5.0					10.0
127+06.25	127+08.56	2.3	++	6.3		6.3		
Pine Avenue to Maple Avenue								
127+42.40	127+45.08	2.7	++	7.1		7.1		
127+45.08	127+47.08	2.0	5.0					10.0
127+45.08	127+52.08	22.2	5.0	111.0		111.0		
127+52.08	127+53.16	22.2	++	5.6		5.6		
127+53.16	127+73.18							
127+73.18	127+83.97	11.2	5.0	56.0		56.0		
127+83.97	127+90.46	6.5	5.0	32.4		32.4		
127+90.46	128+09.54	19.3	5.0	96.5		96.5		
128+09.54	128+23.60	14.1	5.0	70.3		70.3		
128+23.60	128+40.20	16.6	5.0	83.0			83.0	
128+40.20	128+54.40	14.2	5.0	71.0		71.0		
128+54.40	128+75.00	20.8	6.0	124.8		124.8		
128+75.00	129+55.84	80.8	7.0	565.9		565.9		
129+55.84	129+94.16	39.0	5.0	195.0		195.0		
129+94.16	130+22.86	28.7	5.0	143.5		143.5		
130+22.86	130+22.86	0.0	5.0					0.0
130+22.86	130+26.49	3.6	++	10.2		10.2		
Maple Avenue to IL Route 22								
130+67.60	130+72.01	4.4	++	11.8		11.8		
130+72.01	130+74.01	2.0	5.0					10.0
130+72.01	130+82.30	10.3	5.0	51.4		51.4		
130+82.30	131+12.70	31.2	6.0	187.2		187.2		
131+12.70	131+15.95	3.3	7.0	22.8		22.8		
131+15.95	131+39.17	23.4	8.0	187.2		187.2		
131+39.17	131+46.20	7.0	9.0	63.3		63.3		
131+46.20	131+68.72	++	++	167.0		167.0		
131+47.43	131+61.15	16.0	2.0					32.0
TOTAL PORTLAND CEMENT CONCRETE SIDEWALK				4910.2	456.2	4827.2	83.0	82.0

++ Irregular Area

REVISIONS / REMARKS					
NO.	DESCRIPTION	DATE	BY	SURVEYOR:	/
		/ /		DSGNR/LIAISON:	
		/ /		PLOTTED BY:	hdrmc 2/22/2016

0 20 40

LakeCounty Division of Transportation

ELA ROAD RESURFACING

QUANTITY SCHEDULES

ROUTE	SECTION	SECTION NUMBER	SHEET	SHEETS
CH60	144	15-00144-21-RS	15	150

FILE NAME: U:\Design\Sullivan\Ela Rd Sidewalk\Plan Sheets.dgn

15 SCHEDULE OF HOT-MIX ASPHALT SURFACE COURSE, MIX "D", N70

FROM	TO	IRREGULAR AREA INCLUDES	LENGTH (feet)	AVERAGE WIDTH (feet)	DEPTH (inch)	AREA FOR PRIME COAT (sq ft)	QUANTITY (ton)
RIGHT SIDE							
78+88.75	80+49.47	Cuba Road	160.7	++	1.50	65.3	0.6
80+49.47	84+00.00		350.5	22.0	1.50	7711.7	70.7
84+00.00	87+38.23		338.2	18.5	1.50	6257.3	57.4
87+38.23	90+61.11		322.9	15.0	1.50	4843.2	44.4
90+61.11	92+01.60		140.5	20.5	1.50	2880.0	26.4
92+01.60	92+13.54	C&G Outlet	11.9	++	1.50	310.3	2.8
92+13.54	95+12.16		298.6	24.0	1.50	7166.9	65.7
95+12.16	96+46.16		134.0	18.5	1.50	2479.1	22.7
96+46.16	99+20.73		274.6	13.0	1.50	3569.4	32.7
99+20.73	99+22.00	C&G Outlet	1.3	++	1.50	18.1	0.2
99+22.00	101+22.20		200.2	15.0	1.50	3003.0	27.5
101+22.20	102+32.11		109.9	14.9	1.50	1637.7	15.0
102+32.11	102+73.78		41.7	21.7	1.50	904.2	8.3
102+73.78	105+09.58		235.8	27.6	1.50	6508.1	59.7
105+09.58	105+41.77		32.2	25.3	1.50	814.4	7.5
105+41.77	106+74.23		132.5	22.0	1.50	2914.1	26.7
106+74.23	108+71.69		197.5	20.0	1.50	3949.2	36.2
108+71.69	110+58.65		187.0	17.3	1.50	3234.4	29.6
110+58.65	110+63.87		5.2	16.5	1.50	86.1	0.8
110+63.87	111+21.29		57.4	16.0	1.50	918.7	8.4
111+21.29	111+94.57		73.3	14.0	1.50	1025.9	9.4
111+94.57	113+27.58		133.0	16.0	1.50	2128.2	19.5
113+27.58	113+47.29		19.7	8.0	1.50	157.7	1.4
RAILROAD							
113+54.49	113+76.12		21.6	8.0	1.50	173.0	1.6
113+76.12	116+05.98		229.9	16.0	1.50	3677.8	33.7
116+05.98	117+76.02		170.0	22.0	1.50	3740.9	34.3
117+76.02	118+15.76		39.7	28.0	1.50	1112.7	10.2
118+15.76	120+25.97		210.2	24.0	1.50	5045.0	46.2
120+25.97	120+86.69	US Route 12	60.7	++	1.50	1922.5	17.6
US ROUTE 12							
121+49.44	122+84.71	US Route 12	135.3	++	1.50	3081.3	28.2
122+84.71	123+43.99		59.3	12.0	1.50	711.4	6.5
123+43.99	124+56.82	Terrace Ave	112.8	++	1.50	2305.9	21.1
124+56.82	126+73.71		216.9	12.0	1.50	2602.7	23.9
126+73.71	127+80.02	Pine Ave	106.3	++	1.50	2205.6	20.2
127+80.02	129+88.80		208.8	12.0	1.50	2505.4	23.0

FROM	TO	IRREGULAR AREA INCLUDES	LENGTH (feet)	AVERAGE WIDTH (feet)	DEPTH (inch)	AREA FOR PRIME COAT (sq ft)	QUANTITY (ton)
LEFT SIDE							
78+88.75	80+35.68	Cuba Road	146.9	++	1.50	6858.5	62.9
80+35.68	84+00.00		364.3	22.0	1.50	8015.0	73.5
84+00.00	87+38.23		338.2	18.5	1.50	6257.3	57.4
87+38.23	93+59.70		621.5	15.0	1.50	9322.1	85.5
93+59.70	94+72.04	Braemar Ln	112.3	++	1.50	3570.9	32.7
94+72.04	95+84.90		112.9	28.0	1.50	3160.1	29.0
95+84.90	98+04.23		219.3	21.5	1.50	4715.6	43.2
98+04.23	101+22.20		318.0	15.0	1.50	4769.6	43.7
101+22.20	104+26.89		304.7	18.5	1.50	5636.8	51.7
104+26.89	105+34.17		107.3	22.0	1.50	2360.2	21.6
105+34.17	105+67.97	C&G Outlet	33.8	++	1.50	972.2	8.9
105+67.97	106+37.50		69.5	20.0	1.50	1390.6	12.7
106+37.50	107+55.79	Com Entrance	118.3	++	1.50	4445.0	40.7
107+55.79	109+04.23		148.4	32.0	1.50	4750.1	43.5
109+04.23	110+36.59		132.4	28.0	1.50	3706.1	34.0
110+36.59	112+23.87		187.3	24.0	1.50	4494.7	41.2
112+23.87	113+27.58	Railroad	103.7	++	1.50	2350.3	21.5
RAILROAD							
113+16.63	114+18.42	Railroad	101.8	++	1.50	2268.9	20.8
114+18.42	115+97.05		178.6	24.0	1.50	4287.1	39.3
115+97.05	117+11.67	Com Entrance	114.6	++	1.50	4928.3	45.2
117+11.67	118+17.58		105.9	36.0	1.50	3812.8	35.0
118+17.58	119+76.76		159.2	30.5	1.50	4855.0	44.5
119+76.76	120+04.94		28.2	24.0	1.50	676.3	6.2
120+04.94	121+14.88	US Route 12	109.9	++	1.50	3850.2	35.3
US ROUTE 12							
121+88.89	122+42.00	US Route 12	53.1	++	1.50	1406.3	12.9
122+42.00	126+68.51		426.5	24.0	1.50	10236.2	93.8
126+68.51	127+70.43	Com Entrance	101.9	++	1.50	3515.0	32.2
127+70.43	129+88.80		218.4	24.0	1.50	5240.9	48.0

PAY CODE 40603340 (112 lbs./Sq. Yd./1" Depth)	**SUBTOTAL**	**213518.9**	**1957.3**
	5% CONTINGENCY		97.9
	TOTAL	**213518.9**	**2055.1**

++IRREGULAR AREA

20 SCHEDULE OF CLASS D PATCHING

PAVEMENT PATCHING			AREA (sq yd)
AREA OF MAINLINE HMA CONCRETE SURFACE COURSE (LESS INTERSECTION RIGHT TURN LANE WIDENING AREAS)			23751.5
PATCHING @ 5%			1187.6
44201773	**CLASS D PATCHES, TYPE I, 10 INCH**	**10%**	**118.8**
44201777	**CLASS D PATCHES, TYPE II, 10 INCH**	**15%**	**178.1**
44201781	**CLASS D PATCHES, TYPE III, 10 INCH**	**45%**	**534.4**
44201783	**CLASS D PATCHES, TYPE IV, 10 INCH**	**30%**	**356.3**

18 SCHEDULE OF HOT-MIX ASPHALT SURFACE REMOVAL 2 1/4"

FROM	TO	IRREGULAR AREA INCLUDES	LENGTH (feet)	AVERAGE WIDTH (feet)	AREA (sq ft)	AREA (sq yd)
HOT-MIX ASPHALT SURFACE REMOVAL 2 1/4" LEFT SIDE						
79+03.75	80+35.68	Cuba Road	131.9	++	5861.9	651.3
80+35.68	84+00.00		364.3	20.0	7286.4	809.6
84+00.00	87+38.23		338.2	16.8	5682.3	631.4
87+38.23	93+59.70		621.5	11.0	6836.2	759.6
93+59.70	94+72.04	Braemar Ln	112.3	++	2774.0	308.2
94+72.04	95+84.90		112.9	24.0	2708.6	301.0
95+84.90	98+04.23		219.3	18.6	4079.5	453.3
98+04.23	101+22.20		318.0	11.0	3497.7	388.6
101+22.20	104+26.89		304.7	16.5	5027.4	558.6
104+26.89	106+37.50		210.6	20.0	4212.2	468.0
106+37.50	107+55.79	Com Entrance	118.3	++	3530.4	392.3
107+55.79	109+04.23		148.4	32.0	4750.1	527.8
109+04.23	110+36.59		132.4	28.0	3706.1	411.8
110+36.59	112+23.87		187.3	24.0	4494.7	499.4
112+23.87	113+02.38	Railroad	78.5	++	1567.2	174.1
RAILROAD						
113+44.64	114+18.42	Railroad	73.8	++	1454.7	161.6
114+18.42	115+97.05		178.6	24.0	4287.1	476.3
115+97.05	117+11.67	Com Entrance	114.6	++	3961.1	440.1
117+11.67	118+17.58		105.9	36.0	3812.8	423.6
118+17.58	119+76.76		159.2	30.5	4855.0	539.4
119+76.76	120+63.25		86.5	24.0	2075.8	230.6
120+63.25	120+77.46	US Route 12	14.2	++	216.1	24.0
US ROUTE 12						
121+88.89	122+42.00	US Route 12	53.1	++	1406.3	156.3
122+42.00	129+73.80		731.8	24.0	17563.2	1951.5

++IRREGULAR AREA

FROM	TO	IRREGULAR AREA INCLUDES	LENGTH (feet)	AVERAGE WIDTH (feet)	AREA (sq ft)	AREA (sq yd)
HOT-MIX ASPHALT SURFACE REMOVAL 2 1/4" RIGHT SIDE						
79+03.75	80+49.47	Cuba Road	145.7	++	5478.9	608.8
80+49.47	84+00.00		350.5	20.0	7010.6	779.0
84+00.00	87+38.23		338.2	16.6	5614.6	623.8
87+38.23	90+61.11		322.9	11.0	3551.7	394.6
90+61.11	92+01.67		140.6	18.5	2600.4	288.9
92+01.67	95+12.16		310.5	24.0	7451.8	828.0
95+12.16	96+46.16		134.0	18.5	2479.1	275.5
96+46.16	99+20.73		274.6	13.0	3569.4	396.6
99+20.73	101+22.20		201.5	11.0	2216.2	246.2
101+22.20	102+32.11		109.9	14.9	1637.7	182.0
102+32.11	102+73.78		41.7	21.7	904.2	100.5
102+73.78	105+09.58		235.8	27.6	6508.1	723.1
105+09.58	105+41.77		32.2	25.3	814.4	90.5
105+41.77	108+71.69		329.9	20.0	6598.4	733.2
108+71.69	110+58.65		187.0	17.3	3234.4	359.4
110+58.65	110+59.64		1.0	15.6	15.4	1.7
110+59.64	113+02.38		242.7	14.0	3398.4	377.6
113+02.38	113+21.37		19.0	7.0	132.9	14.8
RAILROAD						
113+79.67	113+98.55		18.9	7.0	132.2	14.7
113+98.55	116+34.23		235.7	14.0	3299.5	366.6
116+34.23	117+76.16		141.9	19.0	2696.7	299.6
117+76.16	120+25.97		249.8	24.0	5983.5	664.8
120+25.97	120+67.36	US Route 12	41.4	++	999.8	111.1
US ROUTE 12						
121+80.38	122+19.35	US Route 12	39.0	++	461.5	51.3
122+19.35	129+73.80		754.4	12.0	9053.4	1005.9
					SUBTOTAL	**11738.5**
PAY CODE 44000158					10% CONTINGENCY	1173.9
					TOTAL	**12912.4**

21 SCHEDULE OF ITEMS TO BE MOVED OR ADJUSTED

FIRE HYDRANT AND VALVE TO BE MOVED

FROM STATION	FROM OFFSET	TO STATION	TO OFFSET	LEFT OR RIGHT	QUANTITY (each)
FIRE HYDRANT					1.0
120+20.70	40.2	120+20.70	42.6	LEFT	
VALVE					
120+20.90	38.5	120+20.90	40.2	LEFT	

DOMESTIC WATER SERVICE BOXES TO BE ADJUSTED

STATION	OFFSET	EXISTING TOP ELEV	ADJUSTED TOP ELEV	LEFT OR RIGHT	QUANTITY (each)
128+59.90	30.60	847.58	847.97	RIGHT	1.0

UTILITY STRUCTURES TO BE ADJUSTED

STATION	OFFSET	EXISTING T/F ELEV	ADJUSTED T/F ELEV	LEFT OR RIGHT	QUANTITY (each)
127+88.30	27.0	845.55	846.90	RIGHT	1.0

HANDHOLE TO BE REMOVED

STATION	OFFSET	EXISTING TOP ELEV	ADJUSTED TOP ELEV	LEFT OR RIGHT	QUANTITY (each)
129+05.31	15.5	850.17	850.41	RIGHT	1.0

REMOVE AND REINSTALL EXISTING WIRELESS DETECTOR UNIT

STATION	OFFSET	LEFT OR RIGHT	QUANTITY (each)
83+88.00	12.0	LEFT	1.0
83+88.00	12.0	RIGHT	1.0
TOTAL			**2.0**

18A SCHEDULE OF HOT-MIX ASPHALT SURFACE REMOVAL, VARIABLE DEPTH

FROM	TO	IRREGULAR AREA INCLUDES	LENGTH (feet)	AVERAGE WIDTH (feet)	AREA (sq ft)	AREA (sq yd)
HOT-MIX ASPHALT SURFACE REMOVAL, VARIABLE DEPTH LEFT-RIGHT						
78+88.75	79+03.75	South Returns	15.00	++	903.4	100.4
Cuba Road West			++	++	550.0	61.1
Cuba Road East			++	++	592.3	65.8
Braemar Lane			++	++	732.6	81.4
Commercial Ent - 107+03.8			++	++	914.6	101.6
112+66.91	113+46.59	Railroad	79.68	++	1012.5	112.5
113+19.35	113+98.55	Railroad	79.20	++	1008.0	112.0
Commercial Ent - 116+52.5			++	++	967.9	107.5
120+54.67	121+14.88	US Route 12	60.21	++	1617.6	179.7
121+68.48	121+84.36	US Route 12	15.88	++	1456.1	161.8
Commercial Ent - 127+16.9			++	++	1075.3	119.5
Terrace Lane			++	++	931.7	103.5
Pine Avenue			++	++	890.2	98.9
129+73.80	129+88.80		15.00	36.0	540.0	60.0
					SUBTOTAL	**1465.8**
PAY CODE X4401198					10% CONTINGENCY	146.6
					TOTAL	**1612.4**

22 SCHEDULE OF CLASS SI CONCRETE (OUTLET)

STATION	STATION	LEFT OR RIGHT	A-A TO E-E (FEET)	F-F (FEET)	QUANTITY (CU YD)
105+45.42	105+80.72	LEFT	15.3	16.9	2.4
				SUBTOTAL	**2.4**
PAY CODE 60600095				10 % CONTINGENCY	0.2
				TOTAL	**2.6**

REVISIONS / REMARKS

NO.	DESCRIPTION	DATE	BY		
		/ /		SURVEYOR:	/
		/ /		DSGNR/LIAISON:	
		/ /		PLOTTED BY:	hdrmc 2/18/2016

0 20 40

LakeCounty Division of Transportation

ELA ROAD RESURFACING

QUANTITY SCHEDULES

ROUTE	SECTION	SECTION NUMBER	SHEET	SHEETS
CH60	144	15-00144-21-RS	17	150

FILE NAME: U:\Design\Sullivan\Ela Rd Sidewalk\Plan Sheets.dgn

19 SCHEDULE OF CONCRETE CURB & COMBINATION CONCRETE CURB AND GUTTER and RELATED ITEMS

FROM STATION	TO STATION	LEFT OR RIGHT	44000500 COMBINATION CURB AND GUTTER REMOVAL (ft)	AGGREGATE BASE COURSE AREA (sq yd)	PROTECTIVE COAT AREA (sq ft)	60600605 CONCRETE CURB, TYPE B (ft)	60603900 COMBINATION CONCRETE CURB AND GUTTER, TYPE B-6.12 (ABUTTING EXISTING PAVEMENT) (ft)	60605100 COMBINATION CONCRETE CURB AND GUTTER, TYPE B-6.24 (ABUTTING EXISTING PAVEMENT) (ft)	X6061005 CONCRETE CURB TYPE B (SPECIAL) (ft)	FULL CURB/ TRANSISTION/ ADA RAMP/ MBTO
McDonalds Easement										
118+82.08	119+88.50	LEFT		6.9	106.4				106.4	
North of IL Route 12 to Terrace Lane										
123+67.07	123+74.07	RIGHT		2.3	13.0	13.0				CURB & FLARE
123+71.05	123+74.41	RIGHT	4.0		8.0		4.0			TRANSISTION
123+74.41	123+79.96	RIGHT	7.6		15.2		7.6			ADA RAMP
123+79.96	123+82.31	RIGHT	3.9		7.8		3.9			TRANSISTION
Terrace Lane to Pine Avenue										
124+21.41	124+23.77	RIGHT	3.9		7.8		3.9			TRANSISTION
124+23.77	124+29.28	RIGHT	7.5		15.0		7.5			ADA RAMP
124+29.28	124+32.56	RIGHT	4.0		8.0		4.0			TRANSISTION
127+02.60	127+04.70	RIGHT	3.3		6.6		3.3			FULL CURB
127+04.70	127+06.76	RIGHT	3.8		7.6		3.8			TRANSISTION
127+06.76	127+09.12	RIGHT	5.6		11.2		5.6			ADA RAMP
127+09.12	127+10.43	RIGHT	4.1		8.2		4.1			TRANSISTION
Pine Avenue to Maple Avenue										
127+40.47	127+41.87	RIGHT	3.9		7.8		3.9			TRANSISTION
127+41.87	127+44.58	RIGHT	5.8		11.6		5.8			ADA RAMP
127+44.58	127+46.84	RIGHT	3.9		7.8		3.9			TRANSISTION
127+45.08	127+52.08	RIGHT		2.3	13.0	13.0				CURB & FLARE
127+98.36	128+04.36	RIGHT	6.0		12.0		6.0			TRANSISTION
128+04.36	128+74.36	RIGHT	70.0		140.0		70.0			MBTO
128+74.36	128+80.36	RIGHT	6.0		12.0		6.0			TRANSISTION
128+80.36	129+60.00	RIGHT	79.6		159.2		79.6			FULL CURB
129+60.00	129+62.00	RIGHT	2.0		4.0		2.0			FULL CURB
130+20.37	130+23.27	RIGHT	3.9		7.8		3.9			TRANSISTION
130+23.27	130+26.98	RIGHT	6.3		12.6		6.3			ADA RAMP
130+26.98	130+28.65	RIGHT	3.9		7.8		3.9			TRANSISTION
Maple Avenue to IL Route 22										
130+65.10	130+67.13	RIGHT	3.9		7.8		3.9			TRANSISTION
130+67.13	130+71.58	RIGHT	6.8		13.6		6.8			ADA RAMP
130+67.60	130+89.00	RIGHT		4.8	29.9	27.4				CURB & FLARE
130+71.58	130+74.57	RIGHT	3.9		7.8		3.9			TRANSISTION
130+72.01	130+85.00	RIGHT		3.3	19.0	19.0				CURB & FLARE
131+12.70	131+26.46	RIGHT		0.9	13.9				13.9	
131+45.41	131+48.74	RIGHT	3.9		11.7			3.9		TRANSISTION
131+48.74	131+61.80	RIGHT	16.8		50.4			16.8		ADA RAMP
131+61.80	131+65.77	RIGHT	5.8		17.4			5.8		TRANSISTION
RESURFACING CONTINGENCY QUANTITIES			200.0		500.0		100.0	100.0		
TOTAL CONCRETE CURB AND GUTTER			**480.1**	**20.5**	**1281.9**	**72.4**	**353.6**	**126.5**	**120.3**	

FULL CURB = FULL CURB HEIGHT
TRANSISTION = 6' TRANSISITION FROM FULL CURB HEIGHT TO DEPRESSED CURB
ADA RAMP = PEDESTRIAN RAMP DEPRESSED CURB
MBTO = DEPRESSED CURB FOR MAILBOX TURNOUT/ENTRANCE
CURB FLARE = TYPE B CURB INCLUDES CURB FLARE TRANSISTION FROM TYPE B CURB TO B-6.12/B-6.24 CURB AND GUTTER (PAID FOR AS 4 FEET OF LENGTH)

23 SCHEDULE OF SHORT TERM PAVEMENT MARKINGS, PAVEMENT MARKING TAPE, TYPE III 4" and WORK ZONE PAVEMENT MARKING REMOVAL

FROM STATION	TO STATION	LEFT OR RIGHT	DESCRIPTION	LENGTH	QUANTITY (ft)
CUBA ROAD					
79+30.58	79+30.81	LEFT	LANE LINE	39.6	39.6
79+42.58	79+42.81	LEFT	DBL, 4" Y 11" C-C	39.6	8.0
79+29.88	79+29.98	RIGHT	DBL, 4" Y 11" C-C	15.9	8.0
79+41.88	79+41.98	RIGHT	LANE LINE	15.9	15.9
ELA ROAD					
79+87.00	81+30.00	LEFT	LANE LINE	143.0	143.0
79+87.00	81+30.00	RIGHT	DBL, 4" Y 11" C-C	143.0	32.0
81+20.00		CL	LEFT TURN ONLY		109.0
81+30.00	87+38.25	CL	MEDIAN	608.3	256.0
87+38.25	93+75.00	CL	DBL, 4" Y 11" C-C	636.8	128.0
92+22.50	95+22.50	RIGHT	LANE LINE	300.0	300.0
94+69.75	95+71.90	LEFT	LANE LINE	102.2	102.2
94+69.75	101+22.20	CL	DBL, 4" Y 11" C-C	652.5	136.0
95+61.90		LEFT	RIGHT TURN ONLY		109.0
101+22.20	105+32.25	CL	MEDIAN	410.0	176.0
105+32.25	106+54.25	LEFT	DBL, 4" Y 11" C-C	122.0	32.0
105+32.25	106+54.25	RIGHT	LANE LINE	122.0	122.0
105+42.25		CL	LEFT TURN ONLY		109.0
107+44.23	112+43.63	CL - LT	MEDIAN	499.4	208.0
107+47.43	109+04.23	LEFT	LANE LINE	156.8	156.8
108+94.23		LEFT	RIGHT TURN ONLY		109.0
109+16.80		RIGHT	RAILROAD CROSSING		200.0
111+08.80		RIGHT	RAILROAD CROSSING		200.0
112+43.63	113+11.38	LEFT	DBL, 4" Y 11" C-C	67.8	16.0
112+43.63	113+27.66	CL	LANE LINE	84.0	84.0
112+53.63		LEFT	LEFT TURN ONLY		109.0
OMISSION - RAILROAD CROSSING					
113+38.35	116+06.30	LEFT	DBL, 4" Y 11" C-C	267.9	56.0
113+54.57	116+06.30	CL	LANE LINE	251.7	251.7
115+64.30		LEFT	LEFT TURN ONLY		109.0
115+66.30		LEFT	RAILROAD CROSSING		200.0
116+79.23	118+75.40	LEFT	MEDIAN	196.2	80.0
116+83.00	118+17.60	LEFT	LANE LINE	134.6	134.6
117+74.75	120+55.00	RIGHT	LANE LINE	280.3	280.3
117+84.75		RIGHT	RIGHT TURN ONLY		109.0
117+87.30		LEFT	RAILROAD CROSSING		200.0
118+07.60		LEFT	RIGHT TURN ONLY		109.0
118+75.40	120+55.00	LEFT	DBL, 4" Y 11" C-C	179.6	40.0
118+75.40	120+55.00	CL	LANE LINE	179.6	179.6
118+85.40		LEFT	LEFT TURN ONLY		109.0
119+88.90		RIGHT	RIGHT TURN ONLY		109.0
122+19.16	123+63.00	CL	DBL, 4" Y 11" C-C	143.8	32.0
122+20.61	123+63.00	LEFT	LANE LINE	142.4	142.4
122+54.50		LEFT	LEFT TURN ONLY		109.0
124+20.00	124+77.20	LEFT	LANE LINE	57.2	57.2
124+20.00	126+68.50	CL-LT	DBL, 4" Y 11" C-C	248.5	56.0
124+67.20		LEFT	LEFT TURN ONLY		109.0
125+74.20	126+68.50	CL	LANE LINE	94.3	94.3
125+84.20		LEFT	LEFT TURN ONLY		109.0
127+70.50	128+79.25	LEFT	LANE LINE	108.8	108.8
127+70.50	129+88.80	CL	DBL, 4" Y 11" C-C	218.3	48.0
128+69.25			LEFT TURN ONLY		109.0
SUBTOTAL SHORT TERM PAVEMENT MARKINGS (1 APPLICATION)					**5850.3**
TOTAL SHORT TERM PAVEMENT MARKINGS - 4 APPLICATIONS (MILL; PRIME COAT; BINDER COURSE & PRIME COAT ON BINDER COURSE)					**23401.2**
TOTAL PAVEMENT MARKING TAPE, TYPE III 4" (1 APPLICATION - SURFACE COURSE)					**5850.3**
TOTAL WORK ZONE PAVEMENT MARKING REMOVAL (SQ FT) (REMOVAL OF PAVEMENT MARKING TAPE, TYPE III 4" FROM SURFACE COURSE)					**1950.1**

24

SCHEDULE OF TEMPORARY PAVEMENT MARKINGS

FROM STATION	TO STATION	LEFT OR RIGHT	DESCRIPTION	4" YELLOW (ft)	5" WHITE (ft)	6" WHITE (ft)	12" YELLOW (ft)	12" WHITE (ft)	24" WHITE (ft)	L & S WHITE (sq ft)
CUBA ROAD										
79+14.09	79+43.02	LEFT	STOP BAR						28.9	
79+30.58	79+30.81	LEFT	LANE LINE			39.6				
79+42.58	79+42.81	LEFT	DBL, 4" Y 11" C-C	79.2						
79+29.88	79+29.98	RIGHT	DBL, 4" Y 11" C-C	31.8						
79+41.88	79+41.98	RIGHT	LANE LINE			15.9				
79+29.53	79+57.44	RIGHT	STOP BAR						27.9	
ELA ROAD										
SW Return at Cuba Rd		LEFT	EDGELINE		76.8					
SE Return at Cuba Rd		RIGHT	EDGELINE		55.5					
NW Return at Cuba Rd		LEFT	EDGELINE		98.6					
NE Return at Cuba Rd		RIGHT	EDGELINE		87.8					
79+72.84	80+35.68	LEFT	DIAGONAL, 12" W					25.1		
79+75.49	80+49.47	RIGHT	DIAGONAL, 12" W					32.3		
79+85.00	79+85.00	LT-RT	STOP BAR						29.0	
79+87.00	81+30.00	LEFT	LANE LINE			143.0				
79+87.00	81+30.00	RIGHT	DBL, 4" Y 11" C-C	286.0						
80+05.30	93+59.70	LEFT	EDGELINE		1354.4					
80+13.94	113+43.89	RIGHT	EDGELINE		3330.0					
81+20.00		CL	LEFT TURN ONLY							36.4
81+30.00	87+38.25	CL	MEDIAN	2433.2						
81+30.00	87+38.25	CL	DIAGONAL, 12" Y @ 30' C-C				137.7			
87+38.25	93+75.00	CL	DBL, 4" Y 11" C-C	1273.6						
90+61.10	92+22.50	RIGHT	6' SKIP - 2' DASH			40.0				
92+22.50	95+22.50	RIGHT	LANE LINE			300.0				
SW Return at Braemer Ln		LEFT	EDGELINE		57.1					
NW Return at Braemer Ln		LEFT	EDGELINE		40.2					
94+69.75	95+71.90	LEFT	LANE LINE			102.2				
94+69.75	101+22.20	CL	DBL, 4" Y 11" C-C	1305.0						
94+72.04	106+37.50	LEFT	EDGELINE		1165.5					
95+61.90		LEFT	RIGHT TURN ONLY							36.4
101+22.20	105+32.25	CL	MEDIAN	1640.0						
101+22.20	105+32.25	CL	DIAGONAL, 12" Y @ 30' C-C				83.6			
105+32.25	106+54.25	LEFT	DBL, 4" Y 11" C-C	244.0						
105+32.25	106+54.25	RIGHT	LANE LINE			122.0				
105+42.25		CL	LEFT TURN ONLY							36.4
SW Rtn at Commercial Ent		LEFT	EDGELINE		57.1					
NW Rtn at Commercial Ent		LEFT	EDGELINE		33.1					
107+44.23	112+43.63	CL - LT	MEDIAN	1997.6						
107+44.23	112+43.63	CL - LT	DIAGONAL, 12" Y @ 30' C-C				188.8			
107+47.43	109+04.23	LEFT	LANE LINE			156.8				
107+51.92	112+95.04	LEFT	EDGELINE		543.1					
108+94.23		LEFT	RIGHT TURN ONLY							36.4
109+16.80		RIGHT	RAILROAD CROSSING						16.0	61.2
111+08.80		RIGHT	RAILROAD CROSSING						16.0	61.2
112+43.63	113+11.38	LEFT	DBL, 4" Y 11" C-C	135.6						
112+43.63	113+27.66	CL	LANE LINE			84.0				
112+53.63		LEFT	LEFT TURN ONLY							36.4
112+99.80		LT-RT	STOP BAR						24.0	
OMISSION - RAILROAD CROSSING										
113+22.07	115+97.05	LEFT	EDGELINE		275.0					
113+38.35	116+06.30	LEFT	DBL, 4" Y 11" C-C	535.8						
113+54.57	116+06.30	CL	LANE LINE			251.7				
113+70.75	120+25.97	RIGHT	EDGELINE		655.2					
113+75.30		LEFT	STOP BAR						12.0	
115+64.30		LEFT	LEFT TURN ONLY							36.4
115+66.30		LEFT	RAILROAD CROSSING						16.0	61.2
SW Rtn at Commercial Ent		LEFT	EDGELINE		32.1					
116+06.10	117+74.75	RIGHT	6' SKIP - 2' DASH			42.0				
116+79.23	118+75.40	LEFT	MEDIAN	784.8						
116+79.23	118+75.40	LEFT	DIAGONAL, 12" Y @ 30' C-C				37.8			
116+83.00	118+17.60	LEFT	LANE LINE			134.6				
NW Rtn at Commercial Ent		LEFT	EDGELINE		14.3					
117+11.67	120+04.94	LEFT	EDGELINE		293.3					
117+14.25	118+75.40	CL	6' SKIP - 2' DASH			40.0				
117+74.75	120+55.00	RIGHT	LANE LINE			280.3				
117+84.75		RIGHT	RIGHT TURN ONLY							36.4
117+87.30		LEFT	RAILROAD CROSSING						16.0	61.2
118+07.60		LEFT	RIGHT TURN ONLY							36.4
118+17.60	119+76.76	LEFT	6' SKIP - 2' DASH			40.0				
118+75.40	120+55.00	LEFT	DBL, 4" Y 11" C-C	359.2						
118+75.40	120+55.00	CL	LANE LINE			179.6				
118+85.40		LEFT	LEFT TURN ONLY							36.4
119+88.90		RIGHT	RIGHT TURN ONLY							36.4
120+47.20	120+57.00	LT-RT	STOP BAR						43.6	
SW Return at US Rte 12		LEFT	EDGELINE		84.4					
SE Return at US Rte 12		RIGHT	EDGELINE		47.2					
120+85.06	121+06.30	LEFT	IDOT CROSS WALK			42.8				
120+91.38	121+08.59	LEFT	STOP BAR						17.5	
NW Return at US Rte 12		LEFT	EDGELINE		51.5					
NE Return at US Rte 12		RIGHT	EDGELINE		80.0					
122+07.24	122+14.04	LT-RT	CROSS WALK					115.0		
122+17.16	122+20.53	LT-RT	STOP BAR						28.4	
122+19.16	123+63.00	CL	DBL, 4" Y 11" C-C	287.6						
122+20.61	123+63.00	LEFT	LANE LINE			142.4				
122+27.11	123+44.00	RIGHT	EDGELINE		114.5					
122+42.00	126+68.51	LEFT	EDGELINE		426.5					
122+54.50		LEFT	LEFT TURN ONLY							36.4
SE Return at Terrace Ln		RIGHT	EDGELINE		44.7					
NE Return at Terrace Ln		RIGHT	EDGELINE		42.0					
124+20.00	124+77.20	LEFT	LANE LINE			57.2				
124+20.00	126+68.50	CL-LT	DBL, 4" Y 11" C-C	497.0						
124+56.82	126+73.71	RIGHT	EDGELINE		216.9					
124+67.20		LEFT	LEFT TURN ONLY							36.4
124+77.20	125+74.20	LEFT	6' SKIP - 2' DASH			24.0				
124+77.20	125+74.20	CL	6' SKIP - 2' DASH			24.0				
125+74.20	126+68.50	CL	LANE LINE			94.3				
125+84.20		LEFT	LEFT TURN ONLY							36.4
SE Return at Pine Ave		RIGHT	EDGELINE		35.6					
NE Return at Pine Ave		RIGHT	EDGELINE		38.1					
SW Rtn at Commercial Ent		LEFT	EDGELINE		24.5					
NW Rtn at Commercial Ent		LEFT	EDGELINE		29.3					
127+70.43	129+88.80	LEFT	EDGELINE		218.4					
127+70.50	128+79.25	LEFT	LANE LINE			108.8				
127+70.50	129+88.80	CL	DBL, 4" Y 11" C-C	436.6						
127+80.02	129+88.80	RIGHT	EDGELINE		208.8					
128+69.25			LEFT TURN ONLY							36.4
128+79.25	129+88.80	RIGHT	6' SKIP - 2' DASH			28.0				
128+79.25	129+88.80	RIGHT	6' SKIP - 2' DASH			28.0				
130+46.95	130+63.90	RIGHT	STOP BAR						33.9	
TOTAL TEMPORARY PAVEMENT MARKINGS				**12327.0**	**9831.5**	**2521.2**	**447.9**	**172.4**	**309.2**	**754.4**
							620.3			

NOTE:
TEMPORARY PAVEMENT MARKING QUANTITIES HAVE NOT BEEN INCLUDED FOR REPLACING THE EXISTING PAVEMENT MARKINGS ON THE CONCRETE PAVEMENT FROM THE NORTH RESURFACING LIMITS TO THE SOUTH SIDE OF THE EAST-WEST CROSS WALK AT IL ROUTE 22.

26 SCHEDULE OF PAINT PAVEMENT MARKINGS

FROM STATION	TO STATION	LEFT OR RIGHT	DESCRIPTION	5" WHITE (ft)
ELA ROAD				
80+05.30	93+59.70	LEFT	EDGELINE	1354.4
80+13.94	113+43.89	RIGHT	EDGELINE	3330.0
94+72.04	106+37.50	LEFT	EDGELINE	1165.5
107+51.92	112+95.04	LEFT	EDGELINE	543.1
OMISSION - RAILROAD CROSSING				
113+22.07	115+97.05	LEFT	EDGELINE	275.0
113+70.75	120+25.97	RIGHT	EDGELINE	655.2
117+11.67	120+04.94	LEFT	EDGELINE	293.3
122+27.11	123+44.00	RIGHT	EDGELINE	114.5
122+42.00	126+68.51	LEFT	EDGELINE	426.5
124+56.82	126+73.71	RIGHT	EDGELINE	216.9
127+70.43	129+88.80	LEFT	EDGELINE	218.4
127+80.02	129+88.80	RIGHT	EDGELINE	208.8
TOTAL TEMPORARY PAVEMENT MARKINGS				8801.6

25 SCHEDULE OF THERMOPLASTIC PAVEMENT MARKINGS

FROM STATION	TO STATION	LEFT OR RIGHT	DESCRIPTION	4" YELLOW (ft)	5" WHITE (ft)	6" WHITE (ft)	12" WHITE (ft)	24" WHITE (ft)
CUBA ROAD								
79+14.09	79+43.02	LEFT	STOP BAR					28.9
79+30.58	79+30.81	LEFT	LANE LINE			39.6		
79+42.58	79+42.81	LEFT	DBL, 4" Y 11" C-C	79.2				
79+29.88	79+29.98	RIGHT	DBL, 4" Y 11" C-C	31.8				
79+41.88	79+41.98	RIGHT	LANE LINE			15.9		
79+29.53	79+57.44	RIGHT	STOP BAR					27.9
ELA ROAD								
SW Return at Cuba Rd		LEFT	EDGELINE		76.8			
SE Return at Cuba Rd		RIGHT	EDGELINE		55.5			
NW Return at Cuba Rd		LEFT	EDGELINE		98.6			
NE Return at Cuba Rd		RIGHT	EDGELINE		87.8			
SW Return at Braemer Ln		LEFT	EDGELINE		57.1			
NW Return at Braemer Ln		LEFT	EDGELINE		40.2			
SW Rtn at Commercial Ent		LEFT	EDGELINE		57.1			
NW Rtn at Commercial Ent		LEFT	EDGELINE		33.1			
OMISSION - RAILROAD CROSSING								
SW Rtn at Commercial Ent		LEFT	EDGELINE		32.1			
NW Rtn at Commercial Ent		LEFT	EDGELINE		14.3			
SW Return at US Rte 12		LEFT	EDGELINE		84.4			
SE Return at US Rte 12		RIGHT	EDGELINE		47.2			
120+85.06	121+06.30	LEFT	IDOT CROSS WALK			42.8		
120+91.38	121+08.59	LEFT	STOP BAR					17.5
NW Return at US Rte 12		LEFT	EDGELINE		51.5			
NE Return at US Rte 12		RIGHT	EDGELINE		80.0			
122+07.24	122+14.04	LT-RT	CROSS WALK				115.0	
SE Return at Terrace Ln		RIGHT	EDGELINE		44.7			
NE Return at Terrace Ln		RIGHT	EDGELINE		42.0			
SE Return at Pine Ave		RIGHT	EDGELINE		35.6			
NE Return at Pine Ave		RIGHT	EDGELINE		38.1			
SW Rtn at Commercial Ent		LEFT	EDGELINE		24.5			
NW Rtn at Commercial Ent		LEFT	EDGELINE		29.3			
TOTAL THERMOPLASTIC PAVEMENT MARKINGS				111.0	1029.9	98.3	115.0	74.3

27 SCHEDULE OF POLYUREA PAVEMENT MARKINGS TYPE 1

FROM STATION	TO STATION	LEFT OR RIGHT	DESCRIPTION	78008270 POLYUREA PAVEMENT MARKING TYPE 1- LINE 4" (ft)	78008270 POLYUREA PAVEMENT MARKING TYPE 1- LINE 5" (ft)	78008270 POLYUREA PAVEMENT MARKING TYPE 1- LINE 6" (ft)	78008270 POLYUREA PAVEMENT MARKING TYPE 1- LINE 24" (ft)	78008200 POLYUREA PAVEMENT MARKING TYPE 1- LETTERS & SYMBOLS (sq ft)
129+88.80	131+48.50	LEFT	EDGELINE		164.9			
129+88.80	131+41.00	LEFT	DBL, 4" Y 11" C-C	319.4				
129+88.80	131+41.00	CL	LANE LINE			152.2		
SE Return at Maple Ave		RIGHT	EDGELINE		49.9			
130+46.75	130+69.50	RIGHT	RIGHT TURN ONLY					36.4
130+46.75	130+69.50	LEFT	THRU - LEFT ARROW					23.4
130+46.75	130+69.50	RIGHT	STOP BAR				17.0	
NE Return at Maple Ave		RIGHT	EDGELINE		41.1			
130+46.75	130+69.50	RIGHT	EDGELINE		53.3			
130+46.95	130+63.90	LT-RT	STOP BAR				31.6	
TOTAL PAVEMENT MARKINGS				319.4	309.2	152.2	48.6	59.8
78300100 PAVEMENT MARKING REMOVAL (SQ FT)				106.5	90.9	76.1	97.2	59.8
				430.5				

28 SCHEDULE OF DETECTOR LOOP INSTALLATION & REPLACEMENT

LOCATION	STATION	OFFSET	LEFT OR RIGHT	LOOP (feet)	LEAD (feet)	QUANTITY (feet)
LOOP REPLACEMENT FOR LOOPS DAMAGED DURING MILLING						
ELA ROAD AT CUBA ROAD						
ELA ROAD (SOUTH)	78+94.15	0.0	CL	24.0	25	49.0
	78+88.75	12.0	RIGHT	24.0	11.2	35.2
ELA ROAD (NORTH)	79+75.00	0.0	CL	24.0	27.4	51.4
	79+80.00	12.0	LEFT	24.0	11.7	35.7
	79+90.00	0.0	CL	24.0	23.2	47.2
	79+95.00	12.0	LEFT	24.0	11.5	35.5
	80+05.00	0.0	CL	24.0	24.4	48.4
	82+43.00	10.0	LEFT	32.0	7.0	39.0
	83+74.00	12.0	LEFT	24.0	6.4	30.4
CUBA ROAD (WEST)	79+36.50	39.3	LEFT	24.0	22.2	46.2
	79+24.50	43.3	LEFT	24.0	8.5	32.5
	79+36.50	54.3	LEFT	24.0	18.2	42.2
	79+24.50	58.3	LEFT	24.0	3.5	27.5
	79+36.50	69.3	LEFT	24.0	15.7	39.7
CUBA ROAD (EAST)	79+36.50	42.4	RIGHT	24.0	21.1	45.1
	79+48.50	45.4	RIGHT	24.0	7.9	31.9
	79+36.50	57.4	RIGHT	24.0	17.3	41.3
	79+48.50	60.4	RIGHT	24.0	3.1	27.1
ELA ROAD AT US ROUTE 12						
ELA ROAD (SOUTH)	120+22.74	18.0	RIGHT	24.0	3.1	27.1
	120+27.84	6.0	RIGHT	24.0	15.1	39.1
	120+27.84	5.8	LEFT	24.0	27.1	51.1
	120+37.74	19.0	RIGHT	28.0	3.1	31.1
	120+42.84	6.0	RIGHT	24.0	19.3	43.3
	120+42.84	5.8	LEFT	24.0	31.3	55.3
	120+52.74	21.0	RIGHT	36.0	9.1	45.1
	120+57.84	6.0	RIGHT	24.0	35.4	59.4
	120+57.84	5.8	LEFT	24.0	47.4	71.4
LOOP INSTALLATION - NEW PROPOSED LOOPS						
ELA ROAD AT US ROUTE 12						
ELA ROAD (NORTH)	121+94.20	6.0	LEFT	24.0	32.3	56.3
	121+99.00	18.0	LEFT	24.0	25.2	49.2
	121+99.00	37.5	LEFT	50.5	5.8	56.3
	122+09.20	6.0	LEFT	24.0	24.6	48.6
	122+14.00	18.0	LEFT	24.0	8.9	32.9
	122+24.20	6.0	LEFT	24.0	20.7	44.7
	122+29.00	18.0	LEFT	24.0	4.2	28.2
	122+39.20	6.0	LEFT	24.0	14.7	38.7
	122+44.00	18.0	LEFT	24.0	3.0	27.0
	125+62.00	18.0	LEFT	24.0	3.0	27.0
PAY CODE 88600600					TOTAL	1537.1

REVISIONS / REMARKS					
NO.	DESCRIPTION	DATE	BY	SURVEYOR:	/
		/ /		DSGNR/LIAISON:	
		/ /		PLOTTED BY:	hdrmc 2/18/2016

0 20 40

LakeCounty Division of Transportation

ELA ROAD RESURFACING

QUANTITY SCHEDULES

ROUTE	SECTION	SECTION NUMBER	SHEET	SHEETS
CH60	144	15-00144-21-RS	20	150

FILE NAME: U:\Design\Sullivan\Ela Rd Sidewalk\Plan Sheets.dgn

29 SCHEDULE OF BUTT JOINT FOR ENTRANCE RESURFACING

FROM STATION	TO STATION	ENTRANCE DESCRIPTION	LC400100 BUTT JOINT FOR ENTRANCE RESURFACING (foot)
111+39.61	111+73.74	COMMERCIAL ENTRANCE	34.1
118+22.31	118+64.88	IDOT MAINTENANCE FACILITY	42.6
123+48.18	124+01.62	COMMERCIAL ENTRANCE BEHIND C&G	53.4
			34.0
124+68.23	125+04.02	COMMERCIAL ENTRANCE BEHIND C&G	35.8
			26.0
125+88.08	126+11.00	COMMERCIAL ENTRANCE BEHIND C&G	22.0
			22.9
TOTAL			270.8

30 SCHEDULE OF SEGMENTAL CONCRETE BLOCK WALL

FROM STATION	TO STATION	LENGTH (inch)	HEIGHT (inch)	WALL AREA (sq ft)	LC500411 CONCRETE BLOCK WALL SEALANT (sq ft)
131+26.46	131+27.94	18.0	20.0	2.5	4.0
131+27.94	131+41.25	162.0	28.0	31.5	45.0
131+41.25	131+45.75	54.0	28.0	10.5	15.0
131+45.75	131+48.75	36.0	28.0	7.0	10.0
131+48.75	131+50.25	18.0	20.0	2.5	4.0
TOTALS				54.0	78.0

31 SCHEDULE OF INSTALL SURVEY MONUMENTS

STATION	OFFSET (feet)	LT/RT	DESCRIPTION	QUANTITY (each)
79+28.05	0.00	C/L	Illinois Section Corner	1.0
105+70.00	0.00	C/L	Illinois Section Corner	1.0
PAY CODE LC600200			TOTAL	2.0

32 SCHEDULE OF GROOVED THERMOPLASTIC PAVEMENT MARKINGS

FROM STATION	TO STATION	LEFT OR RIGHT	DESCRIPTION	4" YELLOW (ft)	6" WHITE (ft)	12" YELLOW (ft)	12" WHITE (ft)	24" WHITE (ft)	L & S WHITE (sq ft)
79+72.84	80+35.68	LEFT	DIAGONAL, 12" W				25.1		
79+75.49	80+49.47	RIGHT	DIAGONAL, 12" W				32.3		
79+85.00	79+85.00	LT-RT	STOP BAR					29.0	
79+87.00	81+30.00	LEFT	LANE LINE		143.0				
79+87.00	81+30.00	RIGHT	DBL, 4" Y 11" C-C	286.0					
81+20.00		CL	LEFT TURN ONLY						36.4
81+30.00	87+38.25	CL	MEDIAN	2433.2					
81+30.00	87+38.25	CL	DIAGONAL, 12" Y @ 30' C-C			137.7			
87+38.25	93+75.00	CL	DBL, 4" Y 11" C-C	1273.6					
90+61.10	92+22.50	RIGHT	6' SKIP - 2' DASH		40.0				
92+22.50	95+22.50	RIGHT	LANE LINE		300.0				
94+69.75	95+71.90	LEFT	LANE LINE		102.2				
94+69.75	101+22.20	CL	DBL, 4" Y 11" C-C	1305.0					
95+61.90		LEFT	RIGHT TURN ONLY						36.4
101+22.20	105+32.25	CL	MEDIAN	1640.0					
101+22.20	105+32.25	CL	DIAGONAL, 12" Y @ 30' C-C			83.6			
105+32.25	106+54.25	LEFT	DBL, 4" Y 11" C-C	244.0					
105+32.25	106+54.25	RIGHT	LANE LINE		122.0				
105+42.25		CL	LEFT TURN ONLY						36.4
107+44.23	112+43.63	CL - LT	MEDIAN	1997.6					
107+44.23	112+43.63	CL - LT	DIAGONAL, 12" Y @ 30' C-C			188.8			
107+47.43	109+04.23	LEFT	LANE LINE		156.8				
108+94.23		LEFT	RIGHT TURN ONLY						36.4
109+16.80		RIGHT	RAILROAD CROSSING					16.0	61.2
111+08.80		RIGHT	RAILROAD CROSSING					16.0	61.2
112+43.63	113+11.38	LEFT	DBL, 4" Y 11" C-C	135.6					
112+43.63	113+27.66	CL	LANE LINE		84.0				
112+53.63		LEFT	LEFT TURN ONLY						36.4
112+99.80		LT-RT	STOP BAR					24.0	
OMISSION - RAILROAD CROSSING									

FROM STATION	TO STATION	LEFT OR RIGHT	DESCRIPTION	4" YELLOW (ft)	6" WHITE (ft)	12" YELLOW (ft)	12" WHITE (ft)	24" WHITE (ft)	L & S WHITE (sq ft)
113+38.35	116+06.30	LEFT	DBL, 4" Y 11" C-C	535.8					
113+54.57	116+06.30	CL	LANE LINE		251.7				
113+75.30		LEFT	STOP BAR					12.0	
115+64.30		LEFT	LEFT TURN ONLY						36.4
115+66.30		LEFT	RAILROAD CROSSING					16.0	61.2
116+06.10	117+74.75	RIGHT	6' SKIP - 2' DASH		42.0				
116+79.23	118+75.40	LEFT	MEDIAN	784.8					
116+79.23	118+75.40	LEFT	DIAGONAL, 12" Y @ 30' C-C			37.8			
116+83.00	118+17.60	LEFT	LANE LINE		134.6				
117+14.25	118+75.40	CL	6' SKIP - 2' DASH		40.0				
117+74.75	120+55.00	RIGHT	LANE LINE		280.3				
117+84.75		RIGHT	RIGHT TURN ONLY						36.4
115+66.30		LEFT	RAILROAD CROSSING					16.0	61.2
118+07.60		LEFT	RIGHT TURN ONLY						36.4
118+17.60	119+76.76	LEFT	6' SKIP - 2' DASH		40.0				
118+75.40	120+55.00	LEFT	DBL, 4" Y 11" C-C	359.2					
118+75.40	120+55.00	CL	LANE LINE		179.6				
118+85.40		LEFT	LEFT TURN ONLY						36.4
119+88.90		RIGHT	RIGHT TURN ONLY						36.4
120+47.20	120+57.00	LT-RT	STOP BAR					43.6	
122+17.16	122+20.53	LT-RT	STOP BAR					28.4	
122+19.16	123+63.00	CL	DBL, 4" Y 11" C-C	287.6					
122+20.61	123+63.00	LEFT	LANE LINE		142.4				
122+54.50		LEFT	LEFT TURN ONLY						36.4
124+20.00	124+77.20	LEFT	LANE LINE		57.2				
124+20.00	126+68.50	CL-LT	DBL, 4" Y 11" C-C	497.0					
124+67.20		LEFT	LEFT TURN ONLY						36.4
124+77.20	125+74.20	LEFT	6' SKIP - 2' DASH		24.0				
124+77.20	125+74.20	CL	6' SKIP - 2' DASH		24.0				
125+74.20	126+68.50	CL	LANE LINE		94.3				
125+84.20		LEFT	LEFT TURN ONLY						36.4
127+70.50	128+79.25	LEFT	LANE LINE		108.8				
127+70.50	129+88.80	CL	DBL, 4" Y 11" C-C	436.6					
128+69.25			LEFT TURN ONLY						36.4
128+79.25	129+88.80	RIGHT	6' SKIP - 2' DASH		28.0				
128+79.25	129+88.80	RIGHT	6' SKIP - 2' DASH		28.0				
TOTAL GROOVED THERMOPLASTIC PAVEMENT MARKINGS				12216.0	2422.9	447.9	57.4	201.0	754.4
						505.3			

REVISIONS / REMARKS					
NO.	DESCRIPTION	DATE	BY	SURVEYOR:	/
		/ /		DSGNR/LIAISON:	
		/ /		PLOTTED BY:	hdrmc 2/18/2016

0 20 40

LakeCounty
Division of Transportation

ELA ROAD RESURFACING

QUANTITY SCHEDULES

ROUTE	SECTION	SECTION NUMBER	SHEET	SHEETS
CH60	144	15-00144-21-RS	21	150

FILE NAME: U:\Design\Sullivan\Ela Rd Sidewalk\Plan Sheets.dgn

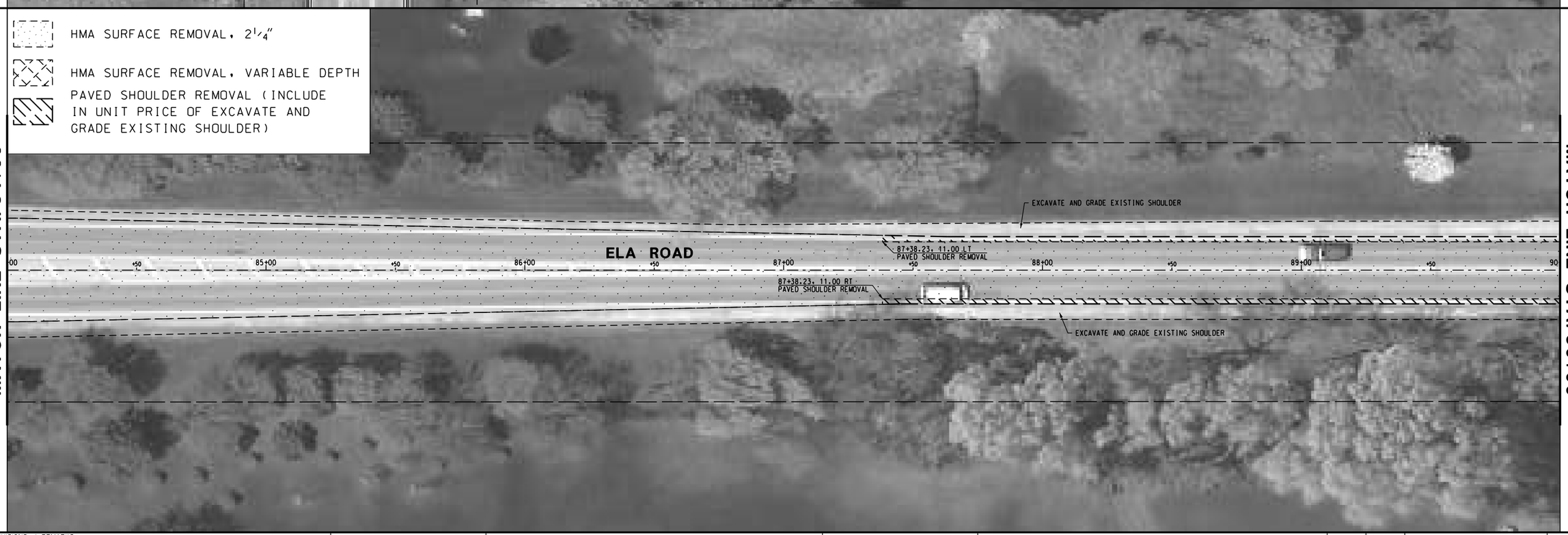

REVISIONS / REMARKS					
NO.	DESCRIPTION	DATE	BY	SURVEYOR:	/
		/ /		DSGNR/LIAISON:	KDN
		/ /		PLOTTED BY:	hd17512 2/18/2016

SCALES
VERT 5 0
HORIZ. 0 20 40

ELA ROAD RESURFACING

LakeCounty
Division of Transportation

REMOVAL SHEET
STA. 78+00.00 TO 90+00.00

ROUTE	SECTION	SECTION NUMBER	SHEET	SHEETS
CH60	144	15-00144-21-RS	22	150

FILE NAME: U:\Design\Nauman\15-00144-21-RS Ela Rd Resurfacing\Plans\15-00144-21-RS.dgn

REVISIONS / REMARKS					
NO.	DESCRIPTION	DATE	BY	SURVEYOR:	/
		/ /		DSGNR/LIAISON:	KDN
		/ /		PLOTTED BY:	hd17512 2/18/2016

VERT 5 0 — SCALES HORIZ. 0 20 40

ELA ROAD RESURFACING

LakeCounty Division of Transportation

REMOVAL SHEET

STA. 90+00.00 TO 102+00.00

ROUTE	SECTION	SECTION NUMBER	SHEET	SHEETS
CH60	144	15-00144-21-RS	23	150

FILE NAME: U:\Design\Nauman\15-00144-21-RS Ela Rd Resurfacing\Plans\15-00144-21-RS.dgn

MATCH LINE STA. 102+00

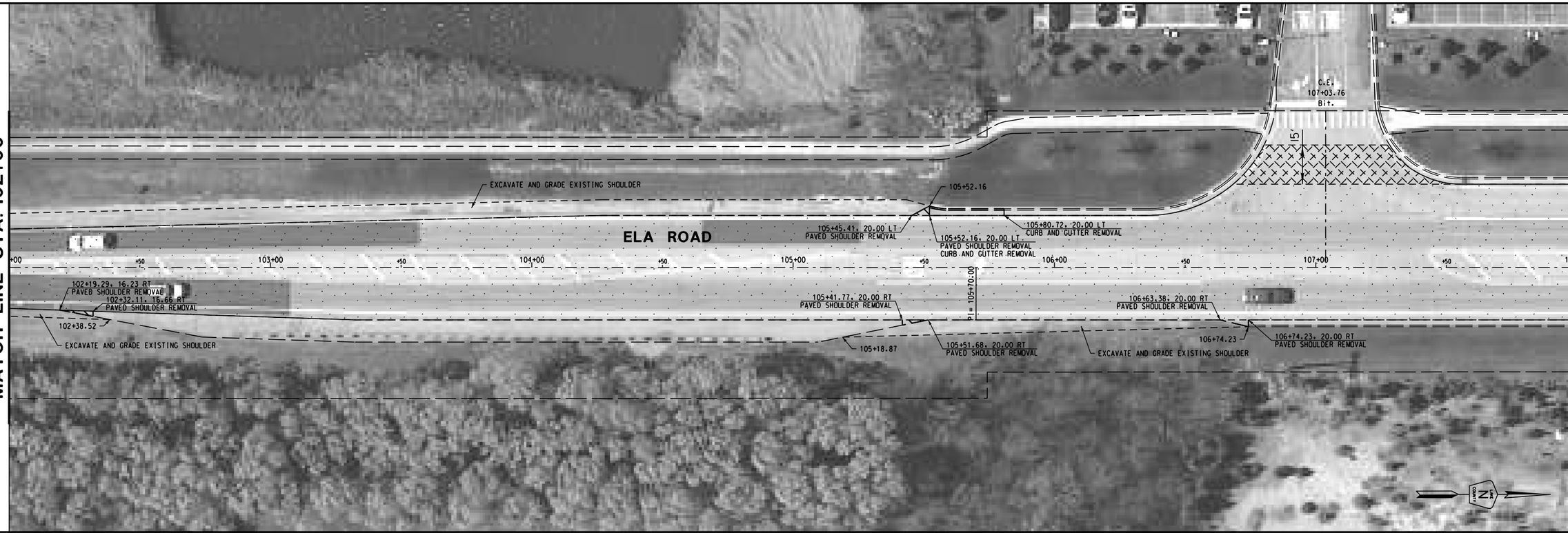

MATCH LINE STA. 108+00

HMA SURFACE REMOVAL, 2¼"

HMA SURFACE REMOVAL, VARIABLE DEPTH

PAVED SHOULDER REMOVAL (INCLUDE IN UNIT PRICE OF EXCAVATE AND GRADE EXISTING SHOULDER)

DRIVEWAY BUTT JOINT

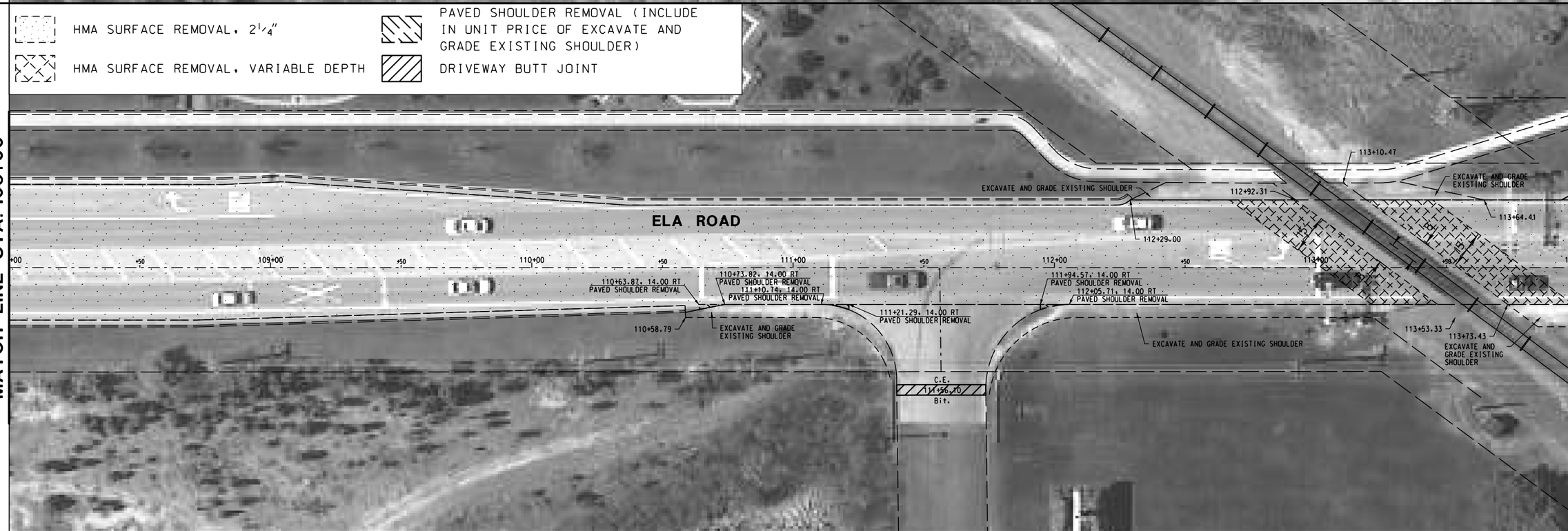

MATCH LINE STA. 114+00

REVISIONS / REMARKS					
NO.	DESCRIPTION	DATE	BY	SURVEYOR:	/
		/ /		DSGNR/LIAISON:	KDN
		/ /		PLOTTED BY:	hd17512 2/18/2016

VERT 5 0 — SCALES HORIZ. 0 20 40

ELA ROAD RESURFACING

LakeCounty Division of Transportation

REMOVAL SHEET

STA. 102+00.00 TO 114+00.00

ROUTE	SECTION	SECTION NUMBER	SHEET	SHEETS
CH60	144	15-00144-21-RS	24	150

FILE NAME: U:\Design\Nauman\15-00144-21-RS Ela Rd Resurfacing\Plans\15-00144-21-RS.dgn

MATCH LINE STA. 114+00

MATCH LINE STA. 120+00

C.E.
116+52.54
Bit.

15'

SIDEWALK REMOVAL
148 sq ft

+00 +50 115+00 +50 116+00 +50 117+00 +50 118+00 +50 119+00 +50 120

ELA ROAD

EXCAVATE AND GRADE EXISTING SHOULDER

118+15.76

C.E.
118+51.81
Bit.

HMA SURFACE REMOVAL, 2¼"

HMA SURFACE REMOVAL, VARIABLE DEPTH

DRIVEWAY BUTT JOINT

SIDEWALK and CURB & GUTTER REMOVAL

MATCH LINE STA. 120+00

MATCH LINE STA. 126+00

PROPOSED TURN LANE BY OTHERS

PROPOSED SIDEWALK BY OTHERS

PROPOSED CROSSWALK BY OTHERS

PROPOSED SIDEWALK BY OTHERS

EXISTING DETECTOR LOOPS ON THE NORTH LEG (ELA ROAD) WILL BE ABANDONED IF NOT REMOVED BY THE MILLING OPERATION

C.E.
123+74.07
Bit.

C.E.
124+87.89
Bit.

C.E
125+97
Bit

US ROUTE 22

15'

PI= 121+29.26

ELA ROAD

+00 +50 121+00 +50 122+00 +50 123+00 +50 124+00 +50 125+00 +50 126

CURB & GUTTER REMOVAL
15.0 FEET

CURB & GUTTER REMOVAL
15.4 FEET

TERRACE LANE

PROPOSED SIDEWALK BY OTHERS

PROPOSED TURN LANE BY OTHERS

REVISIONS / REMARKS					
NO.	DESCRIPTION	DATE	BY	SURVEYOR:	/
		/ /		DSGNR/LIAISON:	KDN
		/ /		PLOTTED BY:	hd17512 2/18/2016

SCALES
VERT. 0 5
HORIZ. 0 20 40

ELA ROAD RESURFACING

LakeCounty
Division of Transportation

REMOVAL SHEET
STA. 114+00.00 TO 126+00.00

ROUTE	SECTION	SECTION NUMBER	SHEET	SHEETS
CH60	144	15-00144-21-RS	25	150

FILE NAME: U:\Design\Nauman\15-00144-21-RS Ela Rd Resurfacing\Plans\15-00144-21-RS.dgn

HMA SURFACE REMOVAL, 2¼"

HMA SURFACE REMOVAL, VARIABLE DEPTH

DRIVEWAY BUTT JOINT

SIDEWALK and CURB & GUTTER REMOVAL

REVISIONS / REMARKS					
NO.	DESCRIPTION	DATE	BY	SURVEYOR:	/
		/ /		DSGNR/LIAISON:	KDN
		/ /		PLOTTED BY:	hd17512 2/18/2016

SCALES
VERT 0 5
HORIZ. 0 20 40

ELA ROAD RESURFACING

LakeCounty
Division of Transportation

REMOVAL SHEET

STA. 114+00.00 TO 132+00.00

ROUTE	SECTION	SECTION NUMBER	SHEET	SHEETS
CH60	144	15-00144-21-RS	26	150

FILE NAME: U:\Design\Nauman\15-00144-21-RS Ela Rd Resurfacing\Plans\15-00144-21-RS.dgn

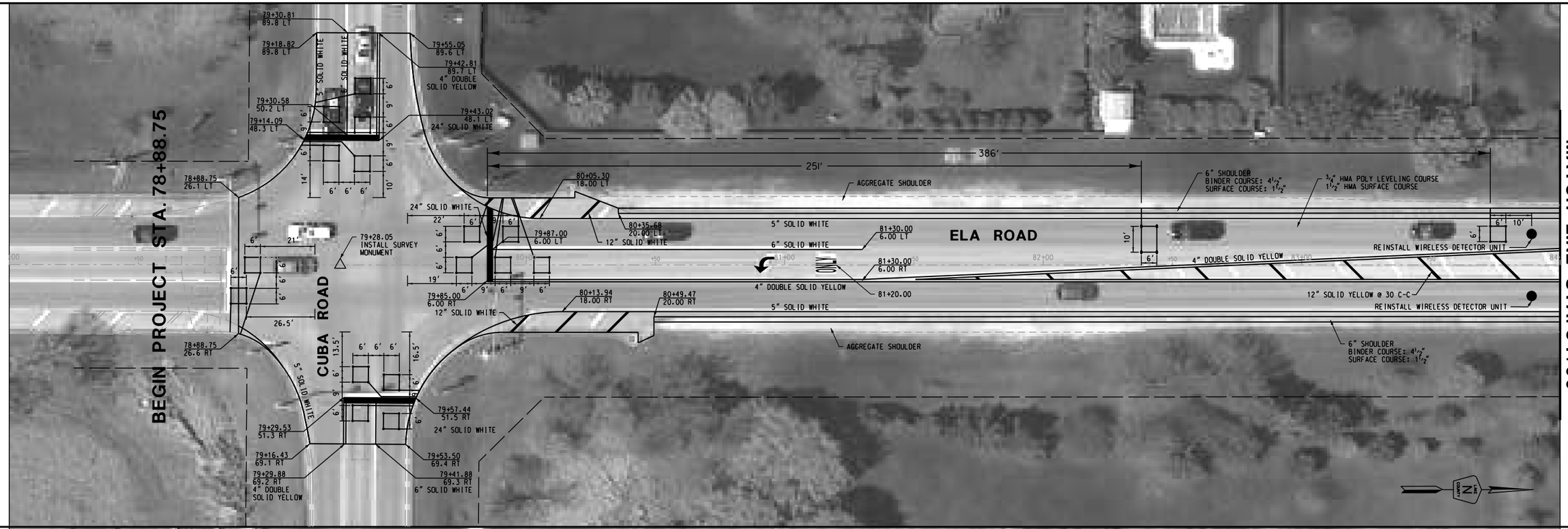

REVISIONS / REMARKS					
NO.	DESCRIPTION	DATE	BY	SURVEYOR:	/
		/ /		DSGNR/LIAISON:	KDN
		/ /		PLOTTED BY:	hd17512 2/18/2016

SCALES
VERT 0 5
HORIZ. 0 20 40

ELA ROAD RESURFACING

LakeCounty
Division of Transportation

PLAN SHEET
STA. 78+00.00 TO 90+00.00

ROUTE	SECTION	SECTION NUMBER	SHEET	SHEETS
CH60	144	15-00144-21-RS	27	150

FILE NAME: U:\Design\Nauman\15-00144-21-RS Ela Rd Resurfacing\Plans\15-00144-21-RS.dgn

REVISIONS / REMARKS					
NO.	DESCRIPTION	DATE	BY	SURVEYOR:	/
		/ /		DSGNR/LIAISON:	KDN
		/ /		PLOTTED BY:	hd17512 2/18/2016

VERT 5 0 — SCALES HORIZ. 0 20 40

ELA ROAD RESURFACING

LakeCounty Division of Transportation

PLAN SHEET

STA. 90+00.00 TO 102+00.00

ROUTE	SECTION	SECTION NUMBER	SHEET	SHEETS
CH60	144	15-00144-21-RS	28	150

FILE NAME: U:\Design\Nauman\15-00144-21-RS Ela Rd Resurfacing\Plans\15-00144-21-RS.dgn

MATCH LINE STA. 102+00

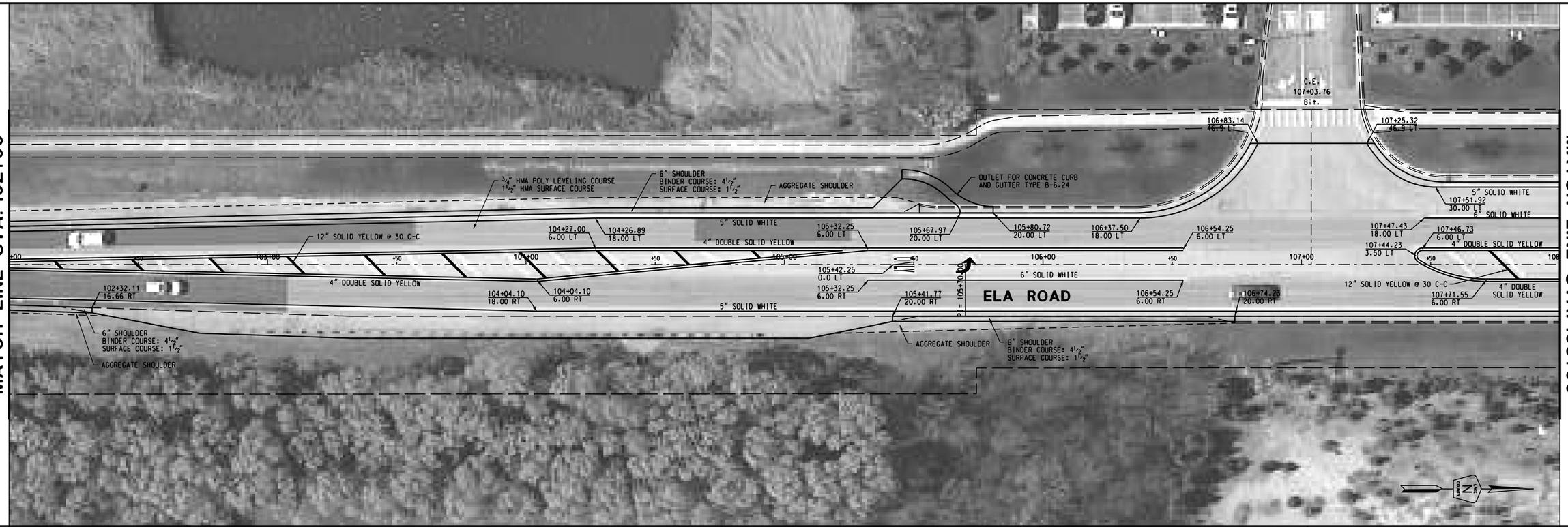

MATCH LINE STA. 108+00

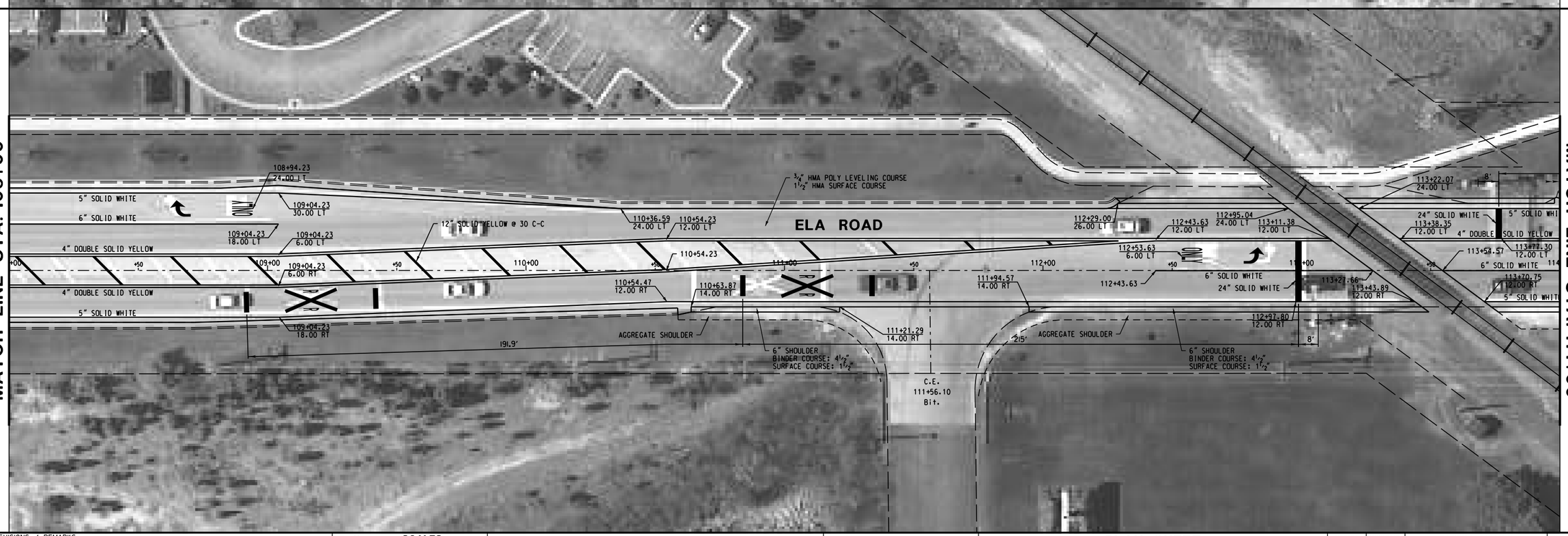

MATCH LINE STA. 114+00

REVISIONS / REMARKS					
NO.	DESCRIPTION	DATE	BY	SURVEYOR:	/
		/ /		DSGNR/LIAISON:	KDN
		/ /		PLOTTED BY:	hdl7512 2/18/2016

VERT 5 0 — SCALES HORIZ. 0 20 40

ELA ROAD RESURFACING

LakeCounty Division of Transportation

PLAN SHEET

STA. 102+00.00 TO 114+00.00

ROUTE	SECTION	SECTION NUMBER	SHEET	SHEETS
CH60	144	15-00144-21-RS	29	150

FILE NAME: U:\Design\Nauman\15-00144-21-RS Ela Rd Resurfacing\Plans\15-00144-21-RS.dgn

MATCH LINE STA. 114+00

MATCH LINE STA. 120+00

REPLACE 5" PORTLAND CEMENT CONCRETE SIDEWALK 74.5 sq ft

PROPOSED TYPE B CURB (SPECIAL) & 5" PORTLAND CEMENT CONCRETE SIDEWALK (SEE SIDEWALK PLAN SHEETS FOR DETAILS)

C.E. 116+52.54 Bit.

116+29.30 51.42 LT

116+83.52 51.42 LT

3/4" HMA POLY LEVELING COURSE
1 1/2" HMA SURFACE COURSE

118+07.60 30.00 LT

215'

171'

117+11.67 36.00 LT

5" SOLID WHITE

6" SOLID WHITE

6" DOTTED 2'/6' WHITE

5" SOLID WHITE

4" DOUBLE SOLID YELLOW

115+97.05 24.00 LT

116+83.00 24.00 LT

116+81.73 12.00 LT

12" SOLID YELLOW @ 30 C-C

118+17.60 24.00 LT

118+75.40 12.00 LT

119+76.76 24.00 LT

116+06.30 12.00 LT

116+79.23 9.50 LT

4" DOUBLE SOLID YELLOW

6" SOLID WHITE

115+00

116+00

117+00

118+00

119+00

115+64.30 9.50 LT

116+06.30

116+06.10 12.00 RT

116+31.23 14.00 RT

117+06.55

117+14.25

6" DOTTED 2'/6' WHITE

117+74.75 12.00 RT

118+75.40

118+85.40 6.00 LT

ELA ROAD

5" SOLID WHITE

6" DOTTED 2'/6' WHITE

6" SOLID WHITE

117+76.16 24.00 RT

5" SOLID WHITE

AGGREGATE SHOULDER

6" SHOULDER
BINDER COURSE: 4 1/2"
SURFACE COURSE: 1 1/2"

117+84.75 18.00 RT

119+88.90 18.00 RT

C.E. 118+51.81 Bit.

MATCH LINE STA. 120+00

MATCH LINE STA. 126+00

PROPOSED SIDEWALK TO BE CONSTRUCTED AS PART OF THIS IMPROVEMENT.

SIDEWALK, CROSSWALK & PROPOSED SIGNALS TO BE CONSTRUCTED BY OTHERS AS PART OF THE ADJACENT INTERSECTION PROJECT. SECTION NO. 02-00063-00-CH IDOT LETTING 4/24/15. SHOWN HERE FOR INFORMATION ONLY.

INTERSECTION PROJECT
PROPOSED WIDENING
SURFACE COURSE INCLUDED
IN RESURFACING PROJECT

INTERSECTION PROJECT
PROPOSED SIDEWALK, CROSSWALK
& SIGNALS

121+03.39 82.1 LT

END RESURFACING PROJECT

121+14.88 17.5 LT

122+01.62 12.0 LT

INTERSECTION PROJECT
PROPOSED SIDEWALK, CROSSWALK
& SIGNALS

120+83.33 51.6 LT

122+03.52 51.2 LT

122+14.04 33.2 LT

122+20.53 28.4 LT

DRILL EXISTING HANDHOLE (3)

10' -U.C.
1" C.N.C.

16' -U.C.
1" C.N.C.

19' -U.C.
1" C.N.C.

3/4" HMA POLY LEVELING COURSE
1 1/2" HMA SURFACE COURSE

C.E. 123+74.07 Bit.

C.E. 124+87.89 Bit.

C.E. 125+97 Bit.

5" SOLID WHITE

END RESURFACING
BEGIN US 12 OMISSION

US ROUTE 12

END US 12 OMISSION
BEGIN RESURFACING

PI= 121+29.26

120+04.94 24.00 LT

120+57.00 12.00 LT
24" SOLID WHITE

122+42.00 24.00 LT

122+54.50 6.0 LT

5" SOLID WHITE

123+63.00 12.00 LT

124+20.00 0.0 LT

124+67.20 6.0 LT

124+77.20 12.00 LT

6" DOTTED 2'/6' WHITE

125+84.20 6.0 LT

ELA ROAD

4" DOUBLE SOLID YELLOW

6" SOLID WHITE

6" SOLID WHITE

6" DOTTED 2'/6' WHITE

125+74.20 12.00 LT

6" SOLID WHITE

6" SOLID WHITE

120+55.00

121+00

120+86.69

122+00

123+00

123+63.00

124+00

125+00

6" SOLID WHITE

122+20.61 12.00 LT

4" DOUBLE SOLID YELLOW

4" DOUBLE SOLID YELLOW

6" DOTTED 2'/6' WHITE

125+74.20

5" SOLID WHITE

121+72.62

122+17.16 0.0 RT
24" SOLID WHITE

5" SOLID WHITE

122+84.71 12.00 RT

123+44.00 12.00 RT

124+20.00 0.0 LT

124+77.20

124+56.82 12.00 RT

120+57.00 12.00 RT

122+27.11 20.2 RT

122+07.24 24.2 RT

120+25.97 24.00 RT

120+47.20 28.5 RT

120+65.00 63.7 RT

121+08.44 61.9 LT

121+61.04 58.4 RT

121+59.82 61.5 RT

END RESURFACING PROJECT

INTERSECTION PROJECT
PROPOSED WIDENING
SURFACE COURSE INCLUDED
IN RESURFACING PROJECT

INTERSECTION PROJECT
PROPOSED SIDEWALK, CROSSWALK
& SIGNALS

TERRACE LANE

PROPOSED 5" PORTLAND CEMENT CONCRETE SIDEWALK (SEE SIDEWALK PLAN SHEETS FOR DETAILS)

REVISIONS / REMARKS					
NO.	DESCRIPTION	DATE	BY	SURVEYOR:	/
		/ /		DSGNR/LIAISON:	KDN
		/ /		PLOTTED BY:	hd17512 2/18/2016

SCALES
VERT 5 0
HORIZ. 0 20 40

ELA ROAD RESURFACING

LakeCounty
Division of Transportation

PLAN SHEET

STA. 114+00.00 TO 126+00.00

ROUTE	SECTION	SECTION NUMBER	SHEET	SHEETS
CH60	144	15-00144-21-RS	30	150

FILE NAME: U:\Design\Nauman\15-00144-21-RS Ela Rd Resurfacing\Plans\15-00144-21-RS.dgn

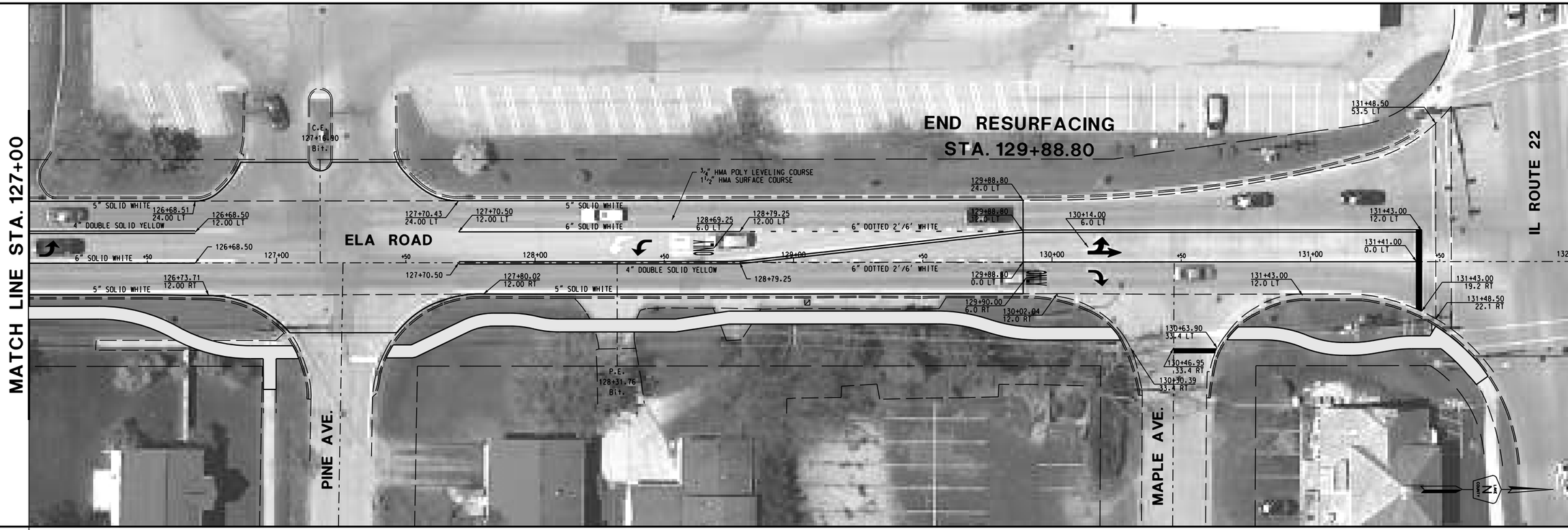

REVISIONS / REMARKS					
NO.	DESCRIPTION	DATE	BY	SURVEYOR:	/
		/ /		DSGNR/LIAISON:	KDN
		/ /		PLOTTED BY:	hdl7512 2/18/2016

SCALES
VERT. 0 5
HORIZ. 0 20 40

ELA ROAD RESURFACING

LakeCounty
Division of Transportation

PLAN SHEET

STA. 114+00.00 TO 132+00.00

ROUTE	SECTION	SECTION NUMBER	SHEET	SHEETS
CH60	144	15-00144-21-RS	31	149

FILE NAME: U:\Design\Nauman\15-00144-21-RS Ela Rd Resurfacing\Plans\15-00144-21-RS.dgn

PROPOSED SIDEWALK TO BE CONSTRUCTED AS PART OF THIS IMPROVEMENT.

SIDEWALK, CROSSWALK & PROPOSED SIGNALS TO BE CONSTRUCTED BY OTHERS AS PART OF THE ADJACENT INTERSECTION PROJECT. SECTION NO. 02-00063-00-CH IDOT LETTING 4/24/15. SHOWN HERE FOR INFORMATION ONLY.

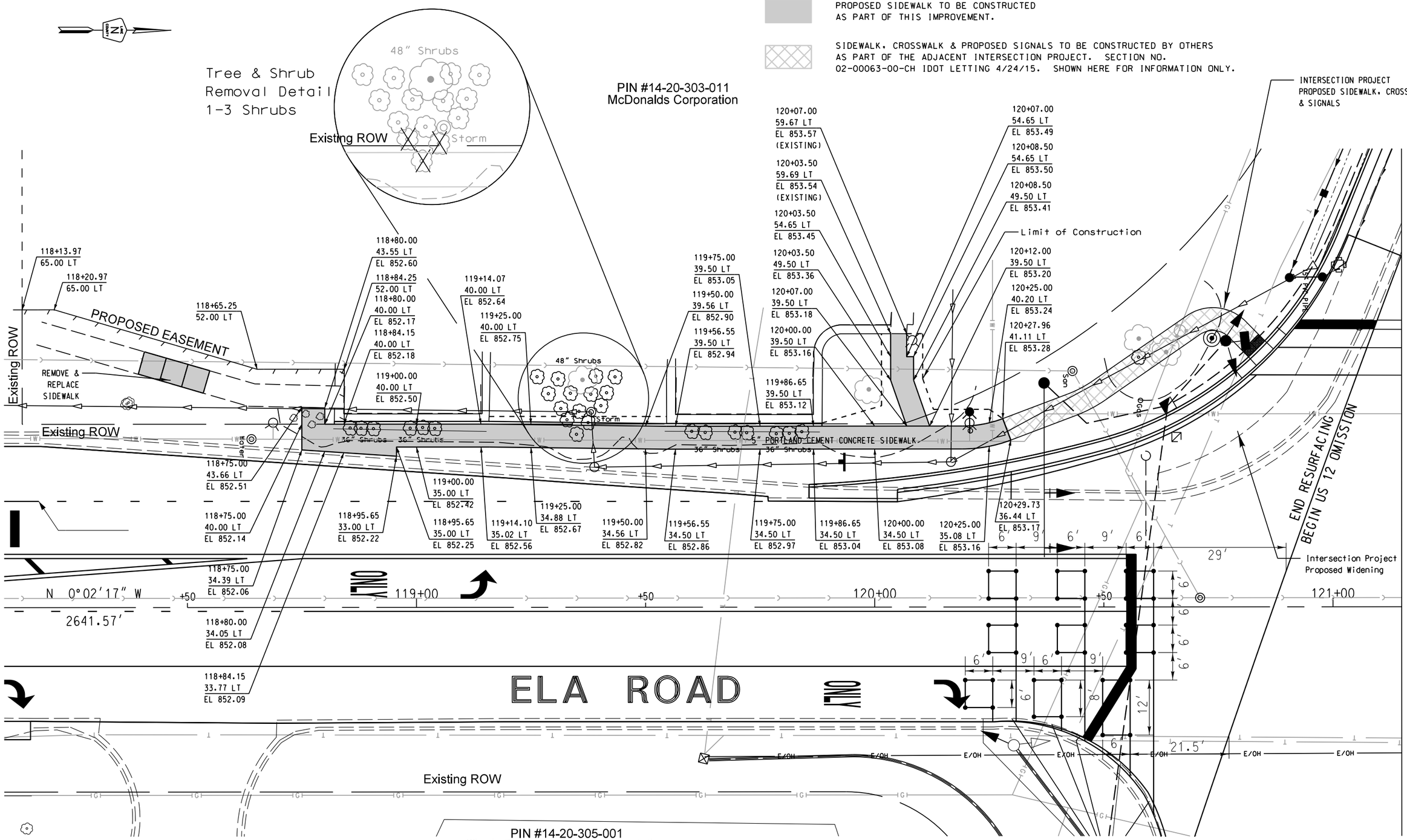

REVISIONS / REMARKS					
NO.	DESCRIPTION	DATE	BY	SURVEYOR:	/
		/ /		DSGNR/LIAISON:	
		/ /		PLOTTED BY:	hdrmc 2/18/2016

0 10 20

LakeCounty Division of Transportation

ELA ROAD RESURFACING

SIDEWALK CONSTRUCTION STA 118+50.00 TO 121+25.00

ROUTE	SECTION	SECTION NUMBER	SHEET	SHEETS
CH60	144	15-00144-21-RS	32	150

FILE NAME: U:\Design\Sullivan\Ela Rd Sidewalk\Plan Sheets.dgn

PIN #14-19-400-008
Buchanan Energy (N) LLC

PROPOSED SIDEWALK TO BE CONSTRUCTED AS PART OF THIS IMPROVEMENT.

SIDEWALK, CROSSWALK & PROPOSED SIGNALS TO BE CONSTRUCTED BY OTHERS AS PART OF THE ADJACENT INTERSECTION PROJECT. SECTION NO. 02-00063-00-CH IDOT LETTING 4/24/15. SHOWN HERE FOR INFORMATION ONLY.

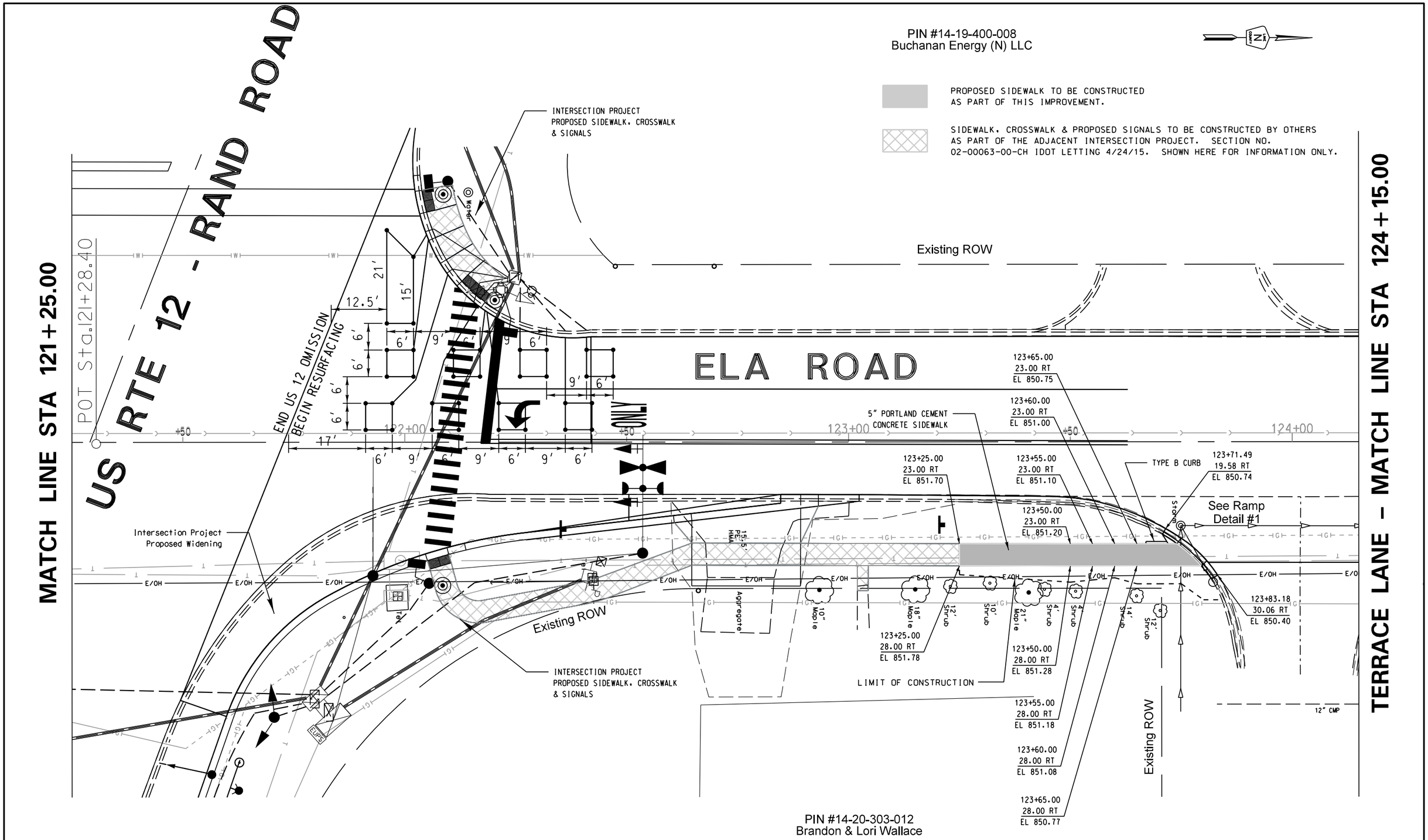

REVISIONS / REMARKS					
NO.	DESCRIPTION	DATE	BY	SURVEYOR:	/
		/ /		DSGNR/LIAISON:	
		/ /		PLOTTED BY:	hdrmc 2/18/2016

LakeCounty Division of Transportation

ELA ROAD RESURFACING

SIDEWALK CONSTRUCTION STA 121+25.00 TO 124+15.00

ROUTE	SECTION	SECTION NUMBER	SHEET	SHEETS
CH60	144	15-00144-21-RS	33	150

FILE NAME: U:\Design\Sullivan\Ela Rd Sidewalk\Plan Sheets.dgn

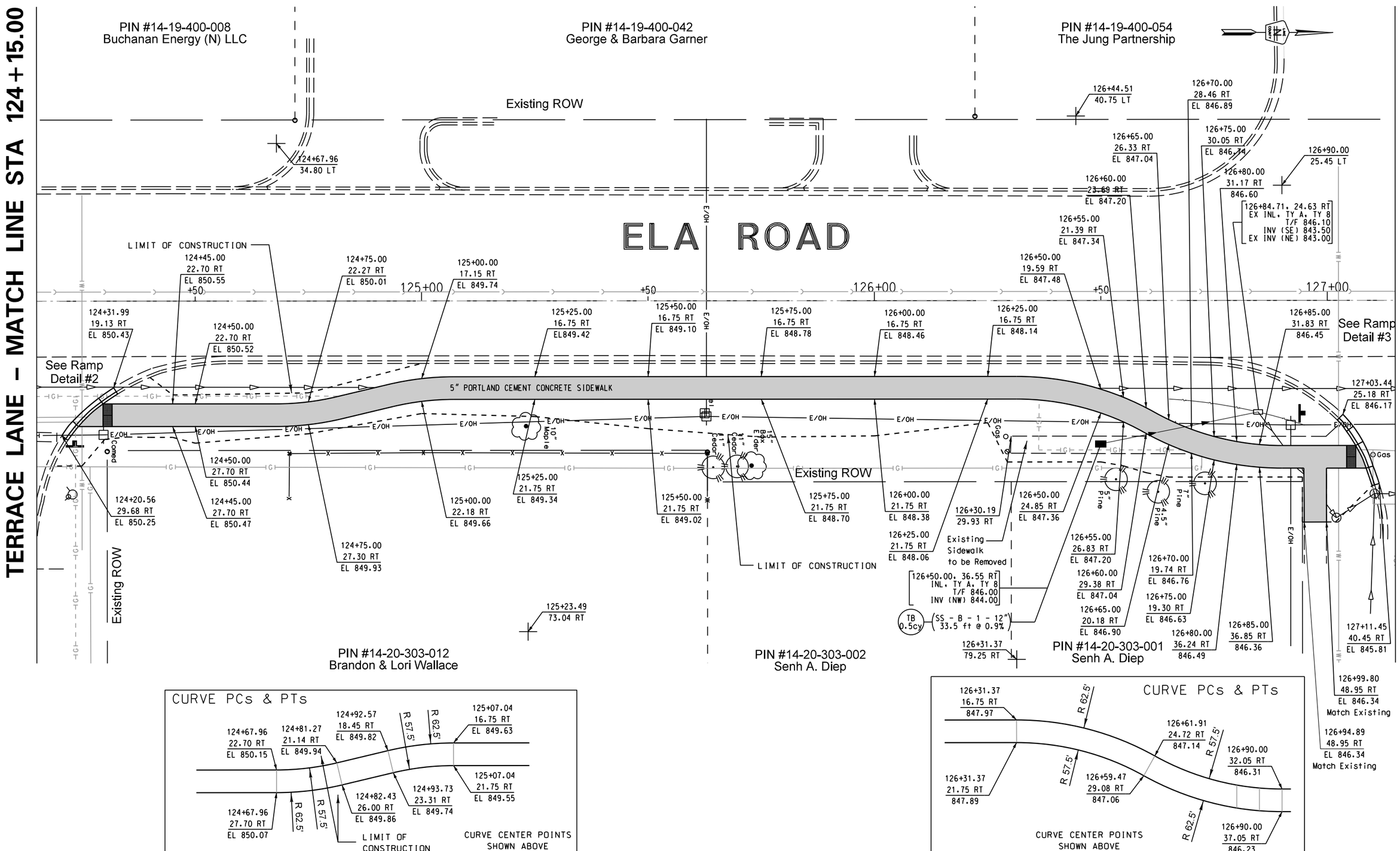

REVISIONS / REMARKS					
NO.	DESCRIPTION	DATE	BY	SURVEYOR:	/
		/ /		DSGNR/LIAISON:	
		/ /		PLOTTED BY:	hdrmc 2/18/2016

0 10 20

LakeCounty
Division of Transportation

ELA ROAD RESURFACING

SIDEWALK CONSTRUCTION STA 124+15.00 TO 127+15.00

ROUTE	SECTION	SECTION NUMBER	SHEET	SHEETS
CH60	144	15-00144-21-RS	34	150

FILE NAME: U:\Design\Sullivan\Ela Rd Sidewalk\Plan Sheets.dgn

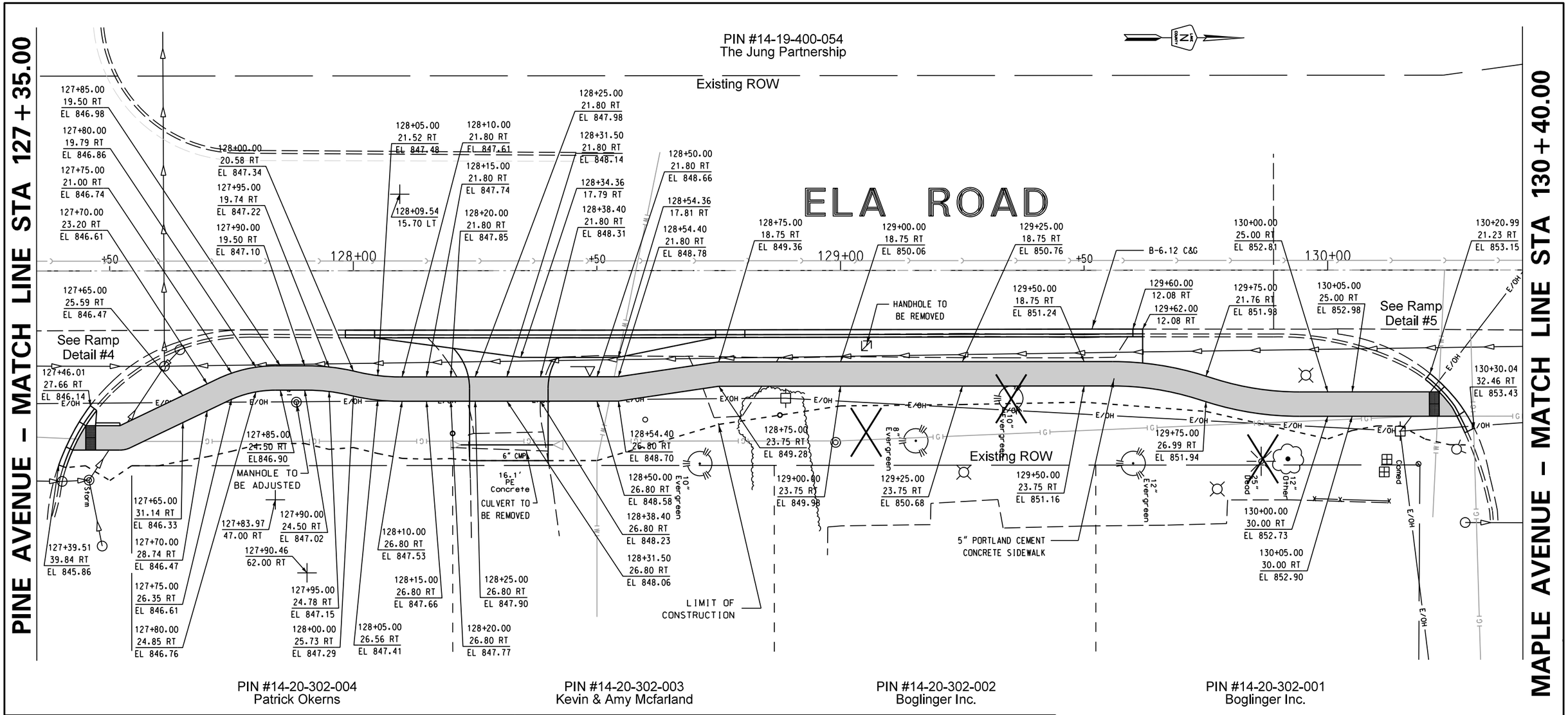

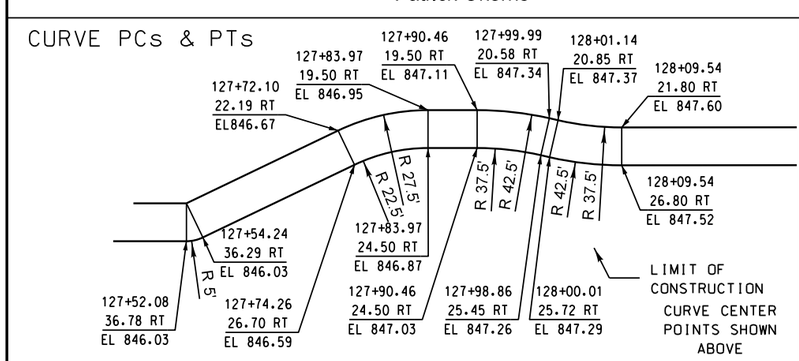

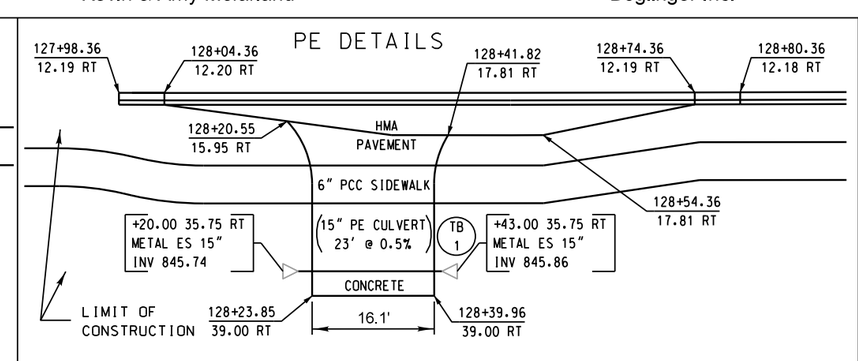

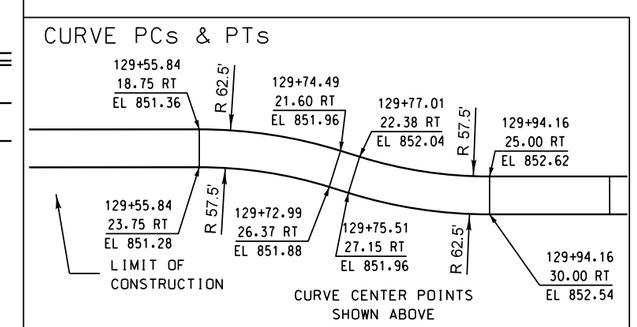

REVISIONS / REMARKS					
NO.	DESCRIPTION	DATE	BY	SURVEYOR:	/
		/ /		DSGNR/LIAISON:	
		/ /		PLOTTED BY:	hdrmc 2/18/2016

0 10 20

LakeCounty Division of Transportation

ELA ROAD RESURFACING

SIDEWALK CONSTRUCTION STA 127+35.00 TO 130+40.00

ROUTE	SECTION	SECTION NUMBER	SHEET	SHEETS
CH60	144	15-00144-21-RS	35	150

FILE NAME: U:\Design\Sullivan\Ela Rd Sidewalk\Plan Sheets.dgn

PIN #14-19-400-054
The Jung Partnership

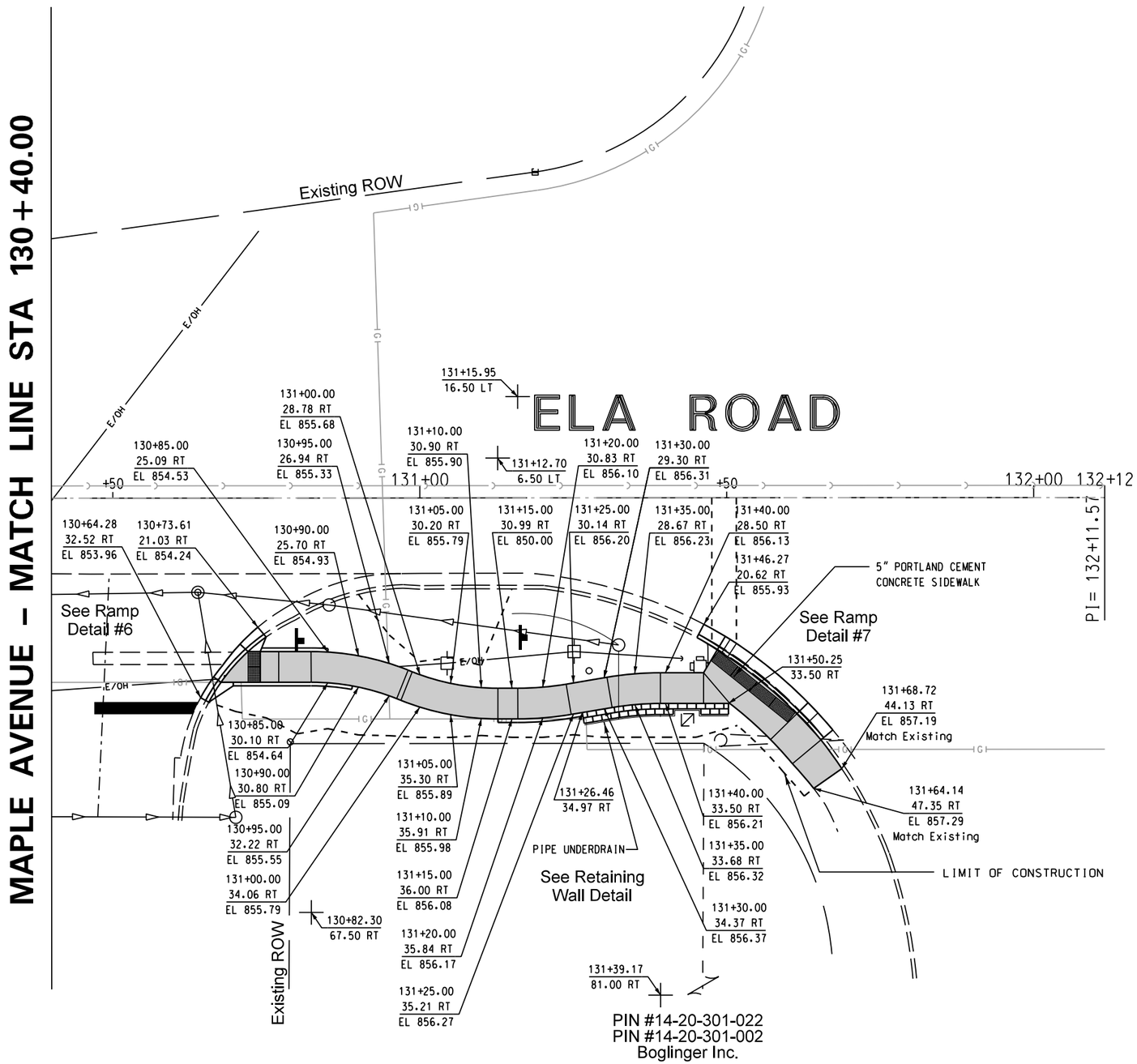

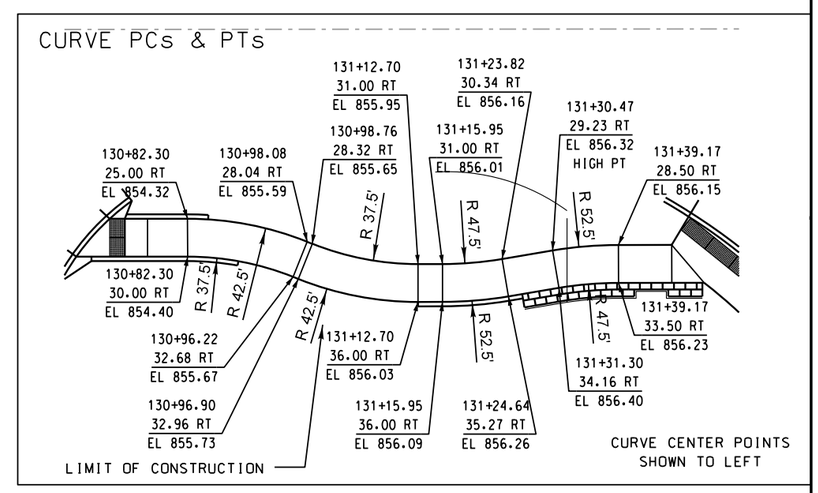

REVISIONS / REMARKS					
NO.	DESCRIPTION	DATE	BY	SURVEYOR:	/
		/ /		DSGNR/LIAISON:	
		/ /		PLOTTED BY:	hdrmc 2/18/2016

0 10 20

LakeCounty
Division of Transportation

ELA ROAD RESURFACING

SIDEWALK CONSTRUCTION STA 130+40.00 TO 132+12.00

ROUTE	SECTION	SECTION NUMBER	SHEET	SHEETS
CH60	144	15-00144-21-RS	36	150

FILE NAME: U:\Design\Sullivan\Ela Rd Sidewalk\Plan Sheets.dgn

ELA ROAD
TRAFFIC CONTROL PLAN

TRAFFIC CONTROL AND PROTECTION GENERAL NOTES
(LCDOT – 2/4/2015 revision)

1. APPLICABLE STANDARDS

   IDOT Standards: 701001-02, 701006-05, 701101-04, 701201-04, 701301-04, 701306-03, 701311-03, 701326-04 701336-06, 701501-06, 701502-06, 701801-05, 701901-04

   LCDOT Standards: LC7000, LC7003, LC7004, LC7005, LC7200

2. No work shall begin until the Traffic Control measures are in place. The Contractor shall at all times provide traffic protection by the application of traffic control devices according to the "Standard Specifications" and as shown on the plans.

3. The permanent traffic control shown on the plans is the minimum requirement. Additional traffic control devices as specified by the above Highway Standards and the Special Provisions shall be placed by the Contractor to the satisfaction of the Engineer. All traffic control devices shall be considered included in the lump sum pay item TRAFFIC CONTROL AND PROTECTION (SPECIAL) unless otherwise shown on the plans or in the special provisions.

4. All traffic control warning signs and associated signing mounted with the warning signs shall have black legends and borders on fluorescent orange reflective sheeting.

5. All construction signs, barricades and other devices required to control traffic shall be furnished, installed and maintained by the Contractor.

   - The Contractor shall furnish and install two weighted sand bags on each Type II barricade.
   - The Contractor shall furnish and install a minimum of four weighted sand bags on each Type III barricade.

6. All traffic control devices shall be removed, covered or turned away from traffic immediately when they are no longer necessary. When a sign is covered, its post shall have a reflective 3 inch x 6 inch delineator installed.

7. The sign spacing for the above Highway Standards shall be according to the Sign Spacing Table shown on this Traffic Control Plan.

8. Road name plates shall be installed on the "ROAD WORK AHEAD" signs at the intersections shown on this Traffic Control Plan. The road name plates shall be 9 inch blanks with 6 inch uppercase and 5 inch lowercase lettering. The road name plates shall be furnished by the Contractor.

9. "ROAD WORK AHEAD" signs shall be equipped with mono-directional Type A amber flashing lights.

10. When milled pavement is open to traffic the grade difference between adjacent lanes shall be limited to a maximum of 1.5 inches. The grade difference may be increased to a maximum of 3 inches with the following

    - A 3:1 or flatter slope is provided between lanes.
    - Written approval from the Engineer.

SIGN NO.		SIGN TYPE
1		W20-1 (O)-48
2		W17-I 100 (O)-9xVARIABLE
3		M6-1R (O)-2115
4		M6-1L (O)-2115
5		M6-3 (O)-2115
6		M6-4 (O)-2115

POSTED SPEED LIMIT
ELA ROAD - 30-45 MPH
CUBA ROAD - 35-40 MPH
BRAEMER LANE - 20 MPH
US ROUTE 12 - 45 MPH
TERRACE LANE - 20 MPH
PINE AVENUE - 20 MPH
MAPLE AVENUE - 20 MPH
IL ROUTE 22 - 35-40 MPH

TRAFFIC CONTROL SIGN SPACING TABLE

55 MPH	500 FT.
45-50 MPH	350 FT.
<45 MPH	200 FT.

REVISIONS / REMARKS

NO.	DESCRIPTION	DATE	BY		
		/ /		SURVEYOR:	/
		/ /		DSGNR/LIAISON:	KDN
		/ /		PLOTTED BY:	hdl7512 2/18/2016

ELA ROAD RESURFACING

LakeCounty Division of Transportation

TRAFFIC CONTROL PLAN
ELA ROAD

ROUTE	SECTION	SECTION NUMBER	SHEET	SHEETS
CH60	144	15-00144-21-RS	37	150

FILE NAME: U:\Design\Nauman\15-00144-21-RS Ela Rd Resurfacing\Plans\15-00144-21-RS.dgn

REVISIONS / REMARKS					
NO.	DESCRIPTION	DATE	BY	SURVEYOR:	/
		/ /		DSGNR/LIAISON:	KDN
		/ /		PLOTTED BY:	hd17512 2/18/2016

SCALES
VERT. 5 0
HORIZ. 0 100 200

ELA ROAD RESURFACING

LakeCounty
Division of Transportation

TRAFFIC CONTROL PLAN

ELA ROAD

ROUTE	SECTION	SECTION NUMBER	SHEET	SHEETS
CH60	144	15-00144-21-RS	38	150

FILE NAME: U:\Design\Nauman\15-00144-21-RS Ela Rd Resurfacing\Plans\15-00144-21-RS.dgn

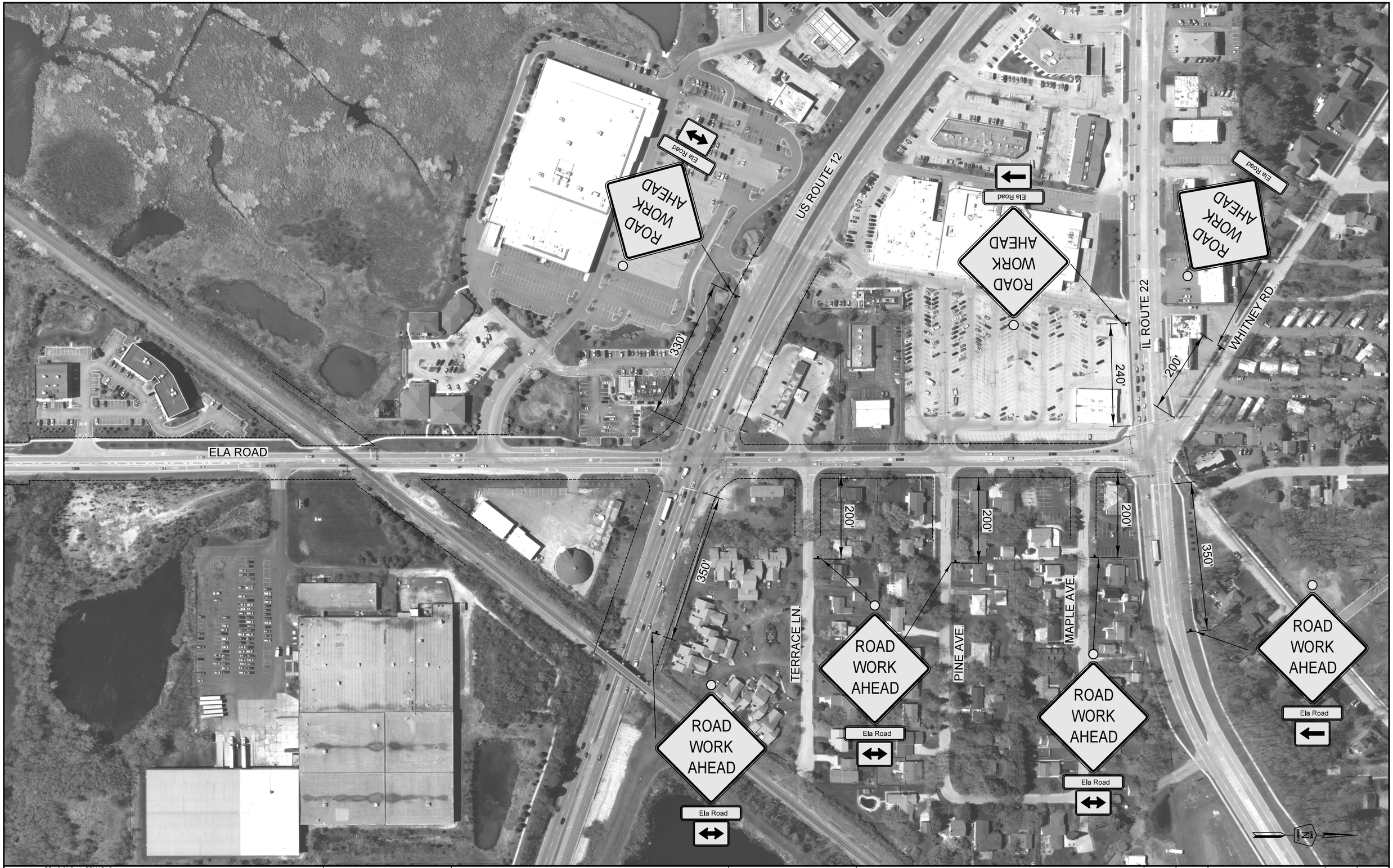

REVISIONS / REMARKS					
NO.	DESCRIPTION	DATE	BY	SURVEYOR:	/
		/ /		DSGNR/LIAISON:	KDN
		/ /		PLOTTED BY:	hdl7512 2/18/2016

VERT 5 0

SCALES HORIZ. 0 100 200

ELA ROAD RESURFACING

LakeCounty Division of Transportation

TRAFFIC CONTROL PLAN

ELA ROAD

ROUTE	SECTION	SECTION NUMBER	SHEET	SHEETS
CH60	144	15-00144-21-RS	39	150

FILE NAME: U:\Design\Nauman\15-00144-21-RS Ela Rd Resurfacing\Plans\15-00144-21-RS.dgn

EROSION CONTROL PLAN
& STORMWATER POLLUTION PREVENTION PLAN

THIS PROJECT DISTURBS 0.33 ACRES OF TOTAL LAND AREA.
COMPLIANCE WITH THE NATIONAL POLLUTION DISCHARGE ELIMINATION SYSTEM (NPDES)
STORMWATER PERMIT IS ONLY NECESSARY IF A PROJECT DISTURBS 1.0 OR MORE ACRES OF
TOTAL LAND AREA; AN NPDES STORMWATER PERMIT WILL NOT BE REQUIRED FOR THIS PROJECT.

LAKE COUNTY DIVISION OF TRANSPOTATION
SOIL EROSION AND SEDIMENT CONTROL GENERAL NOTES

A. AREAS OR EMBANKMENTS WITH 2:1 SLOPES OR STEEPER SHALL BE STABILIZED WITH SOD OR EROSION CONTROL BLANKET (SPECIAL) IN COMBINATION WITH SEEDING.

B. ANY SEDIMENT OR SOIL TRACKED OFF THE SITE SHALL BE REMOVED BY SCRAPING OR STREET SWEEPING AS ACCUMULATIONS WARRANT AND TRANSPORTED TO A CONTROLLED SEDIMENT DISPOSAL AREA. THIS WORK WILL NOT BE PAID FOR SEPARATELY BUT SHALL BE INCLUDED IN THE CONTRACT.

C. THE CONTRACTOR SHALL BE RESPONSIBLE FOR RETURNING ALL EXISTING AREAS (TO REMAIN) AFFECTED BY CONSTRUCTION ACTIVITIES, EQUIPMENT, OR LABORERS TO THE ORIGINAL UNDISTURBED CONDITIONS. THE CONTRACTOR SHALL ALSO BE RESPONSIBLE FOR PROTECTING ALL NEW WORK UNTIL THE COMPLETION OF THE CONTRACT.

D. PERIMETER EROSION BARRIER SHALL BE INSTALLED AT LOCATIONS SPECIFIED IN THE PLANS AT 1 FOOT OUTSIDE THE TOE OF SLOPE OR INSIDE THE RIGHT-OF-WAY WHICHEVER IS CLOSER TO THE CENTERLINE, OR AS DIRECTED BY THE ENGINEER PRIOR TO THE START OF ANY EARTHWORK, CULVERT, OR STORM SEWER CONSTRUCTION.

E. THE PERIMETER EROSION BARRIER SHALL REMAIN IN PLACE UNTIL ALL DISTURBED AREAS HAVE BEEN STABILIZED WITH VEGETATION. AT THIS TIME, THE PERIMETER EROSION BARRIER SHALL BE REMOVED AND AREAS DAMAGED BY THE PERIMETER EROSION BARRIER REMOVAL SHALL BE RESTORED. THE RESTORATION OF THE AREA DISTURBED BY THE PERIMETER EROSION BARRIER REMOVAL SHALL BE INCLUDED IN THE PAY ITEM OF PERIMETER EROSION BARRIER.

F. THE INSTALLATION & REMOVAL OF PERIMETER EROSION BARRIER SHALL BE PAID FOR UNDER THE ITEM OF PERIMETER EROSION BARRIER. MAINTENANCE OF PERIMETER EROSION BARRIER SHALL BE PAID FOR UNDER THE ITEM OF MAINTENANCE OF TEMPORARY EROSION CONTROL SYSTEMS.

G. TEMPORARY DITCH CHECKS SHALL BE CONSTRUCTED ACCORDING TO THE STANDARD DETAIL SHOWN ON THE PLANS OR AS DIRECTED BY THE ENGINEER. THE DITCH CHECKS SHALL BE INSTALLED AS GRADING PROGRESSES THROUGH THE PROJECT.

H. ALL SEEDED AREAS SHALL BE COVERED WITH EROSION CONTROL BLANKET.

DRAINAGE BASINS OF LAKE COUNTY

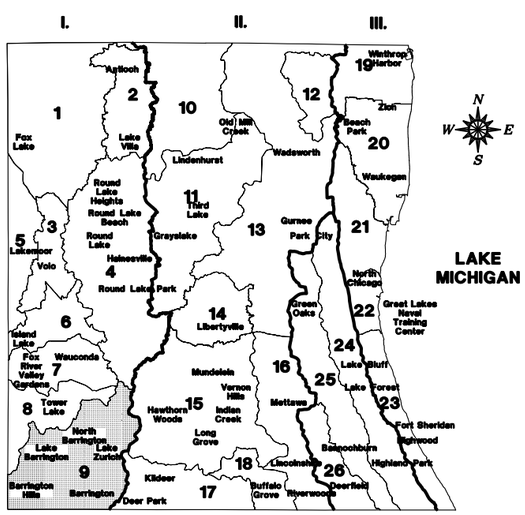

I. FOX RIVER WATERSHED
1. Upper Fox River
2. Sequoit Creek
3. Fish Lake Drain
4. Squaw Creek
5. Lower Fox River
6. Mutton Creek
7. Slocum Lake Drain
8. Tower Lake Drain
9. Flint Creek

II. DES PLAINES RIVER WATERSHED
10. North Mill Creek
11. Mill Creek
12. Newport Drainage Ditch
13. Upper Des Plaines River
14. Bull Creek
15. Indian Creek
16. Lower Des Plaines River
17. Buffalo Creek
18. Aptakisic Creek

III. LAKE MICHIGAN WATERSHED
19. Kellogg Creek
20. Dead River
21. Waukegan River
22. Pettibone Creek
23. Bluff/Ravine

IV. CHICAGO RIVER WATERSHED
24. Skokie River
25. Middle Fork
26. West Fork

LAKE COUNTY STORMWATER MANAGEMENT COMMISSION
SOIL EROSION AND SEDIMENT CONTROL CONSTRUCTION NOTES

A. SEDIMENT CONTROL MEASURES SHALL BE INSTALLED PRIOR TO THE COMMENCEMENT OF HYDROLOGIC DISTURBANCE OF UPLAND AREAS.

B. FOR THOSE DEVELOPMENTS THAT REQUIRE A DESIGNATED EROSION CONTROL INSPECTOR (DECI), INSPECTIONS AND DOCUMENTATION SHALL BE PERFORMED, AT A MINIMUM:
- UPON COMPLETION OF SEDIMENT AND RUNOFF CONTROL MEASURES (INCLUDING PERIMETER CONTROLS AND DIVERSIONS), PRIOR TO PROCEEDING WITH ANY OTHER EARTH DISTURBANCE OR GRADING.
- AFTER EVERY SEVEN (7) CALENDAR DAYS OR STORM EVENT WITH GREATER THAN 0.5 INCH OF RAINFALL OR LIQUID EQUIVALENT PRECIPITATION.

C. SOIL DISTURBANCE SHALL BE CONDUCTED IN SUCH A MANNER AS TO MINIMIZE EROSION. IF STRIPPING, CLEARING, GRADING, OR LANDSCAPING ARE TO BE DONE IN PHASES, THE PERMITTEE SHALL PLAN FOR APPROPRIATE SOIL EROSION AND SEDIMENT CONTROL MEASURES.

D. A STABILIZED MAT OF CRUSHED STONE MEETING IDOT GRADATION CA-1 UNDERLAIN WITH FILTER FABRIC AND IN ACCORDANCE WITH THE ILLINOIS URBAN MANUAL, OR OTHER APPROPRIATE MEASURE(S) AS APPROVED BY THE ENFORCEMENT OFFICER, SHALL BE INSTALLED AT ANY POINT WHERE TRAFFIC WILL BE ENTERING OR LEAVING A CONSTRUCTION SITE. SEDIMENT OR SOIL REACHING AN IMPROVED PUBLIC RIGHT-OF-WAY, STREET, ALLEY OR PARKING AREA SHALL BE REMOVED BY SCRAPING OR STREET CLEANING AS ACCUMULATIONS WARRANT AND TRANSPORTED TO A CONTROLLED SEDIMENT DISPOSAL AREA.

E. TEMPORARY DIVERSIONS SHALL BE CONSTRUCTED AS NECESSARY TO DIRECT ALL RUNOFF FROM HYDROLOGICALLY DISTURBED AREAS TO AN APPROPRIATE SEDIMENT TRAP OR BASIN.

F. DISTURBED AREAS SHALL BE STABILIZED WITH TEMPORARY OR PERMANENT MEASURES WITHIN SEVEN (7) CALENDAR DAYS FOLLOWING THE END OF ACTIVE HYDROLOGIC DISTURBANCE OR REDISTURBANCE.

G. ALL STOCKPILES SHALL HAVE APPROPRIATE MEASURES TO PREVENT EROSION. STOCKPILES SHALL NOT BE PLACED IN FLOOD PRONE AREAS OR WETLANDS AND DESIGNATED BUFFERS.

H. SLOPES STEEPER THAN 3H:1V SHALL BE STABILIZED WITH APPROPRIATE MEASURES AS APPROVED BY THE ENFORCEMENT OFFICER.

I. APPROPRIATE EROSION CONTROL BLANKET SHALL BE INSTALLED ON ALL INTERIOR DETENTION BASIN SIDE SLOPES BETWEEN THE NORMAL WATER LEVEL AND HIGH WATER LEVEL.

J. STORM SEWERS THAT ARE OR WILL BE FUNCTIONING DURING CONSTRUCTION SHALL BE PROTECTED BY AN APPROPRIATE SEDIMENT CONTROL MEASURE.

K. IF DEWATERING SERVICES ARE USED, ADJOINING PROPERTIES AND DISCHARGE LOCATIONS SHALL BE PROTECTED FROM EROSION AND SEDIMENTATION. DISCHARGES SHALL BE ROUTED THROUGH AN APPROVED ANIONIC POLYMER DEWATERING SYSTEM OR A SIMILAR MEASURE AS APPROVED BY THE ENFORCEMENT OFFICER. DEWATERING SYSTEMS SHOULD BE INSPECTED DAILY DURING OPERATIONAL PERIODS. THE ENFORCEMENT OFFICER, OR APPROVED REPRESENTATIVE, MUST BE PRESENT AT THE COMMENCEMENT OF DEWATERING ACTIVITIES.

L. IF INSTALLED SOIL EROSION AND SEDIMENT CONTROL MEASURES DO NOT MINIMIZE SEDIMENT LEAVING THE DEVELOPMENT SITE, ADDITIONAL MEASURES SUCH AS ANIONIC POLYMERS OR FILTRATION SYSTEMS MAY BE REQUIRED BY THE ENFORCEMENT OFFICER.

M. ALL TEMPORARY AND PERMANENT EROSION CONTROL MEASURES MUST BE MAINTAINED AND REPAIRED AS NEEDED. THE PROPERTY OWNER SHALL BE ULTIMATELY RESPONSIBLE FOR MAINTENANCE AND REPAIR.

N. ALL TEMPORARY SEDIMENT CONTROL MEASURES SHALL BE REMOVED WITHIN 30 DAYS AFTER FINAL SITE STABILIZATION IS ACHIEVED OR AFTER THE TEMPORARY MEASURES ARE NO LONGER NEEDED.

O. THE EROSION CONTROL MEASURES INDICATED ON THE PLANS ARE THE MINIMUM REQUIREMENTS. ADDITIONAL MEASURES MAY BE REQUIRED, AS DIRECTED BY THE ENGINEER, ENFORCEMENT OFFICER, OR OTHER GOVERNING AGENCY.

EROSION CONTROL PLAN &
STORMWATER POLLUTION PREVENTION PLAN

LEGEND

- PERIMETER EROSION BARRIER, ROLLED EXCELSIOR
- TEMPORARY DITCH CHECK
- INLET PROTECTION SPECIAL
- STORM SEWER
- DITCH FLOW OR OUTFLOW
- INLET FILTER

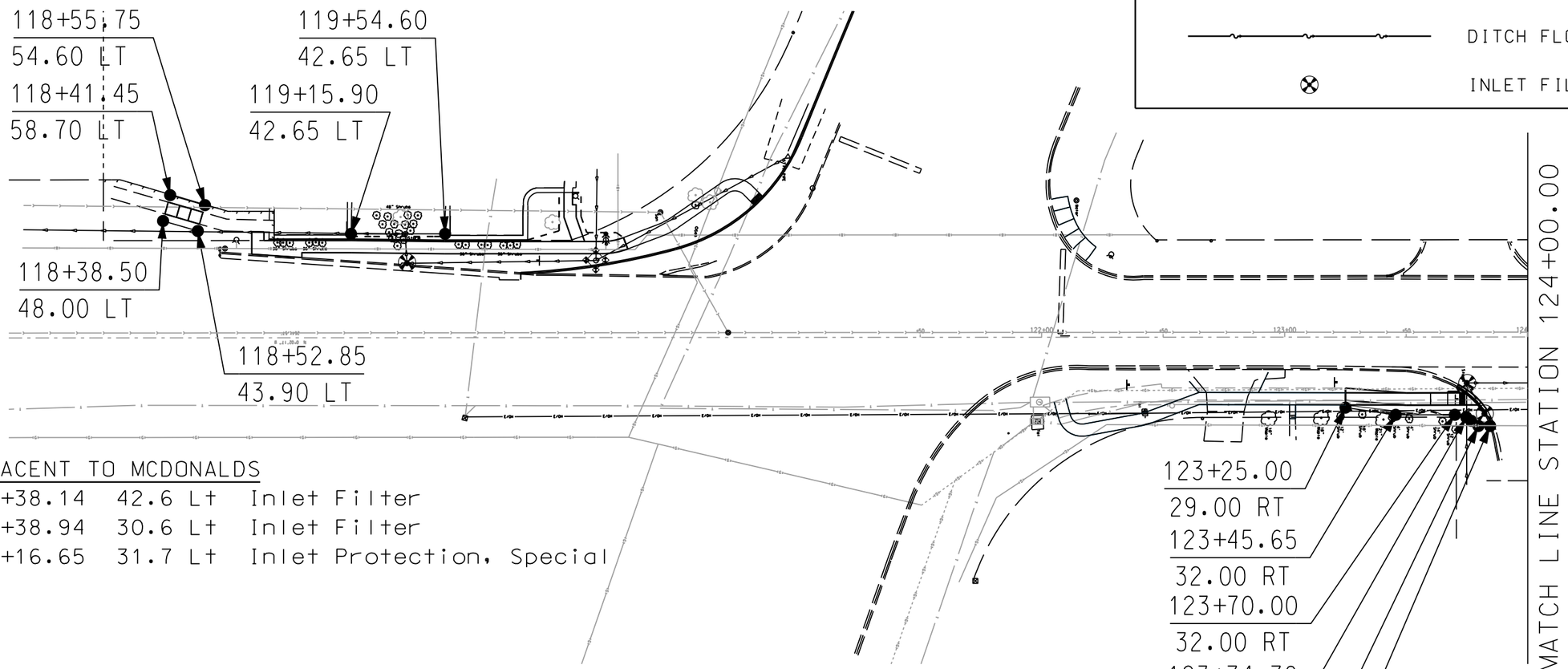

ADJACENT TO MCDONALDS

119+38.14	42.6 Lt	Inlet Filter
119+38.94	30.6 Lt	Inlet Filter
120+16.65	31.7 Lt	Inlet Protection, Special

123+25.00
29.00 RT
123+45.65
32.00 RT
123+70.00
32.00 RT
123+74.70
33.00 RT
123+79.70
36.60 RT
123+84.50
36.60 RT

NORTH OF US 12 TO TERRACE LANE

123+74.88	18.9 Rt	Inlet Filter
123+82.16	31.6 Rt	Inlet Filter

ESTIMATED QUANTITIES

628 FEET - PERIMETER EROSION BARRIER, ROLLED EXCELSIOR

2 EACH (28 FT) - TEMPORARY DITCH CHECK, URETHANE FOAM/GEOTEXTILE

7 EACH - INLET PROTECTION, SPECIAL

9 EACH - INLET FILTER

REVISIONS / REMARKS					
NO.	DESCRIPTION	DATE	BY	SURVEYOR:	/
		/ /		DSGNR/LIAISON:	
		/ /		PLOTTED BY:	hdrmc 2/18/2016

0 50 100

LakeCounty
Division of Transportation

ELA ROAD RESURFACING
EROSION CONTROL PLAN

ROUTE	SECTION	SECTION NUMBER	SHEET	SHEETS
CH60	144	15-00144-21-RS	41	150

FILE NAME: U:\Design\Sullivan\Ela Rd Sidewalk\Plan Sheets.dgn

EROSION CONTROL PLAN & STORMWATER POLLUTION PREVENTION PLAN

LEGEND

- PERIMETER EROSION BARRIER, ROLLED EXCELSIOR
- TEMPORARY DITCH CHECK
- INLET PROTECTION SPECIAL
- STORM SEWER
- DITCH FLOW OR OUTFLOW
- INLET FILTER

PINE AVENUE TO MAPLE AVENUE

127+40.21	43.2 Rt	Inlet Filter	
127+48.42	56.5 Rt	Inlet Protection, Special	
127+60.00	37.6 Rt	Ditch Check	
127+61.22	19.6 Rt	Inlet Protection, Special	
127+64.40	16.2 Rt	Inlet Filter	
127+94.70	34.4 Rt	Ditch Check	
130+28.18	51.8 Rt	Inlet Protection, Special	

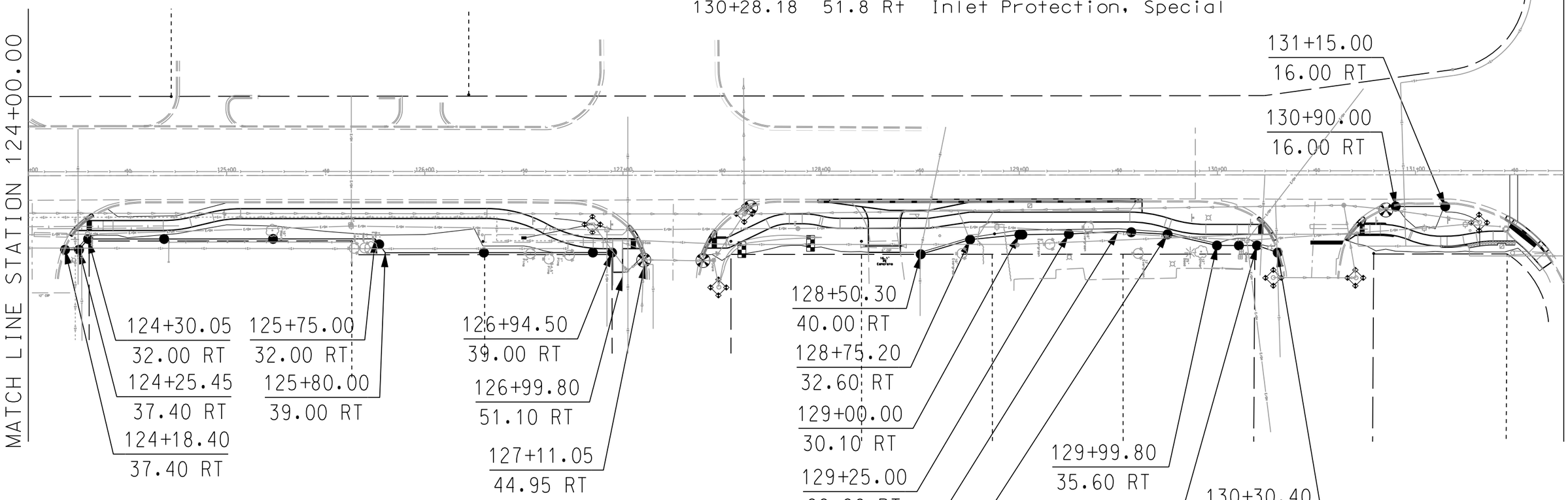

TERRACE LANE TO PINE AVENUE

126+50.00	31.7 Rt	Inlet Filter (after installation)	
126+84.70	24.6 Rt	Inlet Protection, Special	
127+10.50	42.8 Rt	Inlet Filter	

MAPLE AVENUE TO IL 22

130+70.00	52.0 Rt	Inlet Protection, Special	
130+85.22	17.4 Rt	Inlet Filter	
131+32.38	23.4 Rt	Inlet Protection, Special	

REVISIONS / REMARKS

NO.	DESCRIPTION	DATE	BY		
		/ /		SURVEYOR:	/
		/ /		DSGNR/LIAISON:	
		/ /		PLOTTED BY:	hdrmc 2/18/2016

0 50 100

LakeCounty Division of Transportation

ELA ROAD RESURFACING

EROSION CONTROL PLAN

ROUTE	SECTION	SECTION NUMBER	SHEET	SHEETS
CH60	144	15-00144-21-RS	42	150

FILE NAME: U:\Design\Sullivan\Ela Rd Sidewalk\Plan Sheets.dgn

** NOTES

The Length is measured along the face of the Wall - won't match the station difference because of the centerline curve and the wall curve at the south end.

The VIEW of the retaining wall is shown from the perspective of looking at the face of wall from the back of curb, towards the Right-of-Way. (Stations increase from south to north on plans.)

3/4" Expansion Joints shall be constructed between the retaining wall and the sidewalk. The cost of the expansion joints shall be included in the unit price for PORTLAND CEMENT CONCRETE SIDEWALK 5 INCH.

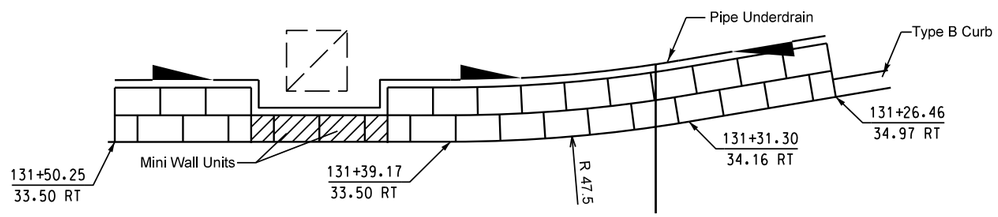

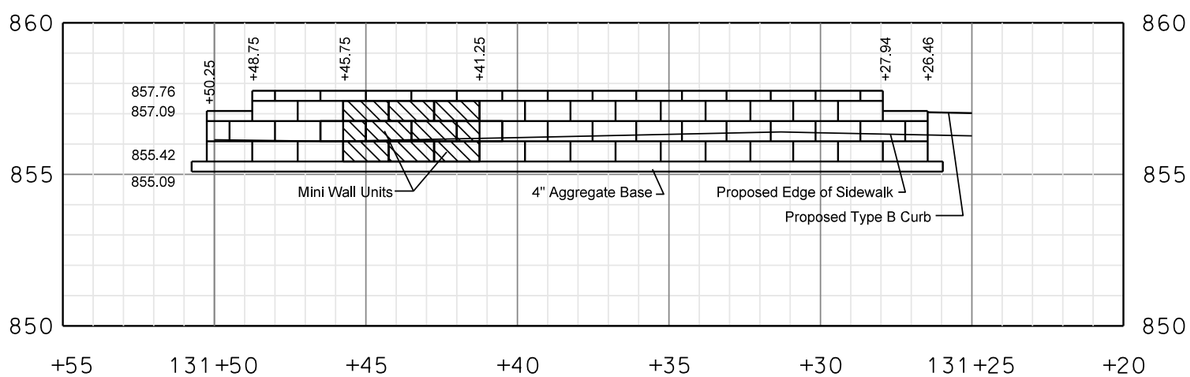

TOP VIEW

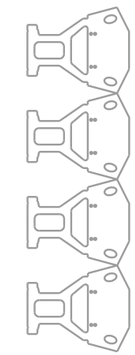

NOT TO SCALE

BLOCK DETAILS

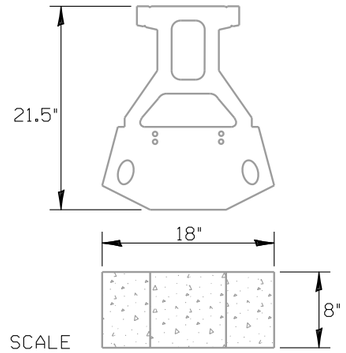

NOT TO SCALE

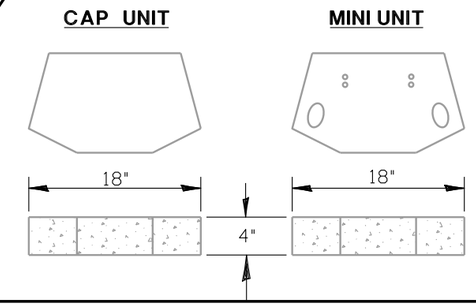

1. AGGREGATE BASE COURSE
   4" LEVELING PAD
   6" SIDEWALK BASE
2. PORTLAND CEMENT CONCRETE SIDEWALK 5 INCH
3. SEGMENTAL BLOCK WALL
4. PIPE UNDERDRAIN 4"
5. 3/4" EXPANSION JOINT
6. TOPSOIL & SODDING
7. SELECT GRANULAR BACKFILL

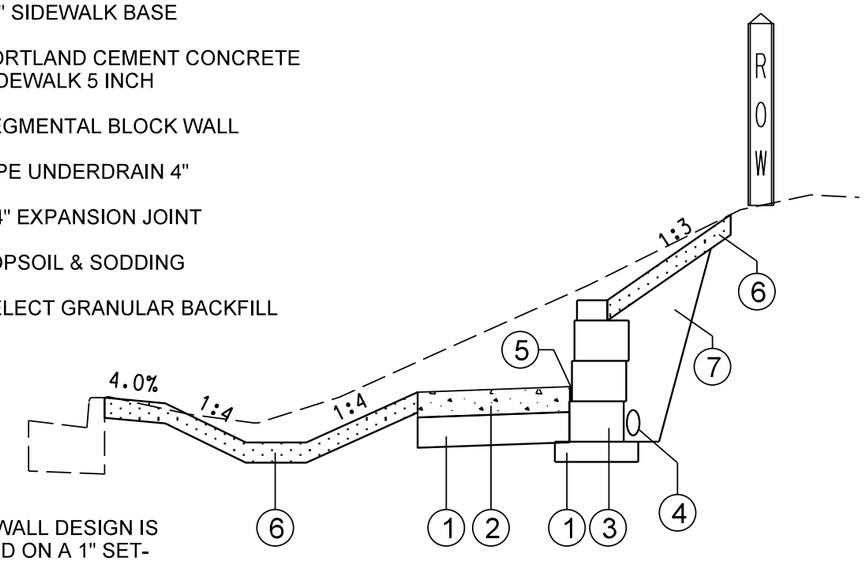

THE WALL DESIGN IS BASED ON A 1" SET-BACK FOR EACH LAYER.

REVISIONS / REMARKS					
NO.	DESCRIPTION	DATE	BY	SURVEYOR:	/
		/ /		DSGNR/LIAISON:	
		/ /		PLOTTED BY:	hdrmc 2/18/2016

0 2.5 5.0

LakeCounty
Division of Transportation

ELA ROAD RESURFACING

RETAINING WALL DETAILS

ROUTE	SECTION	SECTION NUMBER	SHEET	SHEETS
CH60	144	15-00144-21-RS	43	150

FILE NAME: U:\Design\Sullivan\Ela Rd Sidewalk\ElaRd Cross Sections.dgn

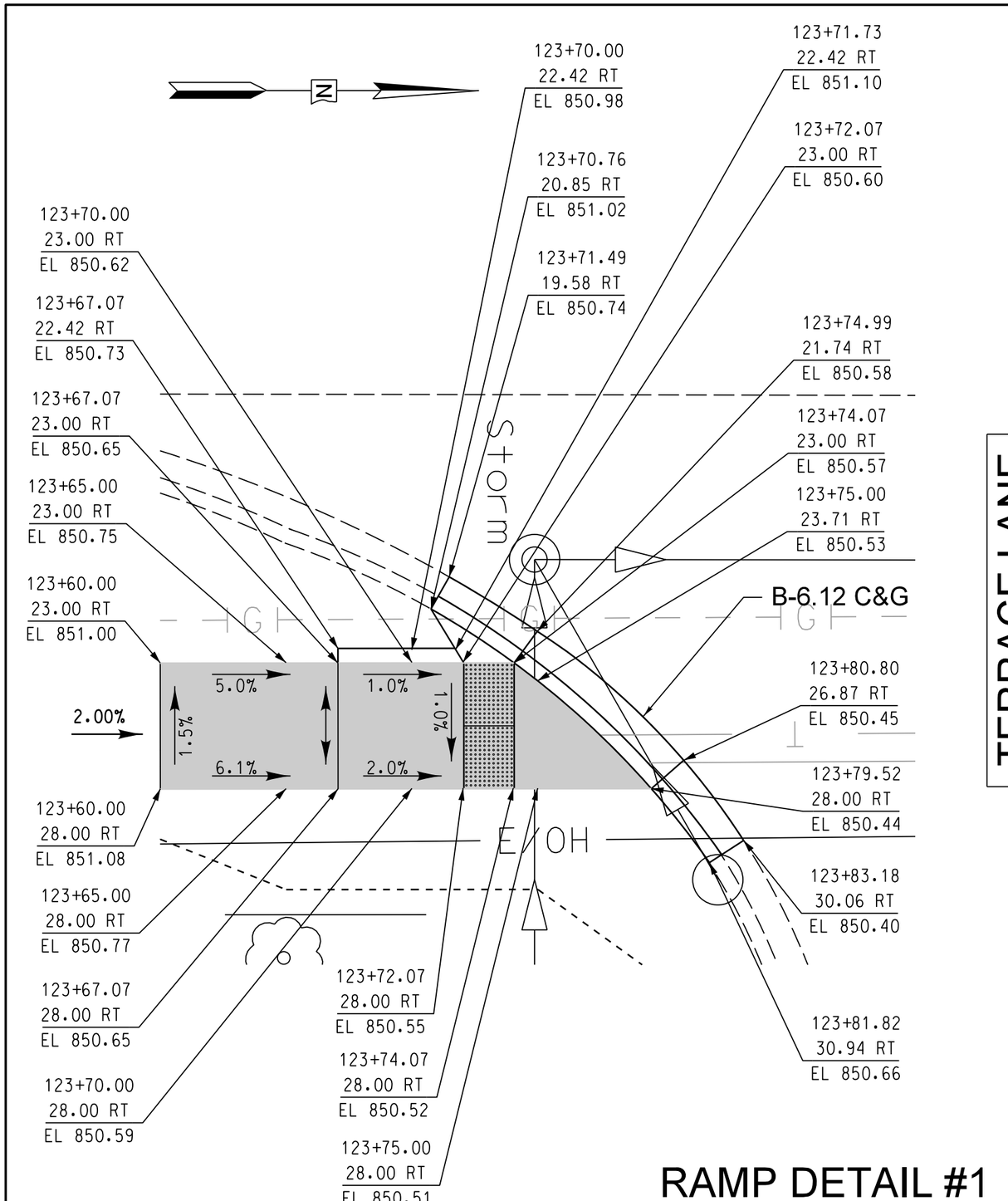

RAMP DETAIL #1

TERRACE LANE

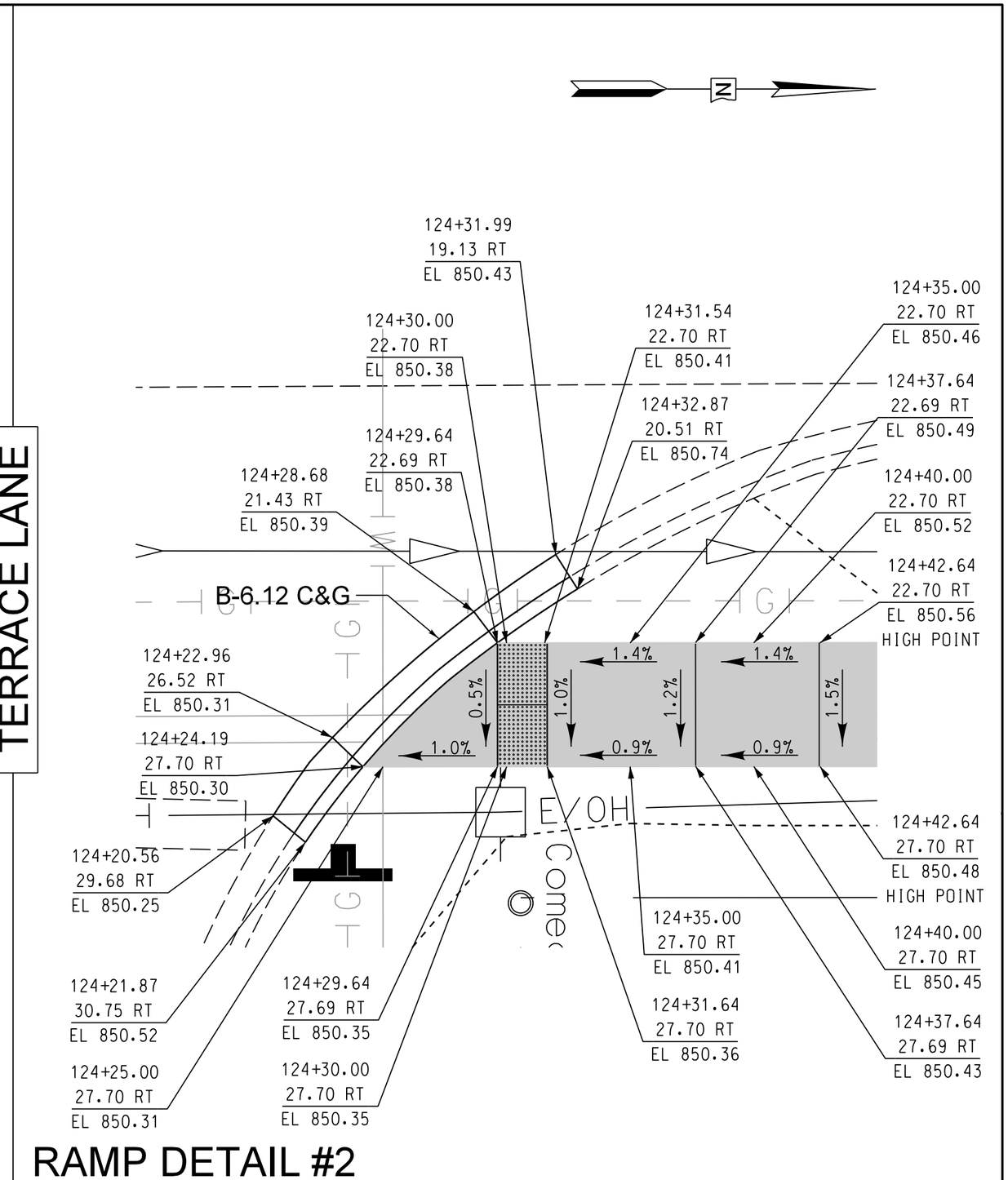

RAMP DETAIL #2

REVISIONS / REMARKS					
NO.	DESCRIPTION	DATE	BY	SURVEYOR:	/
		/ /		DSGNR/LIAISON:	
		/ /		PLOTTED BY:	hdrmc 2/18/2016

0 2.5 5.0

LakeCounty
Division of Transportation

ELA ROAD RESURFACING
SIDEWALK RAMP DETAIL SHEET

ROUTE	SECTION	SECTION NUMBER	SHEET	SHEETS
CH60	144	15-00144-21-RS	44	150

FILE NAME: U:\Design\Sullivan\Ela Rd Sidewalk\Plan Sheets.dgn

RAMP DETAIL #3

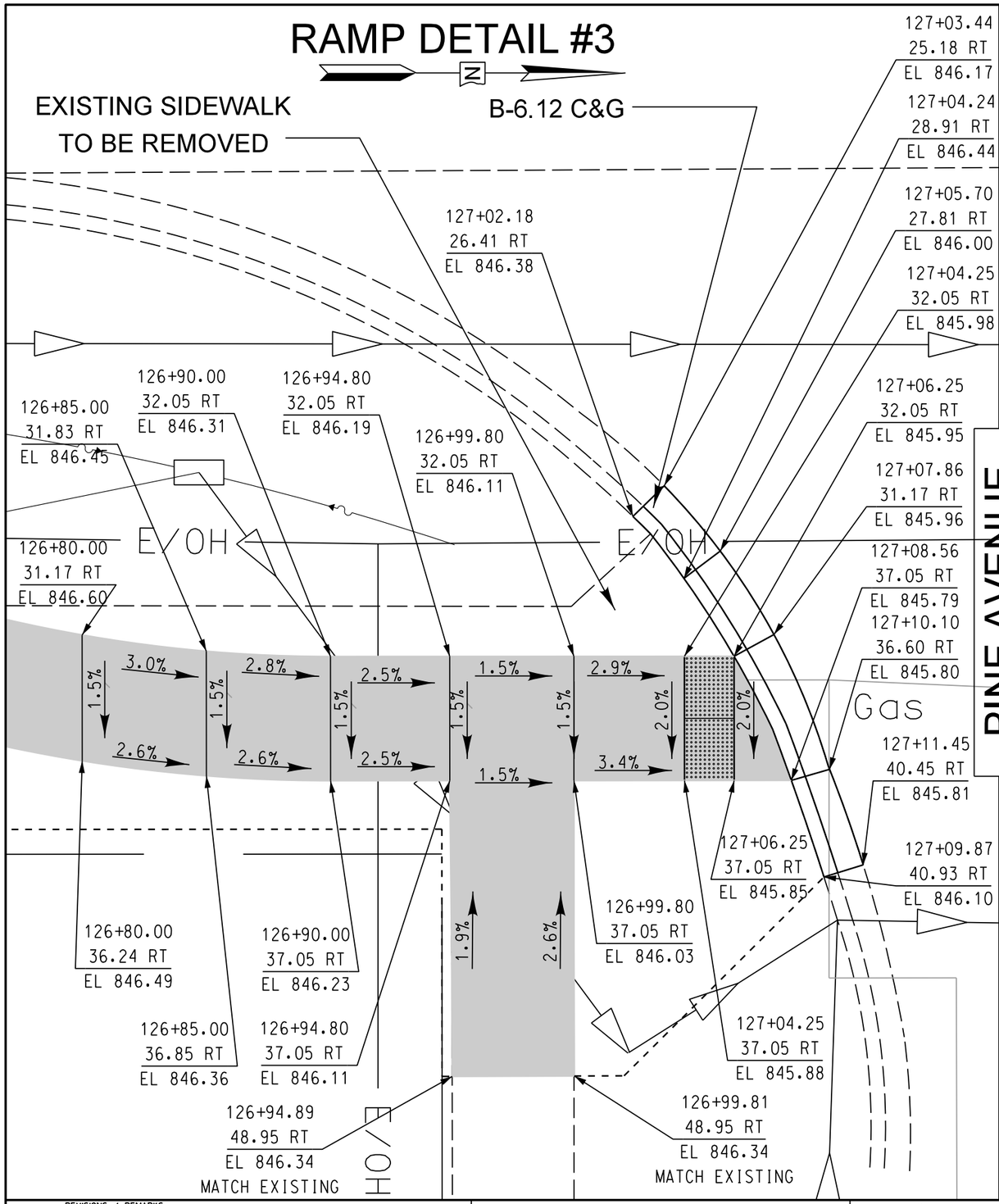

RAMP DETAIL #4

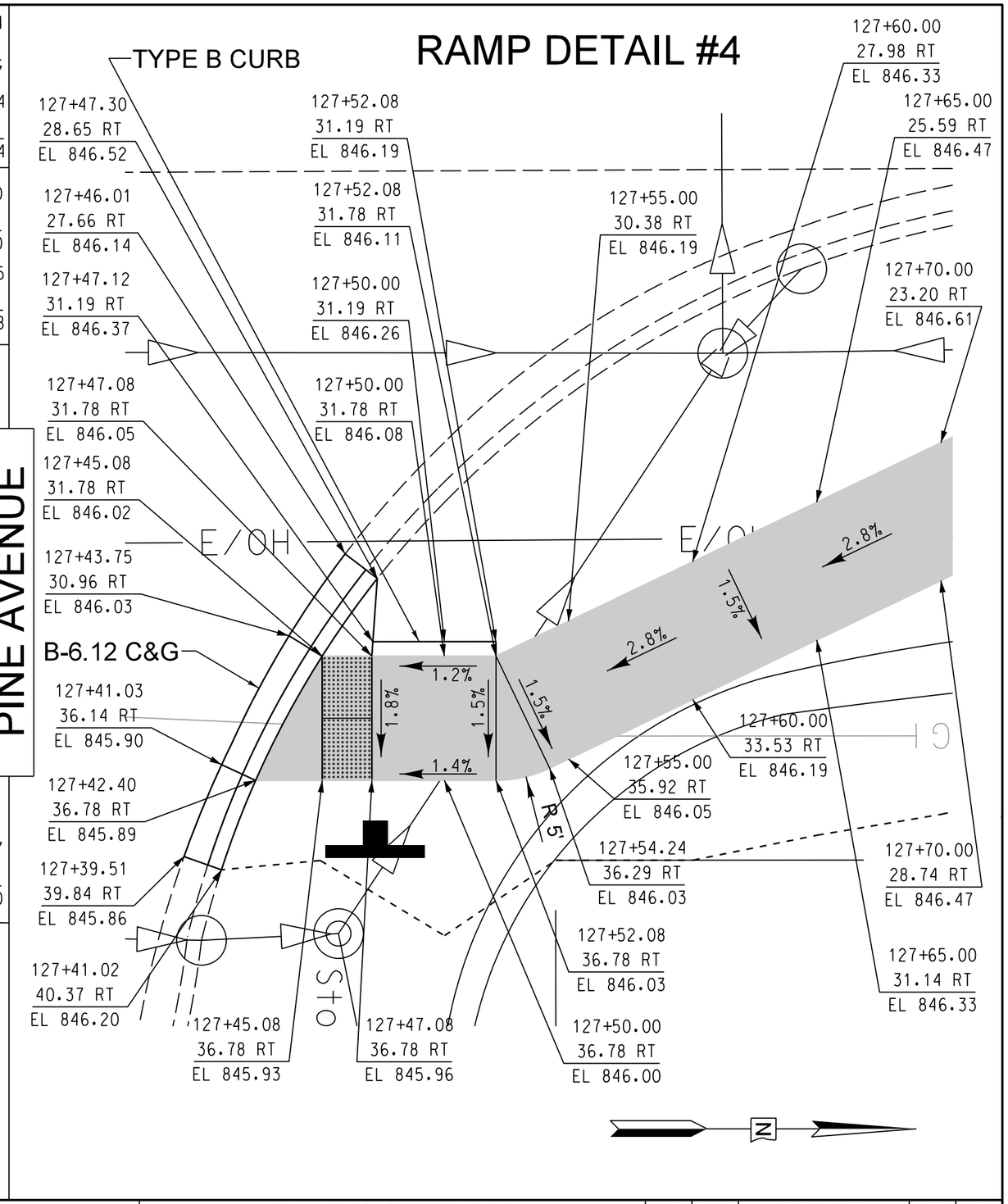

REVISIONS / REMARKS					
NO.	DESCRIPTION	DATE	BY	SURVEYOR:	/
		/ /		DSGNR/LIAISON:	
		/ /		PLOTTED BY:	hdrmc 2/18/2016

0 2.5 5.0

LakeCounty
Division of Transportation

ELA ROAD RESURFACING

SIDEWALK RAMP DETAIL SHEET

ROUTE	SECTION	SECTION NUMBER	SHEET	SHEETS
CH60	144	15-00144-21-RS	45	150

FILE NAME: U:\Design\Sullivan\Ela Rd Sidewalk\Plan Sheets.dgn

RAMP DETAIL #5

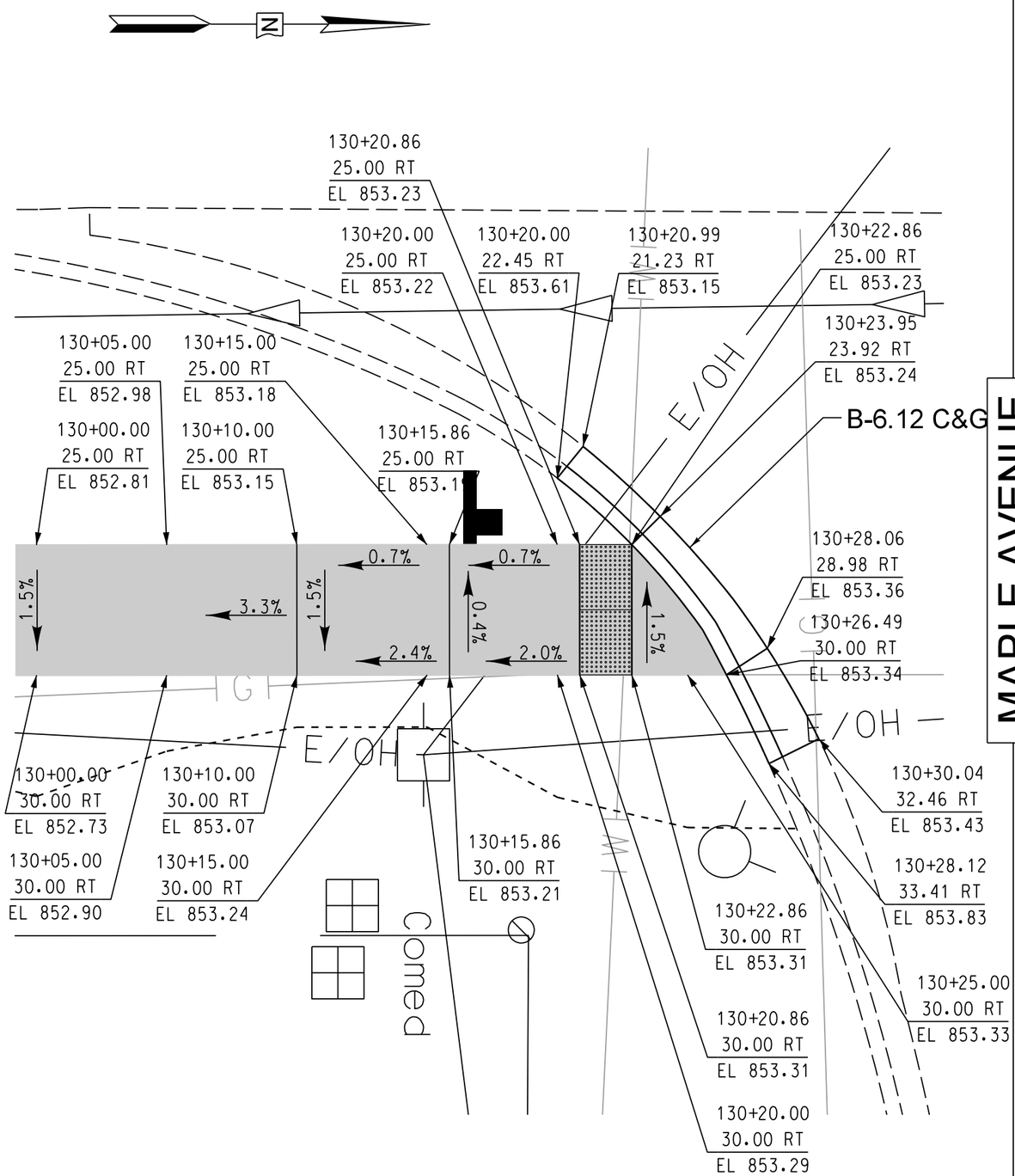

MAPLE AVENUE

RAMP DETAIL #6

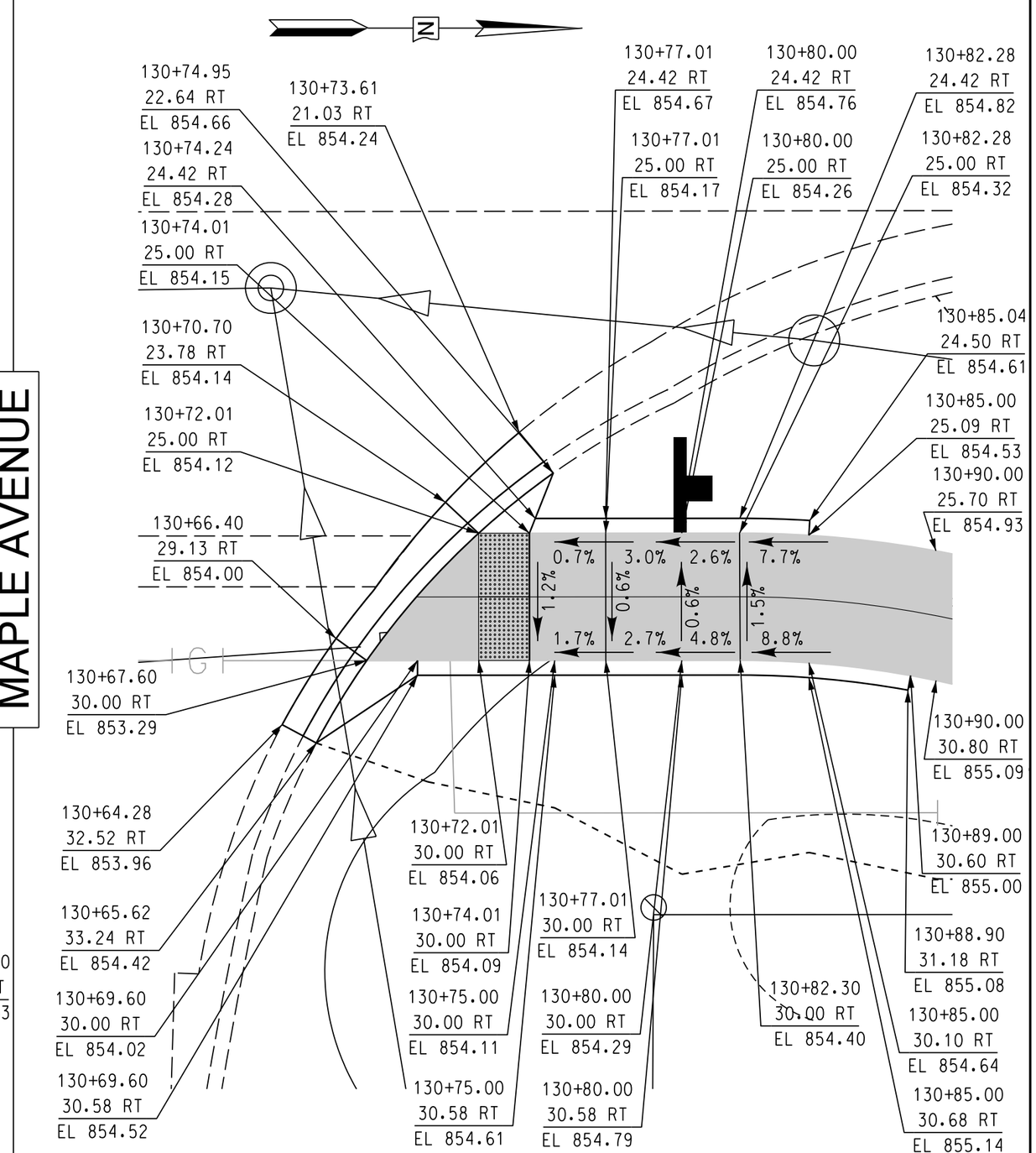

REVISIONS / REMARKS					
NO.	DESCRIPTION	DATE	BY	SURVEYOR:	/
		/ /		DSGNR/LIAISON:	
		/ /		PLOTTED BY:	hdrmc 2/18/2016

0 2.5 5.0

LakeCounty
Division of Transportation

ELA ROAD RESURFACING

SIDEWALK RAMP DETAIL SHEET

ROUTE	SECTION	SECTION NUMBER	SHEET	SHEETS
CH60	144	15-00144-21-RS	46	150

FILE NAME: U:\Design\Sullivan\Ela Rd Sidewalk\Plan Sheets.dgn

RAMP DETAIL #7

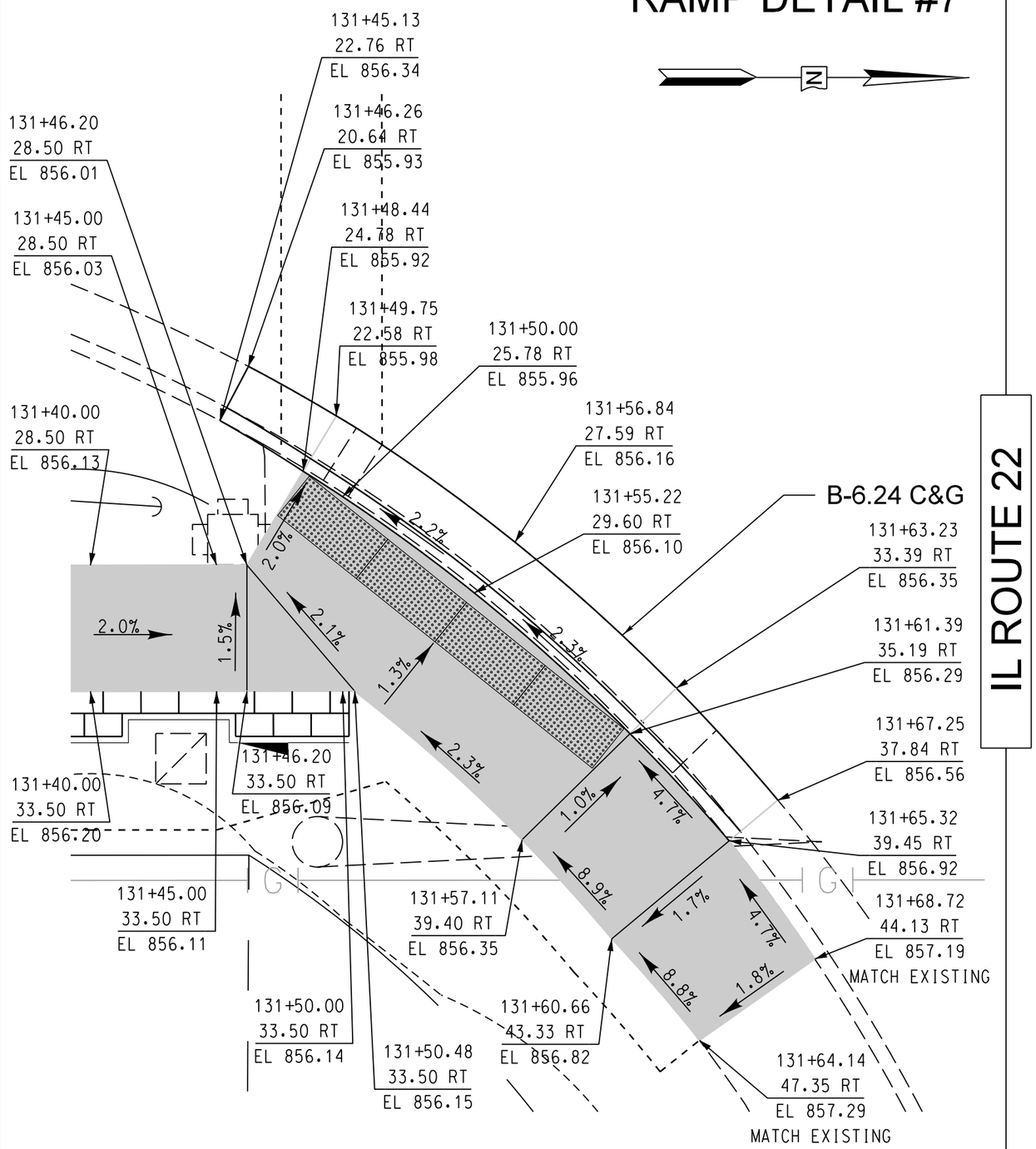

REVISIONS / REMARKS					
NO.	DESCRIPTION	DATE	BY	SURVEYOR:	/
		/ /		DSGNR/LIAISON:	
		/ /		PLOTTED BY:	hdrmc 2/18/2016

0 2.5 5.0

LakeCounty
Division of Transportation

ELA ROAD RESURFACING

SIDEWALK RAMP DETAIL SHEET

ROUTE	SECTION	SECTION NUMBER	SHEET	SHEETS
CH60	144	15-00144-21-RS	47	150

FILE NAME: U:\Design\Sullivan\Ela Rd Sidewalk\Plan Sheets.dgn

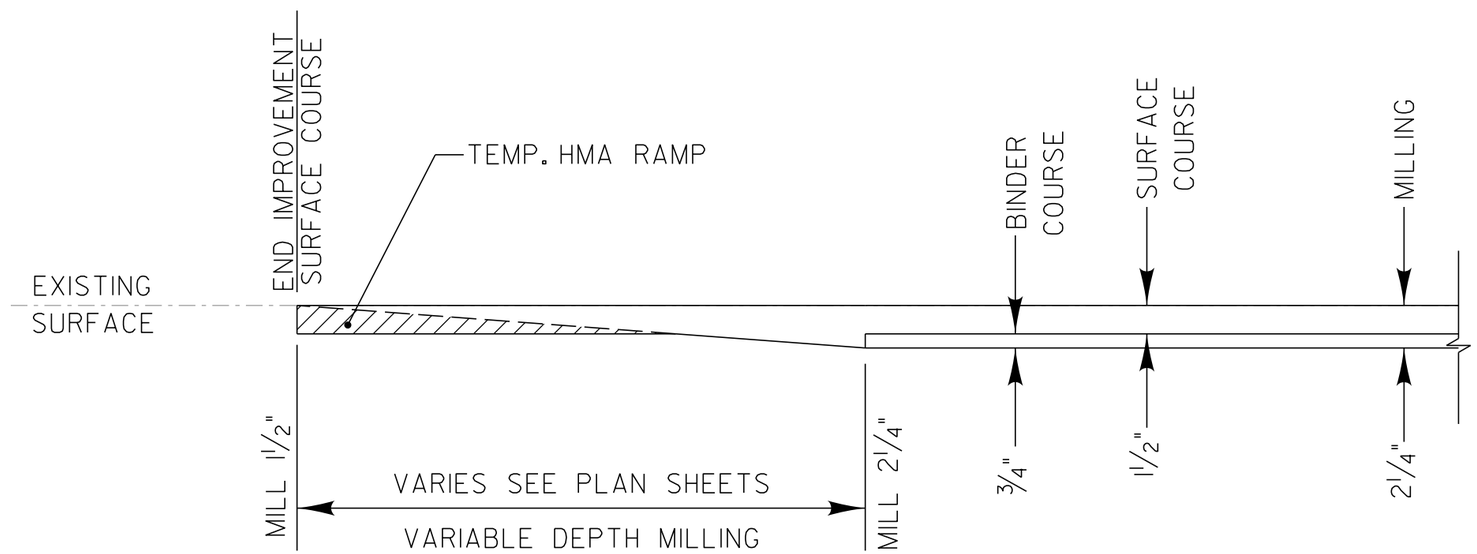

BUTT JOINT DETAIL - 2 1/4" OVERLAY

REVISIONS / REMARKS					
NO.	DESCRIPTION	DATE	BY	SURVEYOR:	/
		/ /		DSGNR/LIAISON:	KON
		/ /		PLOTTED BY:	hd17512 2/18/2016

0.2 VERT 0

SCALES HORIZ. 2 4

ELA ROAD RESURFACING

LakeCounty Division of Transportation

BUTT JOINT DETAILS

ELA ROAD

ROUTE	SECTION	SECTION NUMBER	SHEET	SHEETS
CH60	144	15-00144-21-RS	48	150

FILE NAME: U:\Design\Nauman\15-00144-21-RS Ela Rd Resurfacing\Plans\15-00144-21-RS.dgn

NOTE

CLASS SI CONCRETE (OUTLET) SHALL BE USED THROUGHOUT. THE GUTTER OUTLET WILL BE PAID FOR AT THE CONTRACT UNIT PRICE PER CUBIC YARD FOR CLASS SI CONCRETE (OUTLET), WHICH INCLUDE THE COST OF FURNISHING AND PLACING WELDED WIRE FABRIC IN ACCORDANCE WITH THE STANDARD SPECIFICATIONS AND THE DETAILS SHOWN.

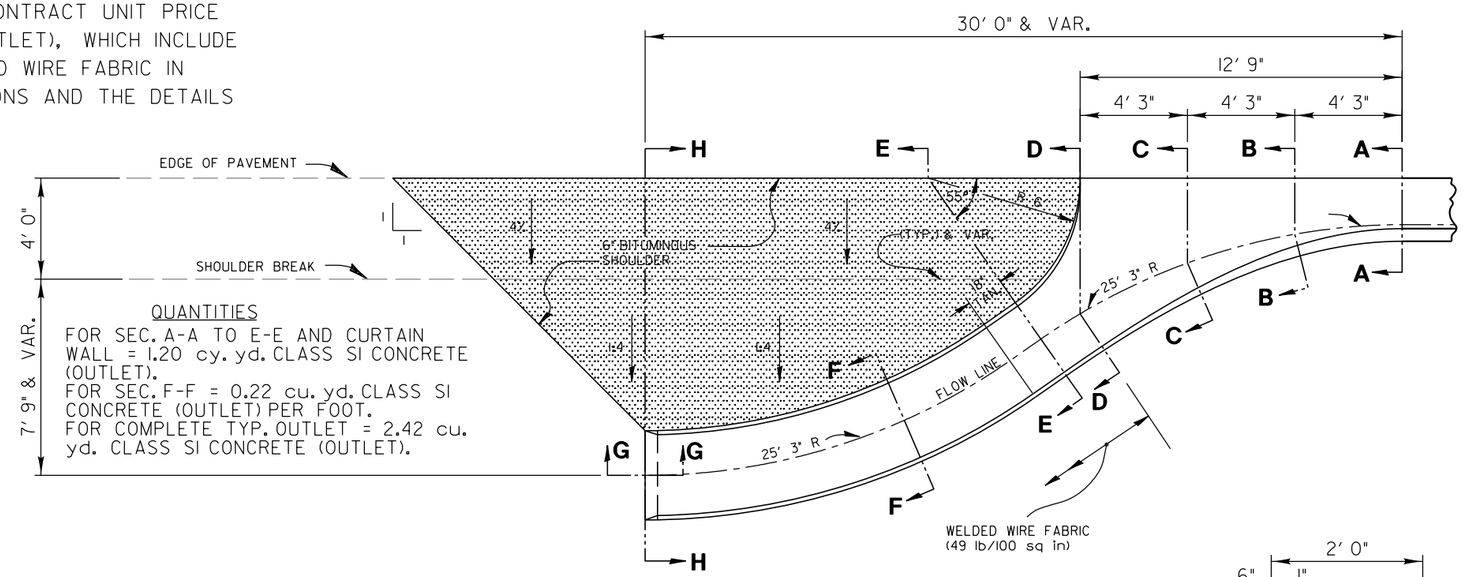

QUANTITIES

FOR SEC. A-A TO E-E AND CURTAIN WALL = 1.20 cy. yd. CLASS SI CONCRETE (OUTLET).
FOR SEC. F-F = 0.22 cu. yd. CLASS SI CONCRETE (OUTLET) PER FOOT.
FOR COMPLETE TYP. OUTLET = 2.42 cu. yd. CLASS SI CONCRETE (OUTLET).

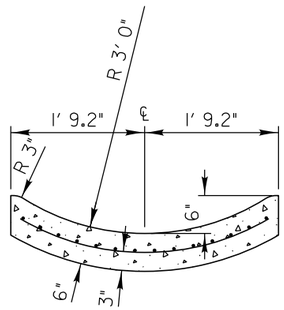

SECTION F-F

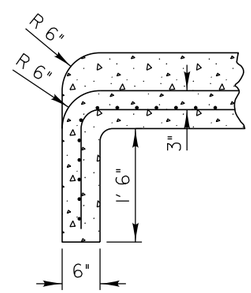

SECTION G-G

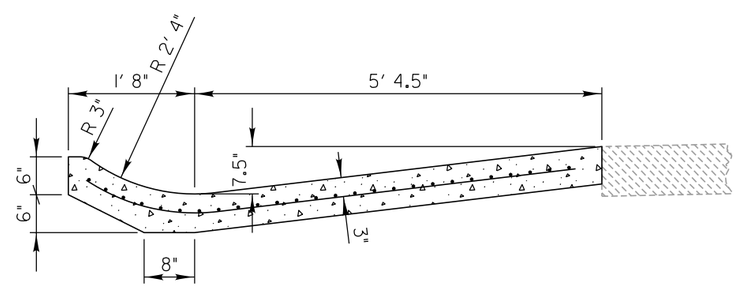

SECTION D-D

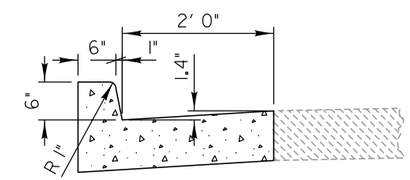

SECTION A-A

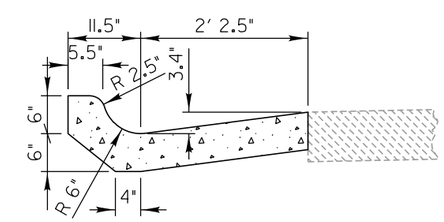

SECTION B-B

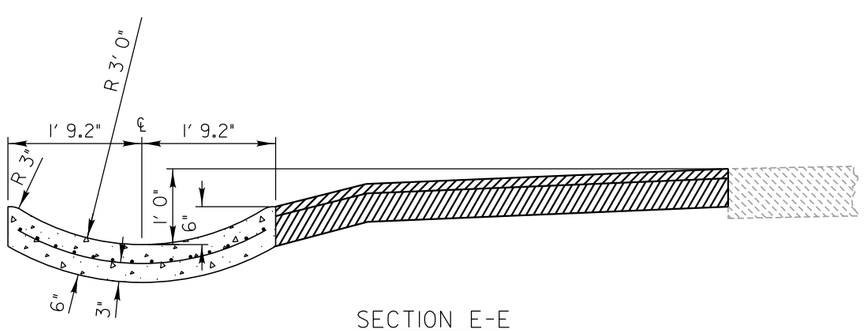

SECTION E-E

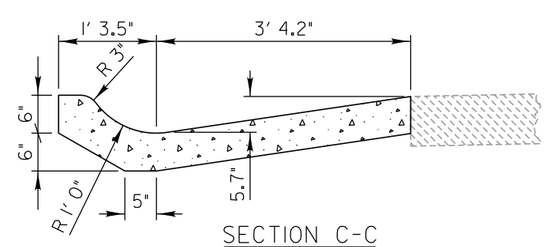

SECTION C-C

REVISIONS / REMARKS					
NO.	DESCRIPTION	DATE	BY	SURVEYOR:	/
		/ /		DSGNR/LIAISON:	KDN
		/ /		PLOTTED BY:	hd17512 2/18/2016

6" VERT 0 — SCALES HORIZ. 0 1 2

ELA ROAD RESURFACING

LakeCounty Division of Transportation

OUTLET FOR CONCRETE CURB AND GUTTER TYPE B-6.24

ROUTE	SECTION	SECTION NUMBER	SHEET	SHEETS
CH60	144	15-00144-21-RS	49	150

FILE NAME: U:\Design\Nauman\15-00144-21-RS Ela Rd Resurfacing\Plans\15-00144-21-RS.dgn

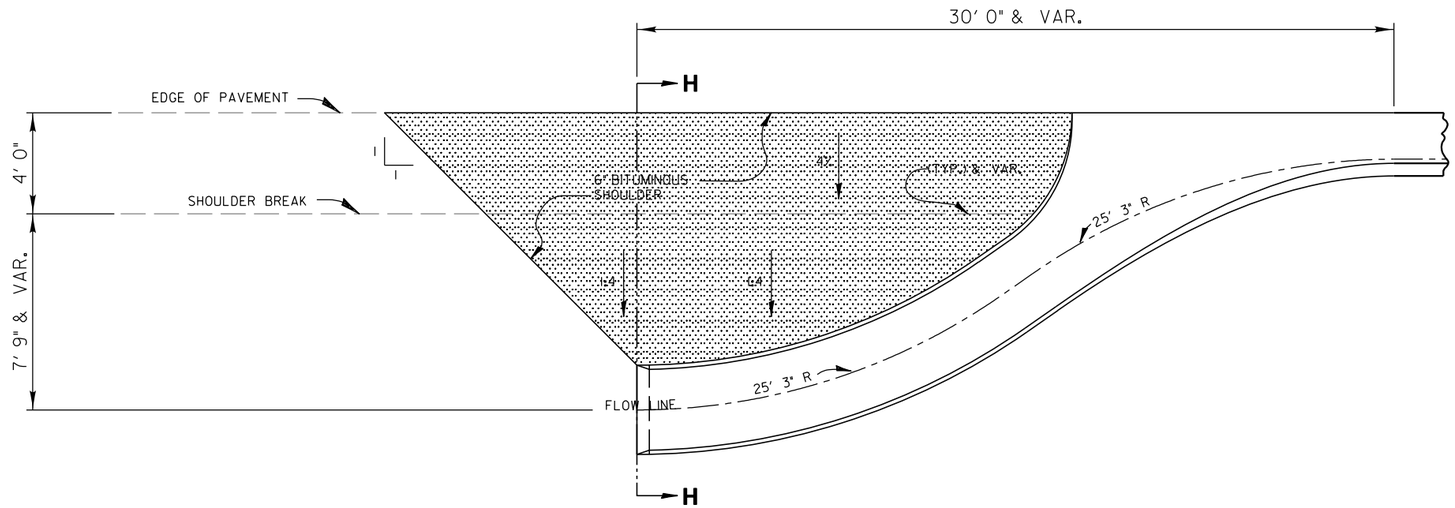

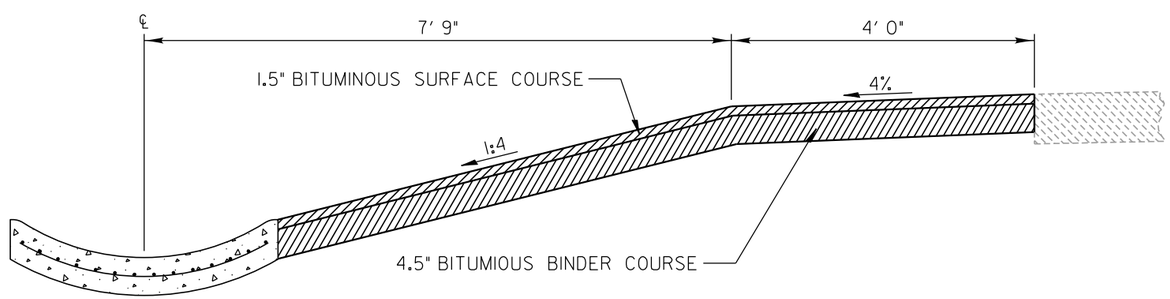

SECTION H-H

REVISIONS / REMARKS					
NO.	DESCRIPTION	DATE	BY	SURVEYOR:	/
		/ /		DSGNR/LIAISON:	KDN
		/ /		PLOTTED BY:	hdl7512 2/18/2016

6" VERT 0 — SCALES HORIZ. 0 1 2

ELA ROAD RESURFACING

LakeCounty Division of Transportation

OUTLET FOR CONCRETE CURB AND GUTTER TYPE B-6.24

ROUTE	SECTION	SECTION NUMBER	SHEET	SHEETS
CH60	144	15-00144-21-RS	50	150

FILE NAME: U:\Design\Nauman\15-00144-21-RS Ela Rd Resurfacing\Plans\15-00144-21-RS.dgn

CABLE SCHEMATIC

CONSTRUCTION NOTES

(1) REINSTALL WIRELESS DETECTOR UNIT IN THE CENTER OF THE LANE ACCORDING TO THE PROJECT SPECIFICATIONS.

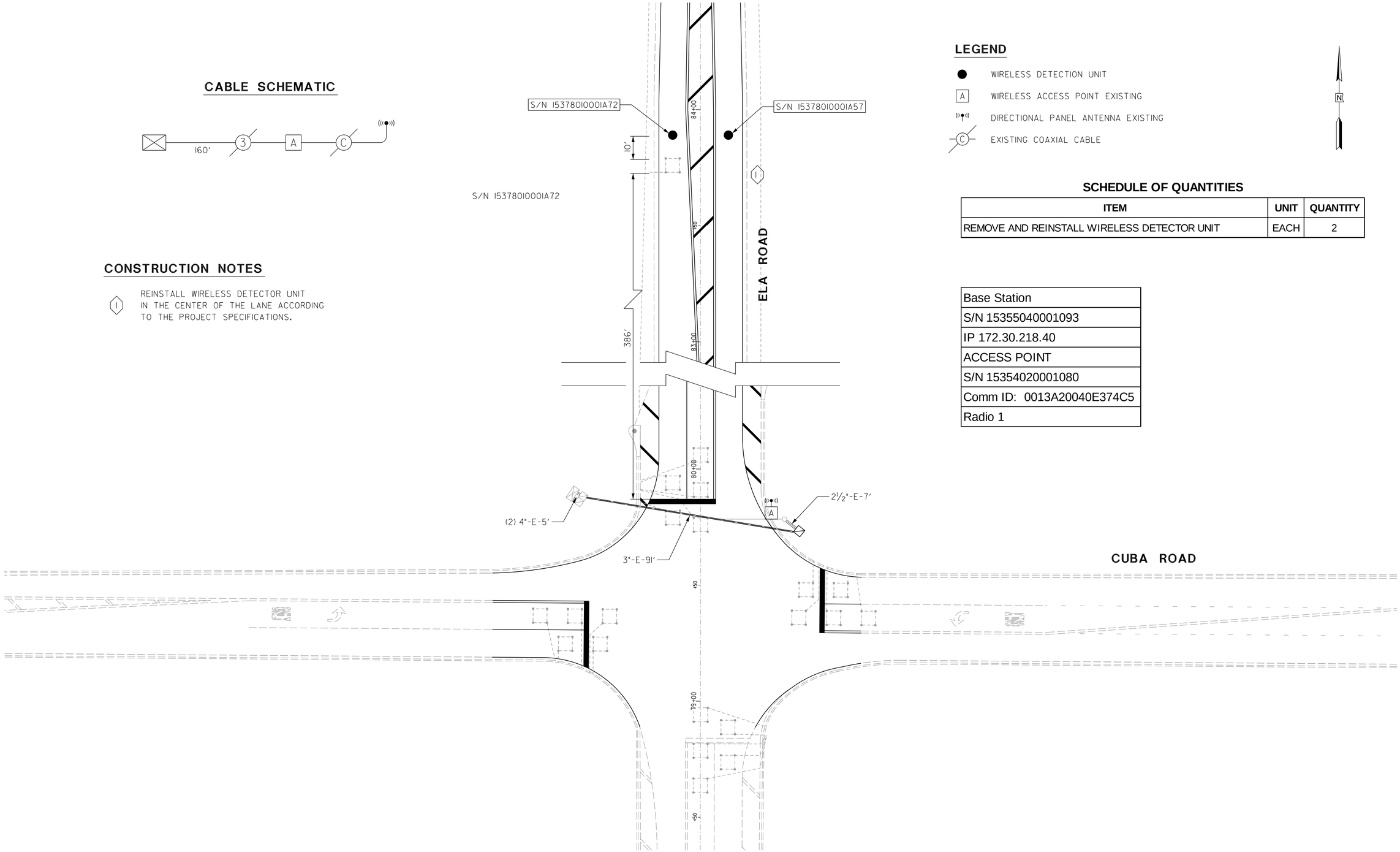

LEGEND

- ● WIRELESS DETECTION UNIT
- (A) WIRELESS ACCESS POINT EXISTING
- DIRECTIONAL PANEL ANTENNA EXISTING
- (C) EXISTING COAXIAL CABLE

N

SCHEDULE OF QUANTITIES

ITEM	UNIT	QUANTITY
REMOVE AND REINSTALL WIRELESS DETECTOR UNIT	EACH	2

Base Station
S/N 15355040001093
IP 172.30.218.40
ACCESS POINT
S/N 15354020001080
Comm ID: 0013A20040E374C5
Radio 1

REVISIONS / REMARKS					
NO.	DESCRIPTION	DATE	BY	SURVEYOR:	___/___
		__/__/__		DSGNR/LIAISON:	___
		__/__/__		PLOTTED BY:	hdrmc 2/18/2016

SCALE HORIZ. 0 20 40

ELA ROAD RESURFACING

LakeCounty Division of Transportation

ELA ROAD RESURFACING
PASSAGE NETWORK TRAFFIC COUNTERS

ROUTE	SECTION	SECTION NUMBER	SHEET	SHEETS
CH60	144	15-00144-21-RS	51	150

FILE NAME: U:\Design\Sullivan\Ela Rd Sidewalk\Traffic Counters.dgn

FOR INFORMATION ONLY

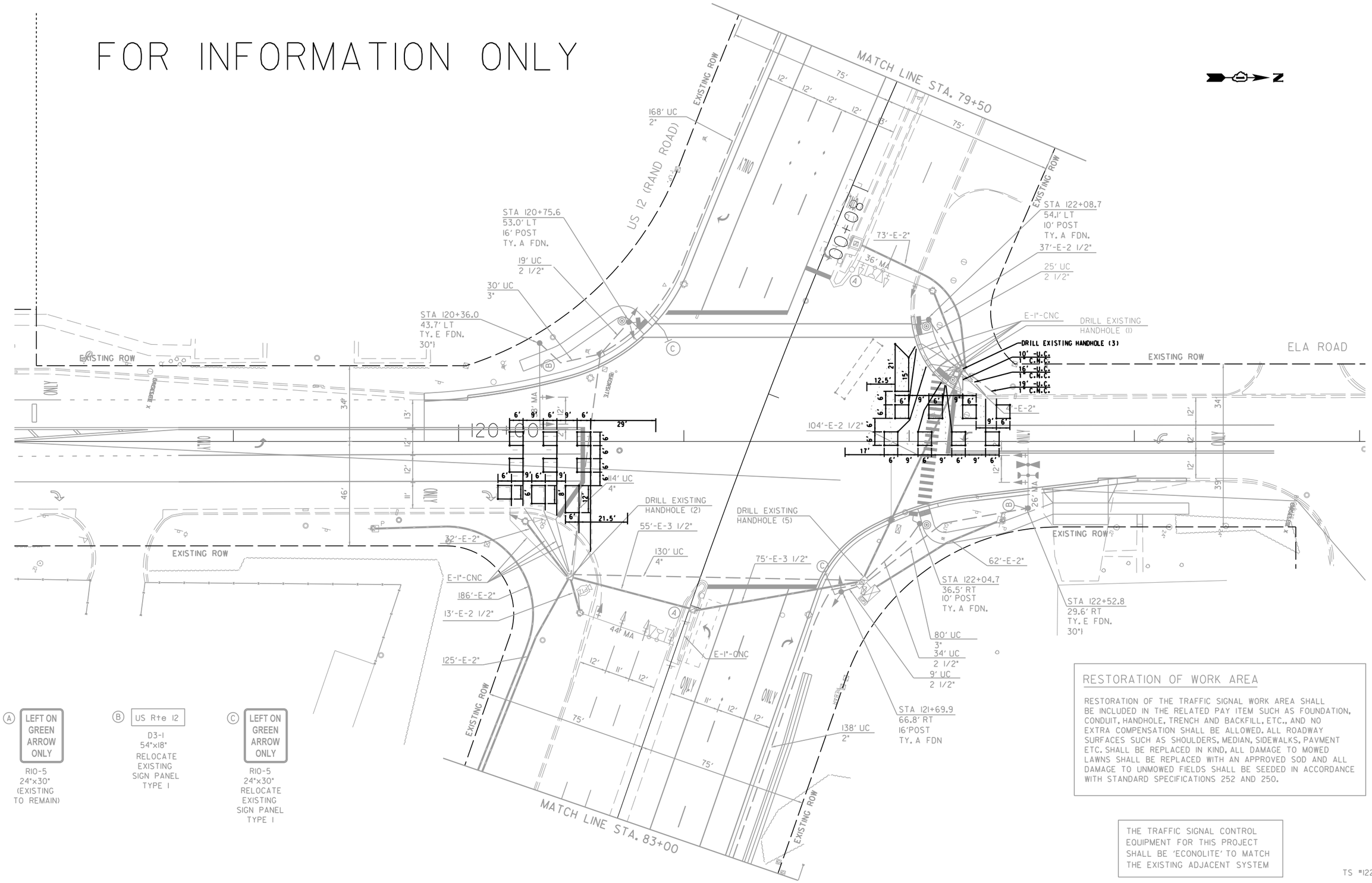

RESTORATION OF WORK AREA

RESTORATION OF THE TRAFFIC SIGNAL WORK AREA SHALL BE INCLUDED IN THE RELATED PAY ITEM SUCH AS FOUNDATION, CONDUIT, HANDHOLE, TRENCH AND BACKFILL, ETC., AND NO EXTRA COMPENSATION SHALL BE ALLOWED. ALL ROADWAY SURFACES SUCH AS SHOULDERS, MEDIAN, SIDEWALKS, PAVMENT ETC. SHALL BE REPLACED IN KIND, ALL DAMAGE TO MOWED LAWNS SHALL BE REPLACED WITH AN APPROVED SOD AND ALL DAMAGE TO UNMOWED FIELDS SHALL BE SEEDED IN ACCORDANCE WITH STANDARD SPECIFICATIONS 252 AND 250.

THE TRAFFIC SIGNAL CONTROL EQUIPMENT FOR THIS PROJECT SHALL BE 'ECONOLITE' TO MATCH THE EXISTING ADJACENT SYSTEM

TS #12295

U:\Design\Sullivan\Ela Rd Sidewalk\Federal Intersection Project\Final Plans\Sheet\D161A94-sht-TS03.dgn
$DATE$ $TIME$

GRAEF 850 W. Higgins Road, Suite 280 Chicago, Illinois 60631 (773) 399-0112

USER NAME = $USER$	DESIGNED - RS	REVISED - GRAEF 9/16/2015	
	DRAWN - FD	REVISED - LCDOT 9/17/2015	
PLOT SCALE = $SCALE$	CHECKED - TS	REVISED -	
PLOT DATE = $DATE$	DATE - 12/17/2014	REVISED -	

STATE OF ILLINOIS
DEPARTMENT OF TRANSPORTATION

US 12 (RAND ROAD) AT ELA ROAD
TRAFFIC SIGNAL PLANS

1"=20' | SHEET 1 OF 3 SHEETS | STA. TO STA.

F.A.P RTE.	SECTION	COUNTY	TOTAL SHEETS	SHEET NO.
334	02-00063-00-CH	LAKE	86	39

CONTRACT NO. 61A94
ILLINOIS FED. AID PROJECT CMF-0334(014)

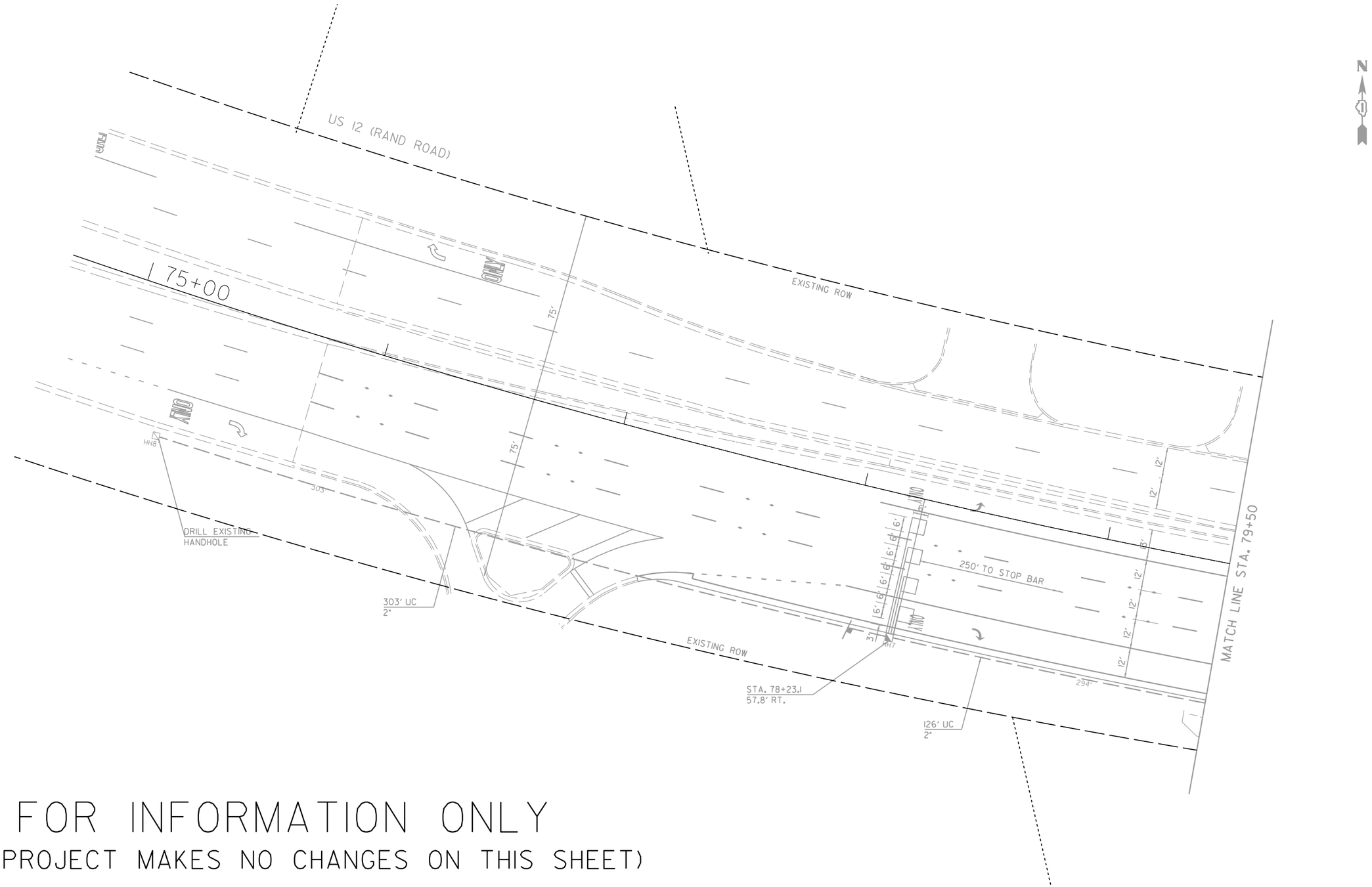

FOR INFORMATION ONLY

(THIS PROJECT MAKES NO CHANGES ON THIS SHEET)

TS #12295

U:\Design\Sullivan\Ela Rd Sidewalk\Federal Intersection Project\Final Plans\Sheet\D161A94-sht-TS04.dgn
$TIME$
$DATE$

GRAEF 850 W. Higgins Road, Suite 280 Chicago, Illinois 60631 (773) 399-082

USER NAME = $USER$	DESIGNED - RS	REVISED -	
	DRAWN - ED	REVISED -	
PLOT SCALE = $SCALE$	CHECKED - TS	REVISED -	
PLOT DATE = $DATE$	DATE - 12/17/2014	REVISED -	

STATE OF ILLINOIS
DEPARTMENT OF TRANSPORTATION

US 12 (RAND ROAD) AT ELA ROAD
TRAFFIC SIGNAL PLANS

1"=20' | SHEET 2 OF 3 SHEETS | STA. | TO STA.

F.A.P. RTE.	SECTION	COUNTY	TOTAL SHEETS	SHEET NO.
334	02-00063-00-CH	LAKE	86	40

CONTRACT NO. 61A94

ILLINOIS | FED. AID PROJECT CMF-0334(014)

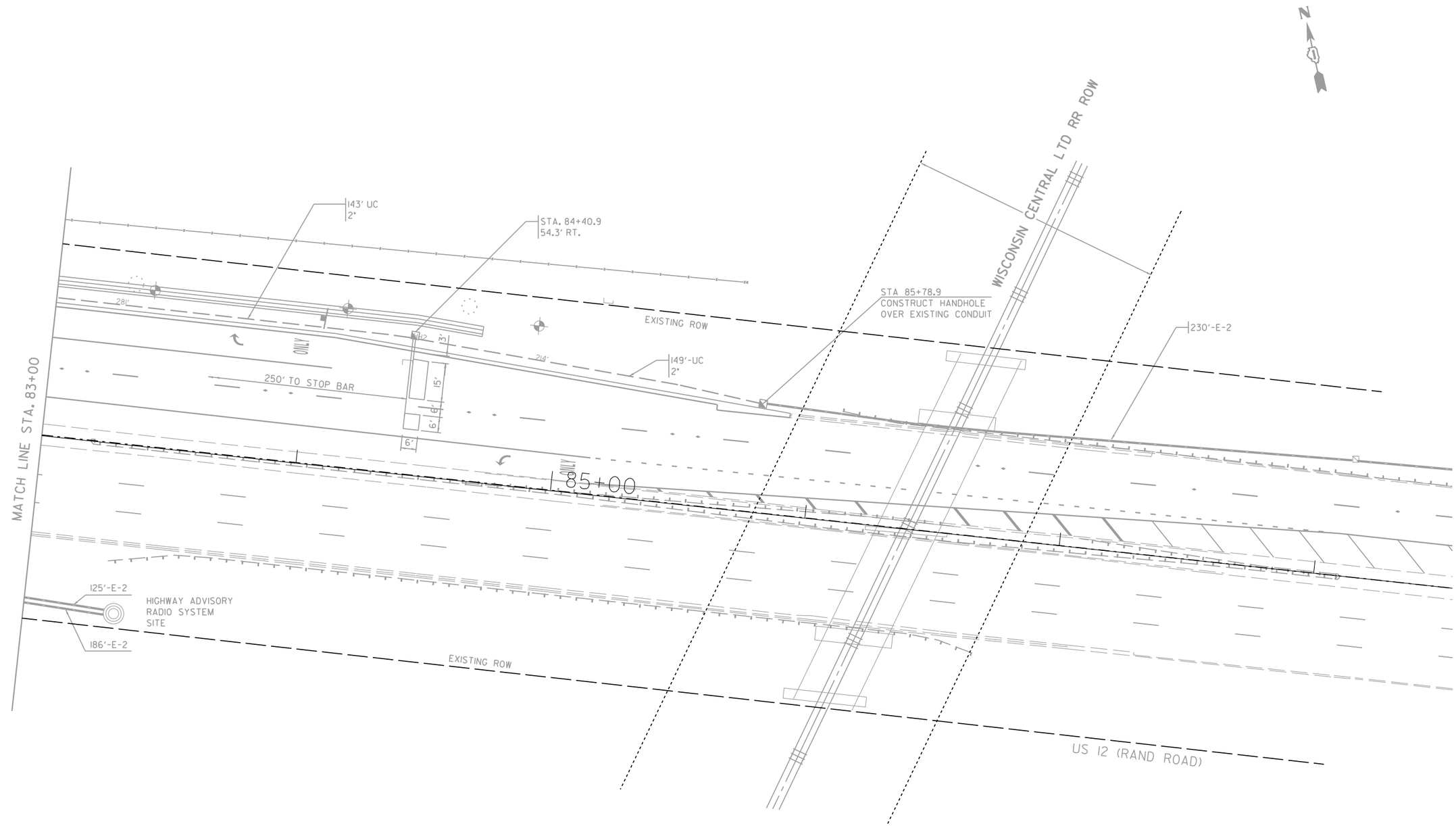

FOR INFORMATION ONLY

(THIS PROJECT MAKES NO CHANGES ON THIS SHEET)

TS #12295

U:\Design\Sullivan\Ela Rd Sidewalk\Federal Intersection Project\Final Plans\Sheet\D161A94-sht-TS05.dgn
$TIME$
$DATE$

GRAEF 8501 W. Higgins Road, Suite 280 Chicago, Illinois 60631 (773) 399-002

USER NAME = $USER$	DESIGNED - RS	REVISED -	
	DRAWN - FD	REVISED -	
PLOT SCALE = $SCALE$	CHECKED - TS	REVISED -	
PLOT DATE = $DATE$	DATE - 12/17/2014	REVISED -	

STATE OF ILLINOIS
DEPARTMENT OF TRANSPORTATION

US 12 (RAND ROAD) AT ELA ROAD
TRAFFIC SIGNAL PLANS

1"=20' | SHEET 3 OF 3 SHEETS | STA. | TO STA.

F.A.P RTE.	SECTION	COUNTY	TOTAL SHEETS	SHEET NO.
334	02-00063-00-CH	LAKE	86	41

CONTRACT NO. 61A94

ILLINOIS | FED. AID PROJECT CMF-0334(014)

FOR INFORMATION ONLY

EXISTING CONTROLLER SEQUENCE

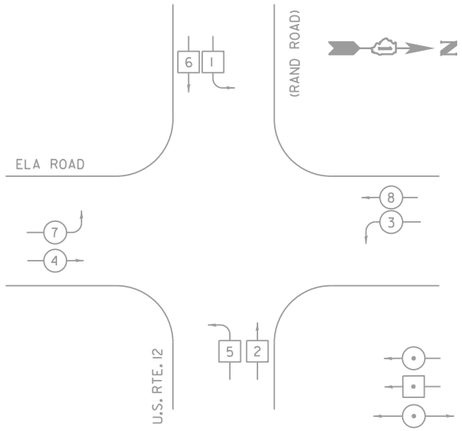

PROPOSED CONTROLLER SEQUENCE

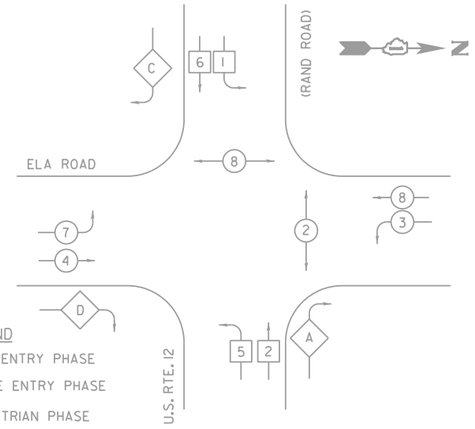

LEGEND

- DUAL ENTRY PHASE
- SINGLE ENTRY PHASE
- PEDESTRIAN PHASE
- NUMBER REFERS TO ASSOCIATED PHASE
- OL DUAL ENTRY PHASE

PHASE DESIGNATION DIAGRAM

PHASE DESIGNATION DIAGRAM

OVERLAP LETTER		PERMISSIVE PHASE		PROTECTIVE PHASE
A	=	2	+	3
C	=	6	+	7
D	=	4	+	5

EMERGENCY VEHICLE PREEMPTION SEQUENCE

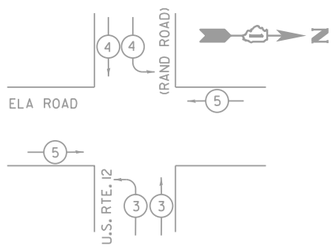

PROPOSED EMERGENCY VEHICLE PREEMPTORS			
EMERGENCY VEHICLE PREEMPTOR	3	4	5
MOVEMENT			

I.D.O.T. TRAFFIC SIGNAL INSTALLATION ELECTRICAL SERVICE REQUIREMENTS					TOTAL WATTAGE
TYPE	NO. LAMPS	WATTAGE	LED	% OPERATION	
SIGNAL (RED)	15		17	0.50	127.5
(YELLOW)	15		25	0.25	93.75
(GREEN)	15		15	0.25	56.25
ARROW	32		12	0.15	57.6
PED. SIGNAL	4		25	1.00	100
CONTROLLER	1		100	1.00	100
ILLUM. SIGN				0.05	
VIDEO SYSTEM					
FLASHER			25		
				TOTAL =	435.1

ENERGY COST TO: Illinois Department of Transportation
Division of Highways / District 1
201 W. CENTER COURT, SCHAUMBURG, IL 60196

ENERGY SUPPLY: CONTACT: DOTTIE PROSEN
PHONE: (847) 816-5323
COMPANY: ComEd - ACCOUNT NO. 10-004901

SCHEDULE OF TRAFFIC SIGNAL QUANTITIES

ITEM	UNIT	QUANTITY
RELOCATE SIGN PANEL - TYPE 1	SQ FT	24
UNDERGROUND CONDUIT, GALVANIZED STEEL, 2" DIA.	FOOT	575
UNDERGROUND CONDUIT, GALVANIZED STEEL, 2 1/2" DIA.	FOOT	98
UNDERGROUND CONDUIT, GALVANIZED STEEL, 3" DIA.	FOOT	110
UNDERGROUND CONDUIT, GALVANIZED STEEL, 4" DIA.	FOOT	230
HANDHOLE	EACH	3
GROUNDING EXISTING HANDHOLE FRAME AND COVER	EACH	4
ELECTRIC CABLE IN CONDUIT, SIGNAL NO. 14 2C	FOOT	703
ELECTRIC CABLE IN CONDUIT, SIGNAL NO. 14 3C	FOOT	875
ELECTRIC CABLE IN CONDUIT, SIGNAL NO. 14 5C	FOOT	348
ELECTRIC CABLE IN CONDUIT, SIGNAL NO. 14 7C	FOOT	2,029
ELECTRIC CABLE IN CONDUIT, LEAD-IN, NO. 14 1 PAIR	FOOT	882
ELECTRIC CABLE IN CONDUIT, EQUIP GRD COND, NO. 6 IC	FOOT	1,019
TRAFFIC SIGNAL POST, GALVANIZED STEEL 10 FT.	EACH	2
TRAFFIC SIGNAL POST, GALVANIZED STEEL 16 FT.	EACH	2
STEEL MAST ARM ASSEMBLY AND POLE, 26 FT.	EACH	1
STEEL MAST ARM ASSEMBLY AND POLE, 38 FT.	EACH	1
CONCRETE FOUNDATION, TYPE A	FOOT	16
CONCRETE FOUNDATION, TYPE E 30-INCH DIAMETER	FOOT	24
DRILL EXISTING HANDHOLE	EACH	9
SIGNAL HEAD, LED, 1-FACE, 3-SECTION, MAST-ARM MOUNTED	EACH	1
SIGNAL HEAD, LED, 1-FACE, 5-SECTION, BRACKET MOUNTED	EACH	1
SIGNAL HEAD, LED, 1-FACE, 5-SECTION, MAST-ARM MOUNTED	EACH	5
SIGNAL HEAD, LED, 2-FACE, 1-3 SECTION, 1-5 SECTION, BRACKET MOUNTED	EACH	2
PEDESTRIAN SIG HD, LED, 1-FACE, BRKT MTD WITH COUNTDOWN TIMER	EACH	4
TRAFFIC SIGNAL BACKPLATE, LOUVERED, ALUMINUM	EACH	6
DETECTOR LOOP, TYPE 1	FOOT	264
PEDESTRIAN PUSH-BUTTON	EACH	4
TEMPORARY TRAFFIC SIGNAL INSTALLATION	EACH	1
REMOVE EXISTING TRAFFIC SIGNAL EQUIPMENT	EACH	1
REMOVE EXISTING HANDHOLE	EACH	4
REMOVE EXISTING CONCRETE FOUNDATION	EACH	4
ELECTRIC CABLE IN CONDUIT, SIGNAL, NO. 20 3/C, TW, SH	FOOT	153
RELOCATE LIGHT DETECTOR	EACH	1
TEMPORARY TRAFFIC SIGNAL TIMING	EACH	1

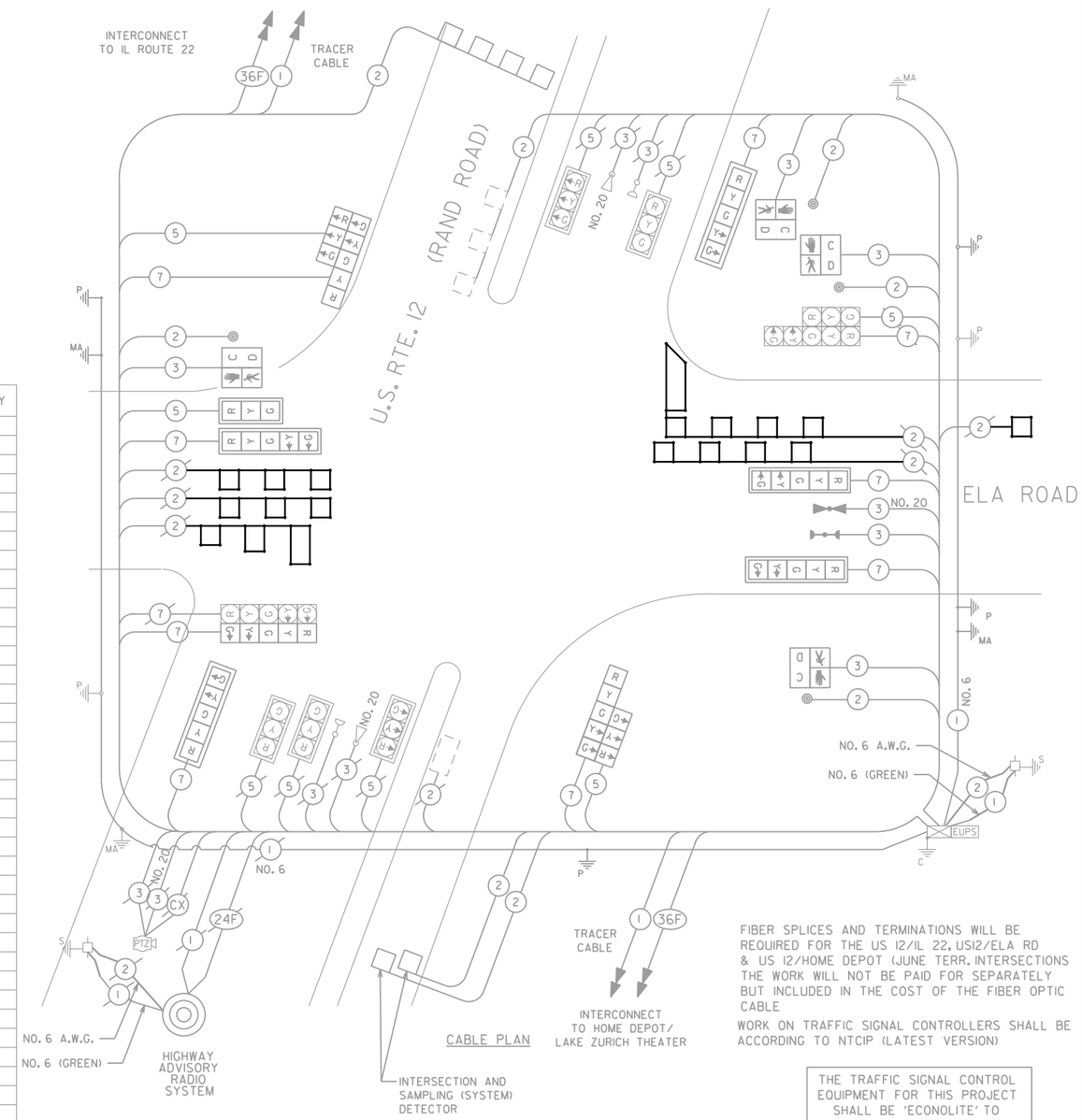

CABLE PLAN

FIBER SPLICES AND TERMINATIONS WILL BE REQUIRED FOR THE US 12/IL 22, US12/ELA RD & US 12/HOME DEPOT (JUNE TERR. INTERSECTIONS THE WORK WILL NOT BE PAID FOR SEPARATELY BUT INCLUDED IN THE COST OF THE FIBER OPTIC CABLE

WORK ON TRAFFIC SIGNAL CONTROLLERS SHALL BE ACCORDING TO NTCIP (LATEST VERSION)

THE TRAFFIC SIGNAL CONTROL EQUIPMENT FOR THIS PROJECT SHALL BE 'ECONOLITE' TO MATCH EXISTING EQUIPMENT

CX - COAXIAL CABLE 75 OHM WITH 20 AWG SOLID COPPER CONNECTOR

TS #12295

U:\Design\Sullivan\Ela Rd Sidewalk\Federal Intersection Project\Final Plans\Sheet\D161A94-sht-TS06.dgn
$TIME$
$DATE$

GRAEF 850 W. Higgins Road, Suite 280 Chicago, Illinois 60631 (773) 399-012

USER NAME = $USER$	DESIGNED - RS	REVISED -
	DRAWN - FD	REVISED -
PLOT SCALE = $SCALE$	CHECKED - TS	REVISED -
PLOT DATE = $DATE$	DATE - 12/17/2014	REVISED -

STATE OF ILLINOIS
DEPARTMENT OF TRANSPORTATION

RAND ROAD (US RTE 12) AT ELA ROAD
SCHEDULE OF QUANTITIES, CABLE PLAN, AND PHASE DESIGNATION DIAGRAM AND EMERGENCY VEHICLE PREEMPTION DIAGRAM

NONE | SHEET 1 OF 1 SHEETS | STA. | TO STA.

F.A.P. RTE.	SECTION	COUNTY	TOTAL SHEETS	SHEET NO.
334	02-00063-00-CH	LAKE	86	42

CONTRACT NO. 61A94

ILLINOIS | FED. AID PROJECT CMF-0334(014)

Note:
Landscape areas (other than grass) within the right-of-way
and on the McDonald's property within the right of entry limits
shall be protected and preserved to the maximum extent possible.

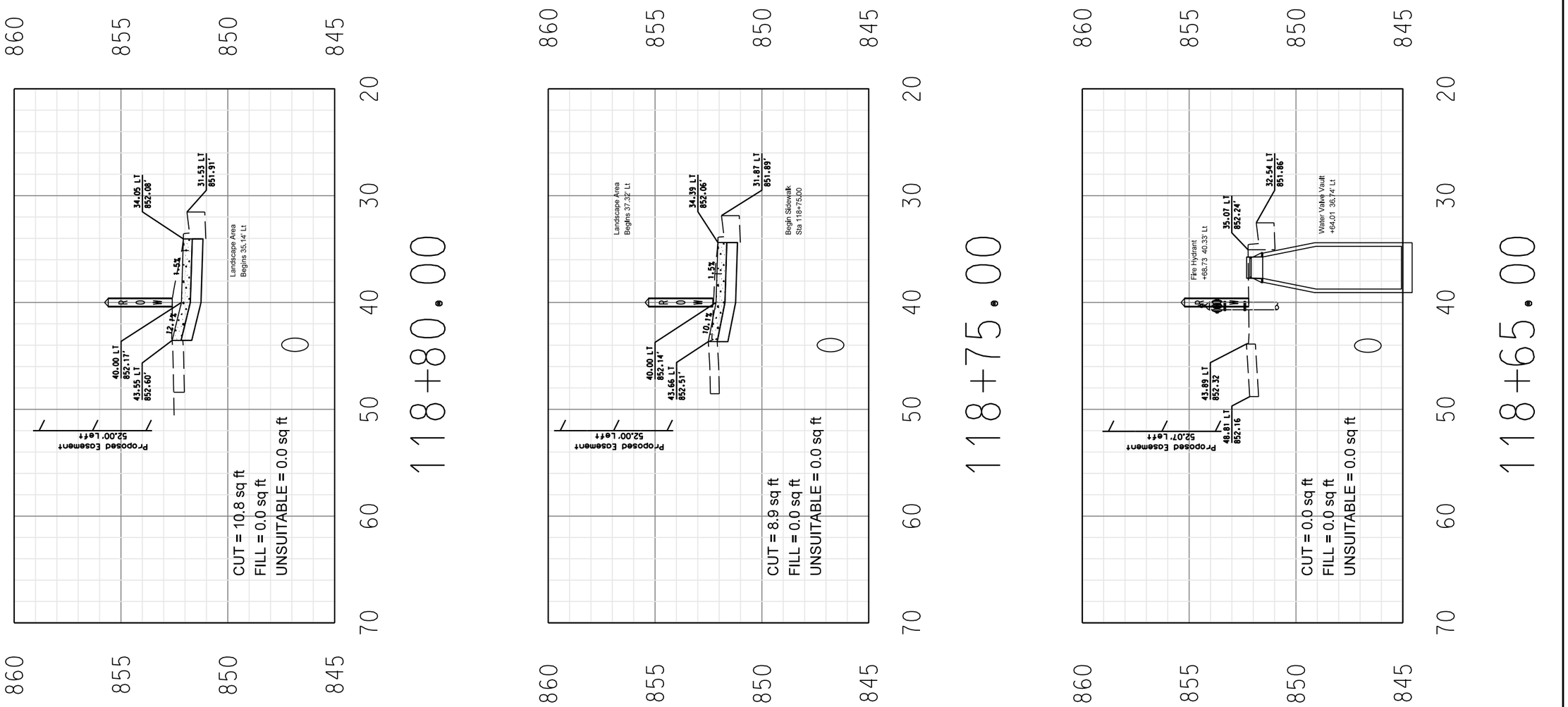

REVISIONS / REMARKS					
NO.	DESCRIPTION	DATE	BY	SURVEYOR:	/
		/ /		DSGNR/LIAISON:	
		/ /		PLOTTED BY:	hdrmc 2/18/2016

LakeCounty
Division of Transportation

ELA ROAD RESURFACING
CROSS SECTIONS STA. 118+65.00 TO STA. 118+80.00

ROUTE	SECTION	SECTION NUMBER	SHEET	SHEETS
CH60	144	15-00144-21-RS	56	150

FILE NAME: U:\Design\Sullivan\Ela Rd Sidewalk\ElaRd Cross Sections.dgn

Note:
Landscape areas (other than grass) within the right-of-way
and on the McDonald's property within the right of entry limits
shall be protected and preserved to the maximum extent possible.

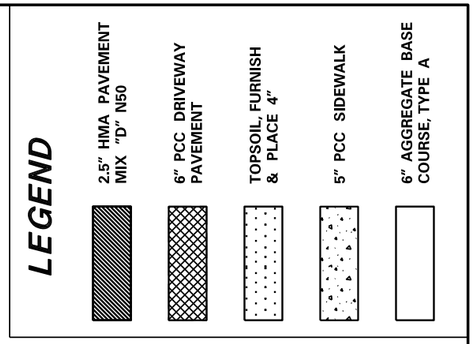

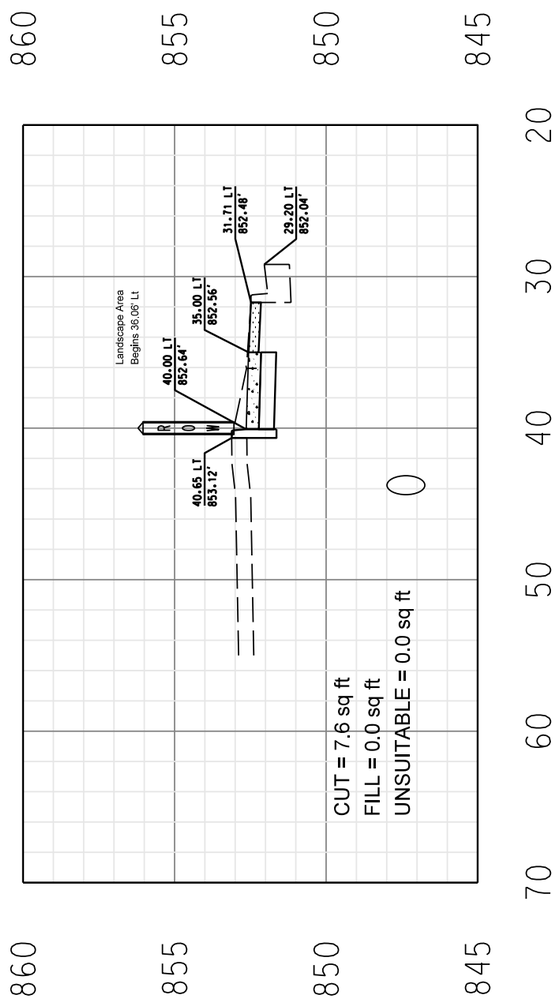

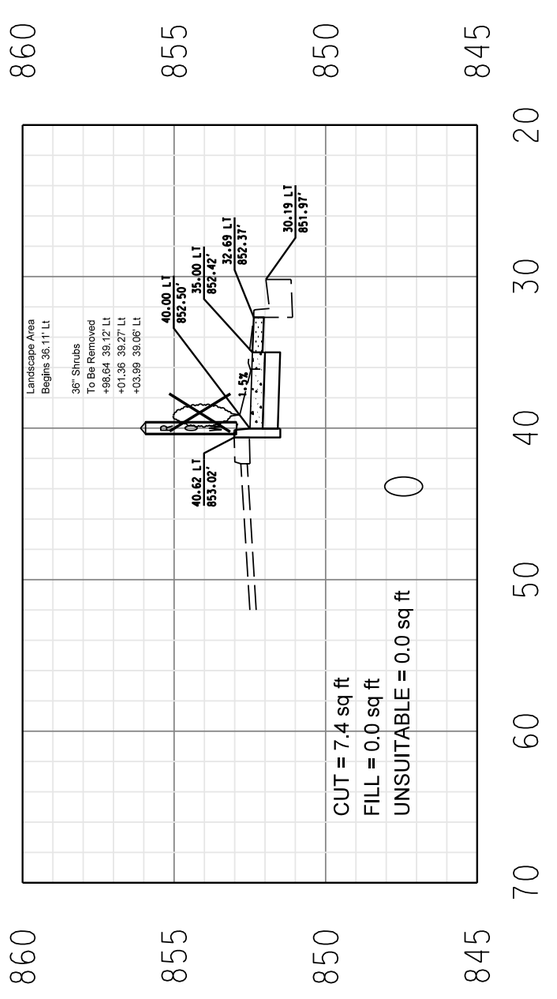

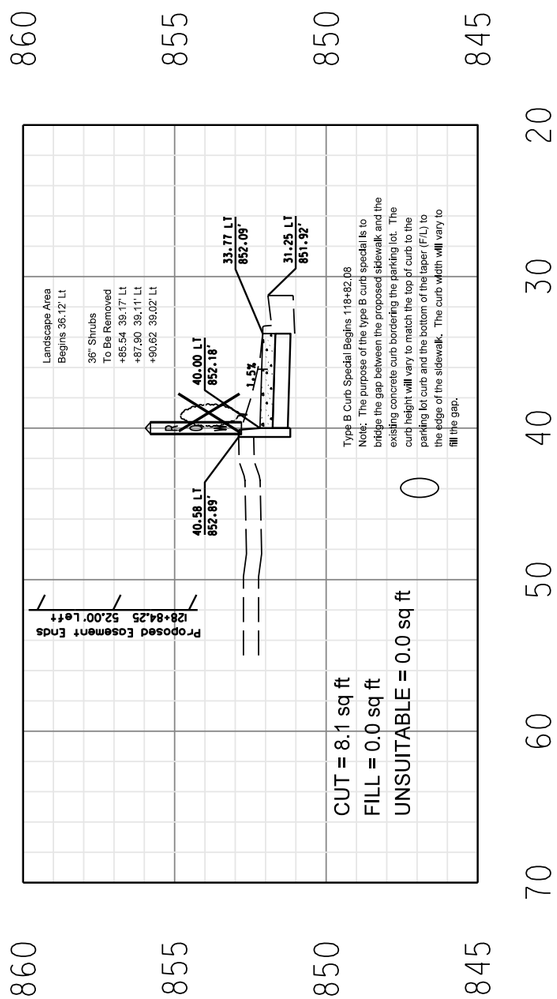

REVISIONS / REMARKS					
NO.	DESCRIPTION	DATE	BY	SURVEYOR:	/
		/ /		DSGNR/LIAISON:	
		/ /		PLOTTED BY:	hdrmc 2/18/2016

LakeCounty
Division of Transportation

ELA ROAD RESURFACING

CROSS SECTIONS STA. 118+84.15 TO STA. 119+14.10

ROUTE	SECTION	SECTION NUMBER	SHEET	SHEETS
CH60	144	15-00144-21-RS	57	150

FILE NAME: U:\Design\Sullivan\Ela Rd Sidewalk\ElaRd Cross Sections.dgn

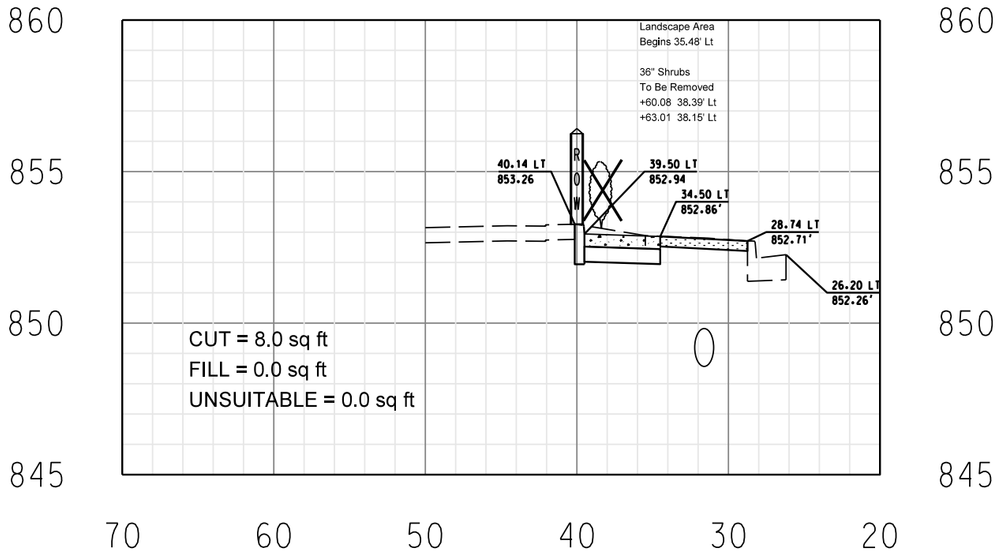

119+56.55

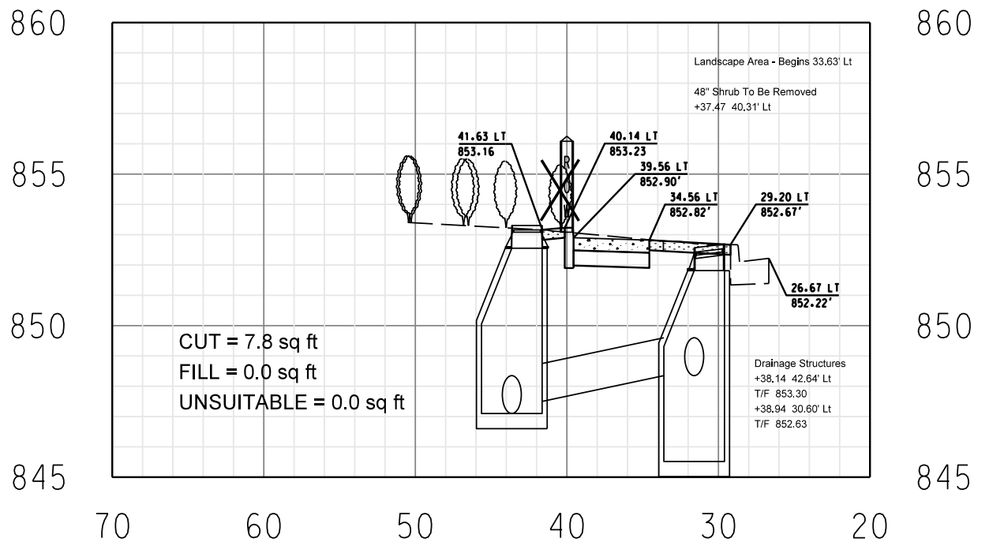

119+50.00

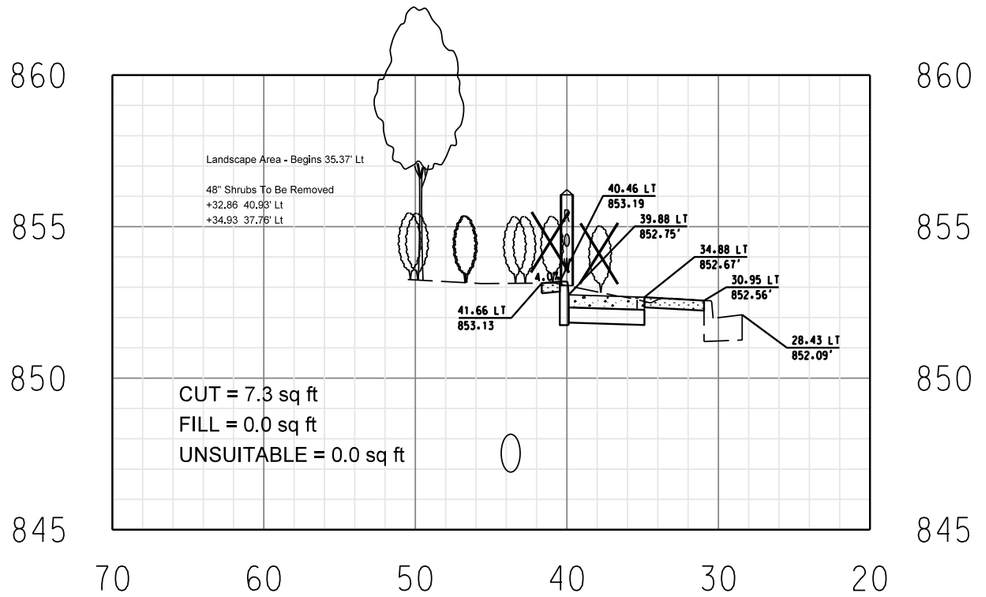

119+25.00

Note:
Landscape areas (other than grass) within the right-of-way and on the McDonald's property within the right of entry limits shall be protected and preserved to the maximum extent possible.

LEGEND

- 2.5" HMA PAVEMENT MIX "D" N50
- 6" PCC DRIVEWAY PAVEMENT
- TOPSOIL, FURNISH & PLACE 4"
- 5" PCC SIDEWALK
- 6" AGGREGATE BASE COURSE, TYPE A

REVISIONS / REMARKS			
NO.	DESCRIPTION	DATE	BY
		/ /	
		/ /	

SURVEYOR:
DSGNR/LIAISON:
PLOTTED BY: hdrmc 2/18/206

LakeCounty
Division of Transportation

ELA ROAD RESURFACING

CROSS SECTIONS STA. 119+25.00 TO STA. 119+56.55

ROUTE	SECTION	SECTION NUMBER	SHEET	SHEETS
CH60	144	15-00144-21-RS	58	150

FILE NAME: U:\Design\Sullivan\Ela Rd Sidewalk\Eland Cross Sections.dgn

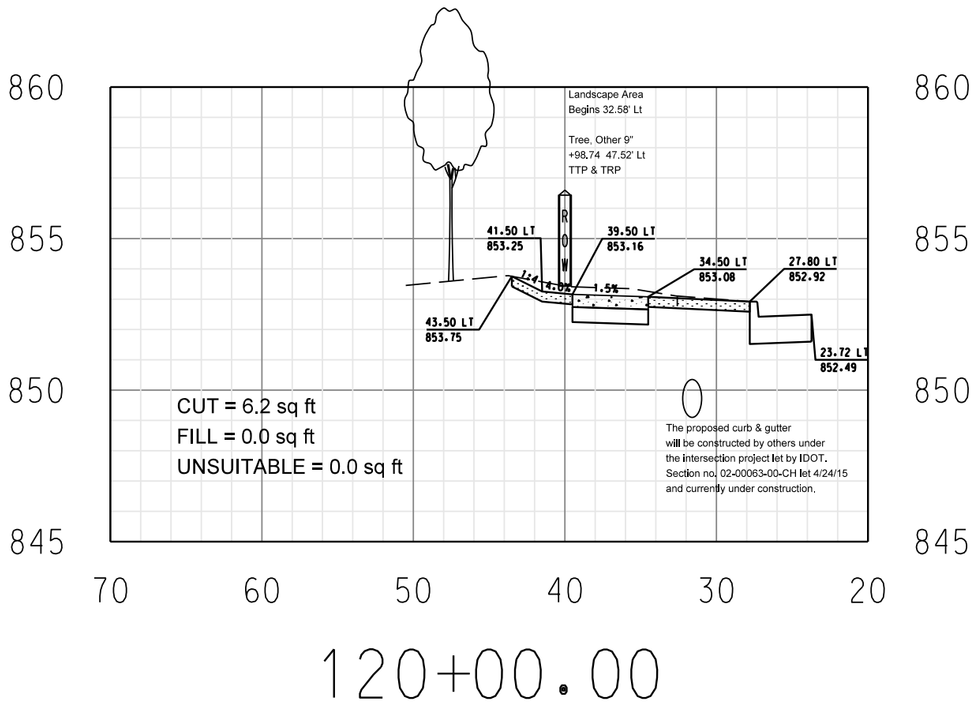

120+00.00

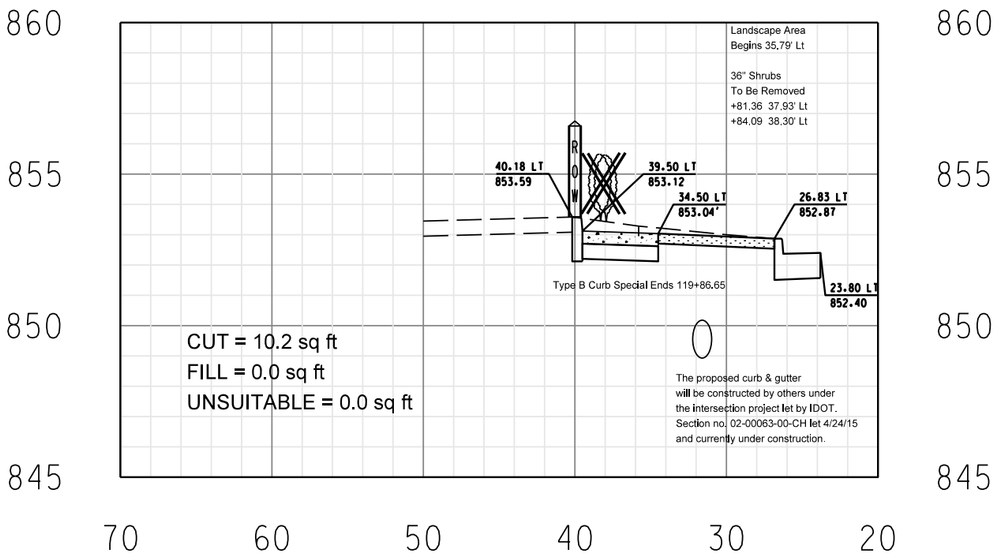

119+86.65

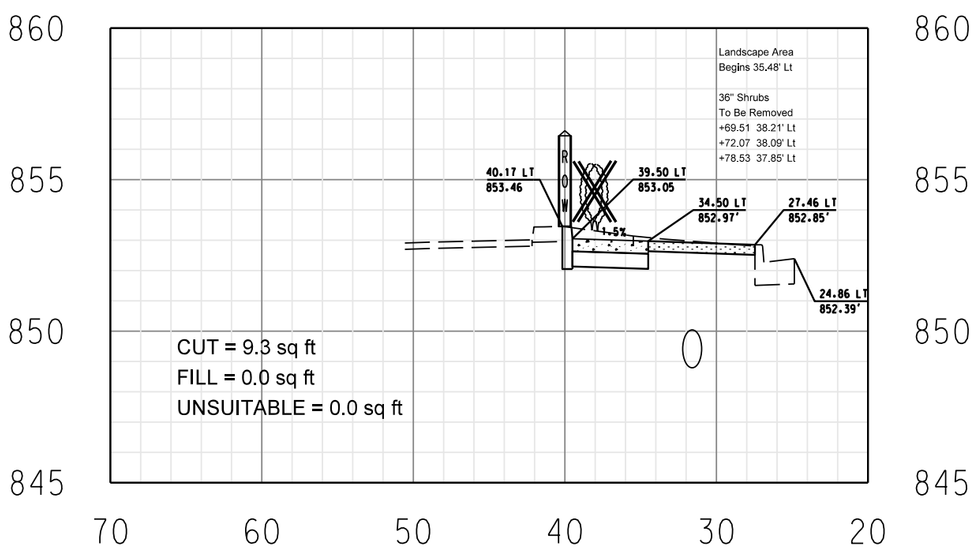

119+75.00

Note:
Landscape areas (other than grass) within the right-of-way and on the McDonald's property within the right of entry limits shall be protected and preserved to the maximum extent possible.

LEGEND

- 2.5" HMA PAVEMENT MIX "D" N50
- 6" PCC DRIVEWAY PAVEMENT
- TOPSOIL, FURNISH & PLACE 4"
- 5" PCC SIDEWALK
- 6" AGGREGATE BASE COURSE, TYPE A

NO.	REVISIONS / REMARKS DESCRIPTION	DATE	BY
		/ /	SURVEYOR:
		/ /	DSGNR/LIAISON:
			PLOTTED BY:
			hdrmc 2/18/206

LakeCounty
Division of Transportation

ELA ROAD RESURFACING

CROSS SECTIONS STA. 119+75.00 TO STA. 120+00.00

ROUTE	SECTION	SECTION NUMBER	SHEET	SHEETS
CH60	144	15-00144-21-RS	59	150

FILE NAME: U:\Design\Sullivan\Elo Rd Sidewalk\EloRd Cross Sections.dgn

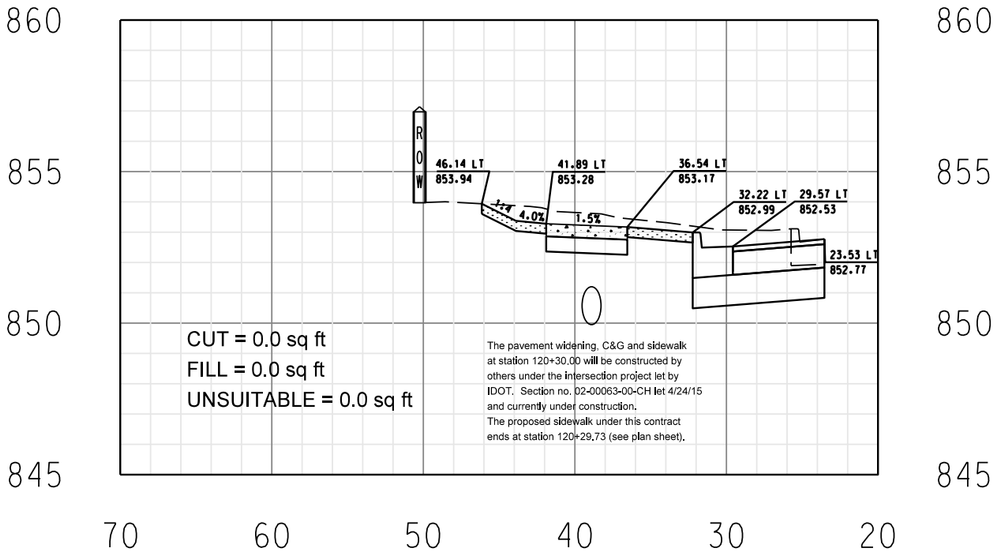

120+30.00

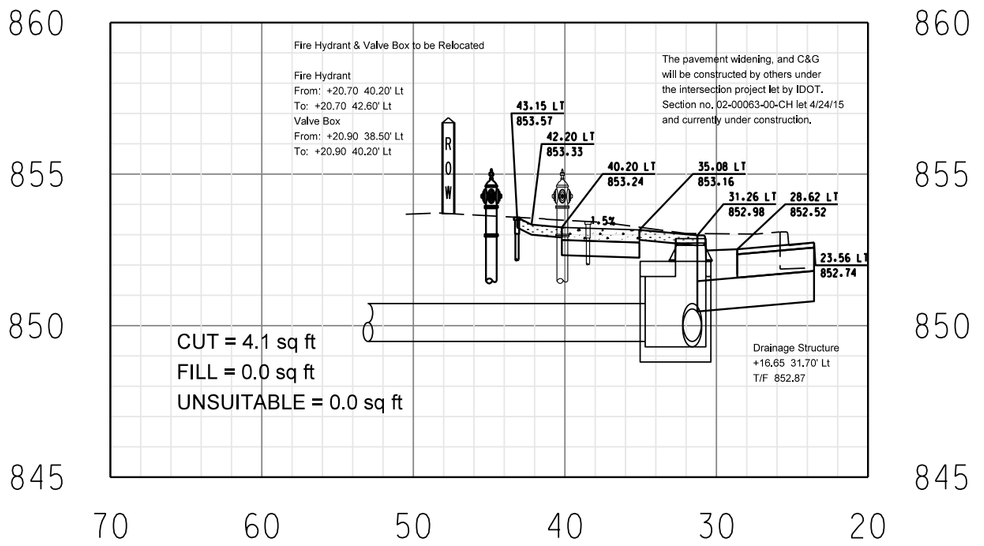

120+25.00

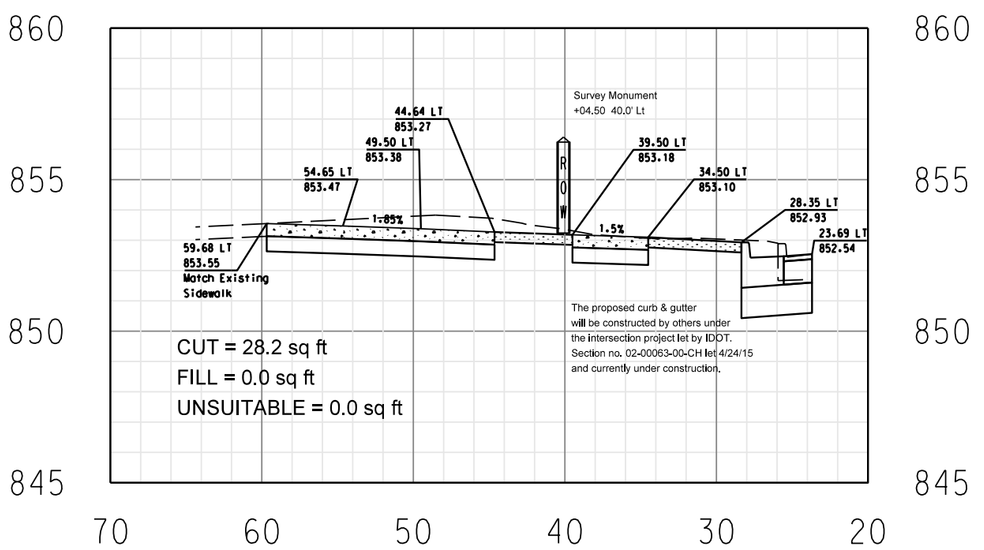

120+05.20

Note:
Landscape areas (other than grass) within the right-of-way and on the McDonald's property within the right of entry limits shall be protected and preserved to the maximum extent possible.

LEGEND

- 2.5" HMA PAVEMENT MIX "D" N50
- 6" PCC DRIVEWAY PAVEMENT
- TOPSOIL, FURNISH & PLACE 4"
- 5" PCC SIDEWALK
- 6" AGGREGATE BASE COURSE, TYPE A

REVISIONS / REMARKS			
NO.	DESCRIPTION	DATE	BY
		/ /	
		/ /	

SURVEYOR:
DSGNR/LIAISON:
PLOTTED BY: hdrmc 2/18/206

LakeCounty
Division of Transportation

ELA ROAD RESURFACING
CROSS SECTIONS STA. 120+05.20 TO STA. 120+30.00

ROUTE	SECTION	SECTION NUMBER	SHEET	SHEETS
CH60	144	15-00144-21-RS	60	150

FILE NAME: U:\Design\Sullivan\Elo Rd Sidewalk\Eldrd Cross Sections.dgn

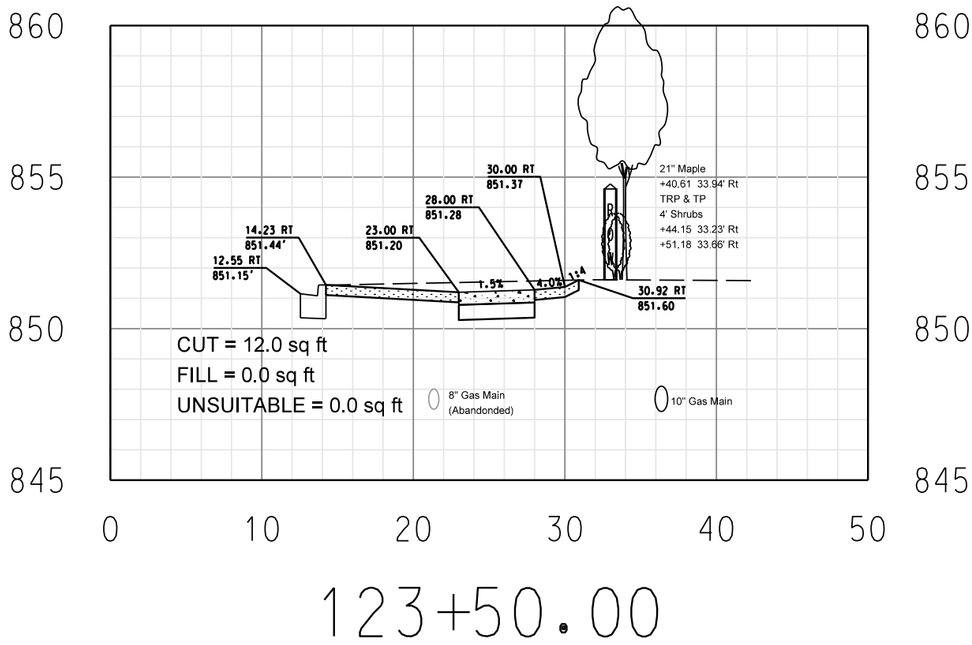

123+50.00

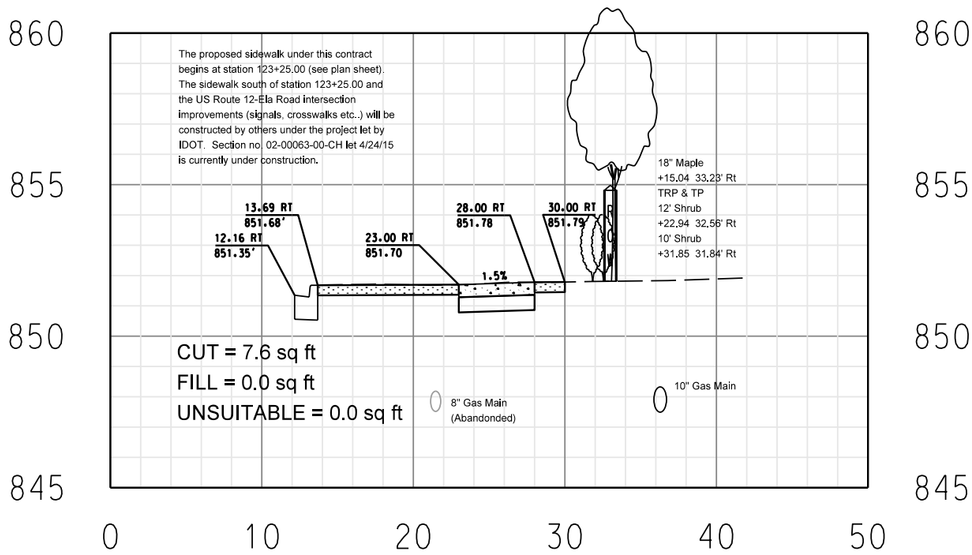

123+25.00

The pavement widening, C&G and sidewalk at station 120+30.00 will be constructed by others under the intersection project let by IDOT. Section no. 02-00063-00-CH let 4/24/15 and currently under construction.
The proposed sidewalk under this contract ends at station 120+29.73 (see plan sheet).

LEGEND

- 2.5" HMA PAVEMENT MIX "D" N50
- 6" PCC DRIVEWAY PAVEMENT
- TOPSOIL, FURNISH & PLACE 4"
- 5" PCC SIDEWALK
- 6" AGGREGATE BASE COURSE, TYPE A

REVISIONS / REMARKS			
NO.	DESCRIPTION	DATE	BY
		/ /	
		/ /	

SURVEYOR:
DSGNR/LIAISON:
PLOTTED BY: hdrmc 2/18/2016

LakeCounty
Division of Transportation

ELA ROAD RESURFACING

CROSS SECTIONS STA. 123+25.00 TO STA. 123+50.00

ROUTE	SECTION	SECTION NUMBER	SHEET	SHEETS
CH60	144	15-00144-21-RS	61	150

FILE NAME: U:\Design\Sullivan\Ela Rd Sidewalk\Ela Rd Cross Sections.dgn

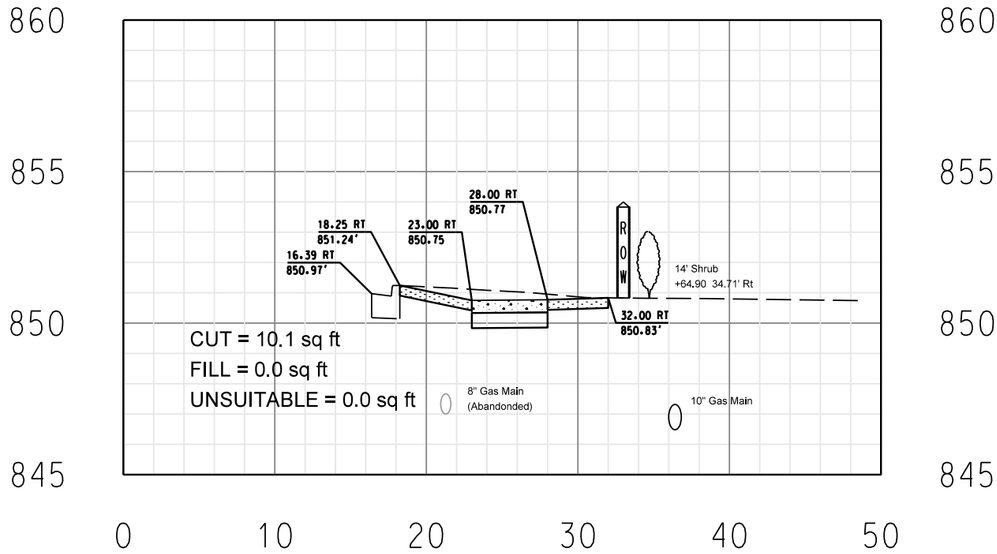

123+65.00

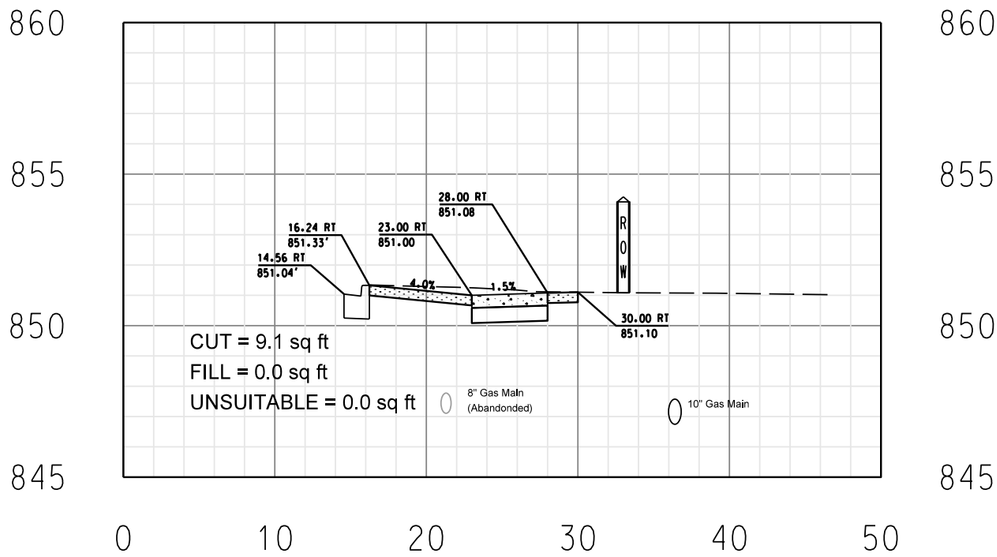

123+60.00

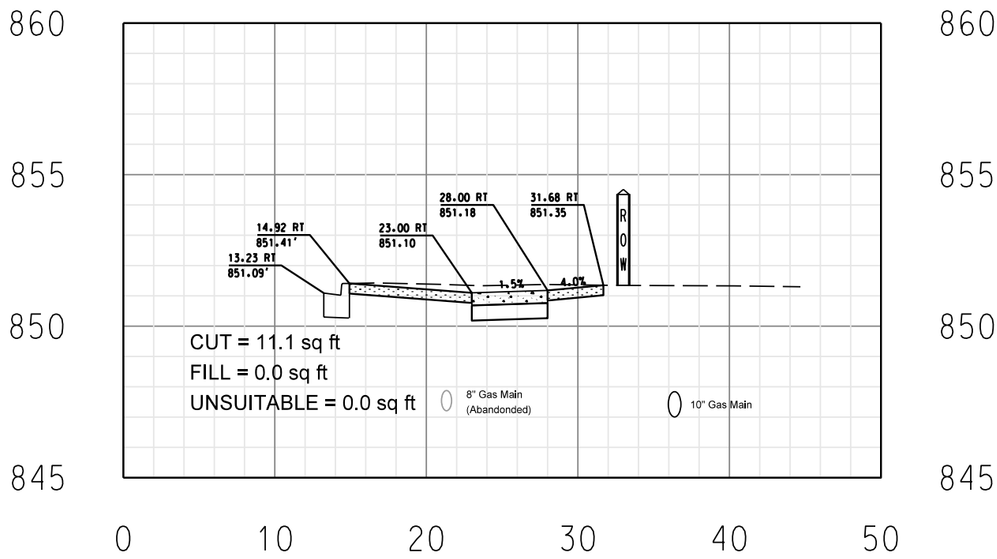

123+55.00

LEGEND

- 2.5" HMA PAVEMENT MIX "D" N50
- 6" PCC DRIVEWAY PAVEMENT
- TOPSOIL, FURNISH & PLACE 4"
- 5" PCC SIDEWALK
- 6" AGGREGATE BASE COURSE, TYPE A

REVISIONS / REMARKS			
NO.	DESCRIPTION	DATE	BY
		/ /	
		/ /	

SURVEYOR:
DSGNR/LIAISON:
PLOTTED BY: hdrmc 2/18/206

LakeCounty
Division of Transportation

ELA ROAD RESURFACING

CROSS SECTIONS STA. 123+55.00 TO STA. 123+65.00

ROUTE	SECTION	SECTION NUMBER	SHEET	SHEETS
CH60	144	15-00144-21-RS	62	150

FILE NAME: U:\Design\Sullivan\Elo Rd Sidewalk\Eloro Cross Sections.dgn

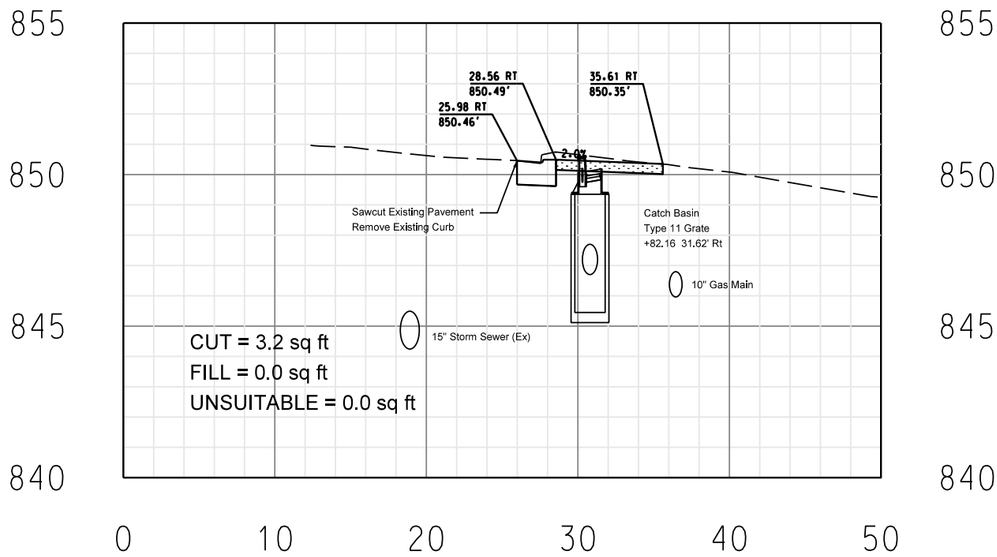

123+80.00

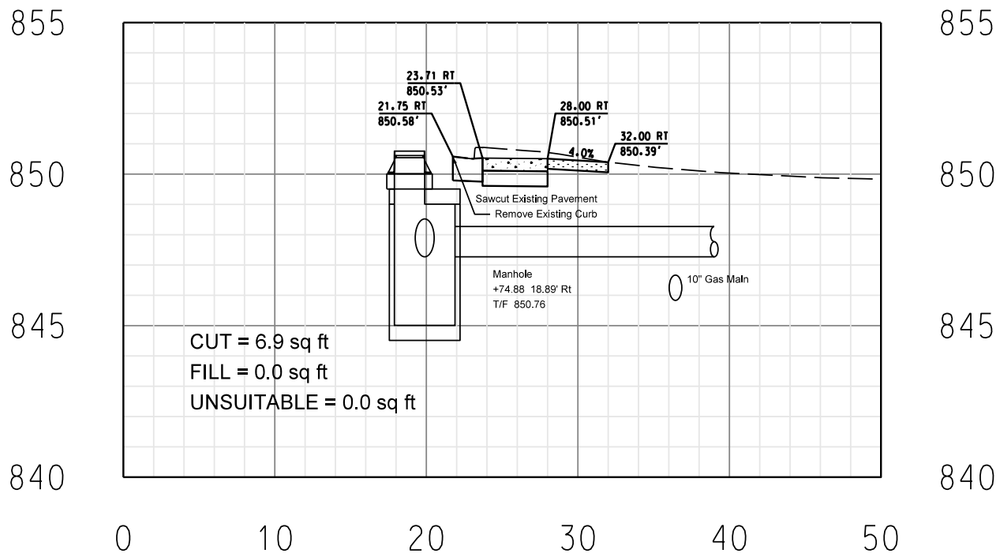

123+75.00

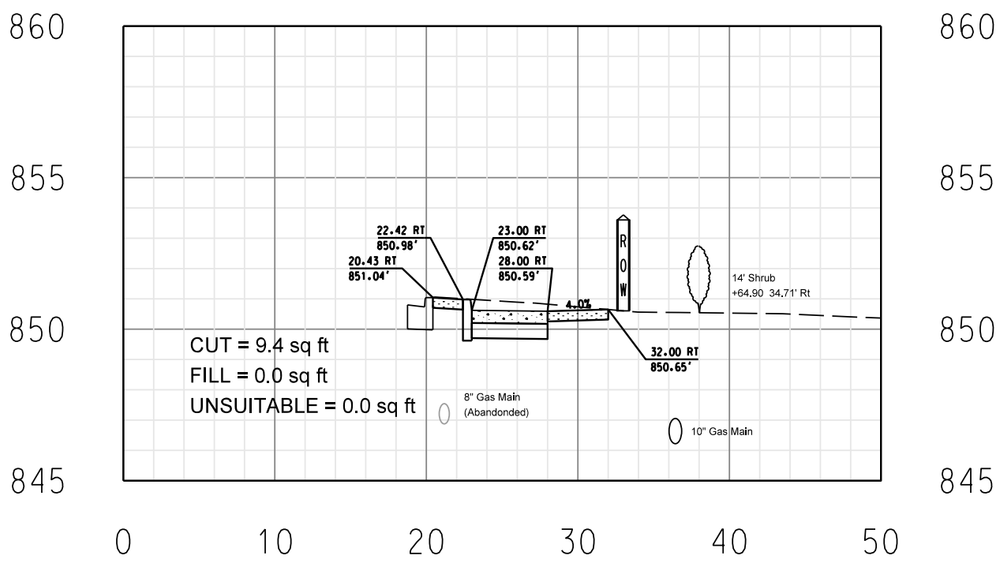

123+70.00

LEGEND

- 2.5" HMA PAVEMENT MIX "D" N50
- 6" PCC DRIVEWAY PAVEMENT
- TOPSOIL, FURNISH & PLACE 4"
- 5" PCC SIDEWALK
- 6" AGGREGATE BASE COURSE, TYPE A

REVISIONS / REMARKS			
NO.	DESCRIPTION	DATE	BY
		/ /	
		/ /	

SURVEYOR:
DSGNR/LIAISON:
PLOTTED BY: hdrmc 2/18/206

LakeCounty
Division of Transportation

ELA ROAD RESURFACING

CROSS SECTIONS STA. 123+70.00 TO STA. 123+80.00

ROUTE	SECTION	SECTION NUMBER	SHEET	SHEETS
CH60	144	15-00144-21-RS	63	150

FILE NAME: U:\Design\Sullivan\Elo Rd Sidewalk\EloRd Cross Sections.dgn

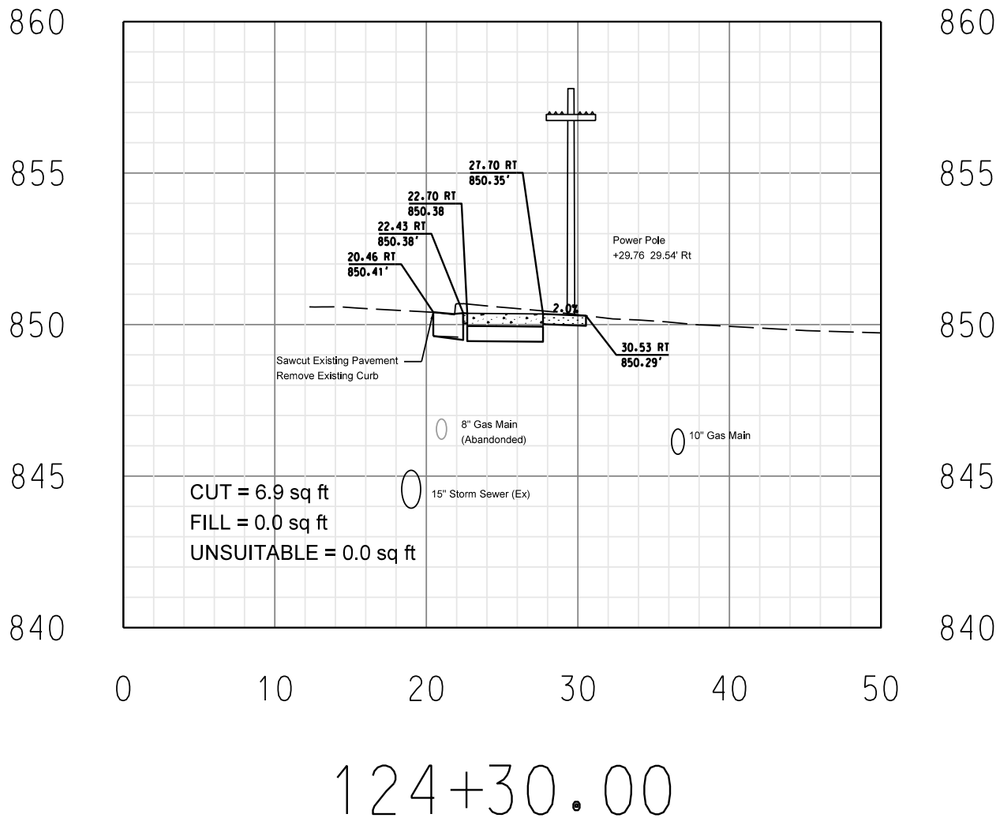

124+30.00

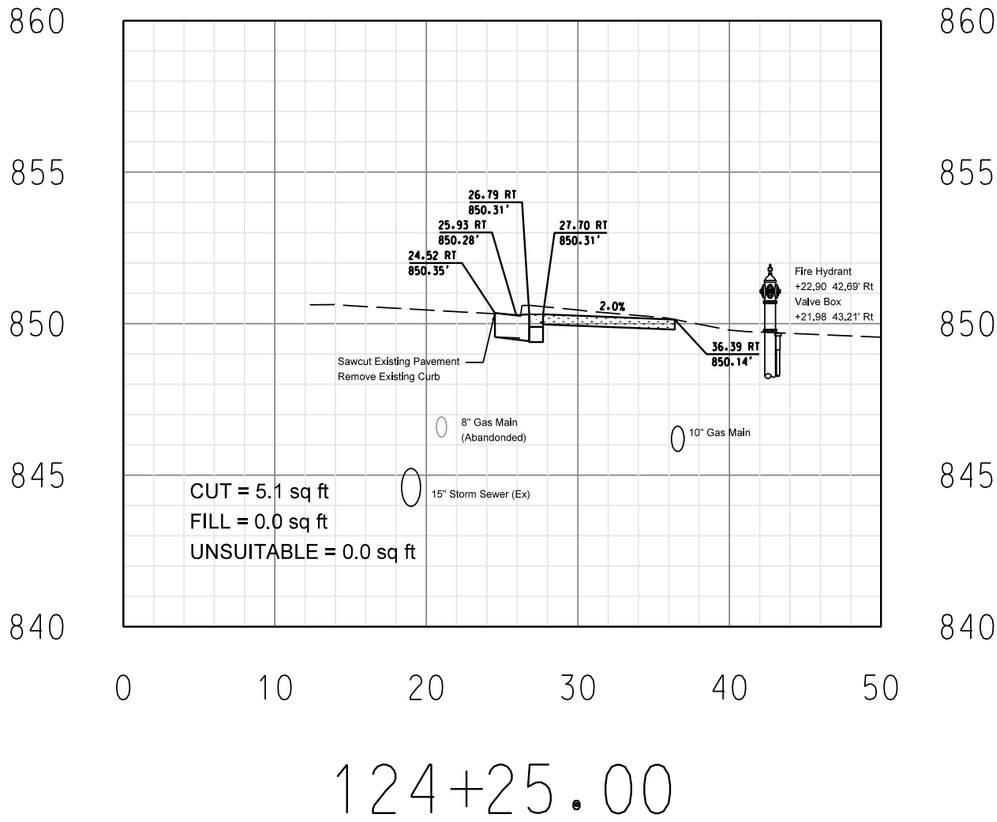

124+25.00

LEGEND

- 2.5" HMA PAVEMENT MIX "D" N50
- 6" PCC DRIVEWAY PAVEMENT
- TOPSOIL, FURNISH & PLACE 4"
- 5" PCC SIDEWALK
- 6" AGGREGATE BASE COURSE, TYPE A

NO.	REVISIONS / REMARKS DESCRIPTION	DATE	BY
		/ /	
		/ /	

SURVEYOR:
DSGNR/LIAISON:
PLOTTED BY: hdrmc 2/18/2016

LakeCounty
Division of Transportation

ELA ROAD RESURFACING

CROSS SECTIONS STA. 124+25.00 TO STA. 124+30.00

ROUTE	SECTION	SECTION NUMBER	SHEET	SHEETS
CH60	144	15-00144-21-RS	64	150

FILE NAME: U:\Design\Sullivan\Elo Rd Sidewalk\Eldrd Cross Sections.dgn

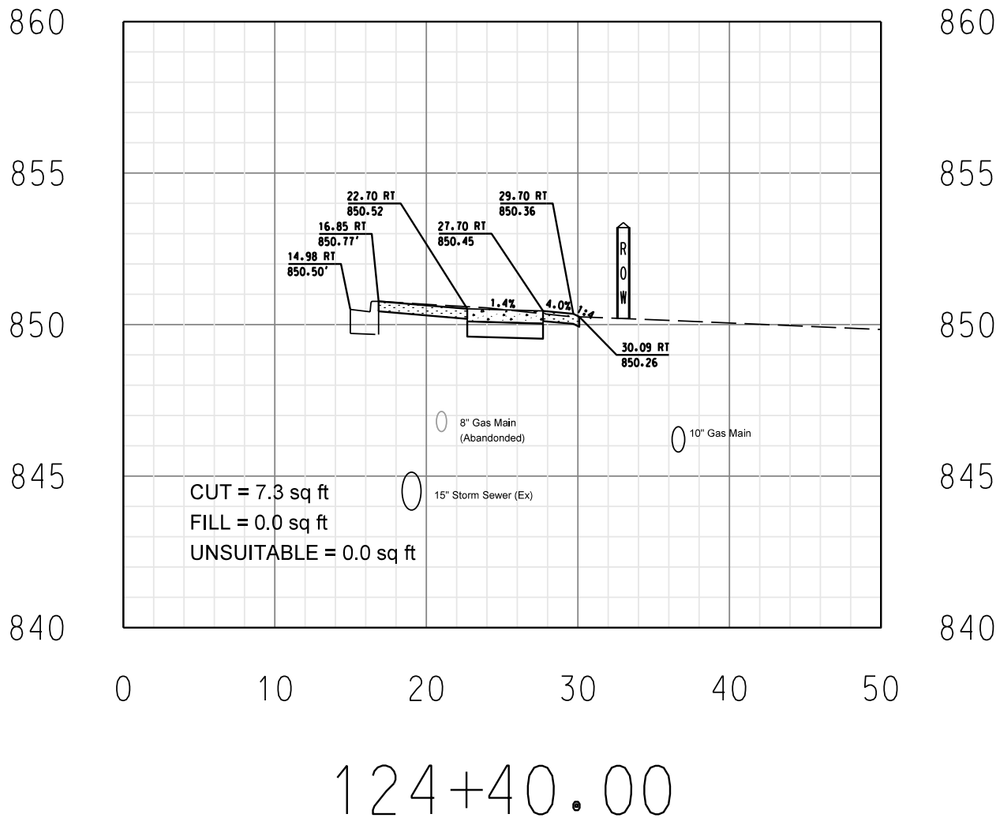

124+40.00

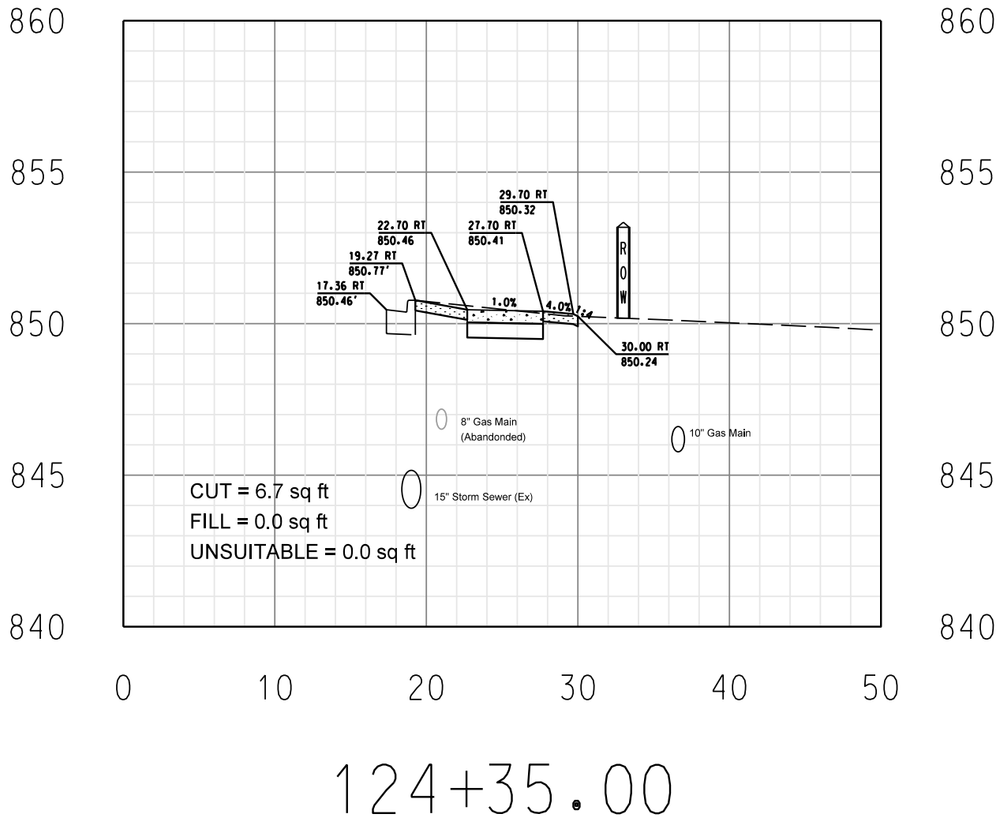

124+35.00

LEGEND

- 2.5" HMA PAVEMENT MIX "D" N50
- 6" PCC DRIVEWAY PAVEMENT
- TOPSOIL, FURNISH & PLACE 4"
- 5" PCC SIDEWALK
- 6" AGGREGATE BASE COURSE, TYPE A

REVISIONS / REMARKS			
NO.	DESCRIPTION	DATE	BY
		/ /	
		/ /	

SURVEYOR:
DSGNR/LIAISON:
PLOTTED BY: hdrmc 2/18/2016

LakeCounty
Division of Transportation

ELA ROAD RESURFACING

CROSS SECTIONS STA. 124+35.00 TO STA. 124+40.00

ROUTE	SECTION	SECTION NUMBER	SHEET	SHEETS
CH60	144	15-00144-21-RS	65	150

FILE NAME: U:\Design\Sullivan\Elo Rd Sidewalk\Eldrd Cross Sections.dgn

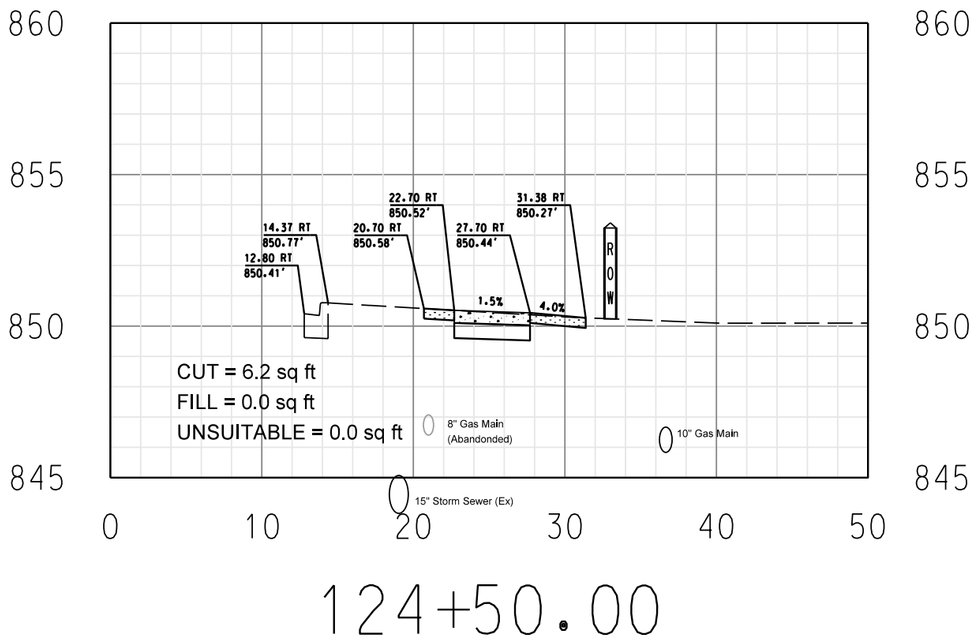

124+50.00

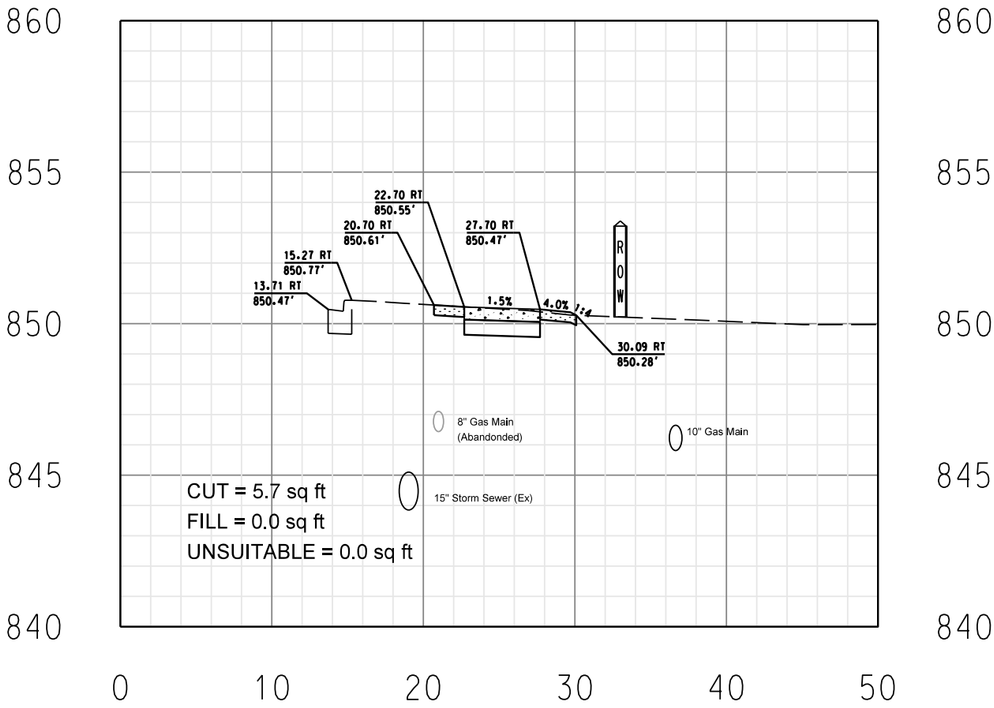

124+45.00

LEGEND

- 2.5" HMA PAVEMENT MIX "D" N50
- 6" PCC DRIVEWAY PAVEMENT
- TOPSOIL, FURNISH & PLACE 4"
- 5" PCC SIDEWALK
- 6" AGGREGATE BASE COURSE, TYPE A

REVISIONS / REMARKS			
NO.	DESCRIPTION	DATE	BY
		/ /	
		/ /	

SURVEYOR:
DSGNR/LIAISON:
PLOTTED BY: hdrmc 2/18/2016

LakeCounty
Division of Transportation

ELA ROAD RESURFACING

CROSS SECTIONS STA. 124+45.00 TO STA. 124+50.00

ROUTE	SECTION	SECTION NUMBER	SHEET	SHEETS
CH60	144	15-00144-21-RS	66	150

FILE NAME: U:\Design\Sullivan\Elo Rd Sidewalk\Eldrd Cross Sections.dgn

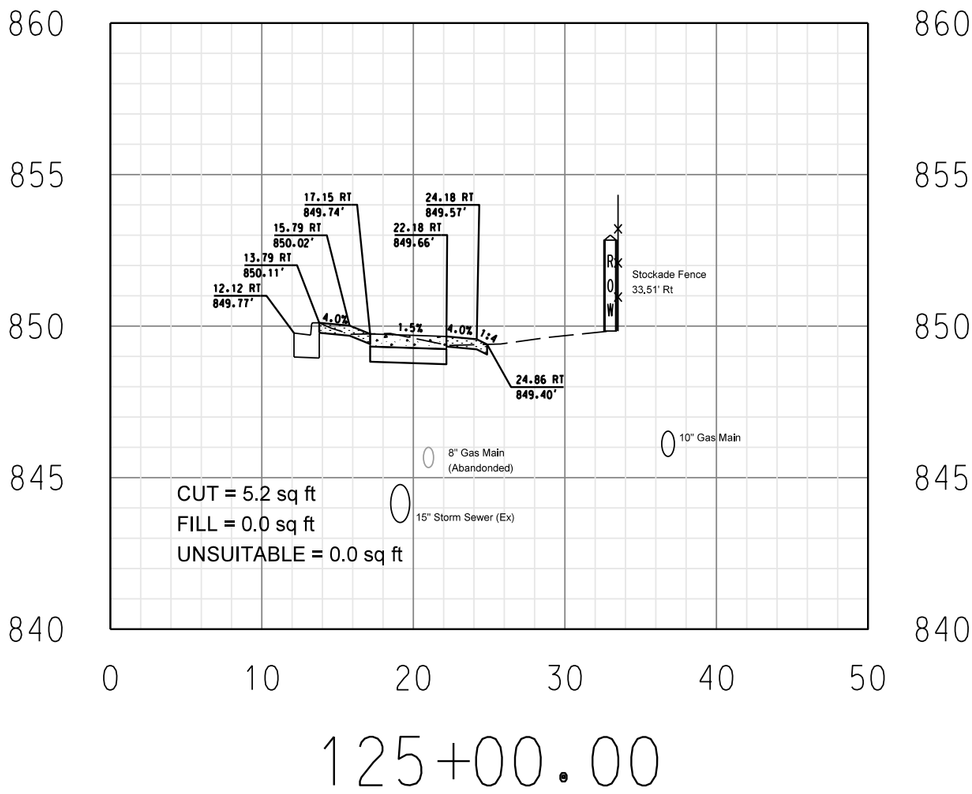

125+00.00

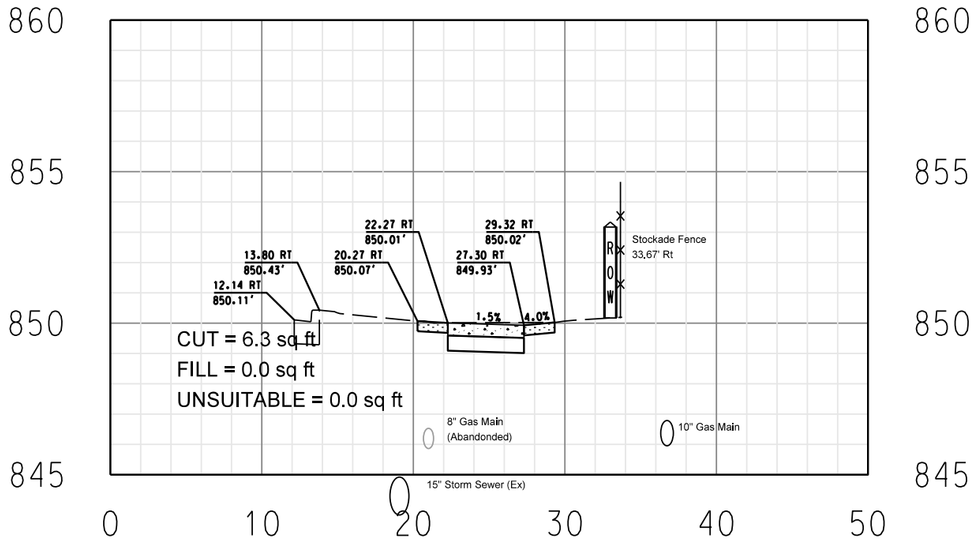

124+75.00

LEGEND

- 2.5" HMA PAVEMENT MIX "D" N50
- 6" PCC DRIVEWAY PAVEMENT
- TOPSOIL, FURNISH & PLACE 4"
- 5" PCC SIDEWALK
- 6" AGGREGATE BASE COURSE, TYPE A

REVISIONS / REMARKS			
NO.	DESCRIPTION	DATE	BY
		/ /	
		/ /	

SURVEYOR:
DSGNR/LIAISON:
PLOTTED BY: hdrmc 2/18/2016

LakeCounty
Division of Transportation

ELA ROAD RESURFACING

CROSS SECTIONS STA. 124+75.00 TO STA. 125+00.00

ROUTE	SECTION	SECTION NUMBER	SHEET	SHEETS
CH60	144	15-00144-21-RS	67	150

FILE NAME: U:\Design\Sullivan\Ela Rd Sidewalk\Eland Cross Sections.dgn

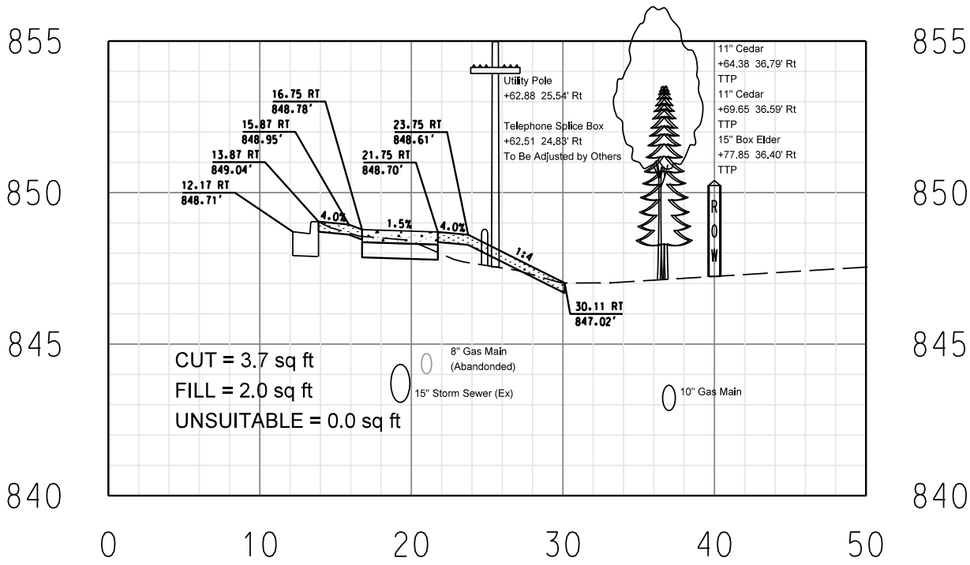

125+75.00

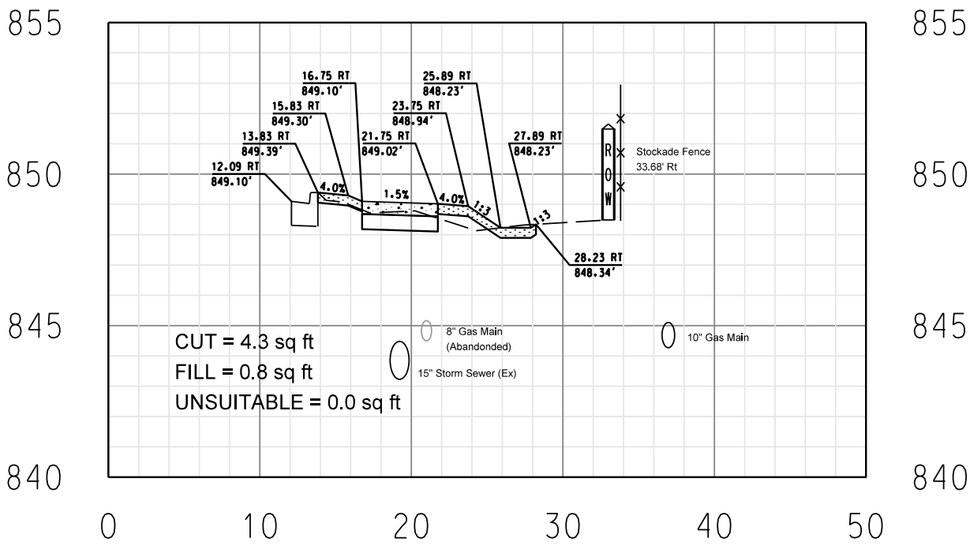

125+50.00

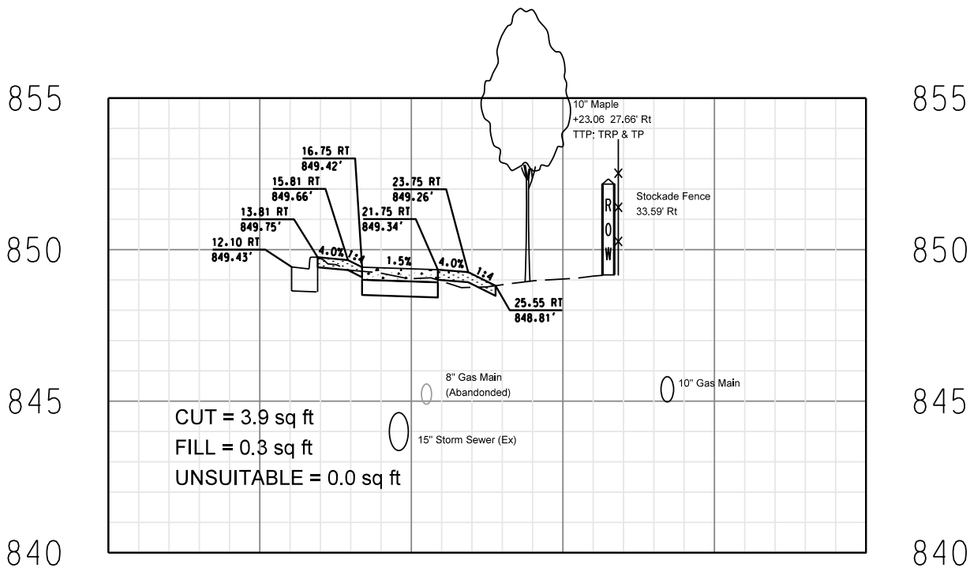

125+25.00

LEGEND

- 2.5" HMA PAVEMENT MIX "D" N50
- 6" PCC DRIVEWAY PAVEMENT
- TOPSOIL, FURNISH & PLACE 4"
- 5" PCC SIDEWALK
- 6" AGGREGATE BASE COURSE, TYPE A

REVISIONS / REMARKS			
NO.	DESCRIPTION	DATE	BY
		/ /	
		/ /	

SURVEYOR:
DSGNR/LIAISON:
PLOTTED BY: hdrmc 2/18/206

LakeCounty
Division of Transportation

ELA ROAD RESURFACING

CROSS SECTIONS STA. 125+25.00 TO STA. 125+75.00

ROUTE	SECTION	SECTION NUMBER	SHEET	SHEETS
CH60	144	15-00144-21-RS	68	150

FILE NAME: U:\Design\Sullivan\Elo Rd Sidewalk\Eloro Cross Sections.dgn

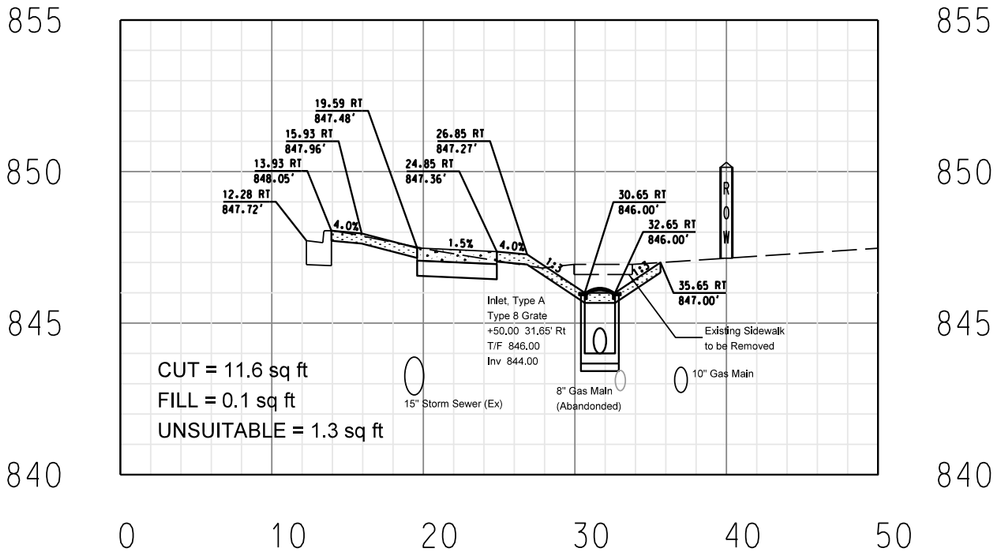

126+50.00

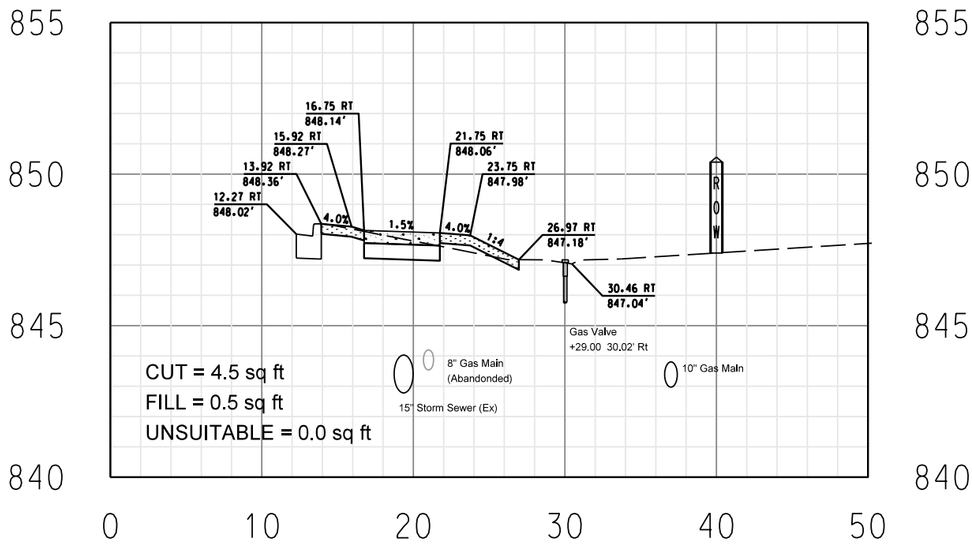

126+25.00

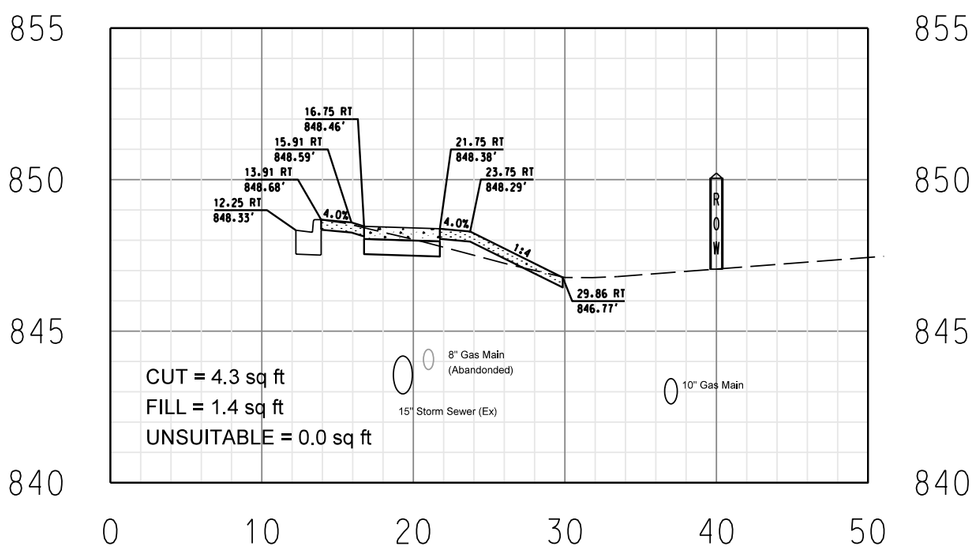

126+00.00

LEGEND

- 2.5" HMA PAVEMENT MIX "D" N50
- 6" PCC DRIVEWAY PAVEMENT
- TOPSOIL, FURNISH & PLACE 4"
- 5" PCC SIDEWALK
- 6" AGGREGATE BASE COURSE, TYPE A

REVISIONS / REMARKS				
NO.	DESCRIPTION	DATE	BY	
		/ /	SURVEYOR:	
		/ /	DSGNR/LIAISON:	
			PLOTTED BY:	
			hdrmc 2/18/206	/

FILE NAME: U:\Design\Sullivan\Elo Rd Sidewalk\EloRd Cross Sections.dgn

LakeCounty
Division of Transportation

ELA ROAD RESURFACING

CROSS SECTIONS STA. 126+00.00 TO STA. 126+50.00

ROUTE	SECTION	SECTION NUMBER	SHEET	SHEETS
CH60	144	15-00144-21-RS	69	150

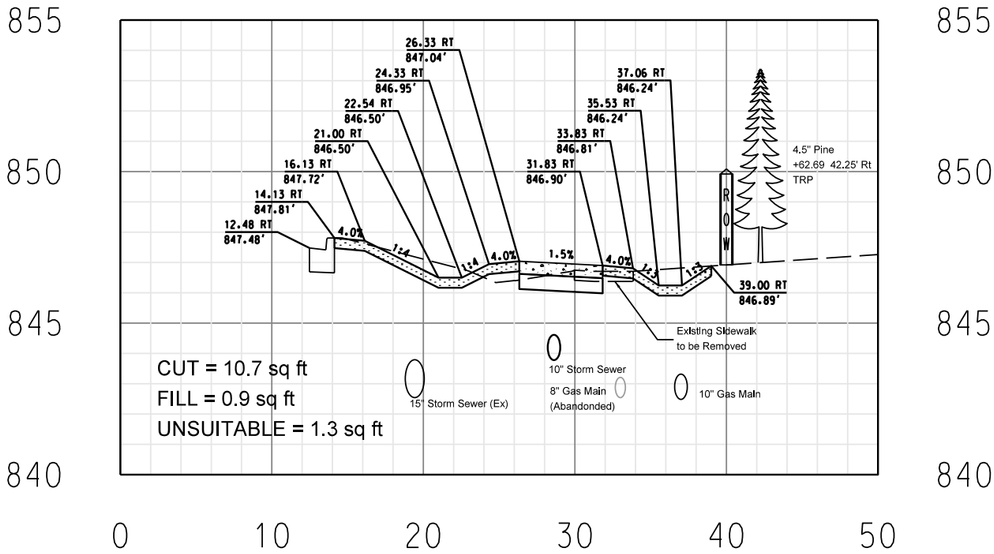

126+65.00

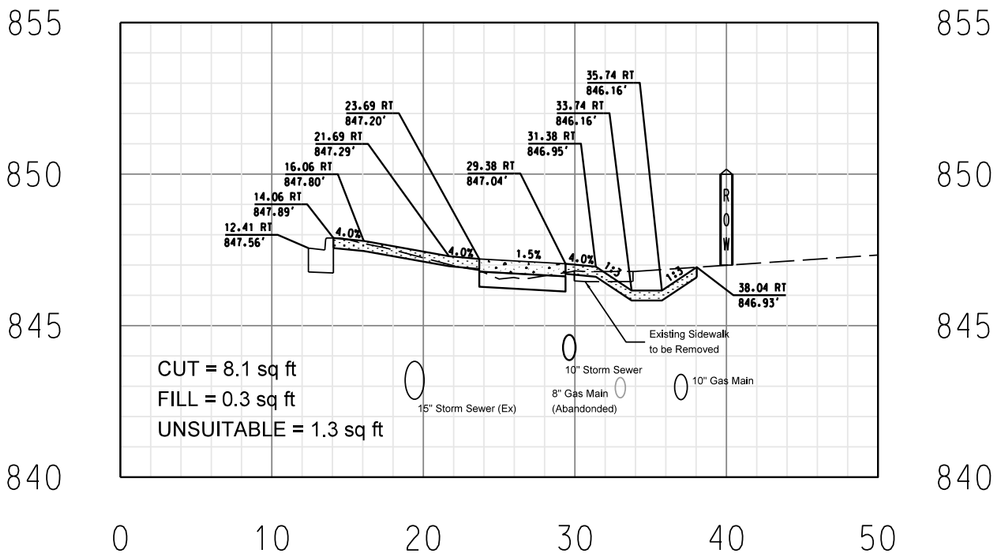

126+60.00

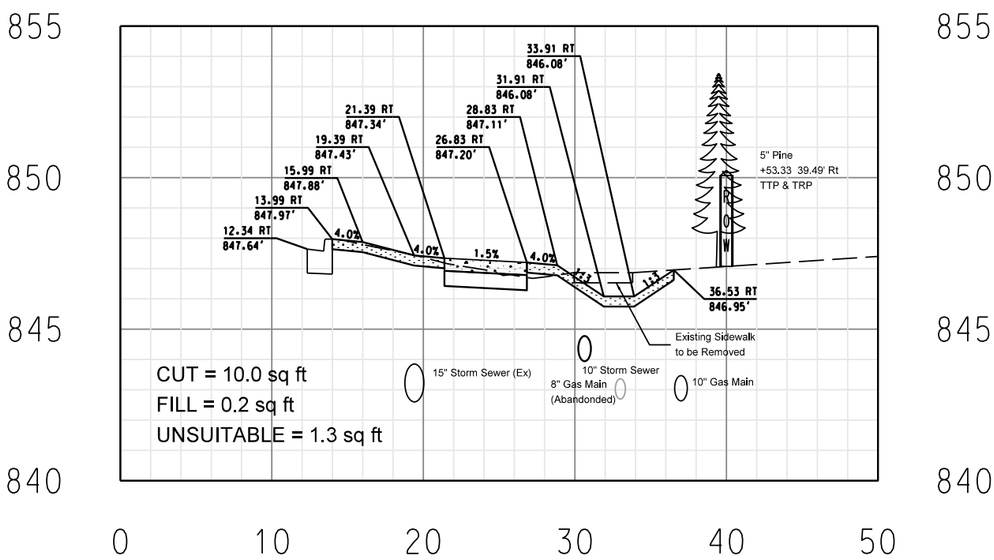

126+55.00

LEGEND

- 2.5" HMA PAVEMENT MIX "D" N50
- 6" PCC DRIVEWAY PAVEMENT
- TOPSOIL, FURNISH & PLACE 4"
- 5" PCC SIDEWALK
- 6" AGGREGATE BASE COURSE, TYPE A

REVISIONS / REMARKS				
NO.	DESCRIPTION	DATE	BY	
		/ /	SURVEYOR:	
		/ /	DSGNR/LIAISON:	
			PLOTTED BY:	
			hdrmc 2/18/206	/

FILE NAME: U:\Design\Sullivan\Elo Rd Sidewalk\EloRd Cross Sections.dgn

LakeCounty
Division of Transportation

ELA ROAD RESURFACING

CROSS SECTIONS STA. 126+55.00 TO STA. 126+65.00

ROUTE	SECTION	SECTION NUMBER	SHEET	SHEETS
CH60	144	15-00144-21-RS	70	150

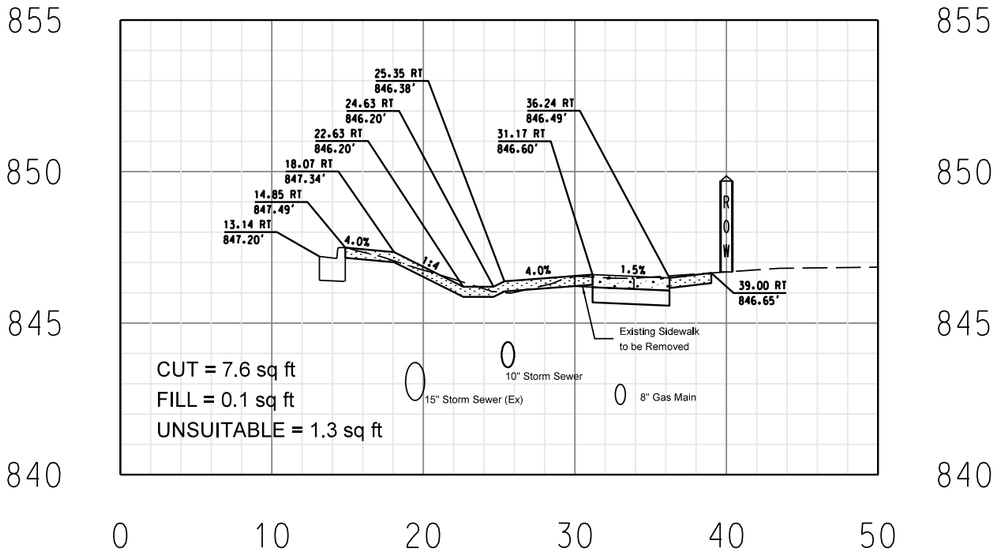

126+80.00

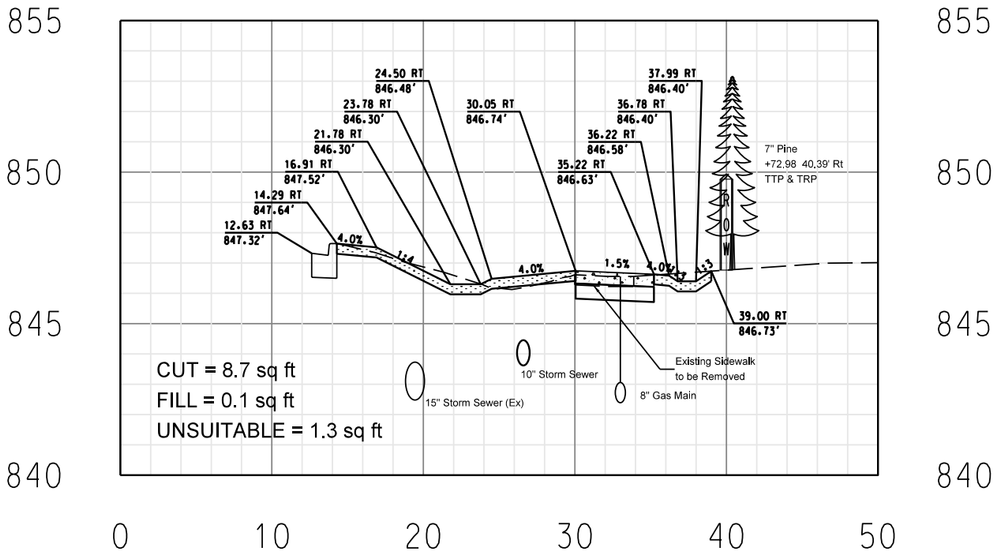

126+75.00

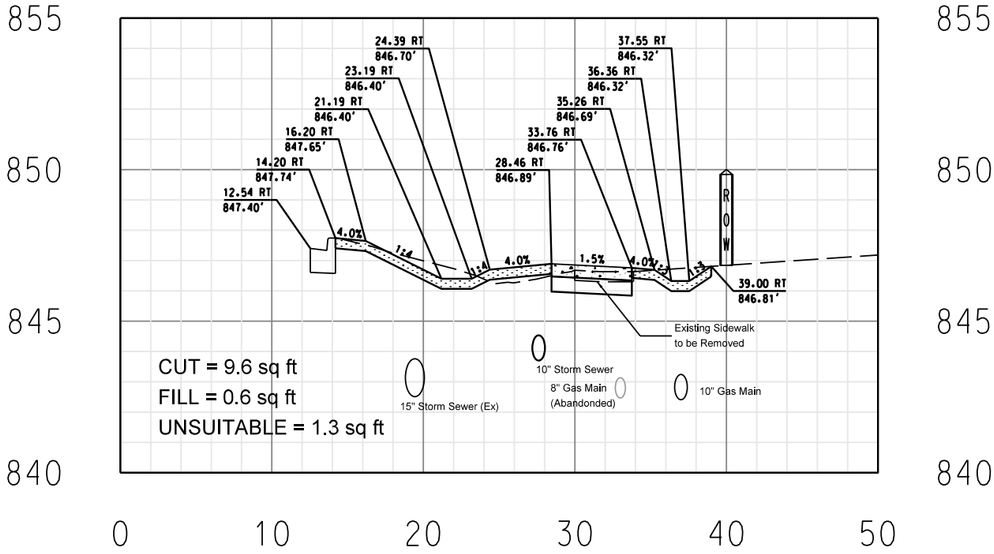

126+70.00

LEGEND

- 2.5" HMA PAVEMENT MIX "D" N50
- 6" PCC DRIVEWAY PAVEMENT
- TOPSOIL, FURNISH & PLACE 4"
- 5" PCC SIDEWALK
- 6" AGGREGATE BASE COURSE, TYPE A

NO.	REVISIONS / REMARKS DESCRIPTION	DATE	BY
		/ /	
		/ /	

SURVEYOR:
DSGNR/LIAISON:
PLOTTED BY: hdrmc 2/18/206

LakeCounty
Division of Transportation

ELA ROAD RESURFACING

CROSS SECTIONS STA. 126+70.00 TO STA. 126+80.00

ROUTE	SECTION	SECTION NUMBER	SHEET	SHEETS
CH60	144	15-00144-21-RS	71	150

FILE NAME: U:\Design\Sullivan\Elo Rd Sidewalk\Eldrd Cross Sections.dgn

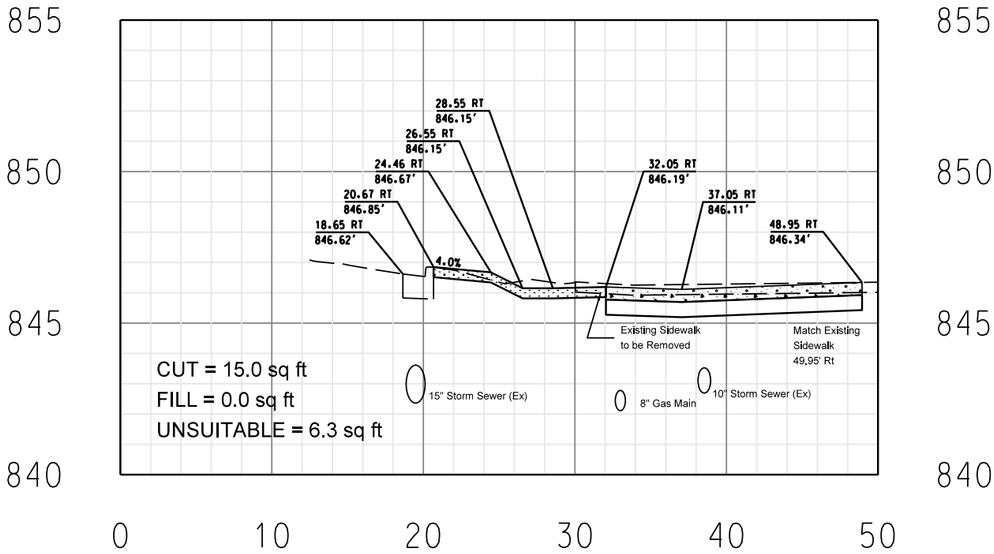

126+95.00

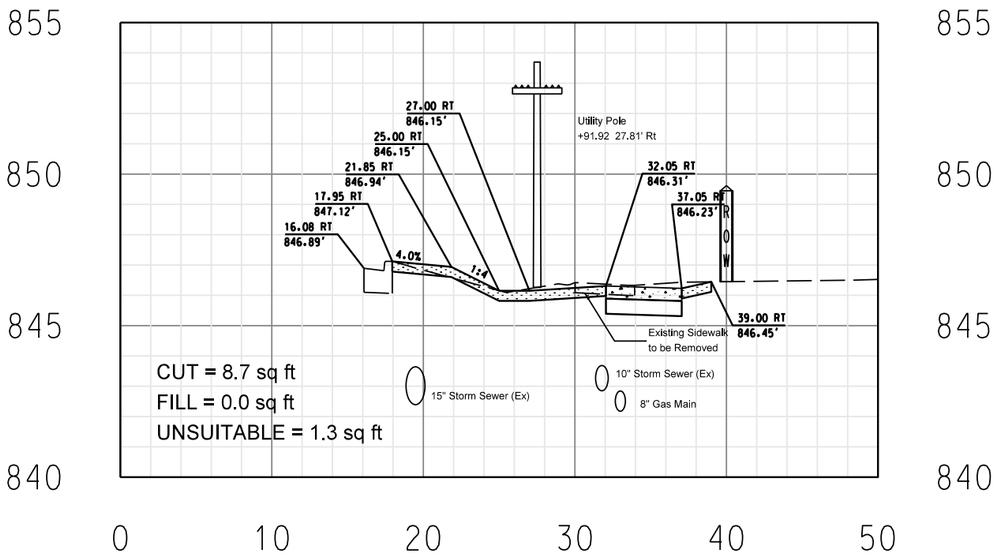

126+90.00

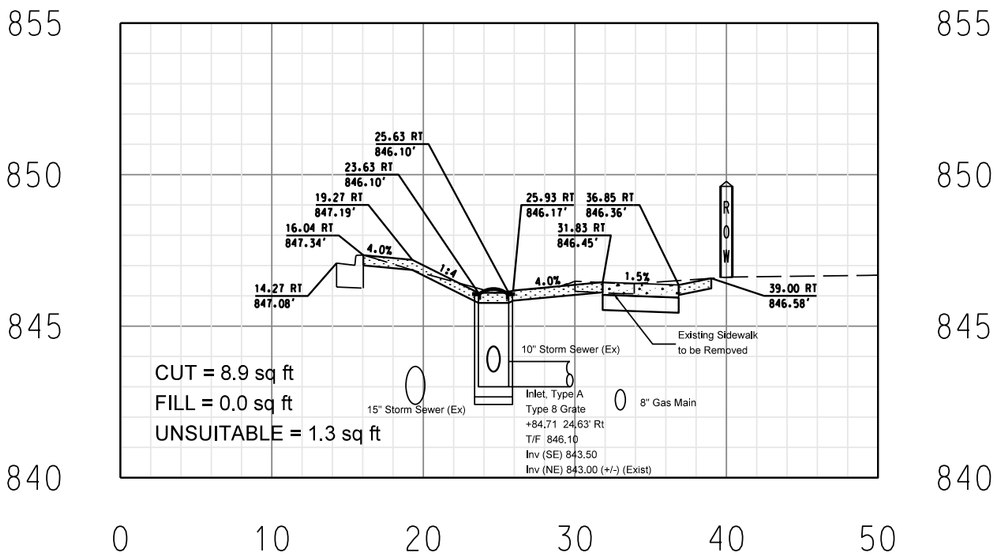

126+85.00

LEGEND

- 2.5" HMA PAVEMENT MIX "D" N50
- 6" PCC DRIVEWAY PAVEMENT
- TOPSOIL, FURNISH & PLACE 4"
- 5" PCC SIDEWALK
- 6" AGGREGATE BASE COURSE, TYPE A

REVISIONS / REMARKS			
NO.	DESCRIPTION	DATE	BY
		/ /	
		/ /	

SURVEYOR:
DSGNR/LIAISON:
PLOTTED BY: hdrmc 2/8/206

LakeCounty
Division of Transportation

ELA ROAD RESURFACING

CROSS SECTIONS STA. 126+85.00 TO STA. 126+95.00

ROUTE	SECTION	SECTION NUMBER	SHEET	SHEETS
CH60	144	15-00144-21-RS	72	150

FILE NAME: U:\Design\Sullivan\Elo Rd Sidewalk\EloRd Cross Sections.dgn

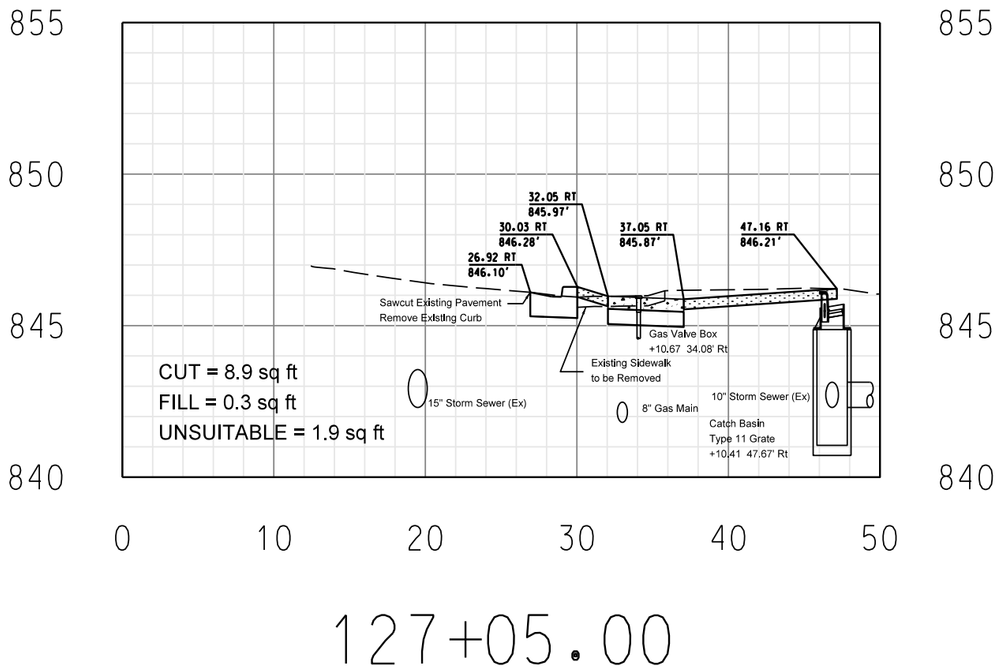

127+05.00

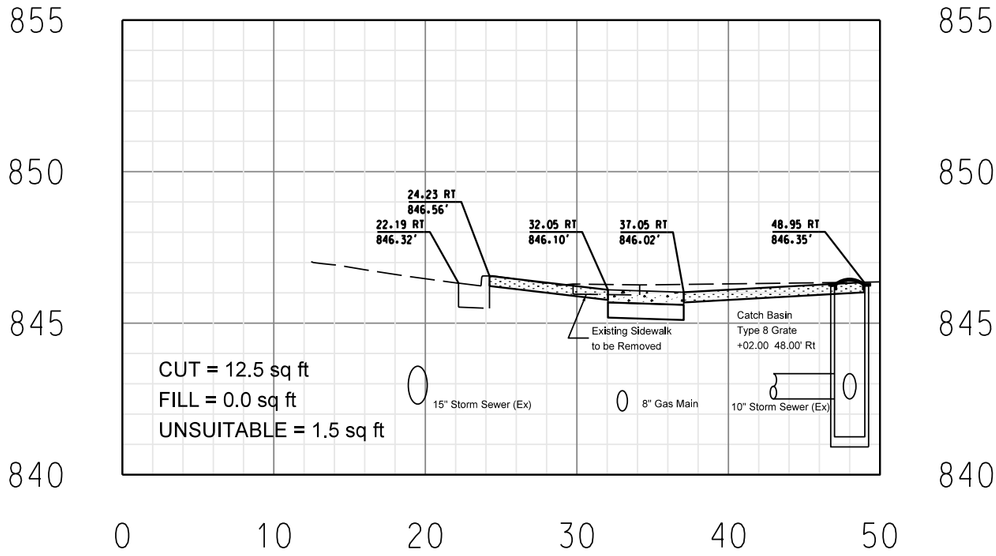

127+00.00

LEGEND

- 2.5" HMA PAVEMENT MIX "D" N50
- 6" PCC DRIVEWAY PAVEMENT
- TOPSOIL, FURNISH & PLACE 4"
- 5" PCC SIDEWALK
- 6" AGGREGATE BASE COURSE, TYPE A

REVISIONS / REMARKS			
NO.	DESCRIPTION	DATE	BY
		/ /	
		/ /	

SURVEYOR:
DSGNR/LIAISON:
PLOTTED BY:
hdrmc 2/18/2016

LakeCounty
Division of Transportation

ELA ROAD RESURFACING

CROSS SECTIONS STA. 127+00.00 TO STA. 127+05.00

ROUTE	SECTION	SECTION NUMBER	SHEET	SHEETS
CH60	144	15-00144-21-RS	73	150

FILE NAME: U:\Design\Sullivan\Elo Rd Sidewalk\Eload Cross Sections.dgn

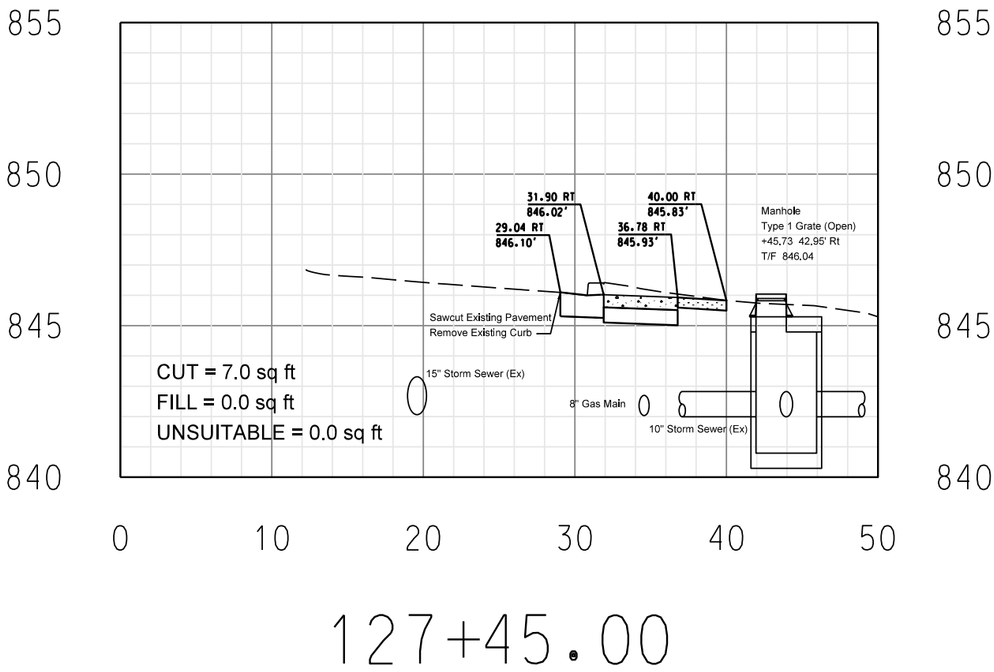

127+45.00

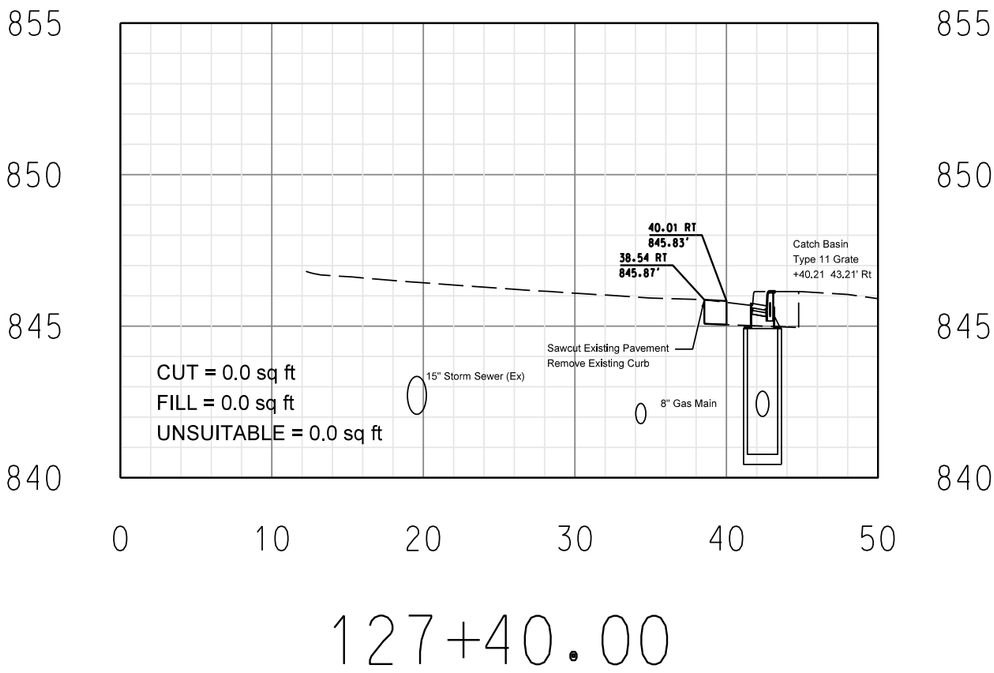

127+40.00

LEGEND

- 2.5" HMA PAVEMENT MIX "D" N50
- 6" PCC DRIVEWAY PAVEMENT
- TOPSOIL, FURNISH & PLACE 4"
- 5" PCC SIDEWALK
- 6" AGGREGATE BASE COURSE, TYPE A

REVISIONS / REMARKS			
NO.	DESCRIPTION	DATE	BY
		/ /	
		/ /	

SURVEYOR:
DSGNR/LIAISON:
PLOTTED BY: hdrmc 2/18/2016

LakeCounty
Division of Transportation

ELA ROAD RESURFACING

CROSS SECTIONS STA. 127+40.00 TO STA. 127+45.00

ROUTE	SECTION	SECTION NUMBER	SHEET	SHEETS
CH60	144	15-00144-21-RS	74	150

FILE NAME: U:\Design\Sullivan\Eto Rd Sidewalk\Eldrd Cross Sections.dgn

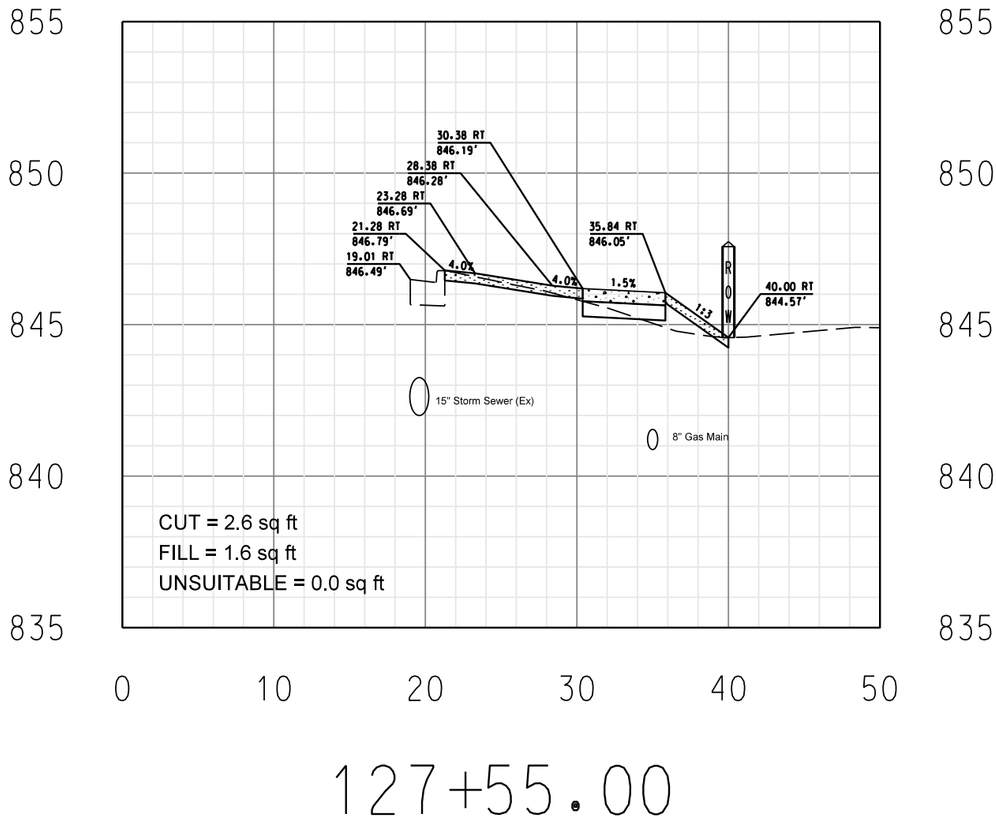

127+55.00

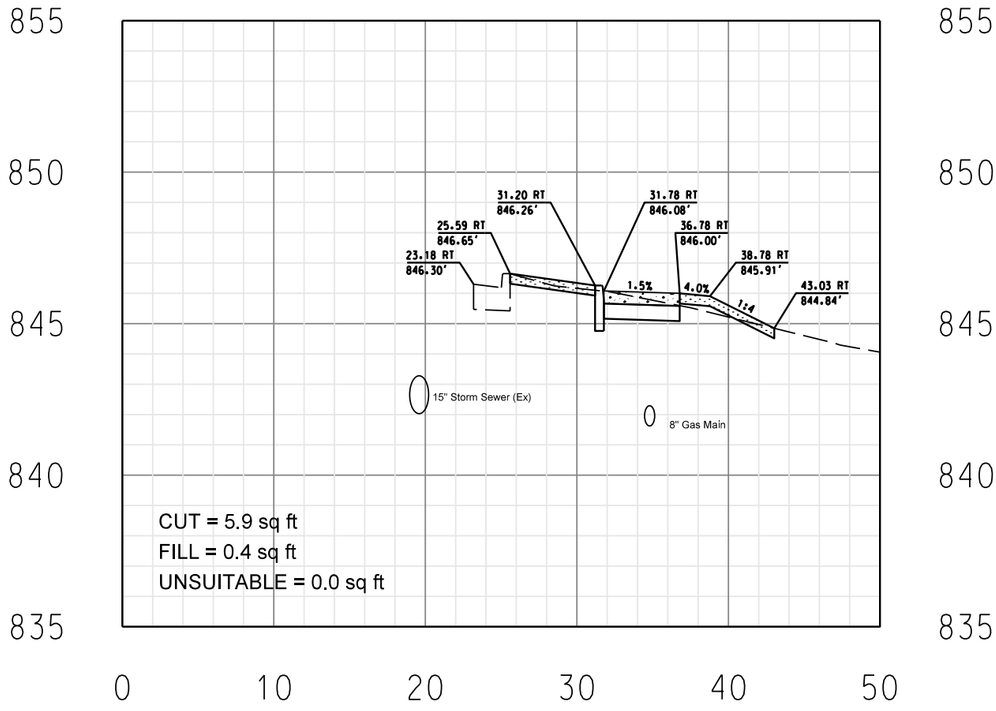

127+50.00

LEGEND

- 2.5" HMA PAVEMENT MIX "D" N50
- 6" PCC DRIVEWAY PAVEMENT
- TOPSOIL, FURNISH & PLACE 4"
- 5" PCC SIDEWALK
- 6" AGGREGATE BASE COURSE, TYPE A

REVISIONS / REMARKS			
NO.	DESCRIPTION	DATE	BY
		/ /	
		/ /	

SURVEYOR:
DSGNR/LIAISON:
PLOTTED BY: hdrmc 2/18/2016

LakeCounty
Division of Transportation

ELA ROAD RESURFACING

CROSS SECTIONS STA. 127+50.00 TO STA. 127+55.00

ROUTE	SECTION	SECTION NUMBER	SHEET	SHEETS
CH60	144	15-00144-21-RS	75	150

FILE NAME: U:\Design\Sullivan\Eto Rd Sidewalk\Eloro Cross Sections.dgn

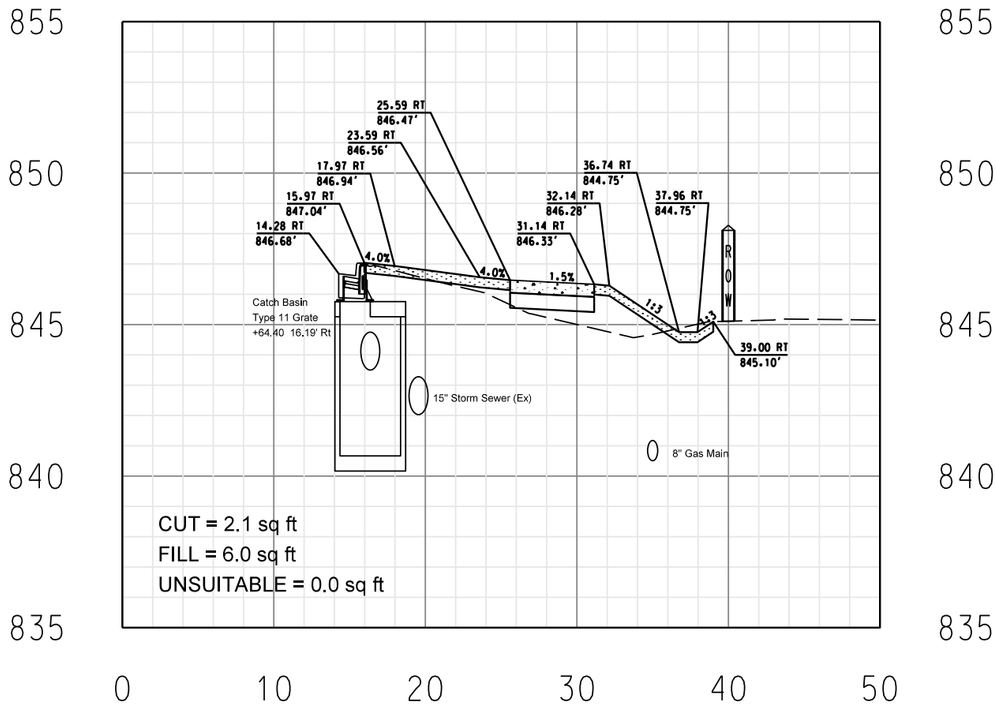

127+65.00

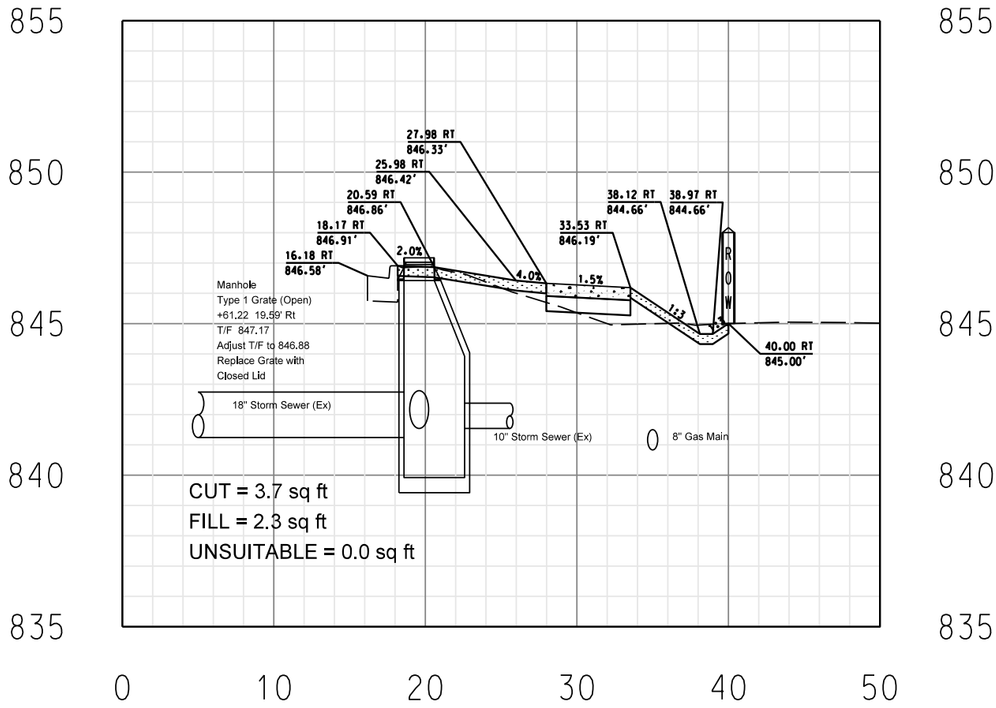

127+60.00

LEGEND

- 2.5" HMA PAVEMENT MIX "D" N50
- 6" PCC DRIVEWAY PAVEMENT
- TOPSOIL, FURNISH & PLACE 4"
- 5" PCC SIDEWALK
- 6" AGGREGATE BASE COURSE, TYPE A

REVISIONS / REMARKS			
NO.	DESCRIPTION	DATE	BY
		/ /	
		/ /	

SURVEYOR:
DSGNR/LIAISON:
PLOTTED BY: hdrmc 2/18/2016

LakeCounty
Division of Transportation

ELA ROAD RESURFACING

CROSS SECTIONS STA. 127+60.00 TO STA. 127+65.00

ROUTE	SECTION	SECTION NUMBER	SHEET	SHEETS
CH60	144	15-00144-21-RS	76	150

FILE NAME: U:\Design\Sullivan\Elo Rd Sidewalk\Eldrd Cross Sections.dgn

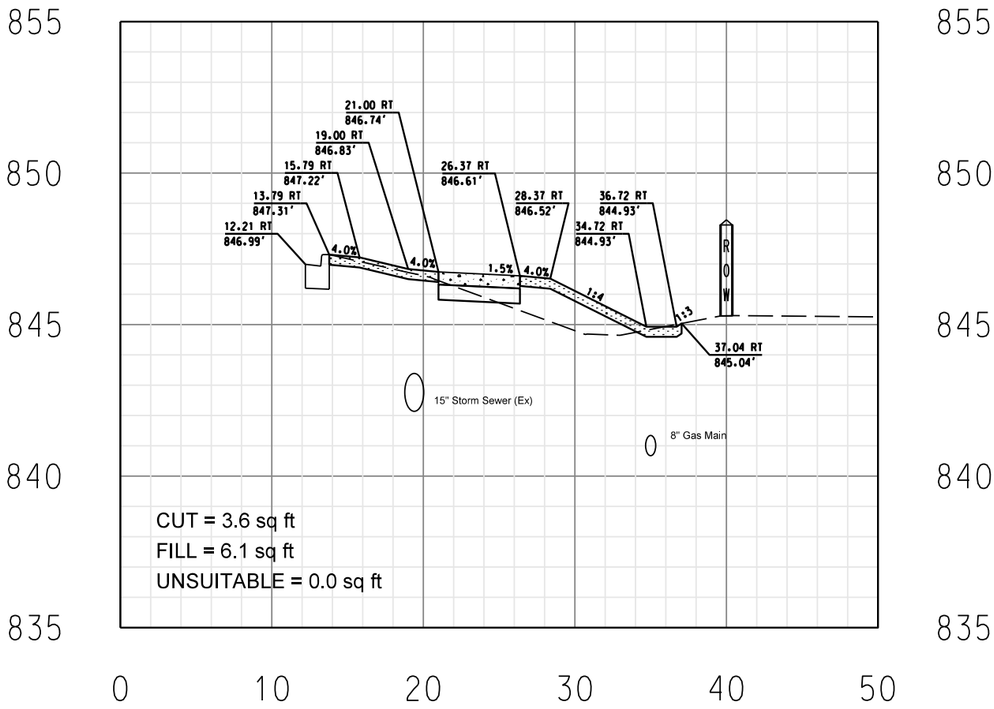

127+75.00

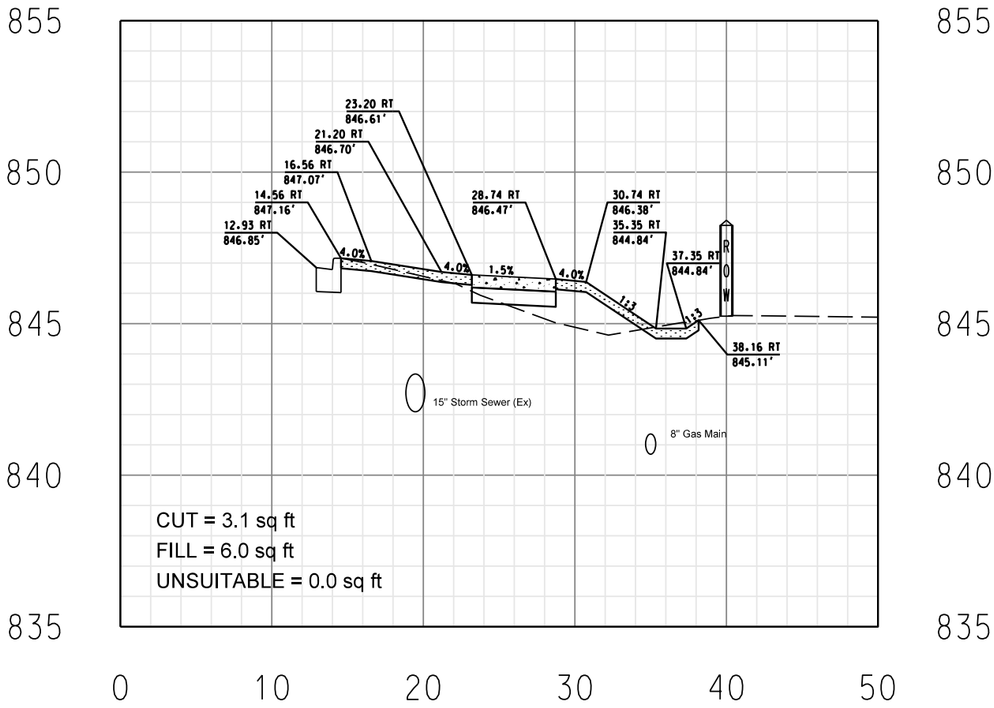

127+70.00

LEGEND

- 2.5" HMA PAVEMENT MIX "D" N50
- 6" PCC DRIVEWAY PAVEMENT
- TOPSOIL, FURNISH & PLACE 4"
- 5" PCC SIDEWALK
- 6" AGGREGATE BASE COURSE, TYPE A

NO.	REVISIONS / REMARKS DESCRIPTION	DATE	BY
		/ /	
		/ /	

SURVEYOR:
DSGNR/LIAISON:
PLOTTED BY: hdrmc 2/18/2016

LakeCounty
Division of Transportation

ELA ROAD RESURFACING

CROSS SECTIONS STA. 127+70.00 TO STA. 127+75.00

ROUTE	SECTION	SECTION NUMBER	SHEET	SHEETS
CH60	144	15-00144-21-RS	77	150

FILE NAME: U:\Design\Sullivan\Elo Rd Sidewalk\Eldrd Cross Sections.dgn

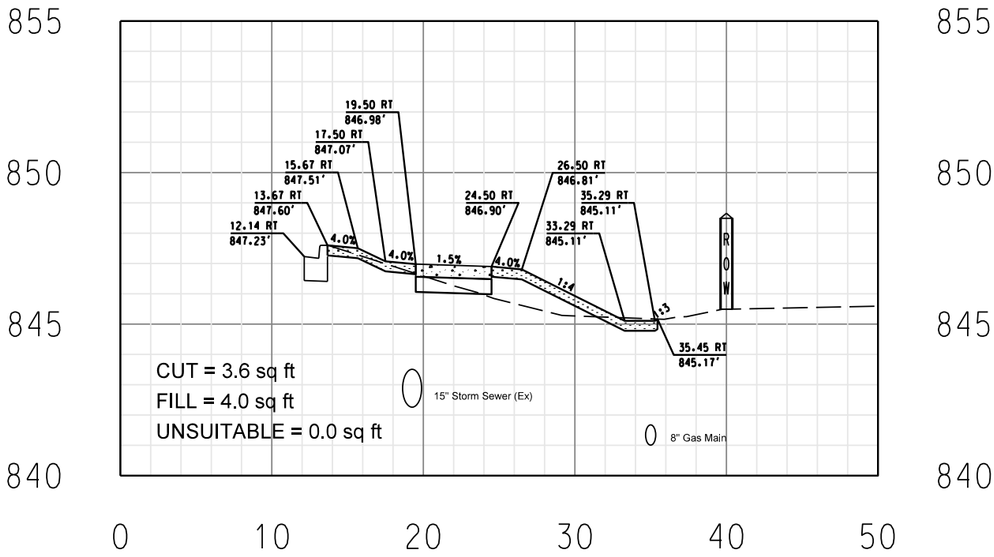

127+85.00

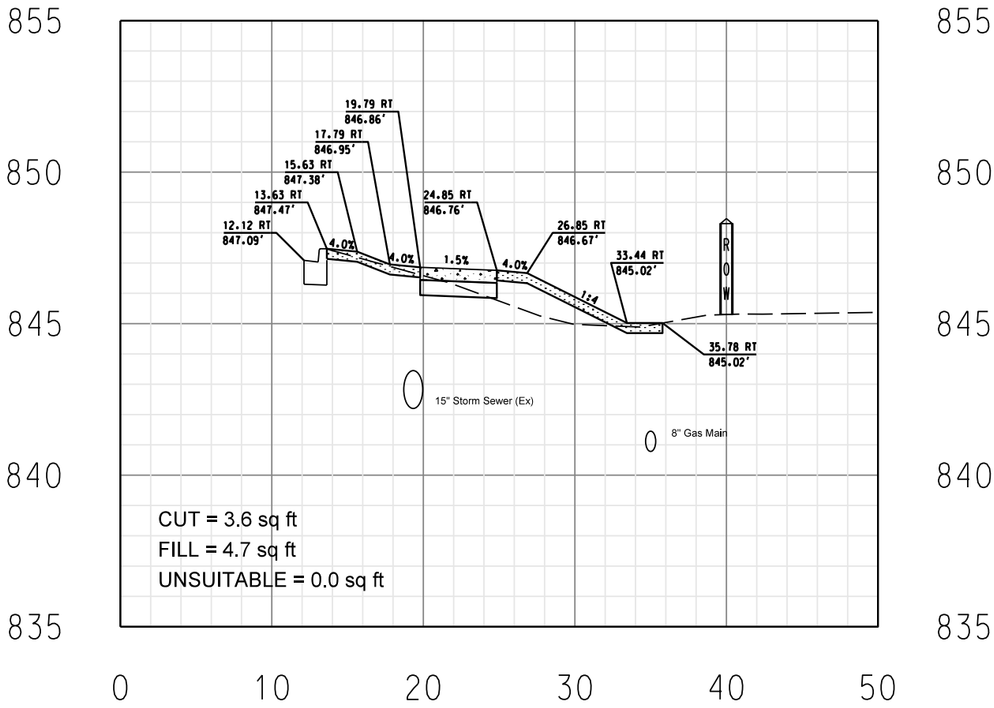

127+80.00

LEGEND

- 2.5" HMA PAVEMENT MIX "D" N50
- 6" PCC DRIVEWAY PAVEMENT
- TOPSOIL, FURNISH & PLACE 4"
- 5" PCC SIDEWALK
- 6" AGGREGATE BASE COURSE, TYPE A

REVISIONS / REMARKS			
NO.	DESCRIPTION	DATE	BY
		/ /	
		/ /	

SURVEYOR:
DSGNR/LIAISON:
PLOTTED BY:
hdrmc 2/18/2016

LakeCounty
Division of Transportation

ELA ROAD RESURFACING

CROSS SECTIONS STA. 127+80.00 TO STA. 127+85.00

ROUTE	SECTION	SECTION NUMBER	SHEET	SHEETS
CH60	144	15-00144-21-RS	78	150

FILE NAME: U:\Design\Sullivan\Elo Rd Sidewalk\Eldrd Cross Sections.dgn

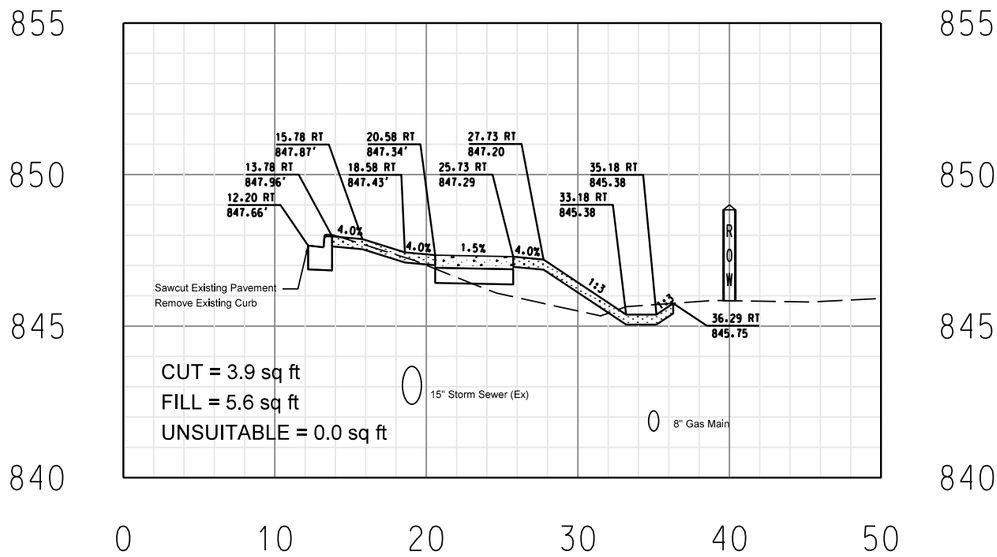

128+00.00

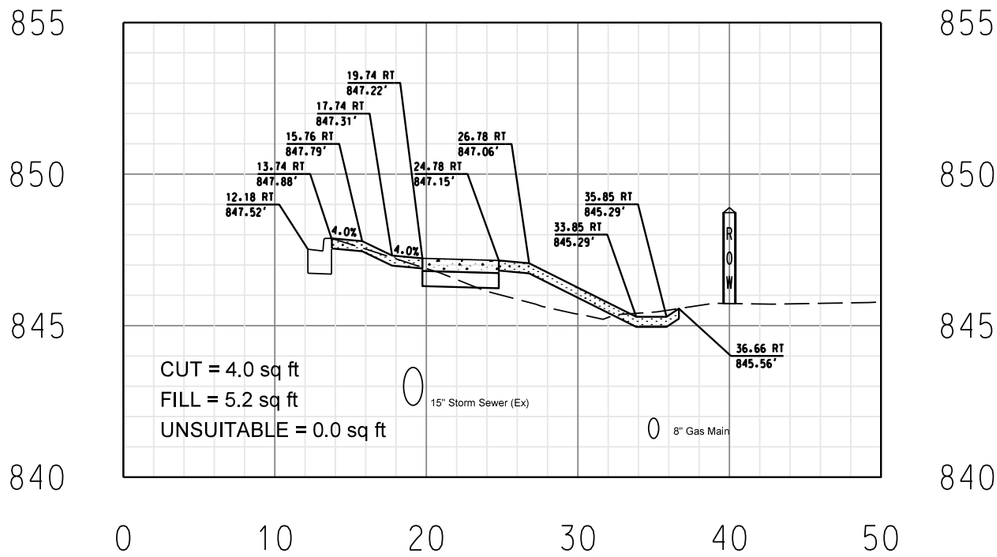

127+95.00

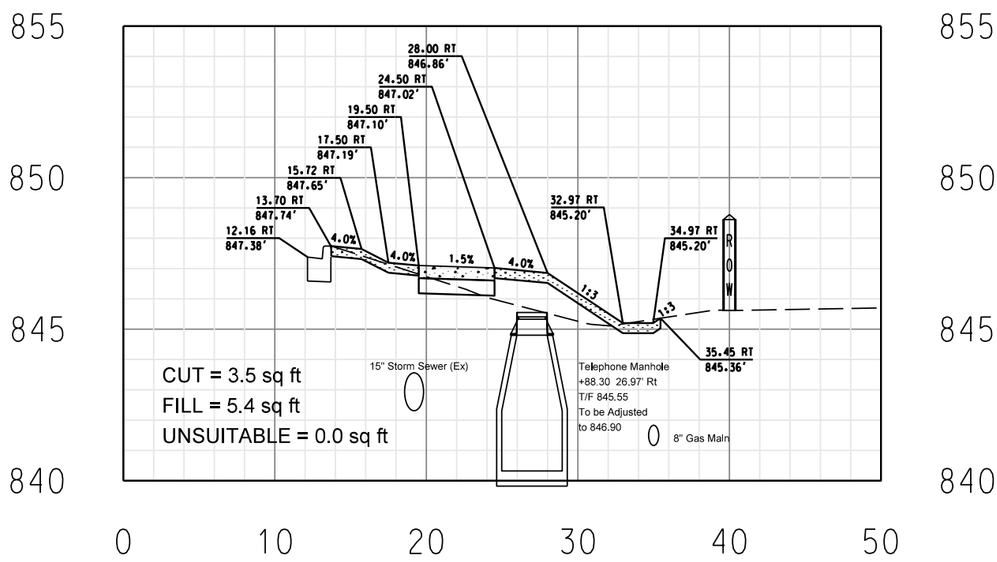

127+90.00

LEGEND

- 2.5" HMA PAVEMENT MIX "D" N50
- 6" PCC DRIVEWAY PAVEMENT
- TOPSOIL, FURNISH & PLACE 4"
- 5" PCC SIDEWALK
- 6" AGGREGATE BASE COURSE, TYPE A

REVISIONS / REMARKS			
NO.	DESCRIPTION	DATE	BY
		/ /	
		/ /	

SURVEYOR:
DSGNR/LIAISON:
PLOTTED BY: hdrmc 2/18/206

LakeCounty
Division of Transportation

ELA ROAD RESURFACING

CROSS SECTIONS STA. 127+90.00 TO STA. 128+00.00

ROUTE	SECTION	SECTION NUMBER	SHEET	SHEETS
CH60	144	15-00144-21-RS	79	150

FILE NAME: U:\Design\Sullivan\Elo Rd Sidewalk\Eldrd Cross Sections.dgn

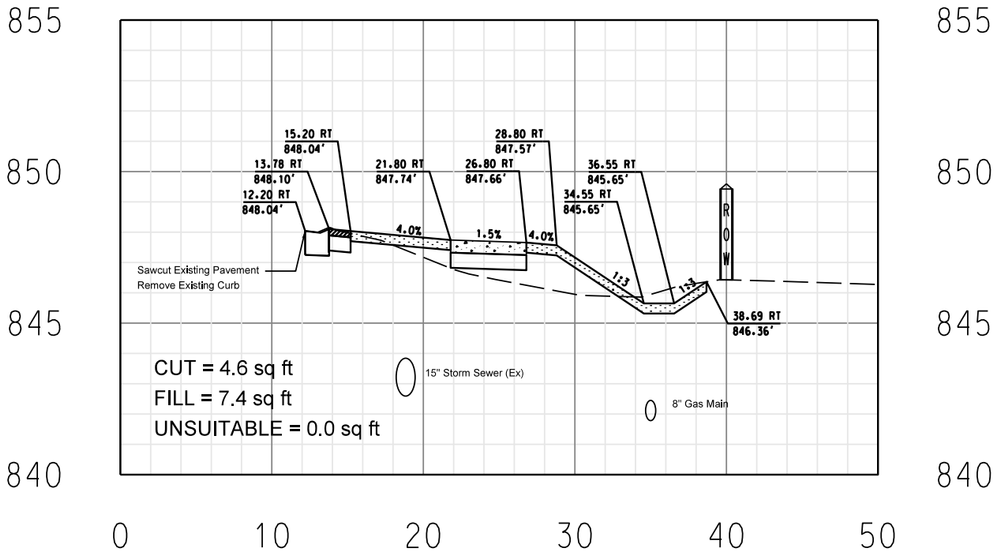

128+15.00

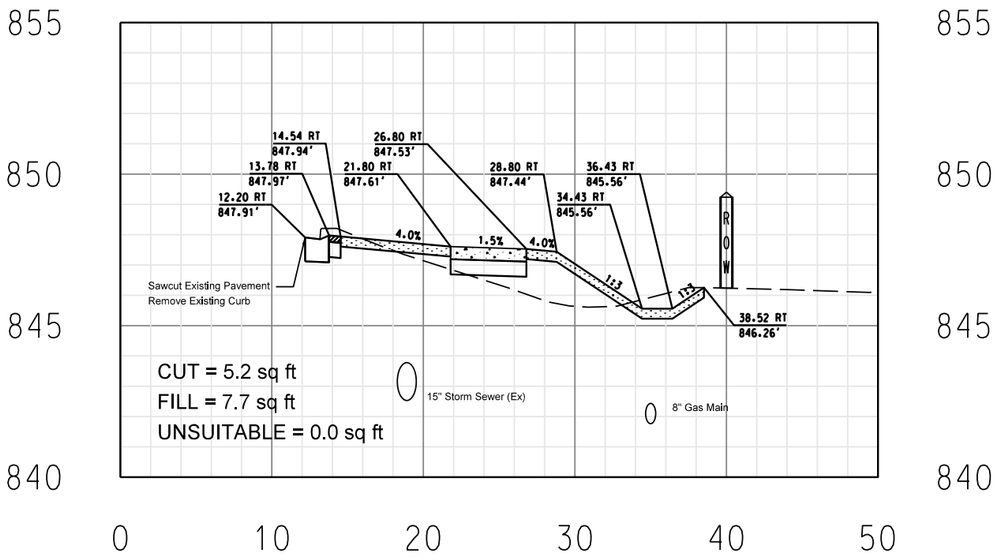

128+10.00

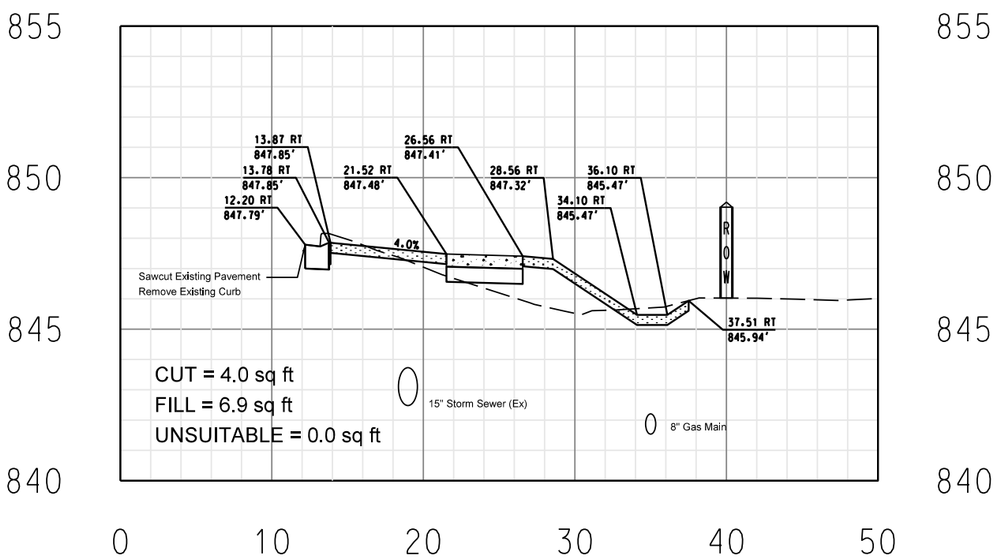

128+05.00

LEGEND

- 2.5" HMA PAVEMENT MIX "D" N50
- 6" PCC DRIVEWAY PAVEMENT
- TOPSOIL, FURNISH & PLACE 4"
- 5" PCC SIDEWALK
- 6" AGGREGATE BASE COURSE, TYPE A

REVISIONS / REMARKS			
NO.	DESCRIPTION	DATE	BY
		/ /	
		/ /	

SURVEYOR:
DSGNR/LIAISON:
PLOTTED BY: hdrmc 2/18/206

LakeCounty
Division of Transportation

ELA ROAD RESURFACING

CROSS SECTIONS STA. 128+05.00 TO STA. 128+15.00

ROUTE	SECTION	SECTION NUMBER	SHEET	SHEETS
CH60	144	15-00144-21-RS	80	150

FILE NAME: U:\Design\Sullivan\Elo Rd Sidewalk\Eloro Cross Sections.dgn

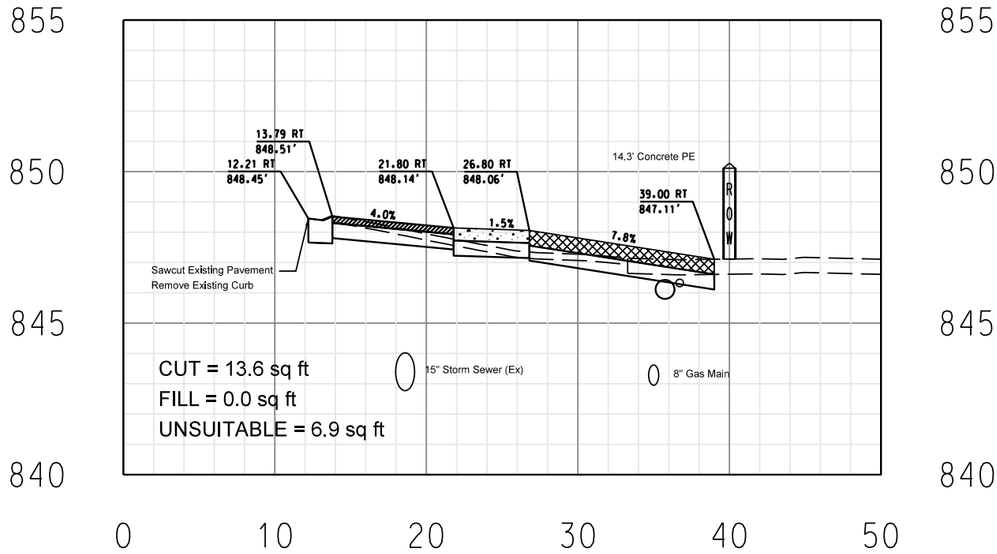

128+31.50

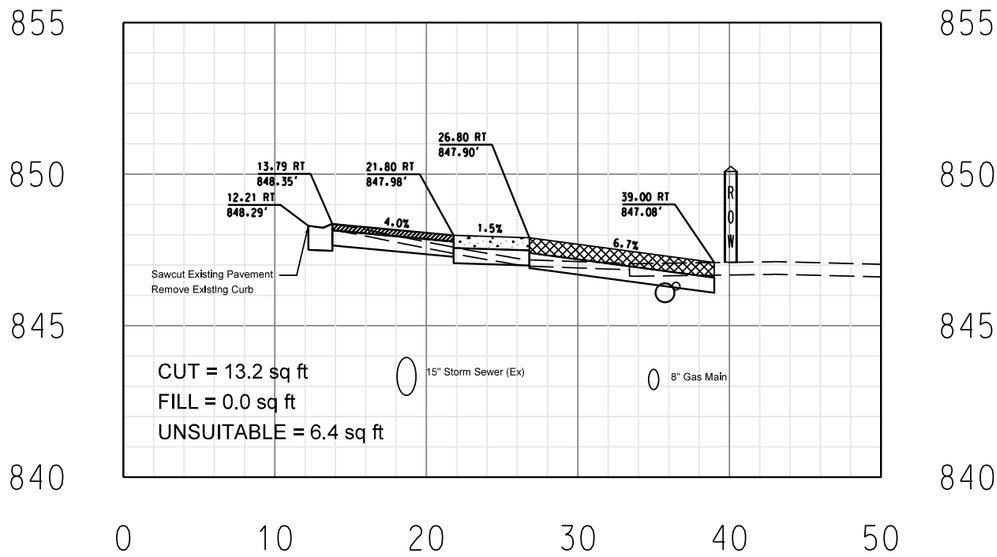

128+25.00

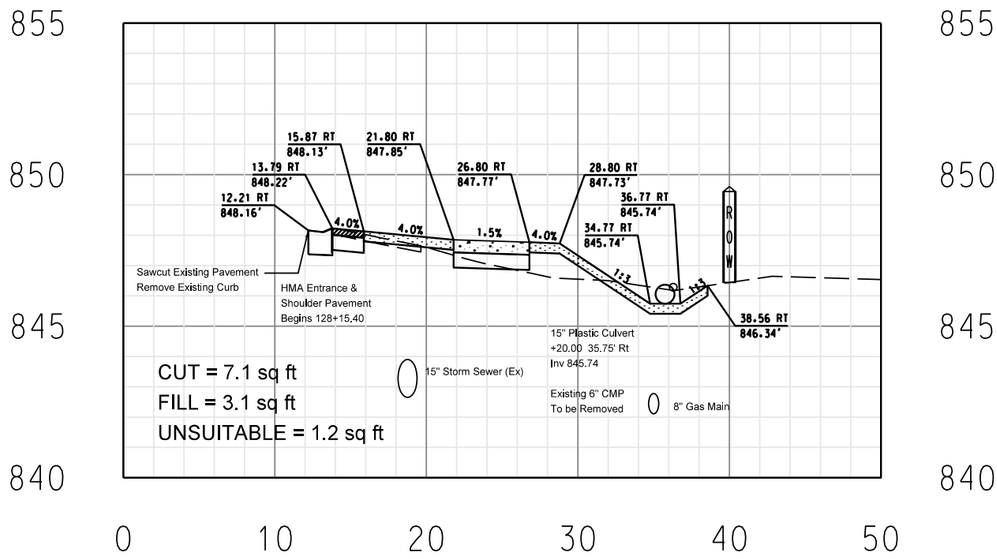

128+20.00

LEGEND

- 2.5" HMA PAVEMENT MIX "D" N50
- 6" PCC DRIVEWAY PAVEMENT
- TOPSOIL, FURNISH & PLACE 4"
- 5" PCC SIDEWALK
- 6" AGGREGATE BASE COURSE, TYPE A

REVISIONS / REMARKS			
NO.	DESCRIPTION	DATE	BY
		/ /	
		/ /	

SURVEYOR:
DSGNR/LIAISON:
PLOTTED BY: hdrmc 2/18/206

LakeCounty
Division of Transportation

ELA ROAD RESURFACING

CROSS SECTIONS STA. 128+20.00 TO STA. 128+31.50

ROUTE	SECTION	SECTION NUMBER	SHEET	SHEETS
CH60	144	15-00144-21-RS	81	150

FILE NAME: U:\Design\Sullivan\Elo Rd Sidewalk\Eldrd Cross Sections.dgn

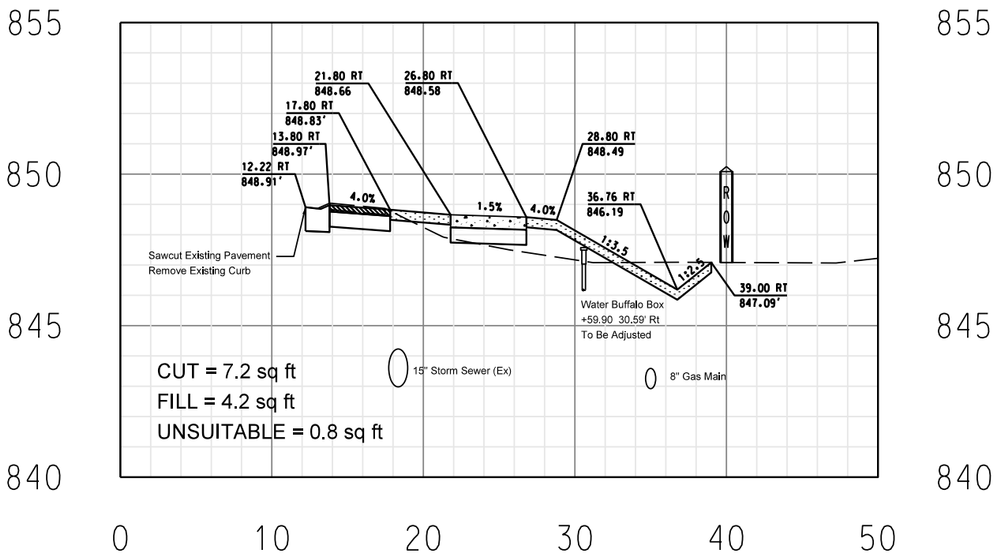

128+50.00

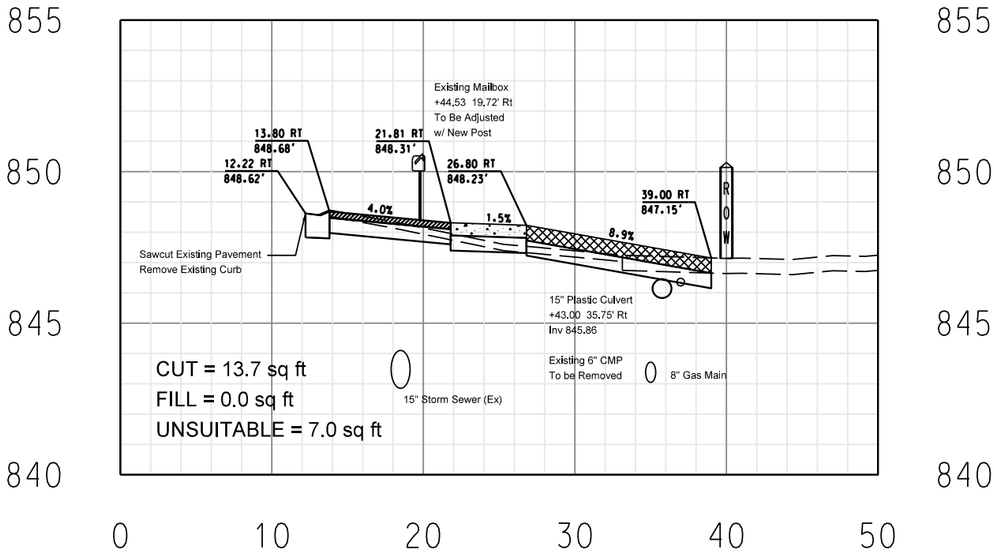

128+38.40

LEGEND

- 2.5" HMA PAVEMENT MIX "D" N50
- 6" PCC DRIVEWAY PAVEMENT
- TOPSOIL, FURNISH & PLACE 4"
- 5" PCC SIDEWALK
- 6" AGGREGATE BASE COURSE, TYPE A

REVISIONS / REMARKS			
NO.	DESCRIPTION	DATE	BY
		/ /	
		/ /	

SURVEYOR:
DSGNR/LIAISON:
PLOTTED BY: hdrmc 2/18/2016

LakeCounty
Division of Transportation

ELA ROAD RESURFACING

CROSS SECTIONS STA. 128+38.40 TO STA. 128+50.00

ROUTE	SECTION	SECTION NUMBER	SHEET	SHEETS
CH60	144	15-00144-21-RS	82	150

FILE NAME: U:\Design\Sullivan\Elo Rd Sidewalk\Eloiad Cross Sections.dgn

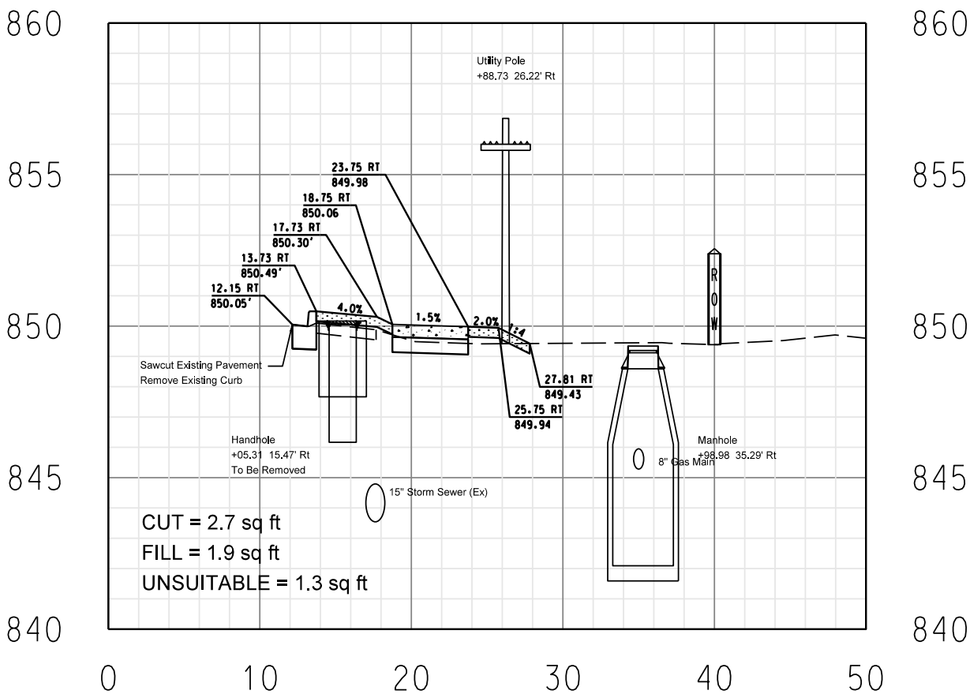

129+00.00

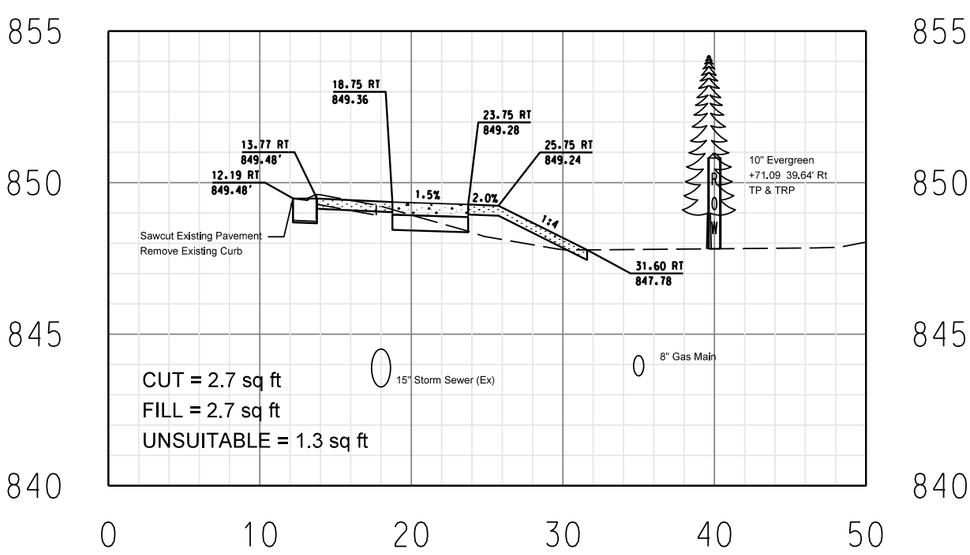

128+75.00

LEGEND

- 2.5" HMA PAVEMENT MIX "D" N50
- 6" PCC DRIVEWAY PAVEMENT
- TOPSOIL, FURNISH & PLACE 4"
- 5" PCC SIDEWALK
- 6" AGGREGATE BASE COURSE, TYPE A

REVISIONS / REMARKS			
NO.	DESCRIPTION	DATE	BY
		/ /	
		/ /	

SURVEYOR:
DSGNR/LIAISON:
PLOTTED BY: hdrmc 2/18/2016

LakeCounty
Division of Transportation

ELA ROAD RESURFACING
CROSS SECTIONS STA. 128+75.00 TO STA. 129+00.00

ROUTE	SECTION	SECTION NUMBER	SHEET	SHEETS
CH60	144	15-00144-21-RS	83	150

FILE NAME: U:\Design\Sullivan\Elo Rd Sidewalk\Eldrd Cross Sections.dgn

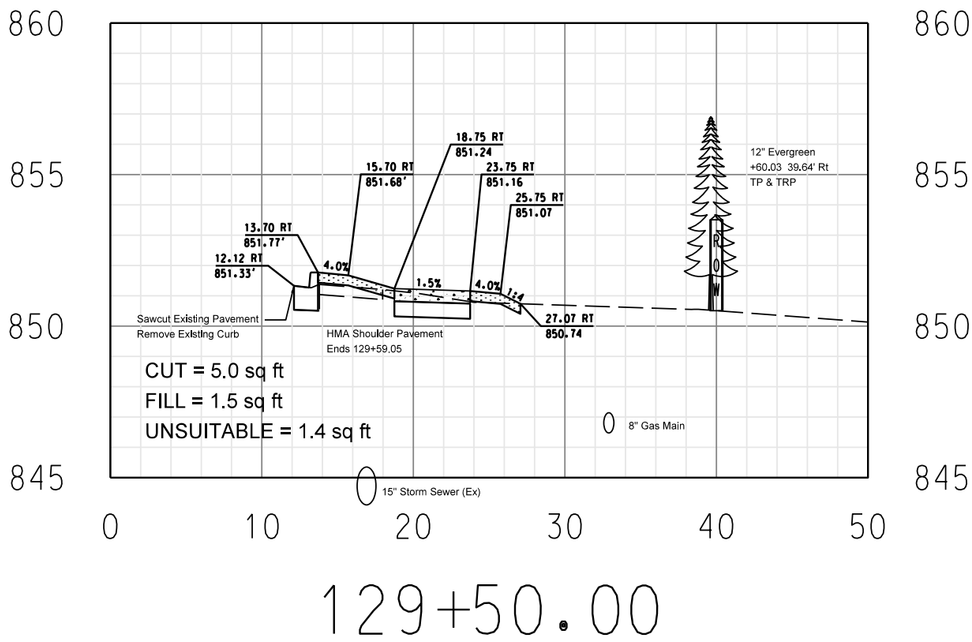

129+50.00

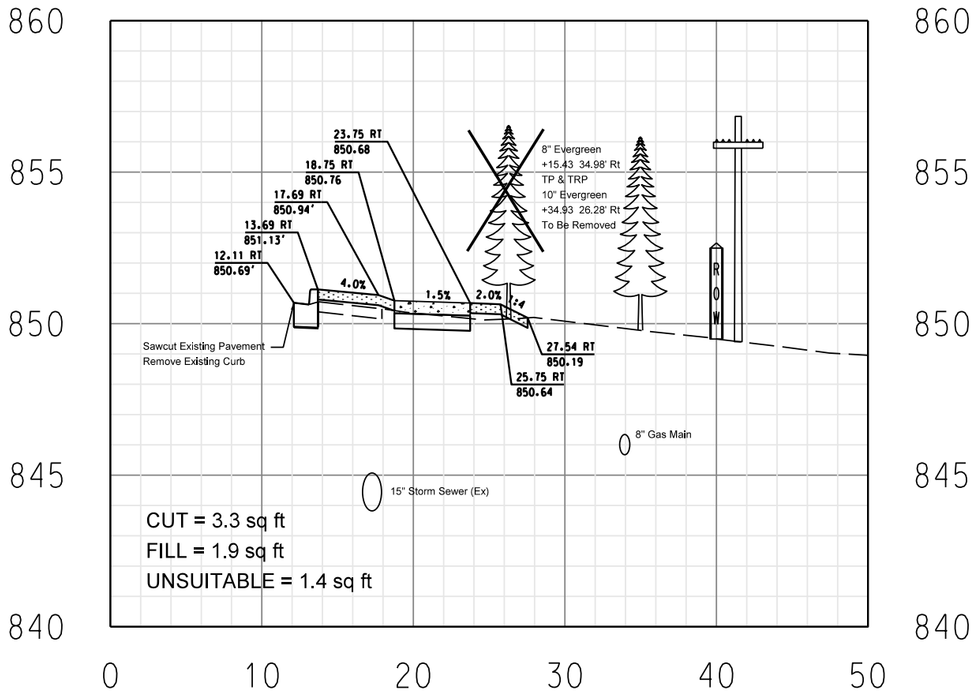

129+25.00

LEGEND

- 2.5" HMA PAVEMENT MIX "D" N50
- 6" PCC DRIVEWAY PAVEMENT
- TOPSOIL, FURNISH & PLACE 4"
- 5" PCC SIDEWALK
- 6" AGGREGATE BASE COURSE, TYPE A

NO.	REVISIONS / REMARKS DESCRIPTION	DATE	BY
		/ /	
		/ /	

SURVEYOR:
DSGNR/LIAISON:
PLOTTED BY: hdrmc 2/18/2016

LakeCounty
Division of Transportation

ELA ROAD RESURFACING

CROSS SECTIONS STA. 129+25.00 TO STA. 129+50.00

ROUTE	SECTION	SECTION NUMBER	SHEET	SHEETS
CH60	144	15-00144-21-RS	84	150

FILE NAME: U:\Design\Sullivan\Elo Rd Sidewalk\Eldrd Cross Sections.dgn

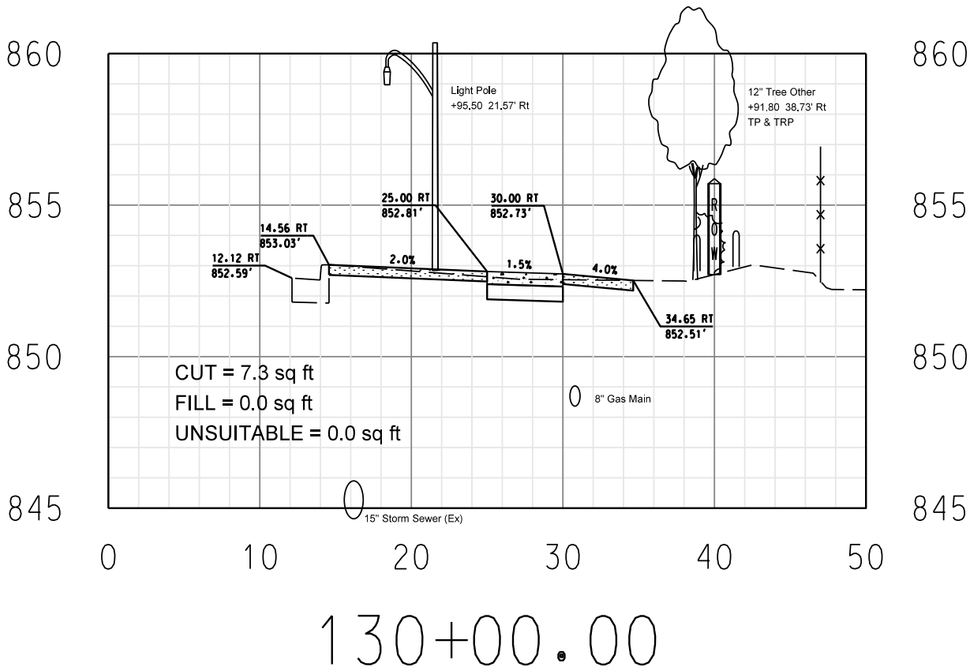

130+00.00

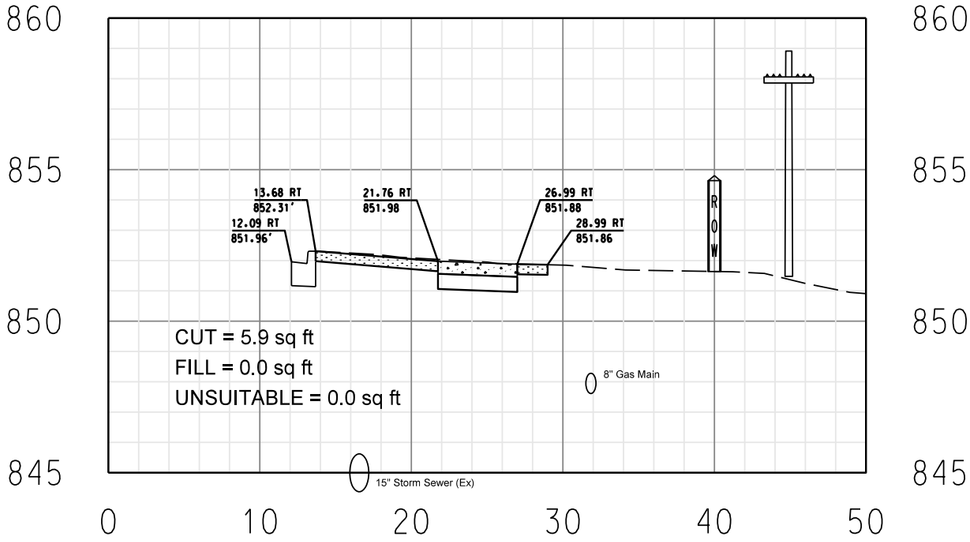

129+75.00

LEGEND

- 2.5" HMA PAVEMENT MIX "D" N50
- 6" PCC DRIVEWAY PAVEMENT
- TOPSOIL, FURNISH & PLACE 4"
- 5" PCC SIDEWALK
- 6" AGGREGATE BASE COURSE, TYPE A

REVISIONS / REMARKS

NO.	DESCRIPTION	DATE	BY
		/ /	
		/ /	

SURVEYOR:
DSGNR/LIAISON:
PLOTTED BY: hdrmc 2/18/2016

LakeCounty
Division of Transportation

ELA ROAD RESURFACING

CROSS SECTIONS STA. 129+75.00 TO STA. 130+00.00

ROUTE	SECTION	SECTION NUMBER	SHEET	SHEETS
CH60	144	15-00144-21-RS	85	150

FILE NAME: U:\Design\Sullivan\Ela Rd Sidewalk\Eland Cross Sections.dgn

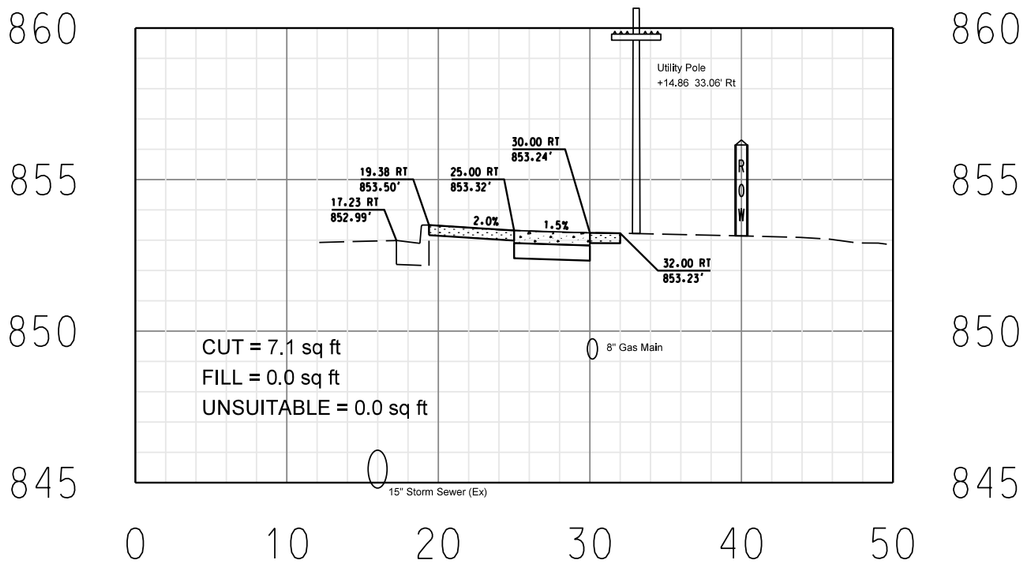

130+15.00

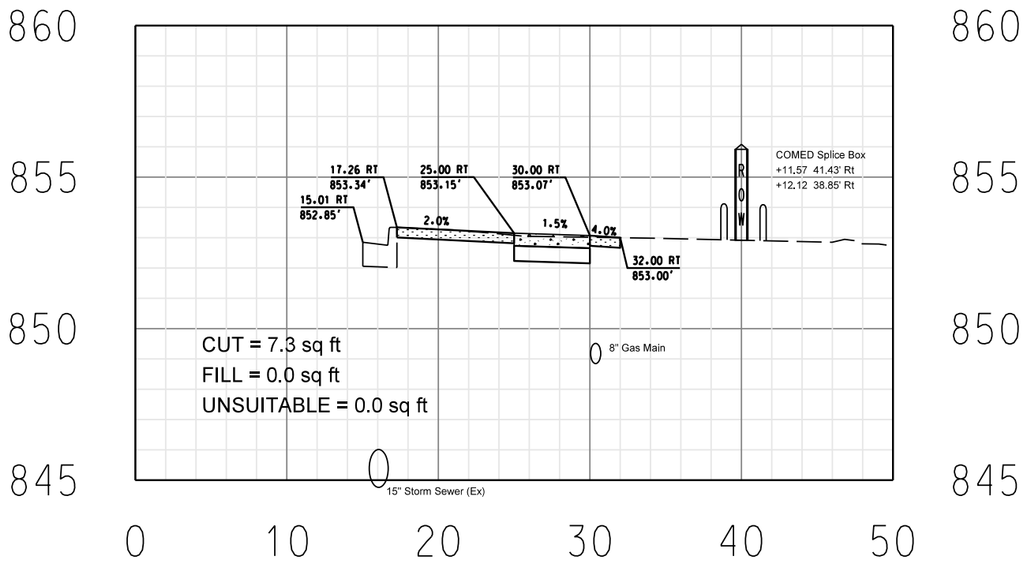

130+10.00

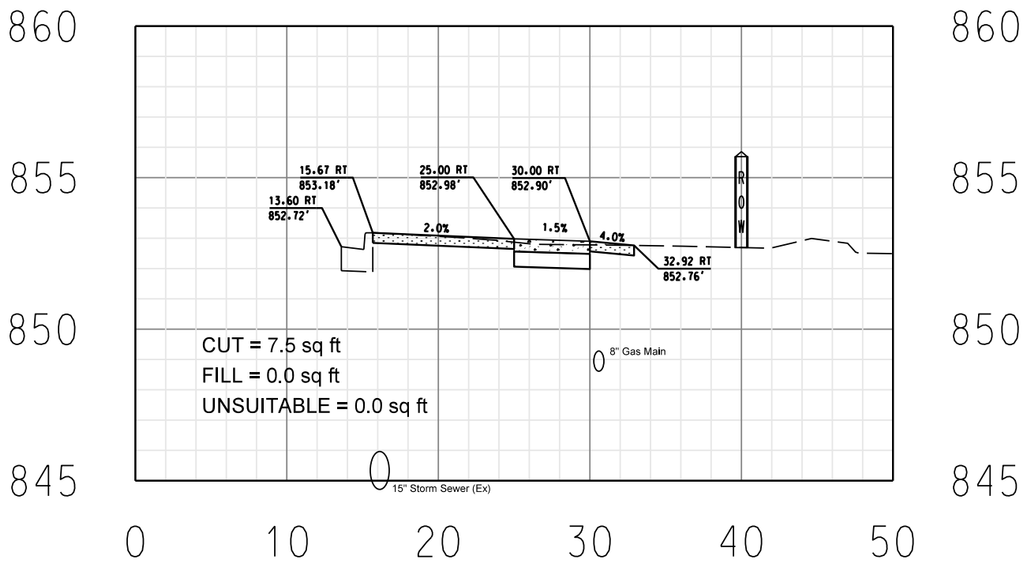

130+05.00

LEGEND

- 2.5" HMA PAVEMENT MIX "D" N50
- 6" PCC DRIVEWAY PAVEMENT
- TOPSOIL, FURNISH & PLACE 4"
- 5" PCC SIDEWALK
- 6" AGGREGATE BASE COURSE, TYPE A

REVISIONS / REMARKS			
NO.	DESCRIPTION	DATE	BY
		/ /	
		/ /	

SURVEYOR:
DSGNR/LIAISON:
PLOTTED BY: hdrmc 2/18/206

LakeCounty
Division of Transportation

ELA ROAD RESURFACING
CROSS SECTIONS STA. 130+05.00 TO STA. 130+15.00

ROUTE	SECTION	SECTION NUMBER	SHEET	SHEETS
CH60	144	15-00144-21-RS	86	150

FILE NAME: U:\Design\Sullivan\Elo Rd Sidewalk\Eloro Cross Sections.dgn

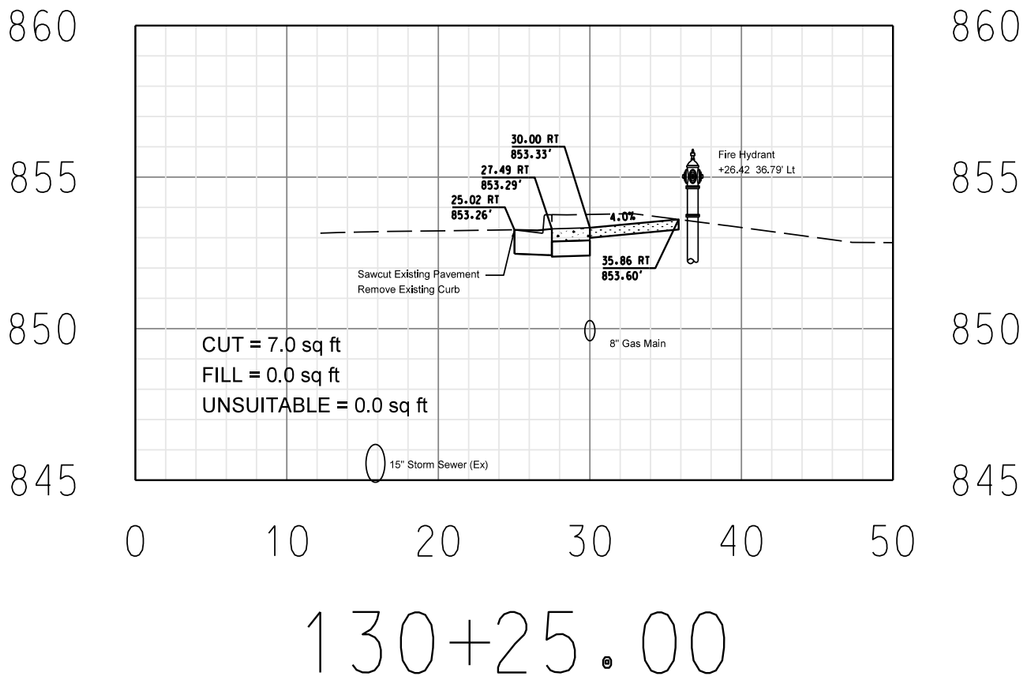

130+25.00

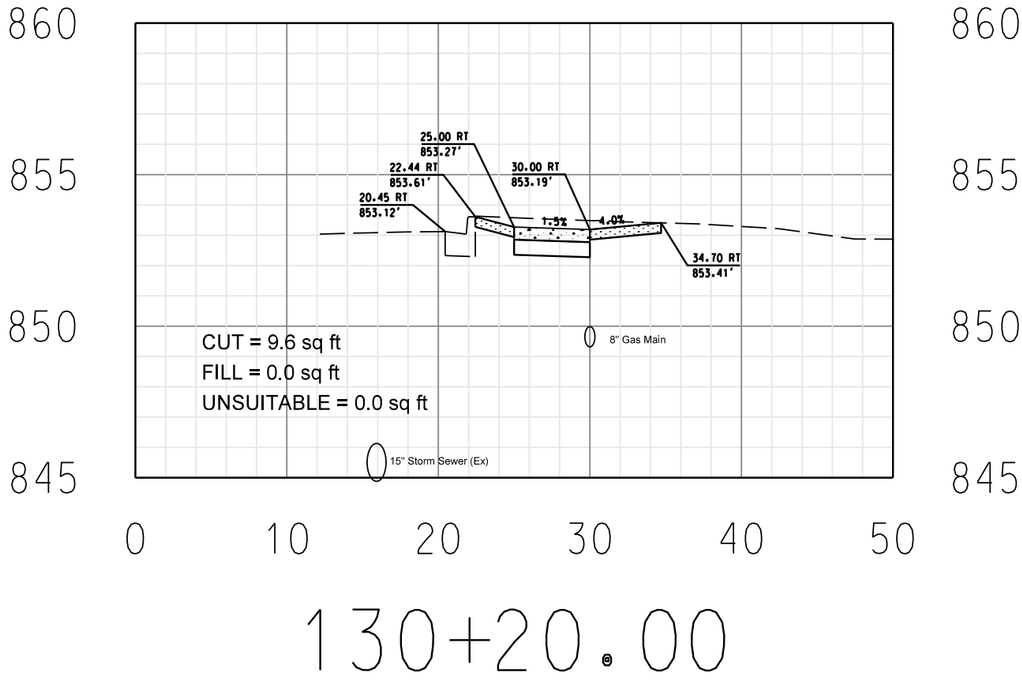

130+20.00

LEGEND

- 2.5" HMA PAVEMENT MIX "D" N50
- 6" PCC DRIVEWAY PAVEMENT
- TOPSOIL, FURNISH & PLACE 4"
- 5" PCC SIDEWALK
- 6" AGGREGATE BASE COURSE, TYPE A

REVISIONS / REMARKS			
NO.	DESCRIPTION	DATE	BY
		/ /	
		/ /	

SURVEYOR:
DSGNR/LIAISON:
PLOTTED BY: hdrmc 2/18/2016

LakeCounty
Division of Transportation

ELA ROAD RESURFACING

CROSS SECTIONS STA. 130+20.00 TO STA. 130+25.00

ROUTE	SECTION	SECTION NUMBER	SHEET	SHEETS
CH60	144	15-00144-21-RS	87	150

FILE NAME: U:\Design\Sullivan\Elo Rd Sidewalk\Eldrd Cross Sections.dgn

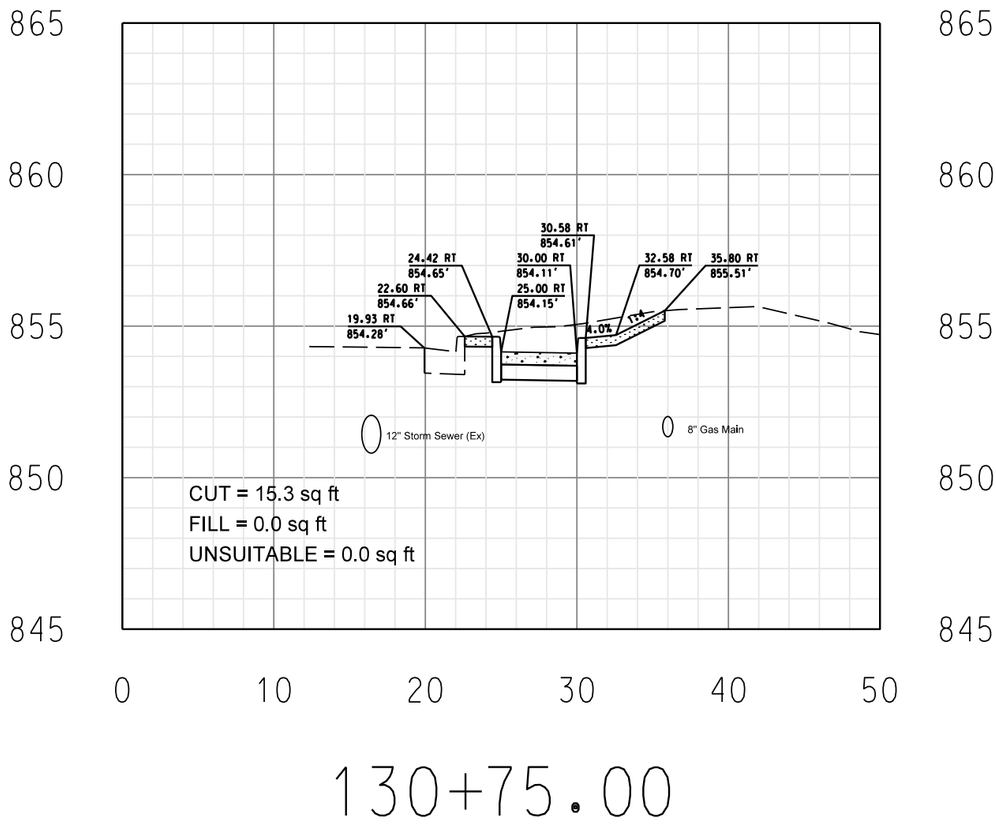

130+75.00

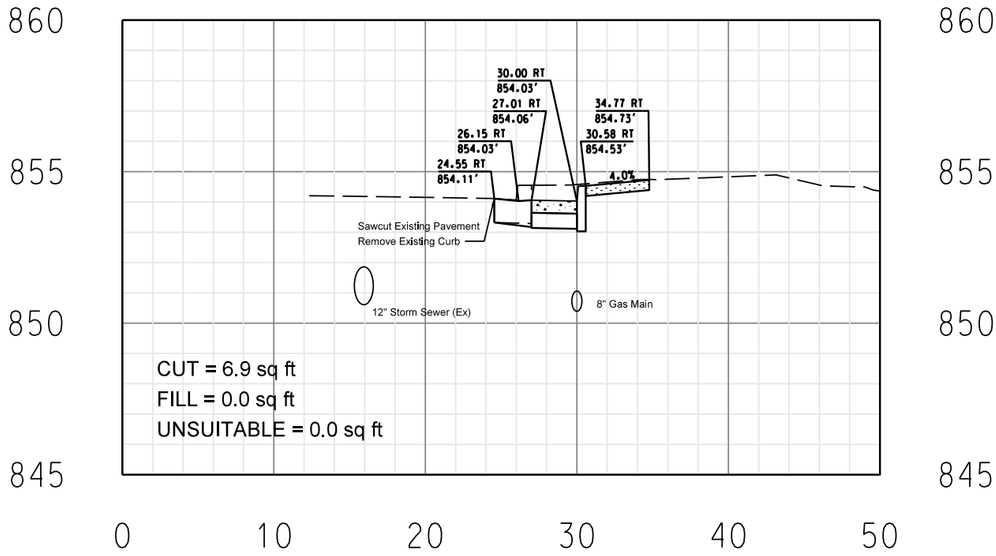

130+70.00

LEGEND

- 2.5" HMA PAVEMENT MIX "D" N50
- 6" PCC DRIVEWAY PAVEMENT
- TOPSOIL, FURNISH & PLACE 4"
- 5" PCC SIDEWALK
- 6" AGGREGATE BASE COURSE, TYPE A

REVISIONS / REMARKS			
NO.	DESCRIPTION	DATE	BY
		/ /	
		/ /	

SURVEYOR:
DSGNR/LIAISON:
PLOTTED BY: hdrmc 2/18/2016

LakeCounty
Division of Transportation

ELA ROAD RESURFACING

CROSS SECTIONS STA. 130+70.00 TO STA. 130+75.00

ROUTE	SECTION	SECTION NUMBER	SHEET	SHEETS
CH60	144	15-00144-21-RS	88	150

FILE NAME: U:\Design\Sullivan\Elo Rd Sidewalk\Eloro Cross Sections.dgn

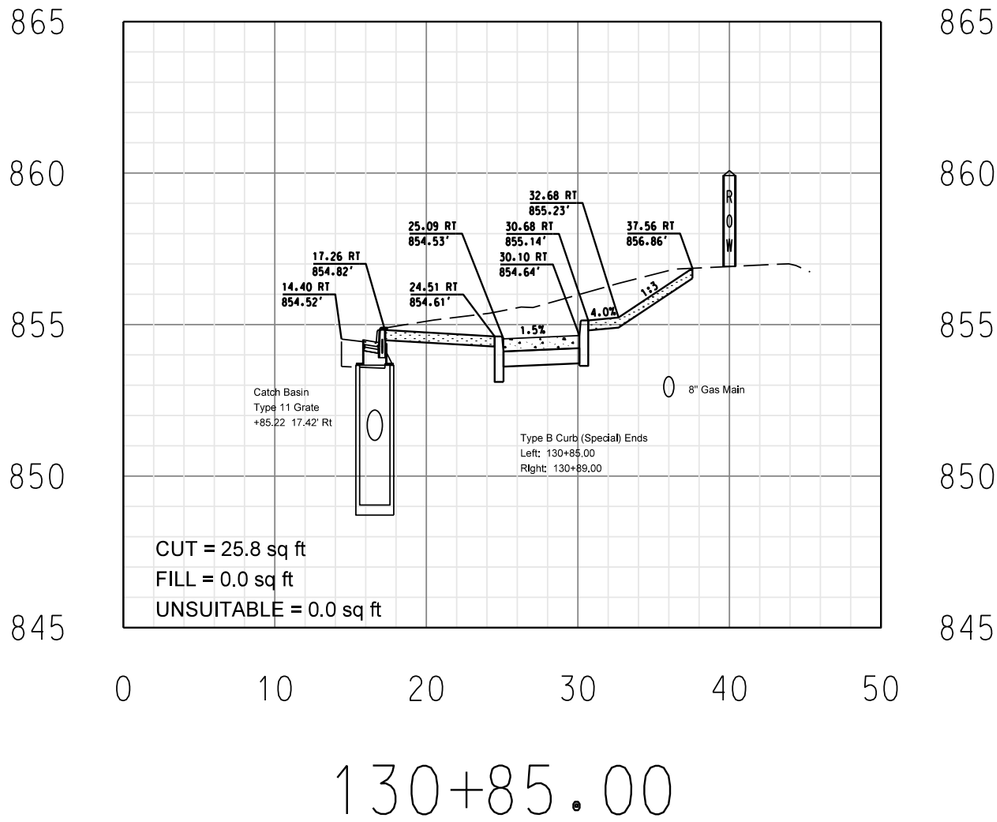

130+85.00

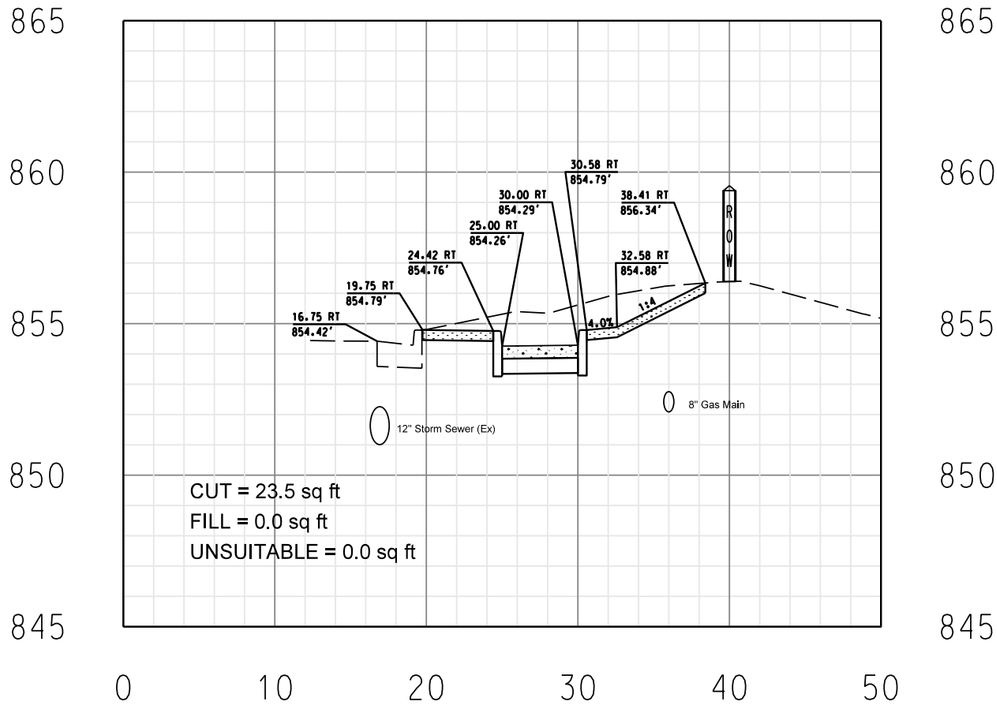

130+80.00

LEGEND

- 2.5" HMA PAVEMENT MIX "D" N50
- 6" PCC DRIVEWAY PAVEMENT
- TOPSOIL, FURNISH & PLACE 4"
- 5" PCC SIDEWALK
- 6" AGGREGATE BASE COURSE, TYPE A

REVISIONS / REMARKS			
NO.	DESCRIPTION	DATE	BY
		/ /	
		/ /	

SURVEYOR:
DSGNR/LIAISON:
PLOTTED BY: hdrmc 2/18/2016

LakeCounty
Division of Transportation

ELA ROAD RESURFACING

CROSS SECTIONS STA. 130+80.00 TO STA. 130+85.00

ROUTE	SECTION	SECTION NUMBER	SHEET	SHEETS
CH60	144	15-00144-21-RS	89	150

FILE NAME: U:\Design\Sullivan\Eto Rd Sidewalk\Eldrd Cross Sections.dgn

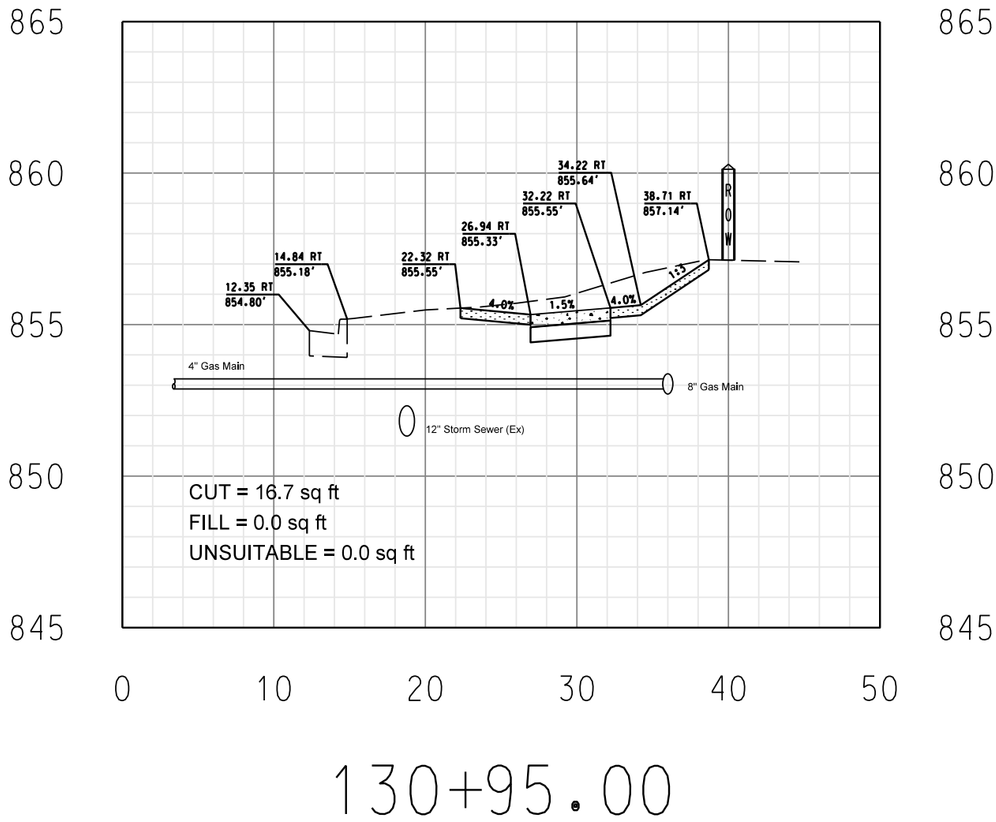

130+95.00

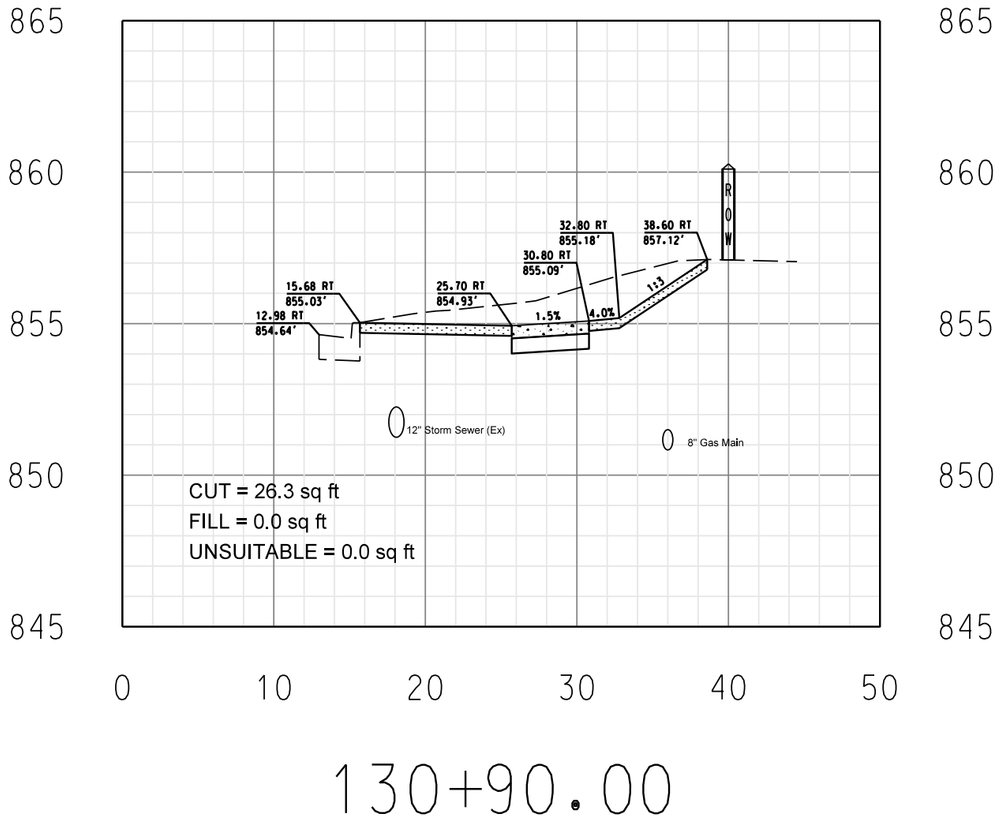

130+90.00

LEGEND

- 2.5" HMA PAVEMENT MIX "D" N50
- 6" PCC DRIVEWAY PAVEMENT
- TOPSOIL, FURNISH & PLACE 4"
- 5" PCC SIDEWALK
- 6" AGGREGATE BASE COURSE, TYPE A

REVISIONS / REMARKS			
NO.	DESCRIPTION	DATE	BY
		/ /	
		/ /	

SURVEYOR:
DSGNR/LIAISON:
PLOTTED BY: hdrmc 2/18/2016

LakeCounty
Division of Transportation

ELA ROAD RESURFACING

CROSS SECTIONS STA. 130+90.00 TO STA. 130+95.00

ROUTE	SECTION	SECTION NUMBER	SHEET	SHEETS
CH60	144	15-00144-21-RS	90	150

FILE NAME: U:\Design\Sullivan\Elo Rd Sidewalk\Eldrd Cross Sections.dgn

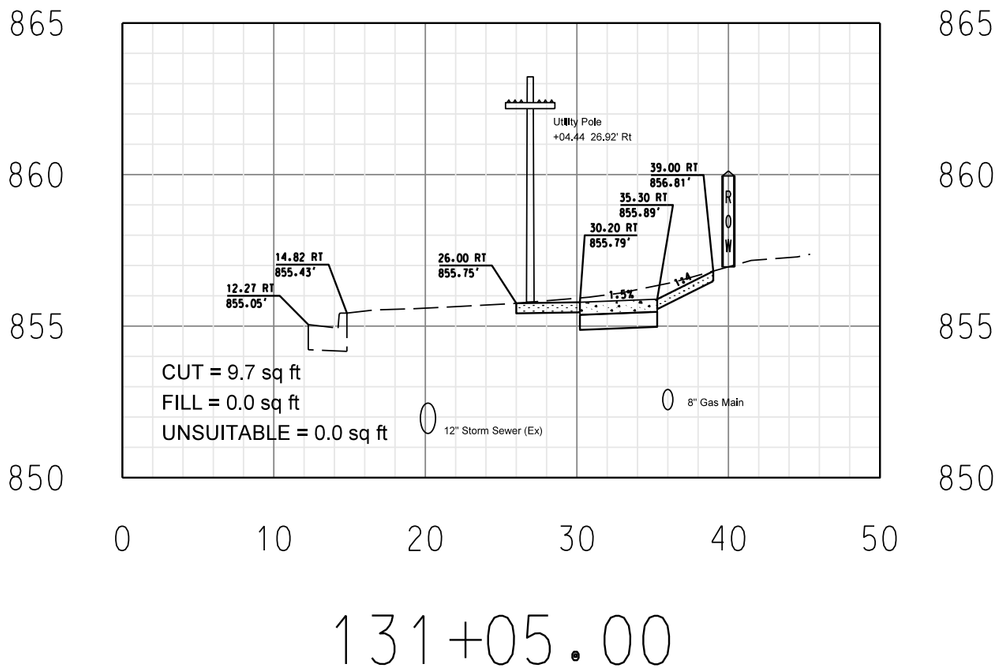

131+05.00

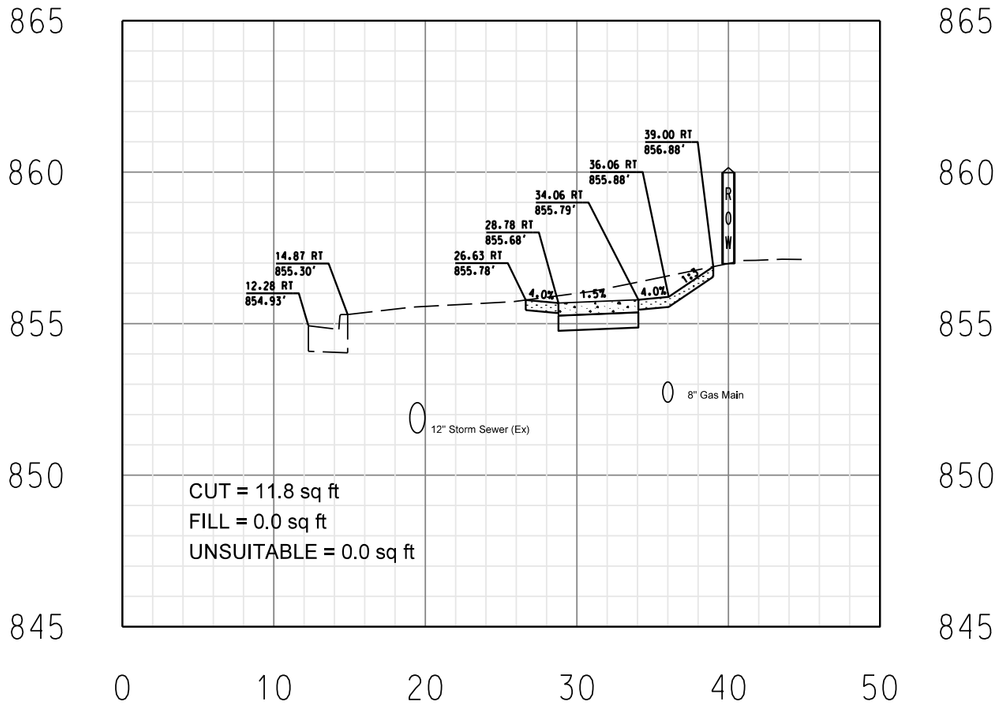

131+00.00

LEGEND

- 2.5" HMA PAVEMENT MIX "D" N50
- 6" PCC DRIVEWAY PAVEMENT
- TOPSOIL, FURNISH & PLACE 4"
- 5" PCC SIDEWALK
- 6" AGGREGATE BASE COURSE, TYPE A

LakeCounty
Division of Transportation

ELA ROAD RESURFACING

CROSS SECTIONS STA. 131+00.00 TO STA. 131+05.00

ROUTE	SECTION	SECTION NUMBER	SHEET	SHEETS
CH60	144	15-00144-21-RS	91	150

REVISIONS / REMARKS			
NO.	DESCRIPTION	DATE	BY
		/ /	
		/ /	

SURVEYOR:
DSGNR/LIAISON:
PLOTTED BY: hdrmc 2/18/2016

FILE NAME: U:\Design\Sullivan\Elo Rd Sidewalk\Eloro Cross Sections.dgn

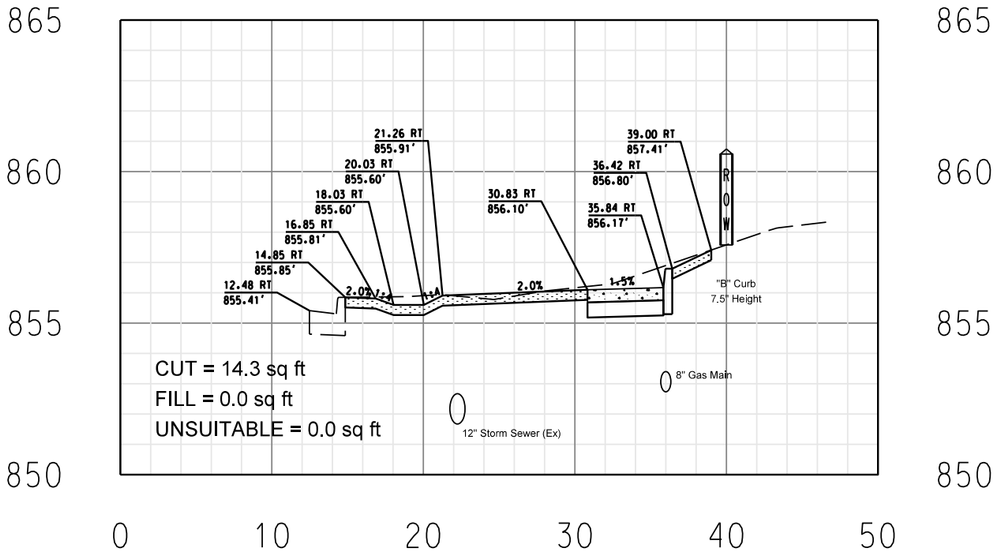

131+20.00

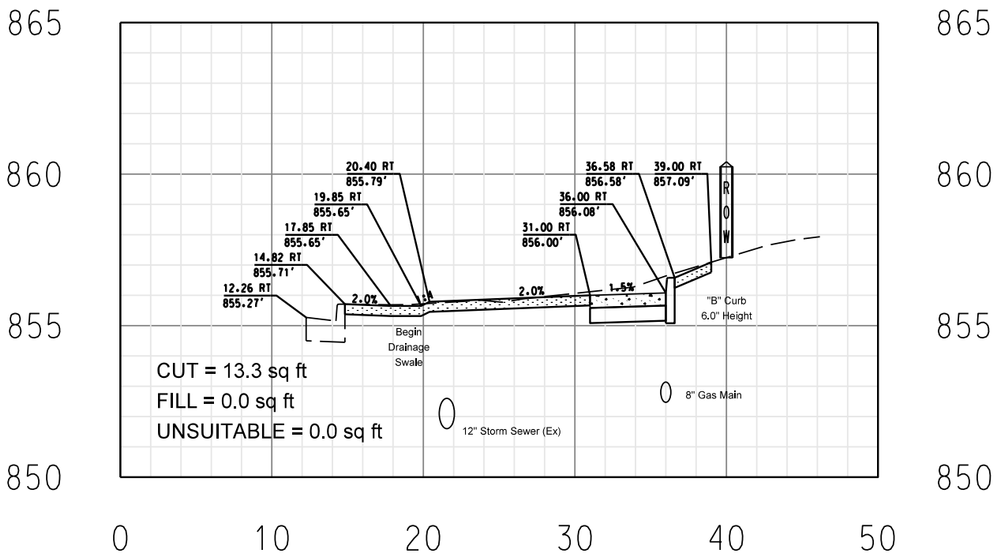

131+15.00

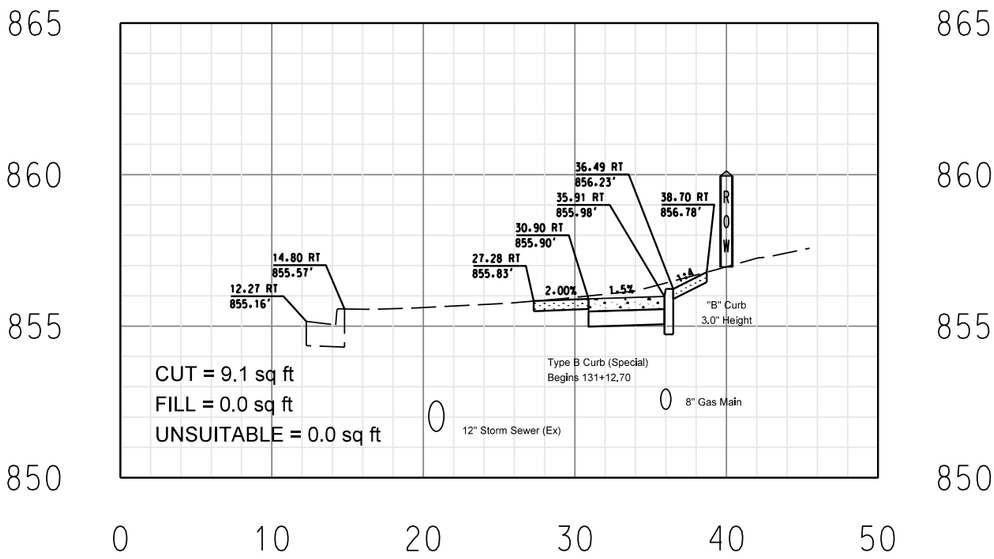

131+10.00

LEGEND

- 2.5" HMA PAVEMENT MIX "D" N50
- 6" PCC DRIVEWAY PAVEMENT
- TOPSOIL, FURNISH & PLACE 4"
- 5" PCC SIDEWALK
- 6" AGGREGATE BASE COURSE, TYPE A

REVISIONS / REMARKS			
NO.	DESCRIPTION	DATE	BY
		/ /	
		/ /	

SURVEYOR:
DSGNR/LIAISON:
PLOTTED BY: hdrmc 2/18/2016

LakeCounty
Division of Transportation

ELA ROAD RESURFACING

CROSS SECTIONS STA. 131+10.00 TO STA. 131+20.00

ROUTE	SECTION	SECTION NUMBER	SHEET	SHEETS
CH60	144	15-00144-21-RS	92	150

FILE NAME: U:\Design\Sullivan\Elo Rd Sidewalk\Eloard Cross Sections.dgn

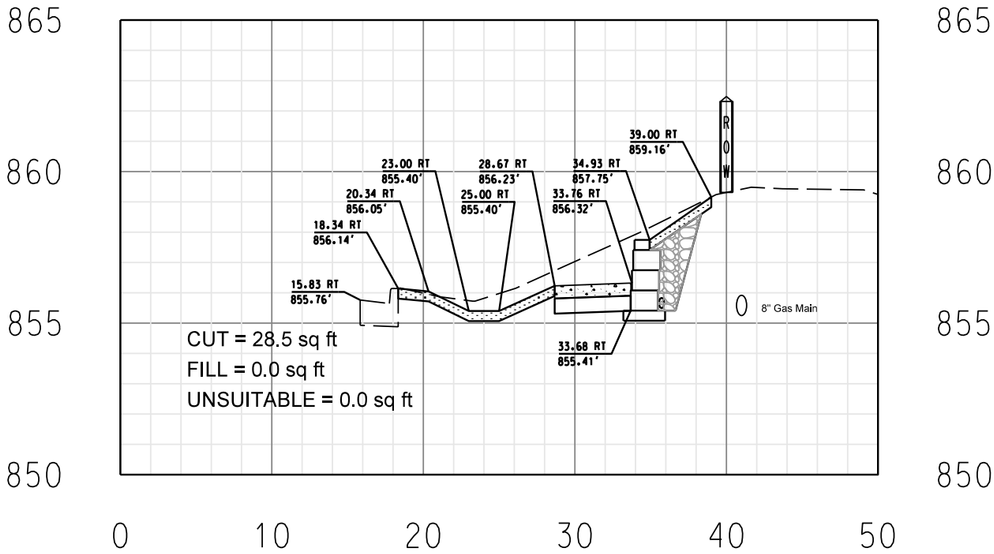

131+35.00

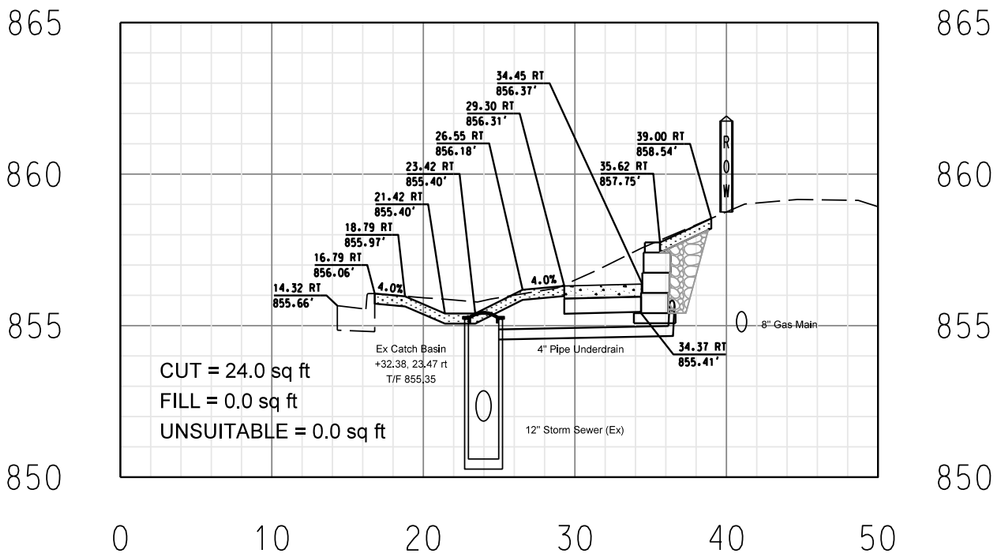

131+30.00

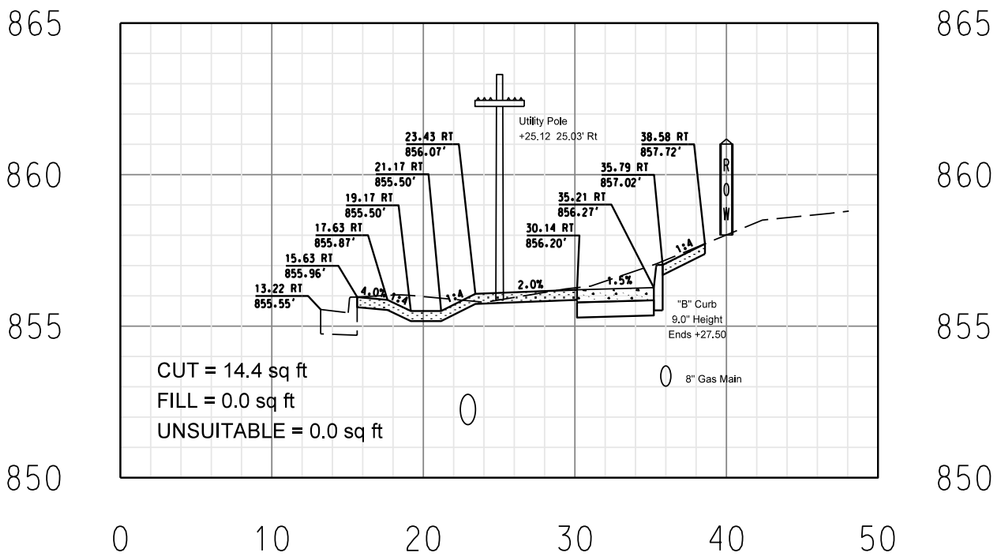

131+25.00

LEGEND

- 2.5" HMA PAVEMENT MIX "D" N50
- 6" PCC DRIVEWAY PAVEMENT
- TOPSOIL, FURNISH & PLACE 4"
- 5" PCC SIDEWALK
- 6" AGGREGATE BASE COURSE, TYPE A
- SELECT GRANULAR BACKFILL

NO.	REVISIONS / REMARKS DESCRIPTION	DATE	BY
		/ /	
		/ /	

SURVEYOR:
DSGNR/LIAISON:
PLOTTED BY: hdrmc 2/18/206

LakeCounty
Division of Transportation

ELA ROAD RESURFACING

CROSS SECTIONS STA. 131+25.00 TO STA. 131+35.00

ROUTE	SECTION	SECTION NUMBER	SHEET	SHEETS
CH60	144	15-00144-21-RS	93	150

FILE NAME: U:\Design\Sullivan\Elo Rd Sidewalk\Eldrd Cross Sections.dgn

131+50.00

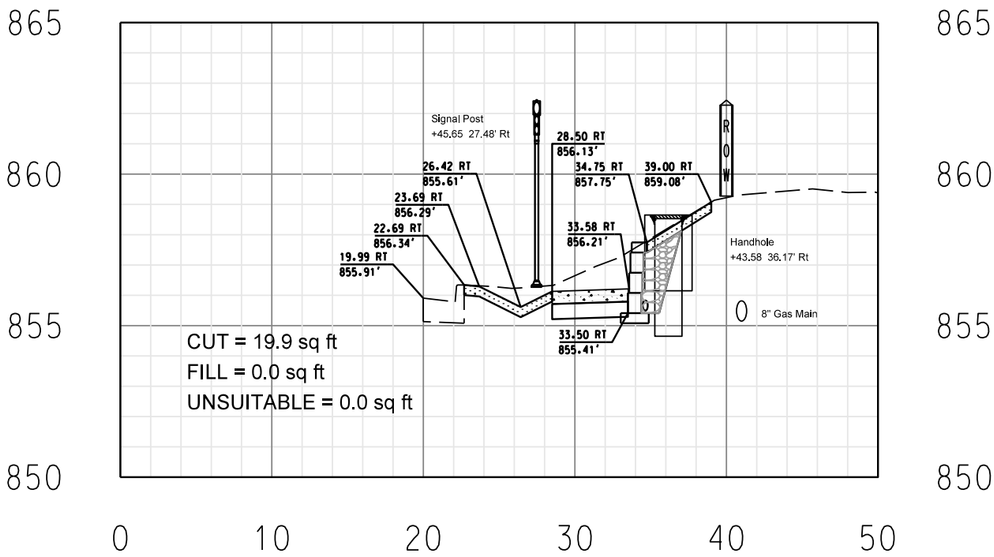

131+45.00

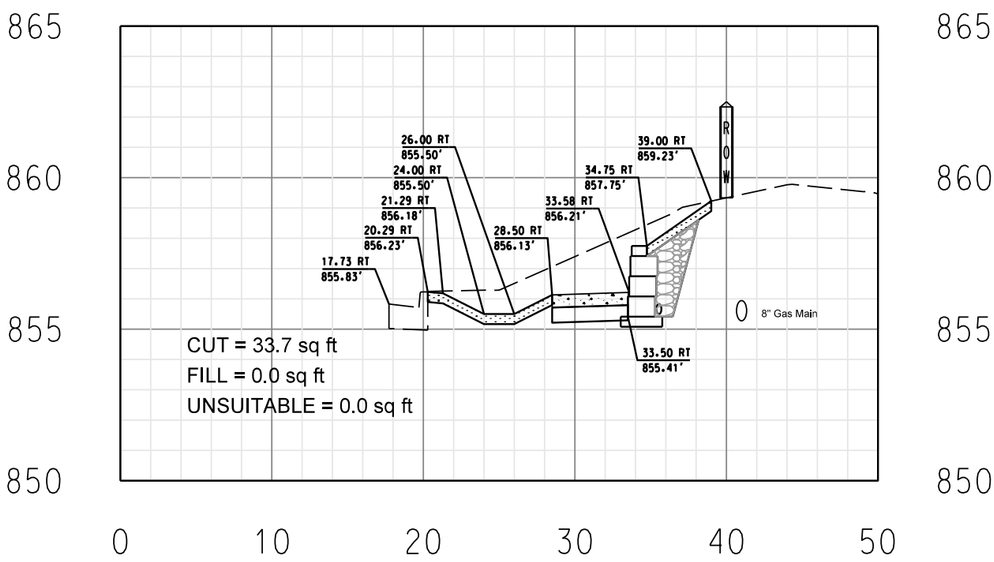

131+40.00

LEGEND

- 2.5" HMA PAVEMENT MIX "D" N50
- 6" PCC DRIVEWAY PAVEMENT
- TOPSOIL, FURNISH & PLACE 4"
- 5" PCC SIDEWALK
- 6" AGGREGATE BASE COURSE, TYPE A
- SELECT GRANULAR BACKFILL

NO.	REVISIONS / REMARKS DESCRIPTION	DATE	BY
		/ /	SURVEYOR:
		/ /	DSGNR/LIAISON:
			PLOTTED BY:
		hdrmc 2/18/206	/

FILE NAME: U:\Design\Sullivan\Eto Rd Sidewalk\Eland Cross Sections.dgn

LakeCounty
Division of Transportation

ELA ROAD RESURFACING

CROSS SECTIONS STA. 131+40.00 TO STA. 131+50.00

ROUTE	SECTION	SECTION NUMBER	SHEET	SHEETS
CH60	144	15-00144-21-RS	94	150

ENGLISH		TRENCH WIDTH (W)		MIN OFFSET FROM E.O.P.* FOR NO TB		½ PIPE AREA [O.D.]
S.S. DIA.	T	WITHOUT SHORING	WITH SHORING	WITHOUT SHORING	WITH SHORING	
(IN)	(IN)	(FT)	(FT)	(FT)	(FT)	(SQ FT)
10	2.00	2.67	4.17	3.33	4.08	0.53
12	2.00	2.83	4.33	3.42	4.17	0.70
15	2.25	3.13	4.63	3.56	4.31	1.04
18	2.50	3.42	4.92	3.71	4.46	1.44
21	2.75	3.71	5.21	3.85	4.60	1.92
24	3.00	4.00	5.50	4.00	4.75	2.45
27	3.25	4.29	5.79	4.15	4.90	3.06
30	3.50	4.58	6.08	4.29	5.04	3.73
36	4.00	5.17	6.67	4.58	5.33	5.28
42	4.50	5.75	7.25	4.88	5.63	7.09
48	5.00	6.33	7.83	5.17	5.92	9.17

* TO CENTER LINE OF PIPE

DESIGN NOTES:

1. Trench backfill is required if the storm sewer or culvert offset from the edge of the pavement is less than the tabulated values (the inner trench wall is closer than 2' to the edge of pavement)
2. Payment for the trench backfill shall not exceed the quantity computed using the maximum trench width dimensions. If the trench is excavated beyond these limits, the contractor shall furnish and place any additional trench backfill at his/her expense.
3. If the trench width is less than the above maximum values, payment will be based on the actual dimensions of the dug trench.
4. Bedding shall be placed from 4" under the pipe to the spring line of the pipe and is incidental to the corresponding storm sewer or culvert pay item.
5. If any part of the excavation for a drainage structure falls within 2' of the edge of pavement, the space between the side of the excavation and the outer surface of the drainage structure shall be filled with trench backfill. The cost of this item is included in the pay item for the drainage structure.

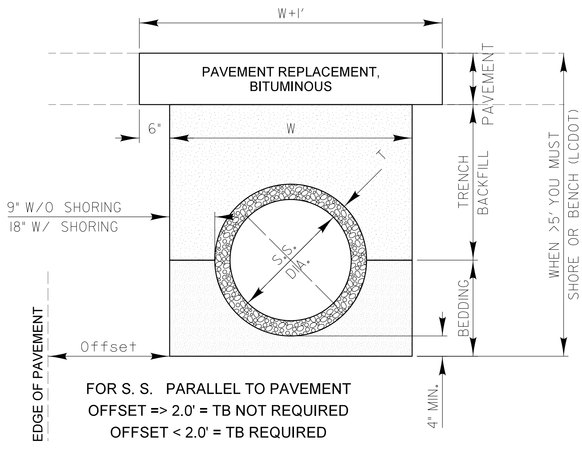

SCALE: 1" = 2'

REVISIONS	DATE
Text Revision	11/06/07
Text Update	7/14/11

LakeCounty Division of Transportation

APPROVED BY: M. G. ZEMAITIS
DATE: APRIL 1, 2007

TRENCH WIDTHS FOR TRENCH BACKFILL & PAVEMENT REPLACEMENT, BITUMINOUS

LC0020

FOR USE WHILE ESTABLISHING FINAL LANDSCAPING

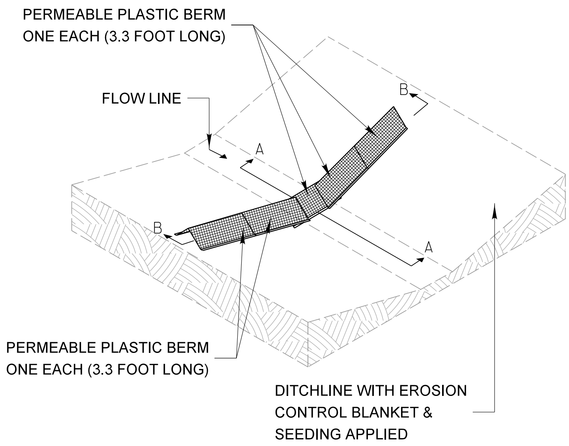

PERMEABLE PLASTIC BERM
ISOMETRIC

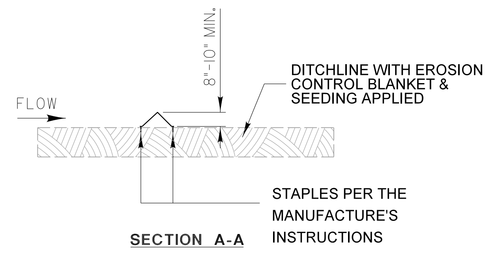

SECTION A-A

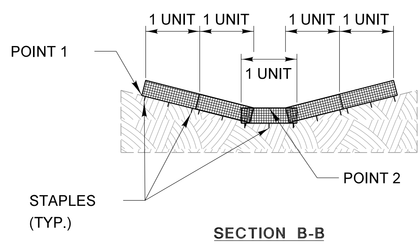

SECTION B-B

NOTES:
THE PERMEABLE PLASTIC BERM SHALL REPLACE THE TEMPORARY DITCH CHECK AFTER THE INSTALLATION OF EROSION CONTROL BLANKET AND SEEDING.

EACH PERMEABLE PLASTIC BERM IS 3.3 FEET IN LENGTH. THE MINIMUM INSTALLATION IN A DITCH SHALL BE THREE UNITS. THE INSTALLATION SHOWN WILL BE MEASURED AND PAID FOR AS A PERMEABLE PLASTIC BERM 16.5 FEET IN LENGTH (5 UNITS).

STAPLES SHALL BE PLACED WHERE THE UNITS OVERLAP AND ACCORDING TO THE MANUFACTURER'S INSTALLATION INSTRUCTIONS.

POINT 1 MUST BE HIGHER THAN POINT 2 TO INSURE THAT WATER FLOWS THROUGH OR OVER THE BERM AND NOT AROUND THE ENDS.

REVISIONS	DATE
ADDED DIMENSIONS	04/11/08
REVISED PAY ITEM	04/15/10
ADDED PLASTIC BERM (pg2)	10/10/12

LakeCounty Division of Transportation

APPROVED BY: M. G. ZEMAITIS
DATE: APRIL 1, 2007

TEMPORARY DITCH CHECK INSTALLATION FOR ROADWAY OR DRAINAGE DITCH

(SHEET 2 OF 2)

LC2050

REVISIONS / REMARKS

NO.	DESCRIPTION	DATE	BY
		/ /	
		/ /	

SURVEYOR:
DSGNR/LIAISON:
PLOTTED BY: hdrmc 2/18/2016

LakeCounty Division of Transportation

ELA ROAD RESURFACING
LAKE COUNTY STANDARDS & DETAILS

ROUTE	SECTION	SECTION NUMBER	SHEET	SHEETS
CH60	144	15-00144-21-RS	95	150

FILE NAME: U:\Design\Sullivan\Elo Rd Sidewalk\Plan Sheets.dgn

FOR BARE EARTH APPLICATION ONLY

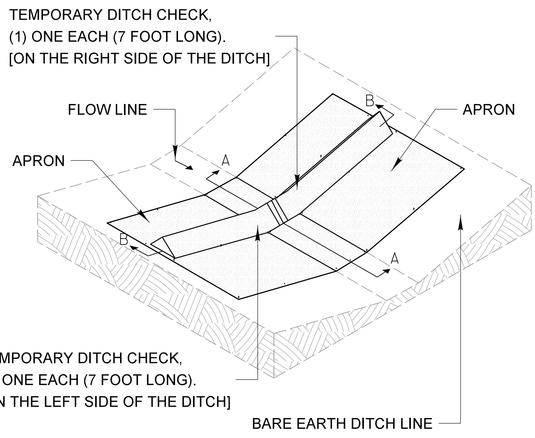

SILT DIKE UNIT ISOMETRIC

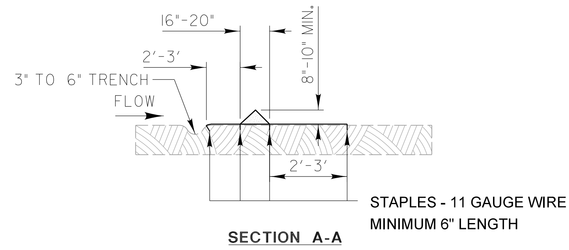

SECTION A-A

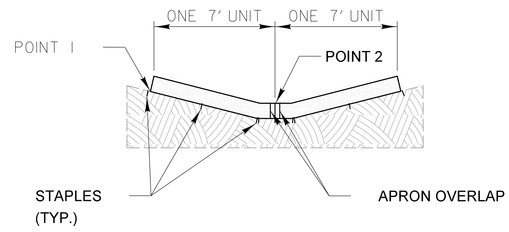

SECTION B-B

NOTES:
THE TEMPORARY DITCH CHECK SHALL BE USED IN BARE EARTH DITCH LINES AND SHALL BE REMOVED JUST PRIOR TO THE INSTALLATION OF EROSION CONTROL BLANKET AND SEEDING.

THE INSTALLATION SHOWN WILL BE MEASURED AND PAID FOR AS A TEMPORARY DITCH CHECK 14 FEET IN LENGTH.

STAPLES SHALL BE PLACED WHERE THE UNITS OVERLAP AND IN THE CENTER OF THE 7' UNIT AS SHOWN ON THE DIAGRAM.

POINT 1 MUST BE HIGHER THAN POINT 2 TO INSURE THAT WATER FLOWS OVER THE DIKE AND NOT AROUND THE ENDS.

REVISIONS	DATE
ADDED DIMENSIONS	04/11/08
REVISED PAY ITEM	04/15/10
ADDED PLASTIC BERM (pg2)	10/10/12

LakeCounty Division of Transportation

APPROVED BY: M. G. ZEMAITIS
DATE: APRIL 1, 2007

TEMPORARY DITCH CHECK INSTALLATION FOR ROADWAY OR DRAINAGE DITCH

(SHEET 1 OF 2)

LC2050

1. SET POSTS AND EXCAVATE OR SLIT-TRENCH A 6-INCH DEEP TRENCH UPSLOPE ALONG THE LINE OF POSTS

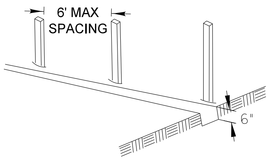

2. ATTACH GEOTEXTILE FILTER FABRIC TO EACH POST WITH A MINIMUM OF 3 (THREE) FASTENERS PER POST AND EXTEND FABRIC TO THE BOTTOM OF THE TRENCH

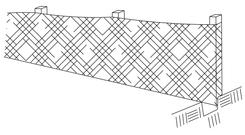

3. BACKFILL AND COMPACT THE EXCAVATED MATERIALS

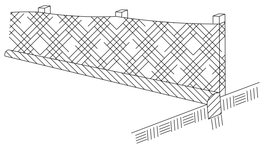

Requirements	Test Methods	Wire Backed Supported Silt Fence [a]	Unsupported Silt Fence: Geotextile Elongation >=50% [b]	Unsupported Silt Fence: Geotextile Elongation <50% [b]
Maximum Post Spacing		4 feet	4 feet	6 feet
Grab Strength	ASTM D 4632			
Machine direction		90 lbs	124 lbs	124 lbs
X-Machine direction		90 lbs	100 lbs	100lbs
Permittivity [c]	ASTM D 4491	0.05 sec^{-1}	0.05 sec^{-1}	0.05 sec^{-1}
Apparent Opening Size	ASTM D 4751	0.024in maximum average roll value		
Ultraviolet stability (retained strength)	ASTM D 4355	70% after 500 hours of exposure		

POSTS - CHOICE OF:
1.2" X 1.2" NOMINAL HARDWOOD POSTS
2.6" X 2.6" NOMINAL NO.2 SOUTHERN PINE
OR
U, T, L, OR C-SHAPE STEEL POSTS WITH MIN. WEIGHT 1.33 LBS/FT

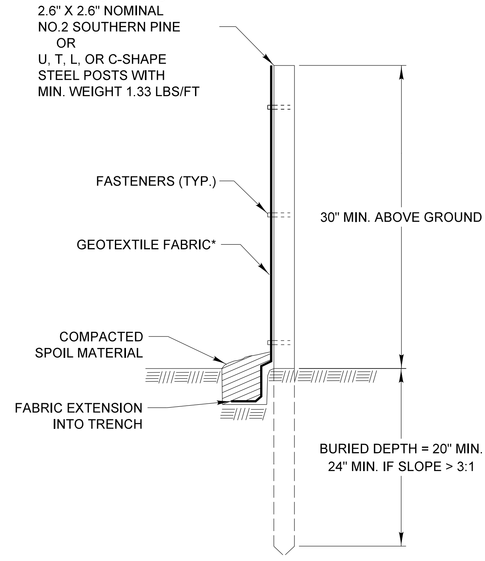

* NOTE: OPTIONAL WIRE SUPPORT
- MIN. 30" HEIGHT
- MIN. 14 GAUGE WIRE
- MIN. 6 HORIZ. WIRES
- MIN. 6" VERTICAL SPACING

SCALE 1" = 1'

REVISIONS	DATE
ORIG. by LCSMC	4/21/08
Update Text	7/15/11

LakeCounty Division of Transportation

APPROVED BY: M. G. ZEMAITIS
DATE: JUNE 20, 2008

PERIMETER EROSION BARRIER INSTALLATION

LC2051

REVISIONS / REMARKS

NO.	DESCRIPTION	DATE	BY
		/ /	
		/ /	

SURVEYOR:
DSGNR/LIAISON:
PLOTTED BY: hdrmc 2/18/2016

0 20 40

LakeCounty Division of Transportation

ELA ROAD RESURFACING
LAKE COUNTY STANDARDS & DETAILS

ROUTE	SECTION	SECTION NUMBER	SHEET	SHEETS
CH60	144	15-00144-21-RS	96	150

FILE NAME: U:\Design\Sullivan\Elo Rd Sidewalk\Plan Sheets.dgn

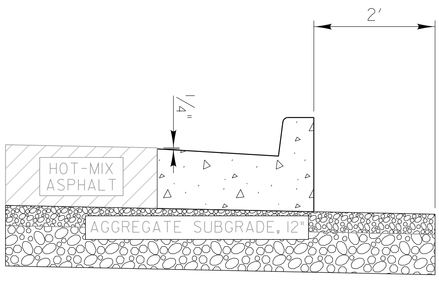

TYPICAL METHOD

NOTE:

MINIMUM FLAG THICKNESS 9"

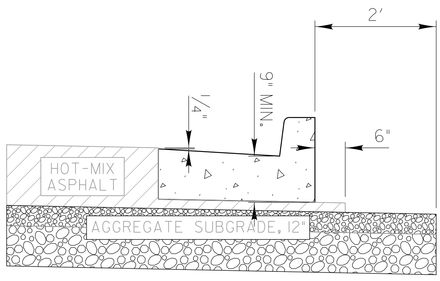

OPTIONAL METHOD

NOTE:
COST OF HOT-MIX ASPHALT MATERIAL UNDER CURB AND 6" OUTSIDE OF CURB TO BE INCIDENTAL TO COST OF COMBINATION CONCRETE CURB AND GUTTER.

SCALE: 1" = 2'

REVISIONS	DATE

LakeCounty
Division of Transportation

APPROVED BY: M. G. ZEMAITIS
DATE: APRIL 1, 2007

CURB & GUTTER
SUBGRADE OPTIONS

LC3000

REVISIONS / REMARKS			
NO.	DESCRIPTION	DATE	BY
		/ /	
		/ /	

SURVEYOR:
DSGNR/LIAISON:
PLOTTED BY: hdrmc 2/18/2016

0 20 40

LakeCounty
Division of Transportation

ELA ROAD RESURFACING
LAKE COUNTY STANDARDS & DETAILS

ROUTE	SECTION	SECTION NUMBER	SHEET	SHEETS
CH60	144	15-00144-21-RS	97	150

FILE NAME: U:\Design\Sullivan\Ela Rd Sidewalk\Plan Sheets.dgn

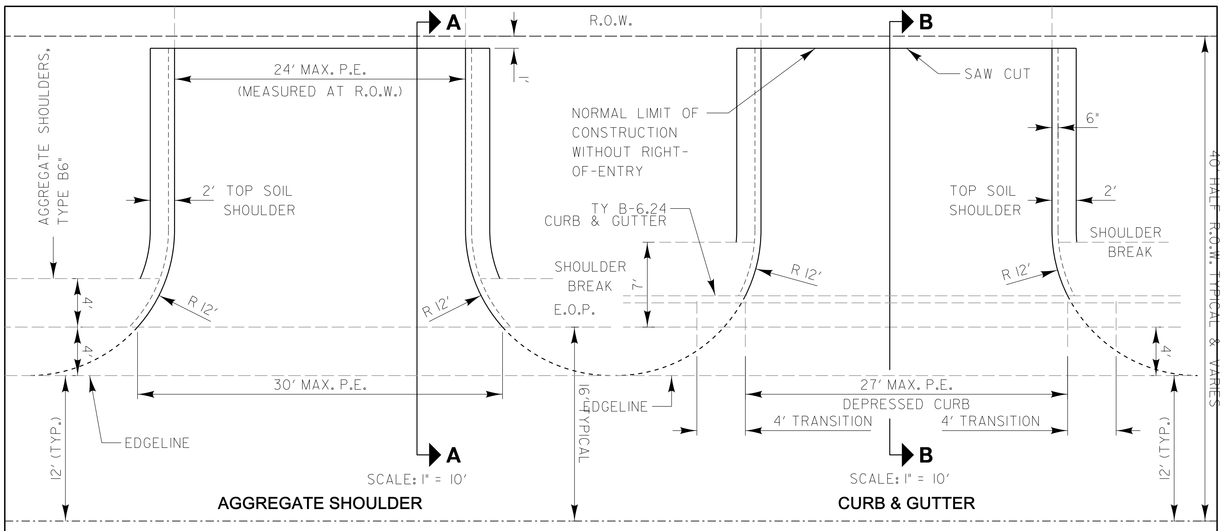

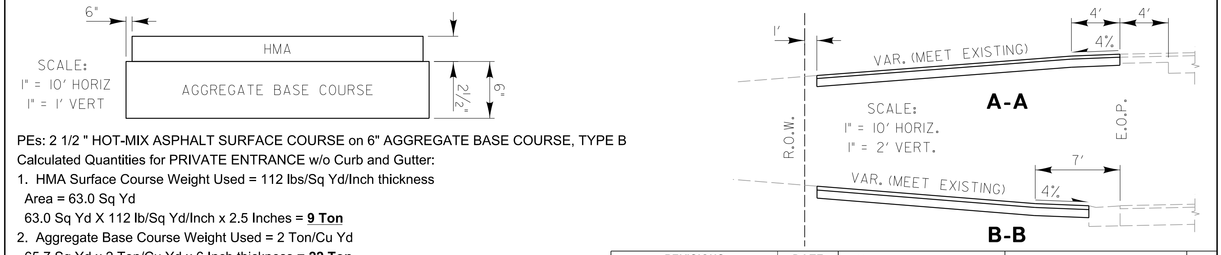

PEs: 2 1/2 " HOT-MIX ASPHALT SURFACE COURSE on 6" AGGREGATE BASE COURSE, TYPE B

Calculated Quantities for PRIVATE ENTRANCE w/o Curb and Gutter:

1. HMA Surface Course Weight Used = 112 lbs/Sq Yd/Inch thickness
   Area = 63.0 Sq Yd
   63.0 Sq Yd X 112 lb/Sq Yd/Inch x 2.5 Inches = **9 Ton**
2. Aggregate Base Course Weight Used = 2 Ton/Cu Yd
   65.7 Sq Yd x 2 Ton/Cu Yd x 6 Inch thickness = **22 Ton**

Calculated Quantities for PRIVATE ENTRANCE with Curb and Gutter:

1. HMA Surface Course Weight Used = 112 lbs/Sq Yd/Inch thickness
   Area = 55.0 Sq Yd
   55.0 Sq Yd X 112 lb/Sq Yd/Inch x 2.5 Inches = **8 Ton**
2. Aggregate Base Course Weight Used = 2 Ton/Cu Yd
   57.2 Sq Yd x 2 Ton/Cu Yd x 6 Inch thickness = **19 Ton**

REVISIONS	DATE
Removed Prime Coat Qty	5/20/08
Revised Ent. EOP Radius	6/4/10
Revised Type A to Type B Aggregate	12/20/12
Revised Curb Transition	1/7/15

LakeCounty Division of Transportation

APPROVED BY: M. G. ZEMAITIS
DATE: APRIL 1, 2007

TYPICAL MINOR ACCESS (PRIVATE ENTRANCE)

LC4100

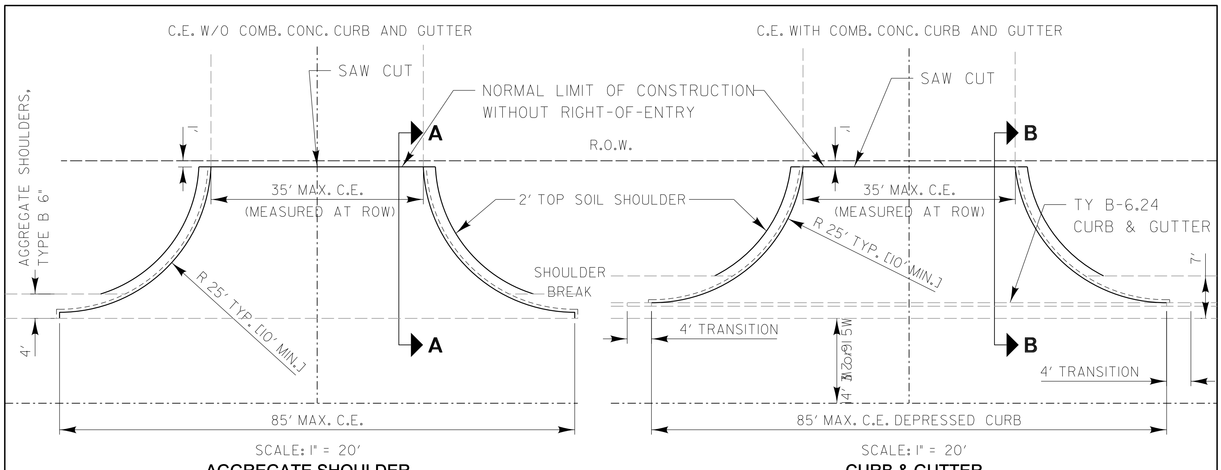

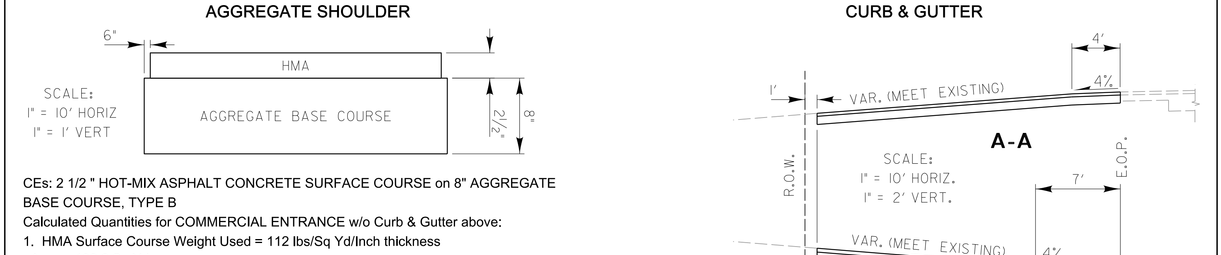

CEs: 2 1/2 " HOT-MIX ASPHALT CONCRETE SURFACE COURSE on 8" AGGREGATE BASE COURSE, TYPE B

Calculated Quantities for COMMERCIAL ENTRANCE w/o Curb & Gutter above:

1. HMA Surface Course Weight Used = 112 lbs/Sq Yd/Inch thickness
   Area = 132.6 Sq Yd
   132.6 Sq Yd x 112 lb/Sq Yd/Inch x 2.5 Inches = **19 Ton**
2. Aggregate Base Course Weight Used = 2 Ton/Cu Yd
   137.0 Sq Yd x 2 Ton/Cu Yd x 8 Inch thickness = **61 Ton**

Calculated Quantities for COMMERCIAL ENTRANCE with Curb & Gutter above:

1. HMA Surface Course Weight Used = 112 lbs/Sq Yd/Inch thickness
   Area = 116.3 Sq Yd
   116.3 Sq Yd x 112 lb/Sq Yd/Inch x 2.5 Inches = **16 Ton**
2. Aggregate Base Course Weight Used = 2 Ton/Cu Yd
   120.4 Sq Yd x 2 Ton/Cu Yd x 8 Inch thickness = **54 Ton**

REVISIONS	DATE
Removed Prime Coat Qty	5/20/08
Revised Type A to Type B Aggregate	12/20/12
Revised Curb Transition	1/7/15

LakeCounty Division of Transportation

APPROVED BY: M. G. ZEMAITIS
DATE: APRIL 1, 2007

TYPICAL MAJOR ACCESS (COMMERCIAL ENTRANCE)

LC4101

NO.	REVISIONS / REMARKS DESCRIPTION	DATE	BY
		/ /	
		/ /	

SURVEYOR: /
DSGNR/LIAISON:
PLOTTED BY: hdrmc 2/8/2016

0 20 40

LakeCounty Division of Transportation

ELA ROAD RESURFACING
LAKE COUNTY STANDARDS & DETAILS

ROUTE	SECTION	SECTION NUMBER	SHEET	SHEETS
CH60	144	15-00144-21-RS	98	150

FILE NAME: U:\Design\Sullivan\Elo Rd Sidewalk\Plan Sheets.dgn

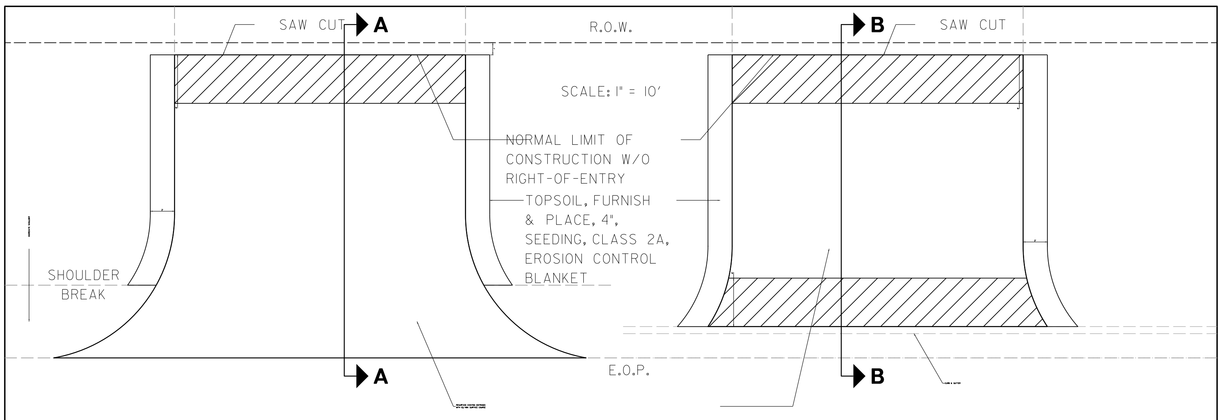

ENTRANCE WITH AGGREGATE SHOULDER **ENTRANCE WITH CURB & GUTTER**

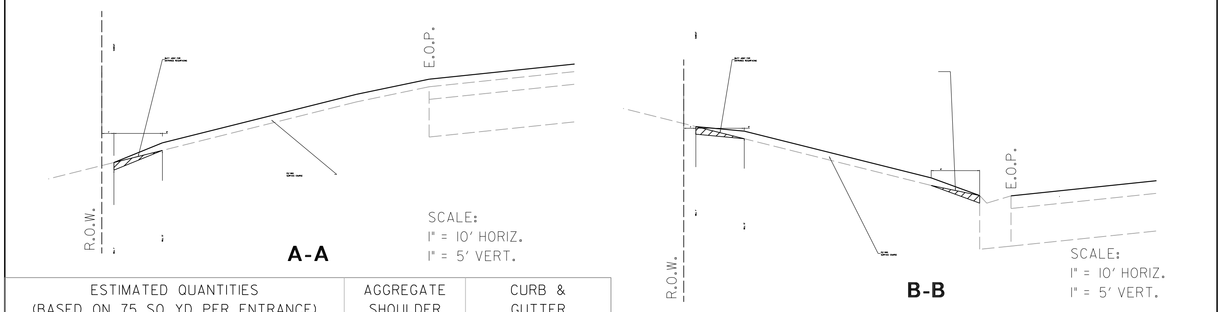

ESTIMATED QUANTITIES (BASED ON 75 SQ YD PER ENTRANCE)	AGGREGATE SHOULDER	CURB & GUTTER
HMA SURFACE COURSE @ 1½"	7 TON	7 TON
BUTT JOINT FOR ENTRANCE RESURFACING	20 FT	45 FT
TOPSOIL, FURNISH & PLACE, 4" SEEDING, CLASS 2A, EROSION CONTROL BLANKET	10 SQ YD	10 SQ YD
BITUMINOUS MATERIALS (PRIME COAT)	12 GAL	12 GAL

REVISIONS	DATE

LakeCounty Division of Transportation

APPROVED BY: M. G. ZEMAITIS
DATE: APRIL 1, 2007

TYPICAL MINOR ACCESS TREATMENT ON RESURFACING PROJECTS

LC4110

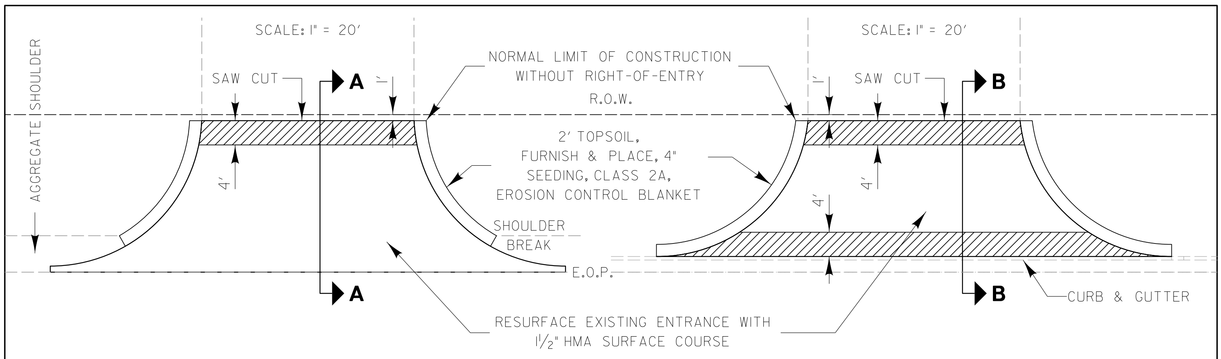

ENTRANCE WITH AGGREGATE SHOULDER **ENTRANCE WITH CURB & GUTTER**

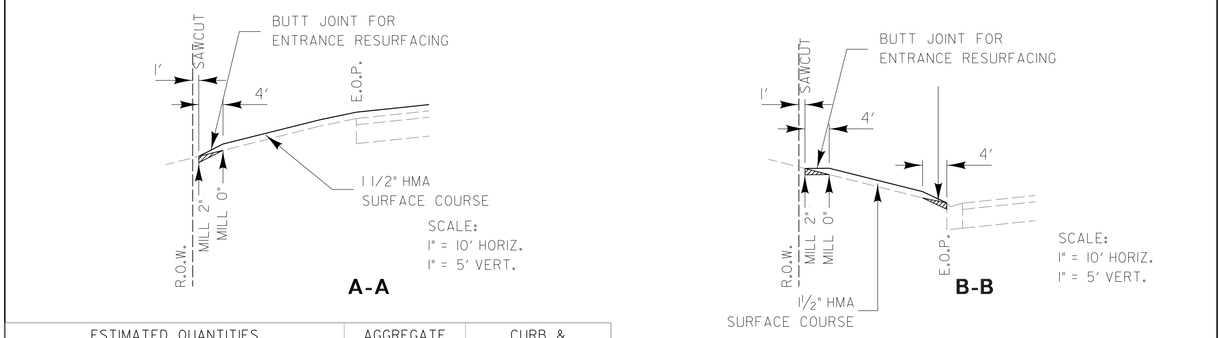

ESTIMATED QUANTITIES (BASED ON 115 SQ YD PER ENTRANCE)	AGGREGATE SHOULDER	CURB & GUTTER
HMA SURFACE COURSE @ 1½"	10 TON	10 TON
BUTT JOINT FOR ENTRANCE RESURFACING	30 FT	70 FT
TOPSOIL, FURNISH & PLACE, 4" SEEDING, CLASS 2A, EROSION CONTROL BLANKET	15 SQ YD	15 SQ YD
BITUMINOUS MATERIALS (PRIME COAT)	18 GAL	18 GAL

REVISIONS	DATE

LakeCounty Division of Transportation

APPROVED BY: M. G. ZEMAITIS
DATE: APRIL 1, 2007

TYPICAL MAJOR ACCESS TREATMENT ON RESURFACING PROJECTS

LC4111

NO.	REVISIONS / REMARKS DESCRIPTION	DATE	BY
		/ /	
		/ /	

SURVEYOR:
DSGNR/LIAISON:
PLOTTED BY: hdrmc 2/18/2016

0 20 40

LakeCounty Division of Transportation

ELA ROAD RESURFACING
LAKE COUNTY STANDARDS & DETAILS

ROUTE	SECTION	SECTION NUMBER	SHEET	SHEETS
CH60	144	15-00144-21-RS	99	150

FILE NAME: U:\Design\Sullivan\Elo Rd Sidewalk\Plan Sheets.dgn

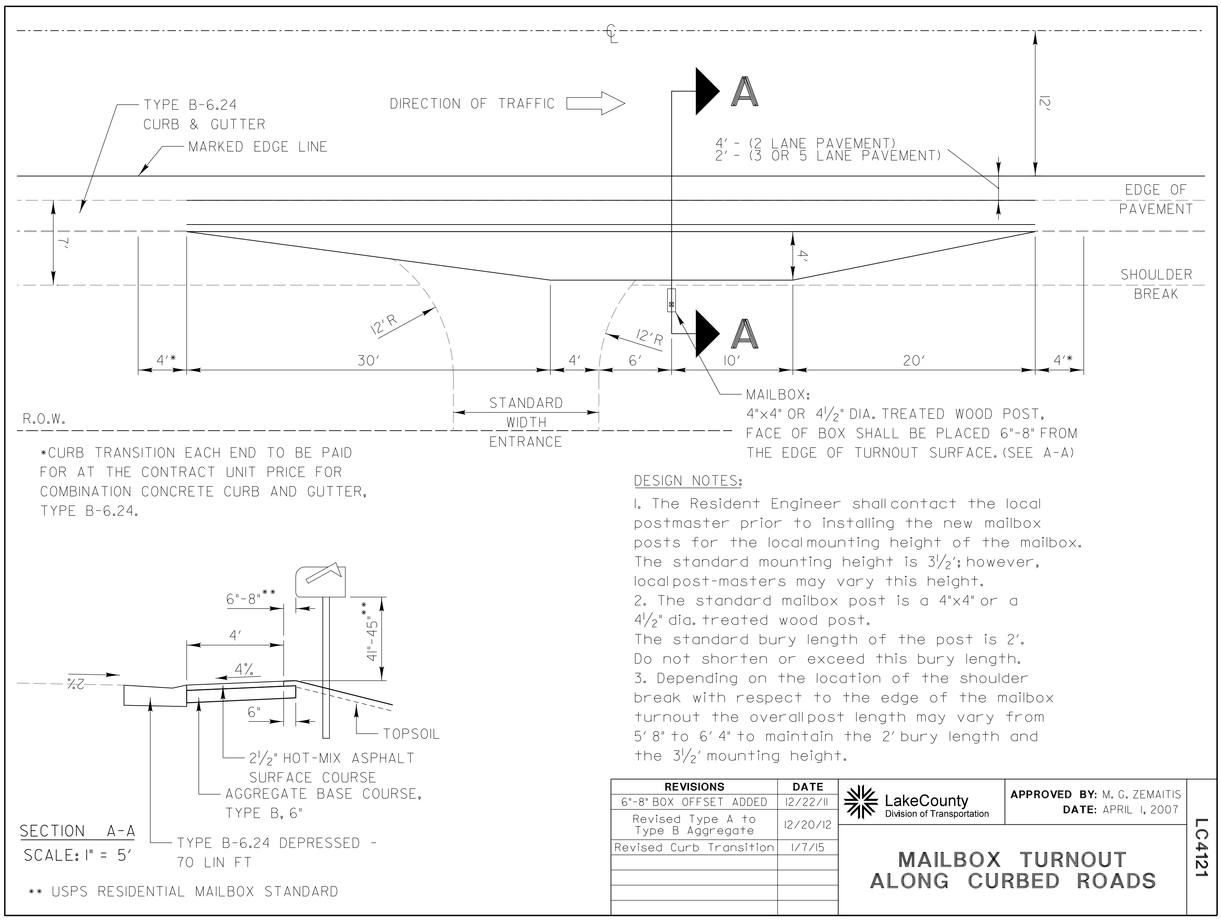

*CURB TRANSITION EACH END TO BE PAID FOR AT THE CONTRACT UNIT PRICE FOR COMBINATION CONCRETE CURB AND GUTTER, TYPE B-6.24.

DESIGN NOTES:

1. The Resident Engineer shall contact the local postmaster prior to installing the new mailbox posts for the local mounting height of the mailbox. The standard mounting height is 3½'; however, local post-masters may vary this height.
2. The standard mailbox post is a 4"x4" or a 4½" dia. treated wood post. The standard bury length of the post is 2'. Do not shorten or exceed this bury length.
3. Depending on the location of the shoulder break with respect to the edge of the mailbox turnout the overall post length may vary from 5' 8" to 6' 4" to maintain the 2' bury length and the 3½' mounting height.

SECTION A-A
SCALE: 1" = 5'

** USPS RESIDENTIAL MAILBOX STANDARD

REVISIONS	DATE
6'-8" BOX OFFSET ADDED	12/22/11
Revised Type A to Type B Aggregate	12/20/12
Revised Curb Transition	1/7/15

LakeCounty Division of Transportation

APPROVED BY: M. G. ZEMAITIS
DATE: APRIL 1, 2007

MAILBOX TURNOUT ALONG CURBED ROADS

LC4121

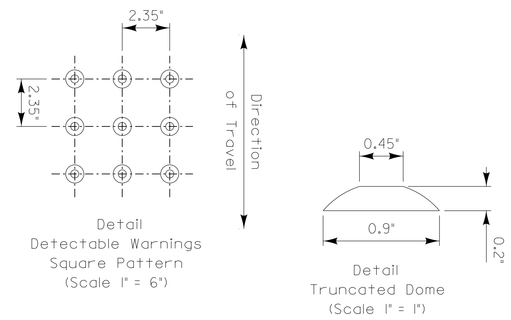

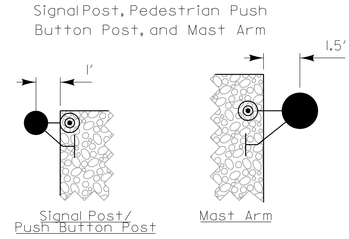

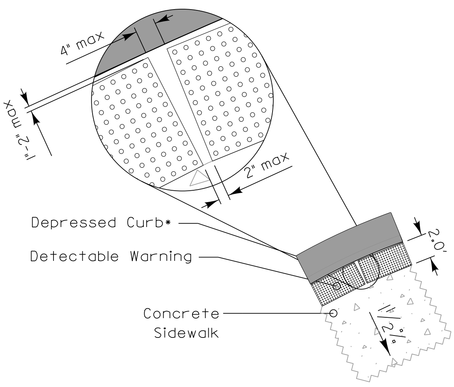

*GENERAL NOTES:

1. Cross slopes on sidewalks and paths shall not exceed 1.5% except at locations detailed on the plans.
2. Only whole cast iron panels from the manufacturer shall be used for the detectable warnings. Cut panels shall not be allowed.
3. The gutter slope for the DEPRESSED CURB adjacent to the curb ramp shall be a maximum of 5% (standard curb and gutter is 6%). The back of curb rise shall be a maximum of ½' (standard depressed curb is 1½'). See IDOT standard 606001 for the different curb dimensions.
4. The Depressed Curb and the Transition Curb will be paid for as COMBINATION CONCRETE CURB AND GUTTER of the type adjacent to the curb ramp.
5. The DETECTABLE WARNINGS shall be installed according to Article 424.09 of the IDOT Standard Specifications and the LCDOT specification 42400800 DETECTABLE WARNINGS. Detectable warnings shall be measured and paid for per square foot.

REVISIONS	DATE
Added Warning Details	8/1/2009
Updates & Remove Duplicates	7/14/2015

LakeCounty Division of Transportation

APPROVED BY: M. G. ZEMAITIS
DATE: APRIL 1, 2007

DETECTABLE WARNINGS and PEDESTRIAN PUSHBUTTON LOCATIONS

LC4201

REVISIONS / REMARKS

NO.	DESCRIPTION	DATE	BY
		/ /	
		/ /	

SURVEYOR:
DSGNR/LIAISON:
PLOTTED BY: hdrmc 2/8/2016

0 20 40

LakeCounty Division of Transportation

ELA ROAD RESURFACING
LAKE COUNTY STANDARDS & DETAILS

ROUTE	SECTION	SECTION NUMBER	SHEET	SHEETS
CH60	144	15-00144-21-RS	100	150

FILE NAME: U:\Design\Sullivan\Ela Rd Sidewalk\Plan Sheets.dgn

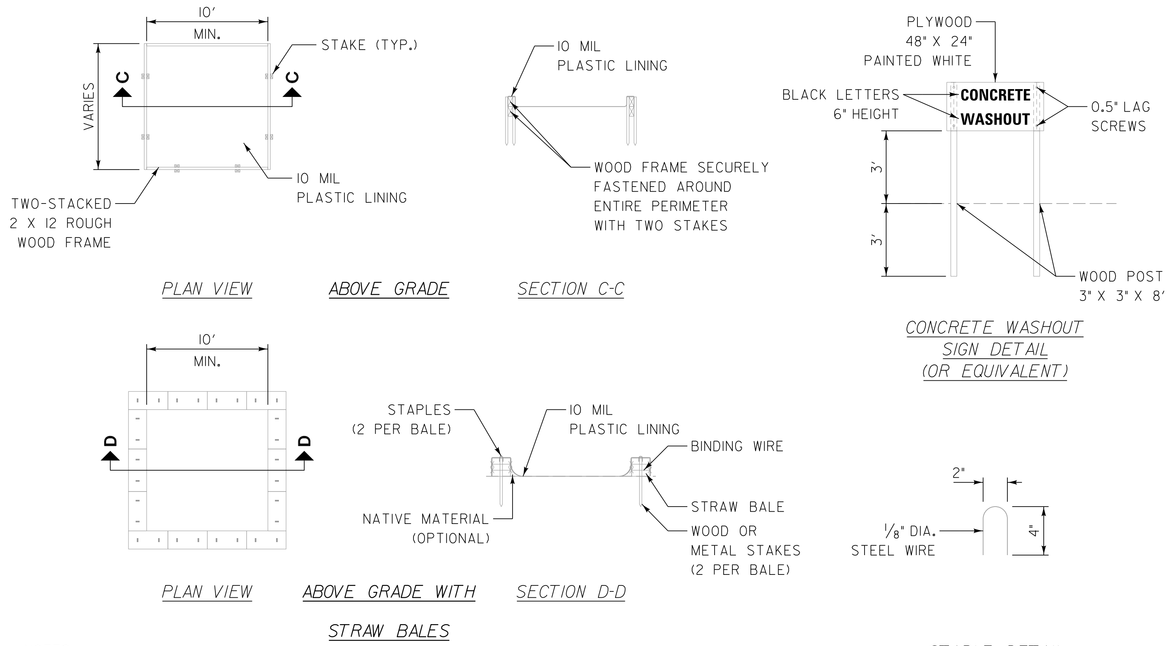

NOTES:

1. ACTUAL LAYOUT DETERMINED IN FIELD.
2. OTHER WASHOUT DESIGNS MAY BE USED IF APPROVED BY THE ENGINEER.
3. THE CONCRETE WASHOUT SIGN SHALL BE INSTALLED WITHIN 30 FEET OF THE TEMPORARY CONCRETE WASHOUT FACILITY.

NOT TO SCALE

REVISIONS	DATE

LakeCounty Division of Transportation

APPROVED BY: MGZ
DATE: March 17, 2008

CONCRETE WASHOUT FACILITIES

SHEET 2 OF 2

LC4202

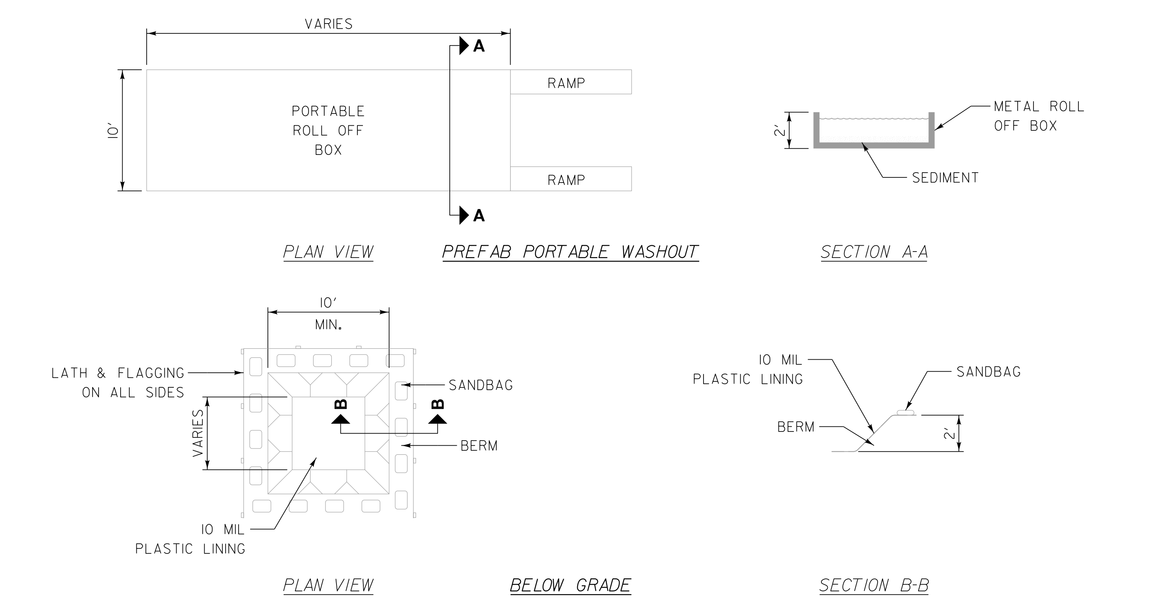

NOTES:

1. ACTUAL LAYOUT DETERMINED IN FIELD.
2. OTHER WASHOUT DESIGNS MAY BE USED IF APPROVED BY THE ENGINEER.
3. THE CONCRETE WASHOUT SIGN SHALL BE INSTALLED WITHIN 30 FEET OF THE TEMPORARY CONCRETE WASHOUT FACILITY.

NOT TO SCALE

REVISIONS	DATE

LakeCounty Division of Transportation

APPROVED BY: MGZ
DATE: March 17, 2008

CONCRETE WASHOUT FACILITIES

SHEET 1 OF 2

LC4202

NO.	REVISIONS / REMARKS DESCRIPTION	DATE	BY
		/ /	
		/ /	

SURVEYOR:
DSGNR/LIAISON:
PLOTTED BY: hdrmc 2/18/2016

FILE NAME: U:\Design\Sullivan\Elo Rd Sidewalk\Plan Sheets.dgn

0 20 40

LakeCounty Division of Transportation

ELA ROAD RESURFACING

LAKE COUNTY STANDARDS & DETAILS

ROUTE	SECTION	SECTION NUMBER	SHEET	SHEETS
CH60	144	15-00144-21-RS	101	150

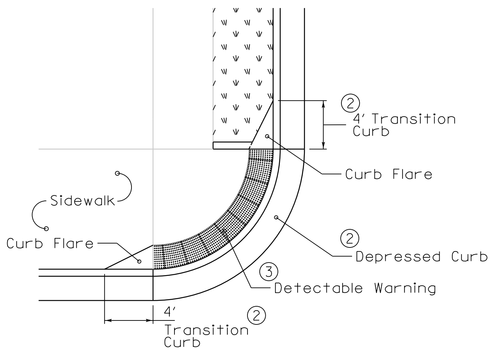

Depressed Corner

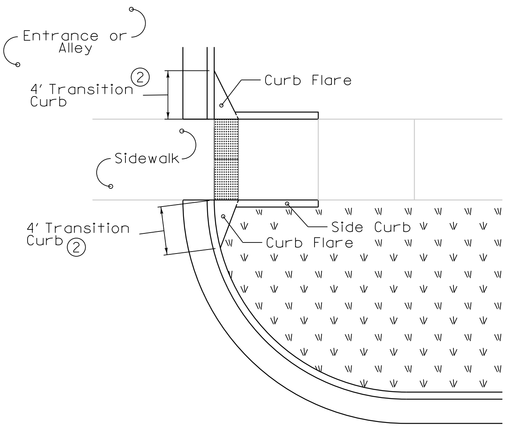

Entrance / Alley
Pedestrian Crossing

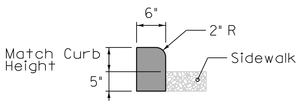

Side Curb Type "B" Detail

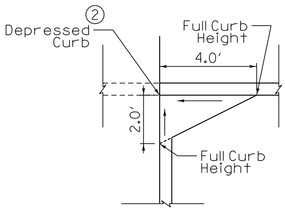

Curb Flare Detail

Design Notes:

1. Pavement type and details are shown elsewhere in the plans.
2. The Depressed Curb and the Transition Curb will be paid for as COMBINATION CONCRETE CURB AND GUTTER of the type adjacent to the curb ramp. See IDOT Standard 606001 for details of Depressed Curb adjacent to curb ramp.
3. The Detectable Warnings shall be installed in accordance with Article 424.09 of the IDOT Standard Specifications and the LCDOT Specification 42400800 DETECTABLE WARNINGS and will be measured and paid for per square foot.

REVISIONS	DATE

LakeCounty Division of Transportation

APPROVED BY: M. G. ZEMAITIS
DATE: JAN 7, 2015

CURB FLARES FOR SIDEWALKS

LC4204

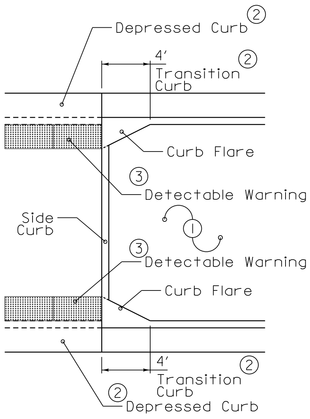

Median Curb Ramp

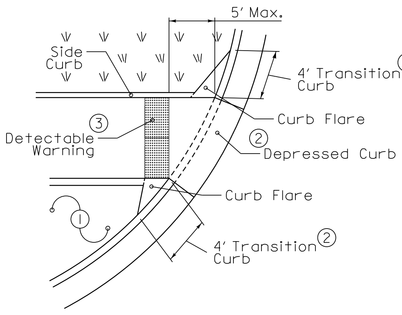

Perpendicular Curb Ramp

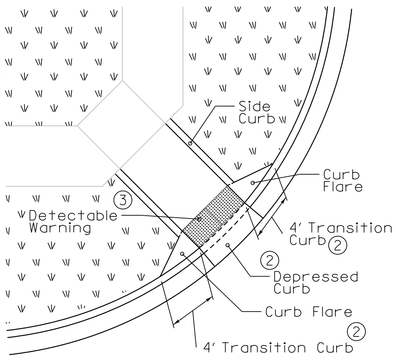

Diagonal Curb Ramp

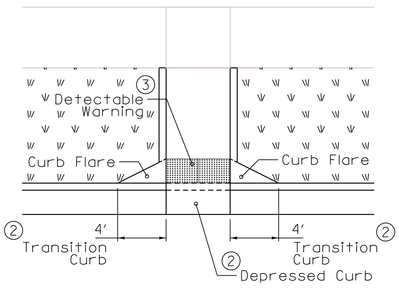

Mid-Block Curb Ramp

Design Notes:

1. Pavement type and details are shown elsewhere in the plans.
2. The Depressed Curb and the Transition Curb will be paid for as COMBINATION CONCRETE CURB AND GUTTER of the type adjacent to the curb ramp. See IDOT Standard 606001 for details of Depressed Curb adjacent to curb ramp.
3. The Detectable Warnings shall be installed in accordance with Article 424.09 of the IDOT Standard Specifications and the LCDOT Specification 42400800 DETECTABLE WARNINGS and will be measured and paid for per square foot.

REVISIONS	DATE

LakeCounty Division of Transportation

APPROVED BY: M. G. ZEMAITIS
DATE: JAN 7, 2015

CURB FLARES FOR SIDEWALKS

LC4204

NO.	REVISIONS / REMARKS DESCRIPTION	DATE	BY
		/ /	
		/ /	

SURVEYOR:
DSGNR/LIAISON:
PLOTTED BY: hdrmc 2/18/2016

FILE NAME: U:\Design\Sullivan\Elo Rd Sidewalk\Plan Sheets.dgn

LakeCounty Division of Transportation

ELA ROAD RESURFACING
LAKE COUNTY STANDARDS & DETAILS

ROUTE	SECTION	SECTION NUMBER	SHEET	SHEETS
CH60	144	15-00144-21-RS	102	150

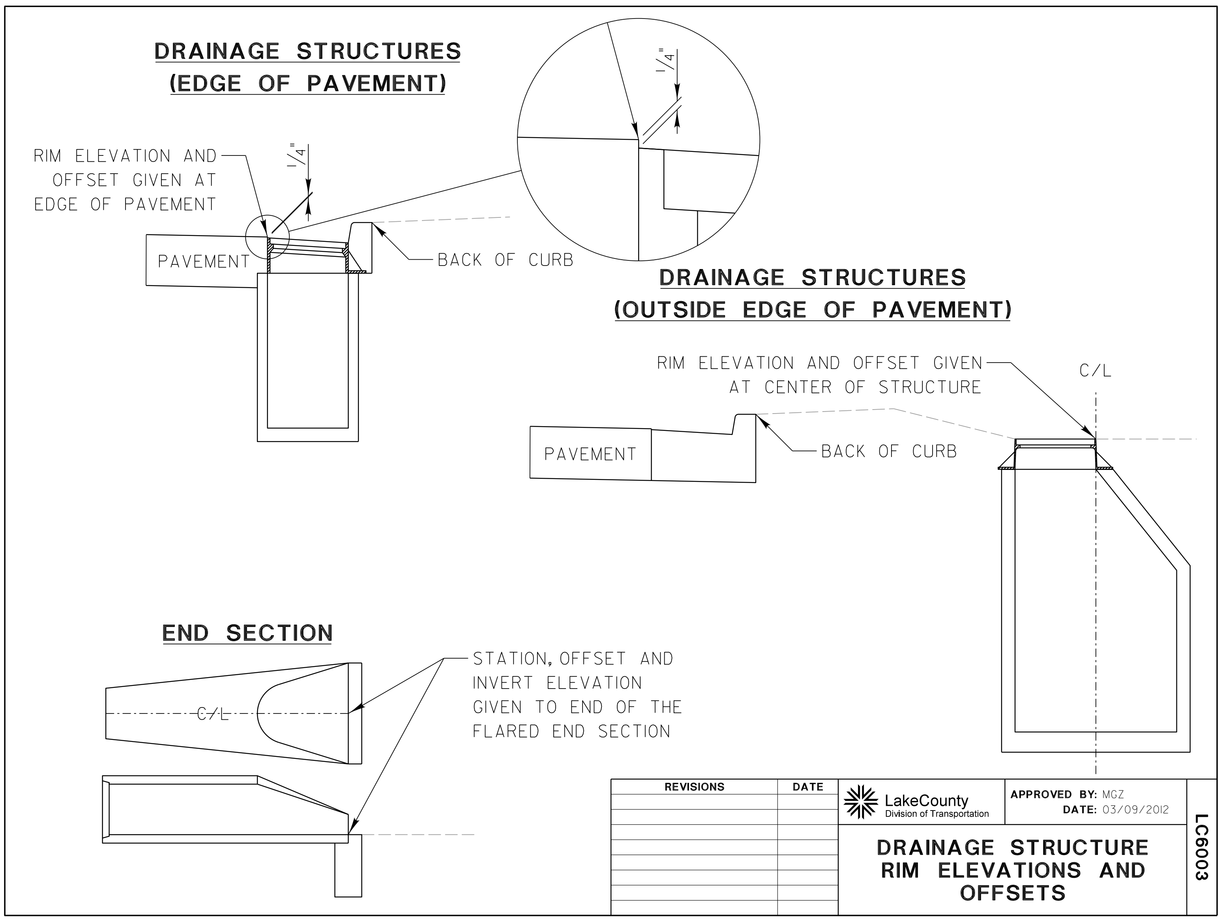

REVISIONS	DATE

LakeCounty Division of Transportation

APPROVED BY: MGZ
DATE: 03/09/2012

DRAINAGE STRUCTURE RIM ELEVATIONS AND OFFSETS

LC6003

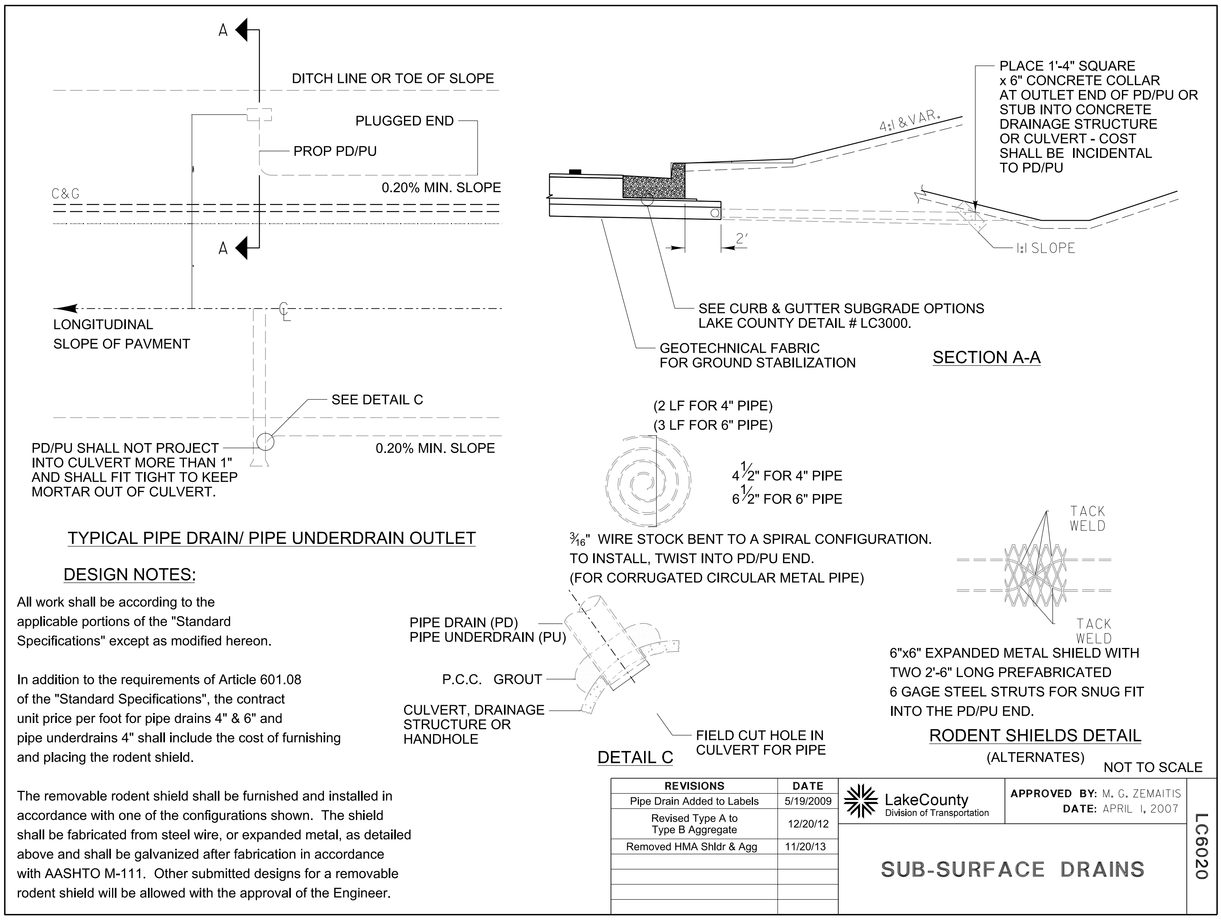

DESIGN NOTES:

All work shall be according to the applicable portions of the "Standard Specifications" except as modified hereon.

In addition to the requirements of Article 601.08 of the "Standard Specifications", the contract unit price per foot for pipe drains 4" & 6" and pipe underdrains 4" shall include the cost of furnishing and placing the rodent shield.

The removable rodent shield shall be furnished and installed in accordance with one of the configurations shown. The shield shall be fabricated from steel wire, or expanded metal, as detailed above and shall be galvanized after fabrication in accordance with AASHTO M-111. Other submitted designs for a removable rodent shield will be allowed with the approval of the Engineer.

REVISIONS	DATE
Pipe Drain Added to Labels	5/19/2009
Revised Type A to Type B Aggregate	12/20/12
Removed HMA Shldr & Agg	11/20/13

LakeCounty Division of Transportation

APPROVED BY: M. G. ZEMAITIS
DATE: APRIL 1, 2007

SUB-SURFACE DRAINS

LC6020

NO.	REVISIONS / REMARKS DESCRIPTION	DATE	BY
		/ /	
		/ /	

SURVEYOR:
DSGNR/LIAISON:
PLOTTED BY: hdrmc 2/18/2016

FILE NAME: U:\Design\Sullivan\Elo Rd Sidewalk\Plan Sheets.dgn

LakeCounty Division of Transportation

ELA ROAD RESURFACING
LAKE COUNTY STANDARDS & DETAILS

ROUTE	SECTION	SECTION NUMBER	SHEET	SHEETS
CH60	144	15-00144-21-RS	103	150

TYPICAL APPLICATION OF TRAFFIC CONTROL DEVICES for HIGHWAY CONSTRUCTION, CONTRACT MAINTENANCE and UTILITY OPERATIONS

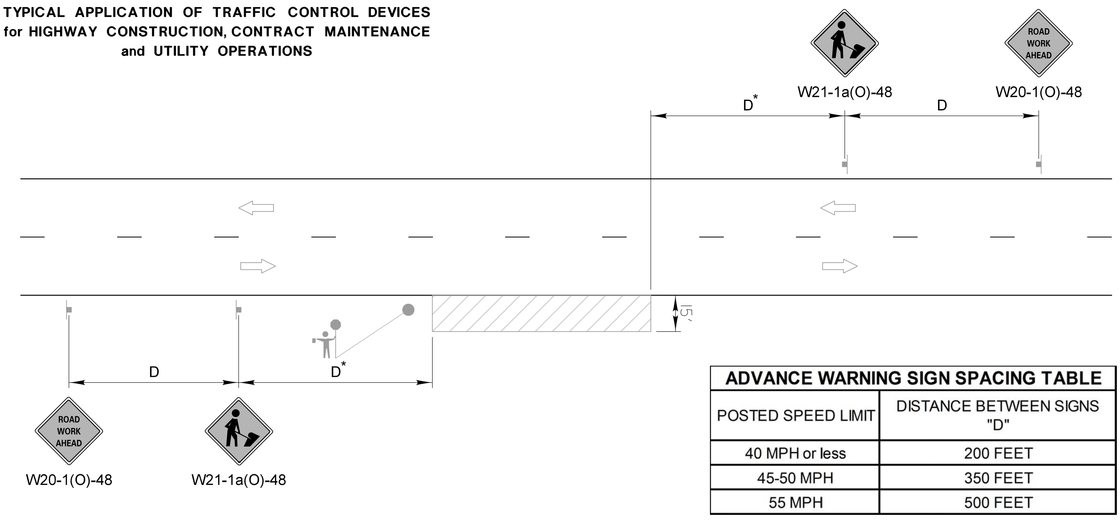

ADVANCE WARNING SIGN SPACING TABLE	
POSTED SPEED LIMIT	DISTANCE BETWEEN SIGNS "D"
40 MPH or less	200 FEET
45-50 MPH	350 FEET
55 MPH	500 FEET

GENERAL NOTES:

This special detail is used at any time, any vehicle, equipment, workers or their activities require a stationary, intermittent or continuous moving operation within 15 feet of the traffic lane, where the average speed is 1 mph or less.

* Minimum distance "D" is shown in the Advance Warning Sign Spacing Table. If the work is a moving operation, the maximum distance "D" may be extended to ½ the length required for one normal working day's operation or 4 miles, whichever is less.

If the work operation does not exceed 60 minutes, traffic control may be according to I.D.O.T. Highway Standard 701301.

SYMBOLS

- WORK AREA
- SIGN ON PORTABLE OR PERMANENT SUPPORT
- FLAGGER WITH TRAFFIC CONTROL SIGN WHEN REQUIRED

NOT TO SCALE

MODIFIED IDOT STANDARD 701011-02

REVISIONS	DATE
Title Block Revision	8/1/09
Reformat LCDOT Standard	7/15/10

LakeCounty Division of Transportation

APPROVED BY: A. KHAWAJA
DATE: APRIL 1, 2007

TWO LANE, TWO WAY, OFF-ROAD OPERATIONS DAY OPERATIONS ONLY

LC7000

TYPICAL APPLICATION OF TRAFFIC CONTROL DEVICES for HIGHWAY CONSTRUCTION, CONTRACT MAINTENANCE and UTILITY OPERATIONS

NOT TO SCALE

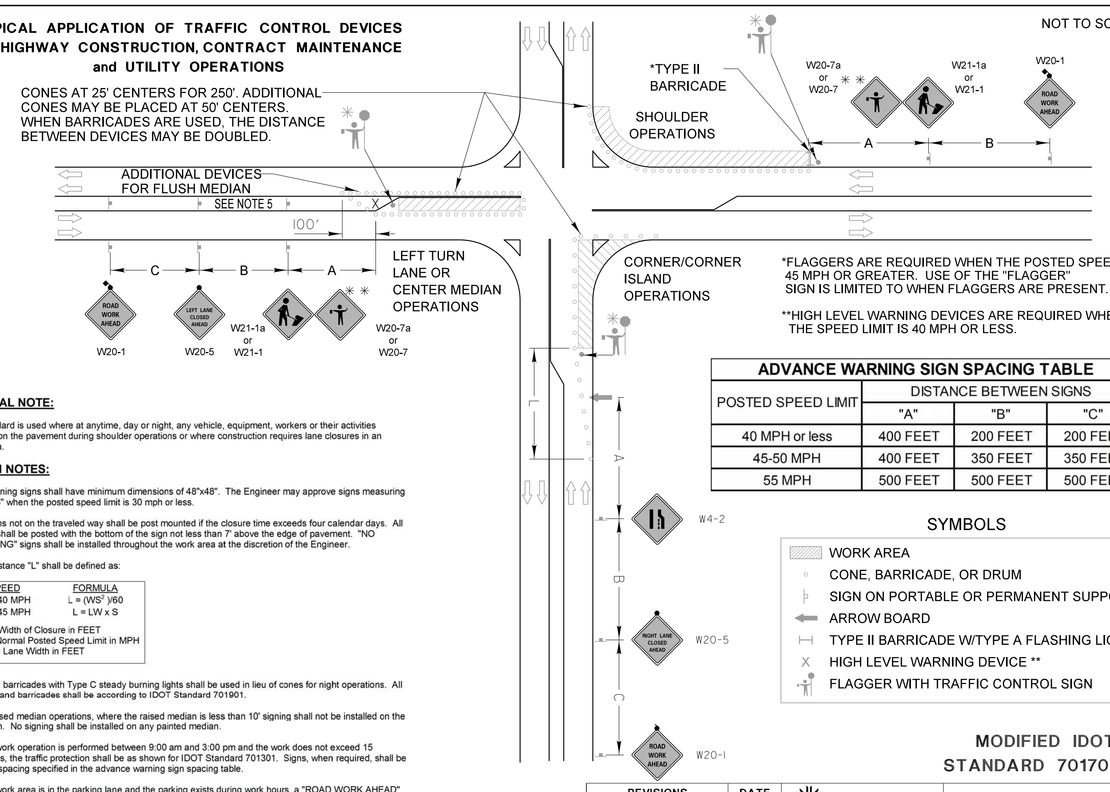

*FLAGGERS ARE REQUIRED WHEN THE POSTED SPEED IS 45 MPH OR GREATER. USE OF THE "FLAGGER" SIGN IS LIMITED TO WHEN FLAGGERS ARE PRESENT.

**HIGH LEVEL WARNING DEVICES ARE REQUIRED WHEN THE SPEED LIMIT IS 40 MPH OR LESS.

ADVANCE WARNING SIGN SPACING TABLE			
POSTED SPEED LIMIT	DISTANCE BETWEEN SIGNS		
	"A"	"B"	"C"
40 MPH or less	400 FEET	200 FEET	200 FEET
45-50 MPH	400 FEET	350 FEET	350 FEET
55 MPH	500 FEET	500 FEET	500 FEET

SYMBOLS

- WORK AREA
- CONE, BARRICADE, OR DRUM
- SIGN ON PORTABLE OR PERMANENT SUPPORT
- ARROW BOARD
- TYPE II BARRICADE W/TYPE A FLASHING LIGHT
- HIGH LEVEL WARNING DEVICE **
- FLAGGER WITH TRAFFIC CONTROL SIGN

GENERAL NOTE:

This Standard is used where at anytime, day or night, any vehicle, equipment, workers or their activities encroach on the pavement during shoulder operations or where construction requires lane closures in an urban area.

DESIGN NOTES:

1. All warning signs shall have minimum dimensions of 48"x48". The Engineer may approve signs measuring 36"x36" when the posted speed limit is 30 mph or less.
2. All signs not on the traveled way shall be post mounted if the closure time exceeds four calendar days. All signs shall be posted with the bottom of the sign not less than 7' above the edge of pavement. "NO PARKING" signs shall be installed throughout the work area at the discretion of the Engineer.
3. The distance "L" shall be defined as:

SPEED	FORMULA
≤ 40 MPH	$L = (WS^2)/60$
≥ 45 MPH	$L = LW \times S$

W = Width of Closure in FEET
S = Normal Posted Speed Limit in MPH
LW = Lane Width in FEET

4. Type II barricades with Type C steady burning lights shall be used in lieu of cones for night operations. All cones and barricades shall be according to IDOT Standard 701901.
5. For raised median operations, where the raised median is less than 10' signing shall not be installed on the median. No signing shall be installed on any painted median.
6. If the work operation is performed between 9:00 am and 3:00 pm and the work does not exceed 15 minutes, the traffic protection shall be as shown for IDOT Standard 701301. Signs, when required, shall be at the spacing specified in the advance warning sign spacing table.
7. If the work area is in the parking lane and the parking exists during work hours, a "ROAD WORK AHEAD" sign shall be installed in advance of work area at the spacing specified in the Advance Warning Sign Spacing Table and the area protected with cones or barricades.
8. Type A flashing lights shall be used on each approach in advance of the work area during hours of darkness and installed above the first two sign in each series and the high level warning devices.
9. Longitudinal dimensions may be adjusted to fit field conditions.
10. Form BT 725 is required.

MODIFIED IDOT STANDARD 701701-08

REVISIONS	DATE
Revised IDOT Reference	2/1/08
Title Block Revision	8/1/09
Reformat LCDOT Standard	7/15/10
Removed "Worker" & "Flagger" signs	6/26/12

LakeCounty Division of Transportation

APPROVED BY: ANTHONY KHAWAJA
DATE: APRIL 1, 2007

URBAN LANE CLOSURE MULTILANE INTERSECTION

LC7003

NO.	REVISIONS / REMARKS DESCRIPTION	DATE	BY
		/ /	
		/ /	

SURVEYOR:
DSGNR/LIAISON:
PLOTTED BY: hdrmc 2/18/2016

0 20 40

LakeCounty Division of Transportation

ELA ROAD RESURFACING
LAKE COUNTY STANDARDS & DETAILS

ROUTE	SECTION	SECTION NUMBER	SHEET	SHEETS
CH60	144	15-00144-21-RS	104	150

FILE NAME: U:\Design\Sullivan\Elo Rd Sidewalk\Plan Sheets.dgn

TYPICAL APPLICATION OF TRAFFIC CONTROL DEVICES for HIGHWAY CONSTRUCTION, CONTRACT MAINTENANCE and UTILITY OPERATIONS

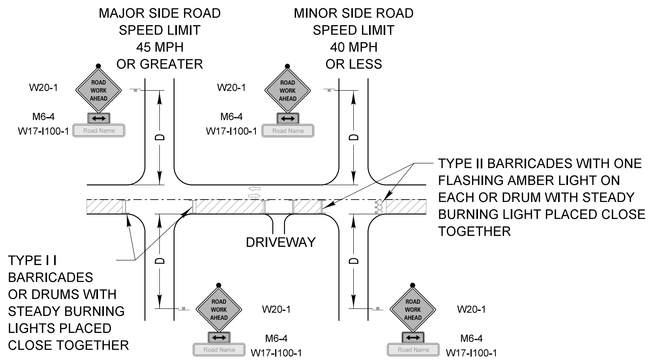

SYMBOLS

- WORK AREA
- SIGN ON PORTABLE OR PERMANENT SUPPORT
- TYPE II BARRICADE W/TYPE A FLASHING LIGHT
- DRUM WITH STEADY BURNING LIGHT

ADVANCE WARNING SIGN SPACING TABLE	
POSTED SPEED LIMIT	DISTANCE BETWEEN SIGNS "D"
40 MPH or less	200 FEET
45-50 MPH	350 FEET
55 MPH	500 FEET

GENERAL NOTE:

This Standard is used where at any time, day or night, any vehicle, equipment, workers or their activities encroach on the pavement or where construction requires lane closures.

DESIGN NOTES:

1. For a side road with a speed limit of 40 mph or less, the closed portion of the main route shall be protected by blocking with Type II barricades or drums, 1/3 of the cross section of the closed portion of the roadway.
2. For a side road with a speed limit of 45 mph or greater, the closed portion of the main route shall be protected by blocking with Type II barricades or drums, 1/2 of the cross section of the closed portion of the roadway.
3. All W20-1 "ROAD WORK AHEAD" signs shall be 48"x48" with fluorescent orange reflective sheeting with an amber Type A flashing light mounted on the sign.
4. When the side road lies between the beginning of the mainline signing and the work zone, a M6-1 Single Headed Arrow shall be used in lieu of the M6-4 Double Headed Arrow.
5. For a lane closure on a side road, use the applicable portions of the appropriate Highway Standard or Traffic Control Detail. The spacing of the signs and barricades or drums shall be adjusted for field conditions as directed by the engineer. The directional arrow shall be covered or removed when no longer consistent with the side road closure.
6. Advance warning signs shall be omitted on driveways unless otherwise noted.
7. The traffic control and protection for side roads and intersections shall be included in the contract lump sum price for "TRAFFIC CONTROL AND PROTECTION, SPECIAL."

NOT TO SCALE

MODIFIED IDOT DISTRICT ONE SIDE ROAD DETAIL

REVISIONS	DATE
Title Block Revision	8/1/09
Reformat LCDOT Standard	7/15/10
Use of Drums in lieu Type III Barricade	4/22/14

LakeCounty Division of Transportation

APPROVED BY: ANTHONY KHAWAJA
DATE: APRIL 1, 2007

TRAFFIC CONTROL and PROTECTION for SIDEROADS, INTERSECTIONS and DRIVEWAYS

LC7004

TYPICAL APPLICATION OF TRAFFIC CONTROL DEVICES for HIGHWAY CONSTRUCTION, CONTRACT MAINTENANCE and UTILITY OPERATIONS

3 LANE ROAD SECTION with 2-WAY LEFT TURN LANE

NOT TO SCALE

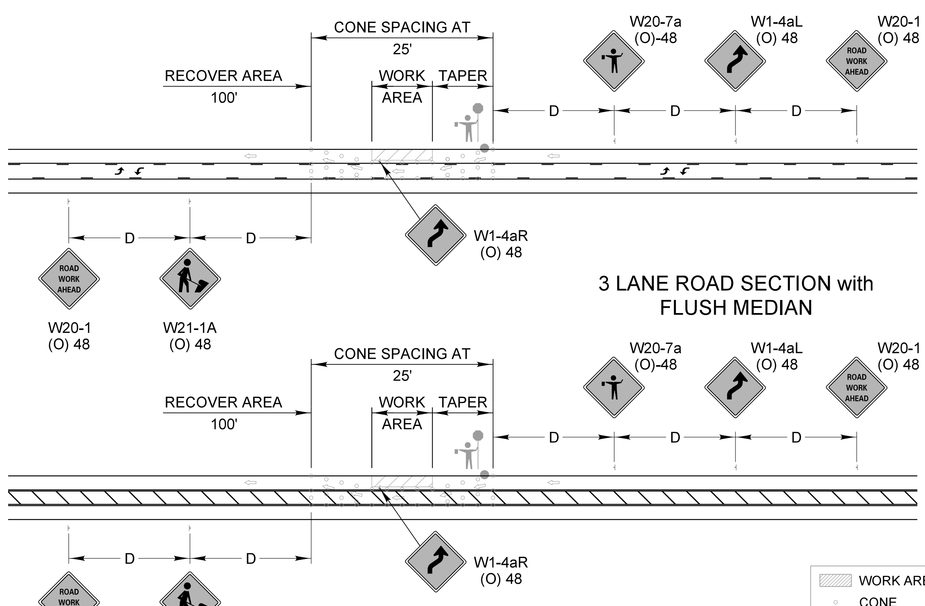

3 LANE ROAD SECTION with FLUSH MEDIAN

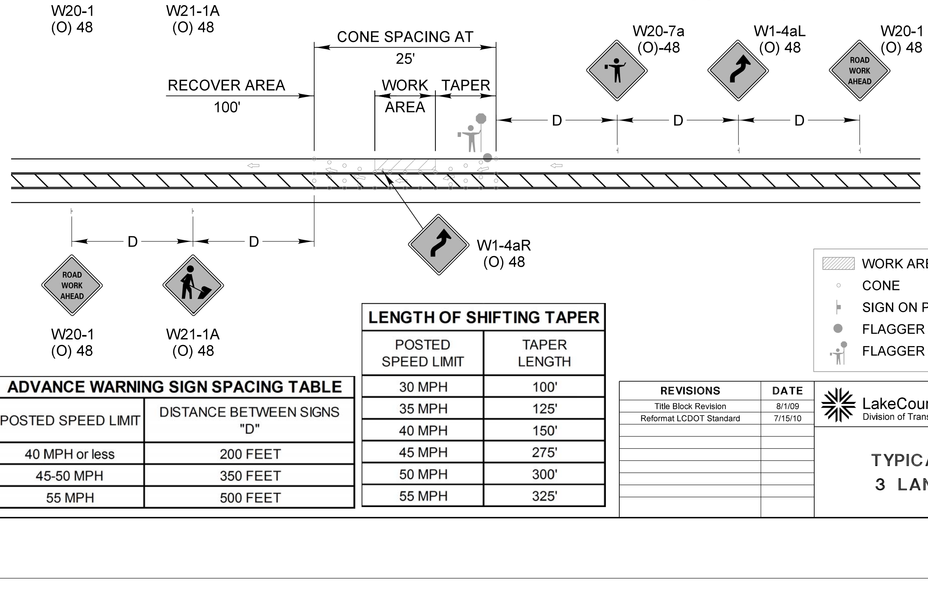

GENERAL NOTE:

This Standard is used where during the day only, any vehicle, equipment, workers or their activities encroach on a 3 lane, two way pavement requiring the closure of one traffic lane.

SYMBOLS

- WORK AREA
- CONE
- SIGN ON PORTABLE OR PERMANENT SUPPORT
- FLAGGER STATION
- FLAGGER WITH SLOW PADDLE

ADVANCE WARNING SIGN SPACING TABLE	
POSTED SPEED LIMIT	DISTANCE BETWEEN SIGNS "D"
40 MPH or less	200 FEET
45-50 MPH	350 FEET
55 MPH	500 FEET

LENGTH OF SHIFTING TAPER	
POSTED SPEED LIMIT	TAPER LENGTH
30 MPH	100'
35 MPH	125'
40 MPH	150'
45 MPH	275'
50 MPH	300'
55 MPH	325'

REVISIONS	DATE
Title Block Revision	8/1/09
Reformat LCDOT Standard	7/15/10

LakeCounty Division of Transportation

APPROVED BY: A. KHAWAJA
DATE: APRIL 1, 2007

TYPICAL LANE CLOSURE 3 LANE ROAD SECTION

LC7005

REVISIONS / REMARKS			
NO.	DESCRIPTION	DATE	BY
		/ /	
		/ /	

SURVEYOR:
DSGNR/LIAISON:
PLOTTED BY: hdrmc 2/18/2016

0 20 40

LakeCounty Division of Transportation

LAKE COUNTY STANDARDS & DETAILS

ELA ROAD RESURFACING

ROUTE	SECTION	SECTION NUMBER	SHEET	SHEETS
CH60	144	15-00144-21-RS	105	150

FILE NAME: U:\Design\Sullivan\Ela Rd Sidewalk\Plan Sheets.dgn

DIRECTION INDICATOR BARRICADES

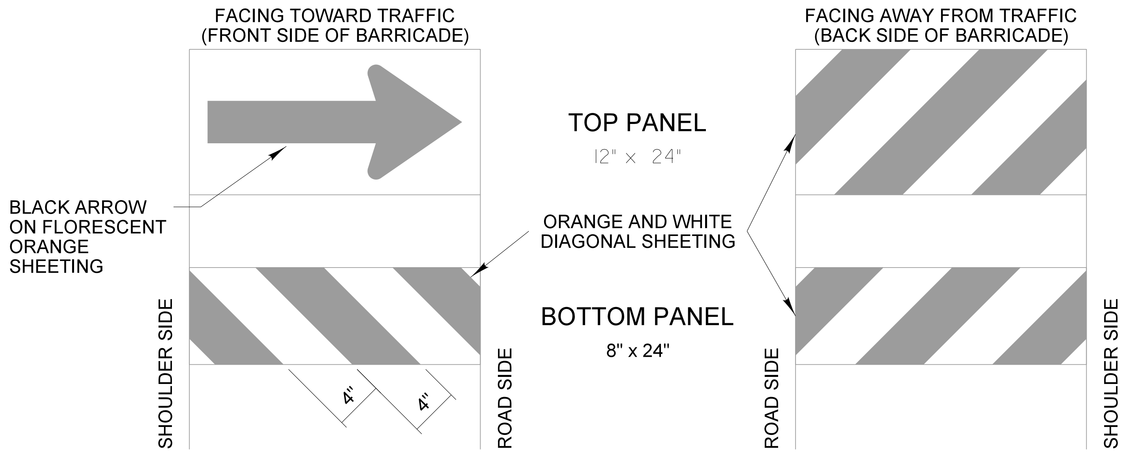

GENERAL NOTES

1) Direction Indicator Barricades shall be constructed from non-metallic Type II barricades meeting the requirements of Article 1106.02 of the Standard Specifications, except where modified by this detail.
2) The Direction Indicator Barricades shall be equipped with Type C steady burning lights if used to channelize traffic during the hours of darkness.
3) The reflective sheeting for the top panel shall be Type AZ fluorescent orange. The diagonal panels shall have orange and white Type A or better reflective sheeting.

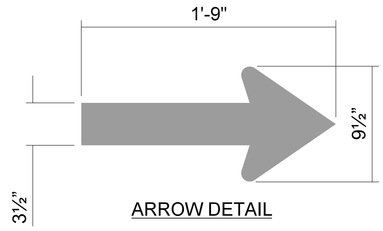

ARROW DETAIL

REVISIONS	DATE
Text Update	7/15/11

LakeCounty Division of Transportation

APPROVED BY: ANTHONY KHAWAJA
DATE: APRIL 1, 2007

TYPICAL APPLICATION OF TRAFFIC CONTROL DEVICES
HIGHWAY CONSTRUCTION, CONTRACT MAINTENANCE

DIRECTION INDICATOR BARRICADES

LC7200

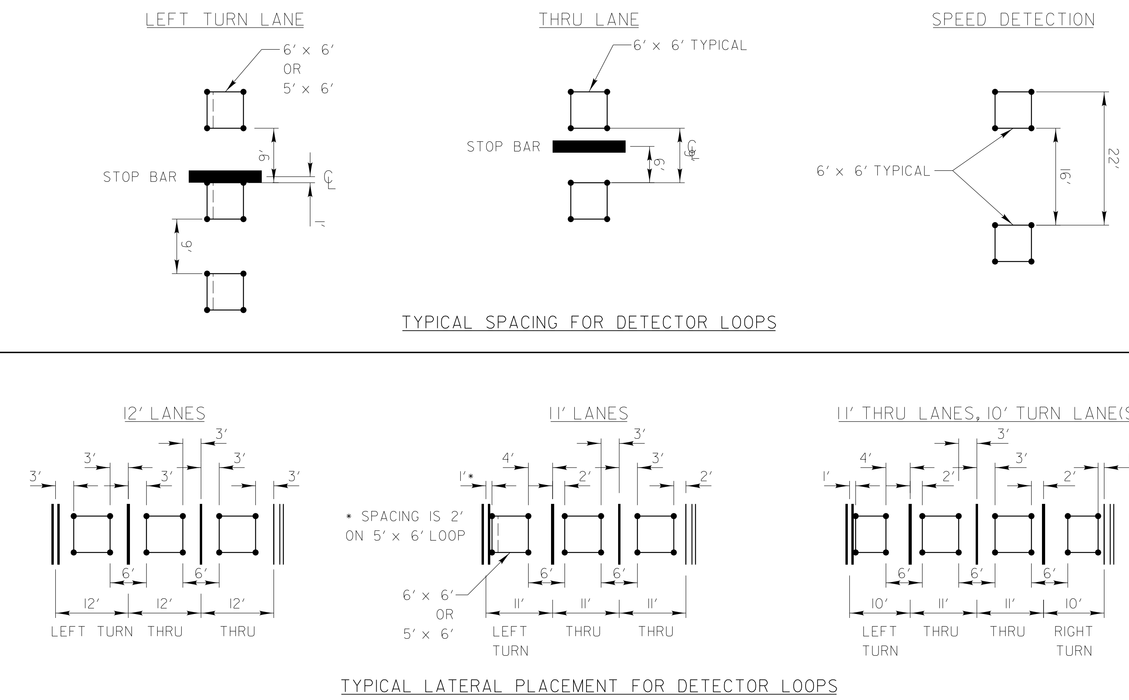

REVISIONS	DATE

LakeCounty Division of Transportation

APPROVED BY: A. KHAWAJA
DATE: APRIL 1, 2007

TYPICAL DETECTOR
LOOP LAYOUTS

LC8600

NO.	REVISIONS / REMARKS DESCRIPTION	DATE	BY
		/ /	SURVEYOR:
		/ /	DSGNR/LIAISON:
			PLOTTED BY:
		hdr.mc 2/18/2016	/

FILE NAME: U:\Design\Sullivan\Ela Rd Sidewalk\Plan Sheets.dgn

0 20 40

LakeCounty Division of Transportation

ELA ROAD RESURFACING
LAKE COUNTY STANDARDS & DETAILS

ROUTE	SECTION	SECTION NUMBER	SHEET	SHEETS
CH60	144	15-00144-21-RS	106	150

TYPICAL PAVEMENT MARKINGS

TYPICAL MINI-SKIP PAVEMENT MARKINGS

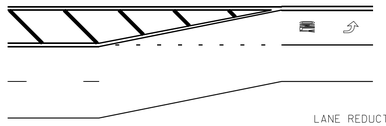

LANE REDUCTION

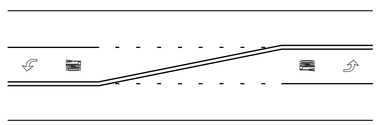

DOUBLE TAPER

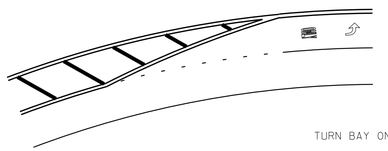

TURN BAY ON CURVE

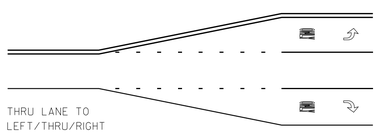

THRU LANE TO
LEFT/THRU/RIGHT

MINI-SKIPS ARE 2 FEET WHITE LINE WITH 6 FEET SPACING. THE MINI-SKIP IS THE SAME WIDTH AS THE PAVEMENT MARKING LINE. IT EXTENDS.

EDGE LINE RADII AT SIDE STREETS

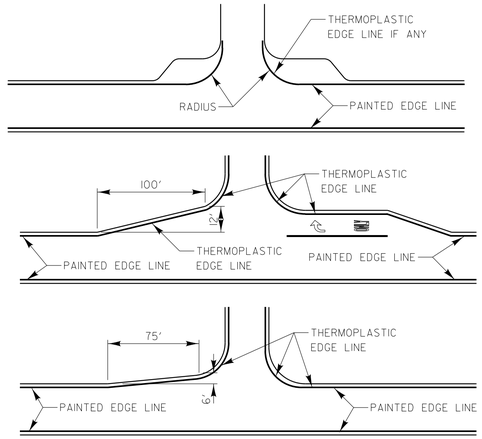

LANE REDUCTION ARROW PLACEMENT

REFERENCE:
1. MANUAL ON UNIFORM TRAFFIC CONTROL DEVICES, 2009 EDITION (USDOT-FHWA), TABLE 2C-4, CONDITION "A".

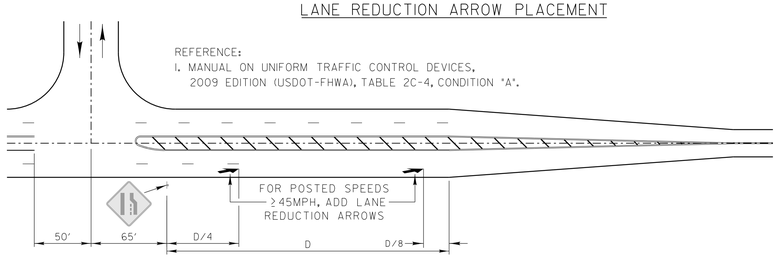

DESIGN SPEED MPH	D (FEET)
<45	N/A
45	775' [1]
50	885' [1]
55	990' [1]

TYPCIAL TURN BAY PAVEMENT MARKINGS

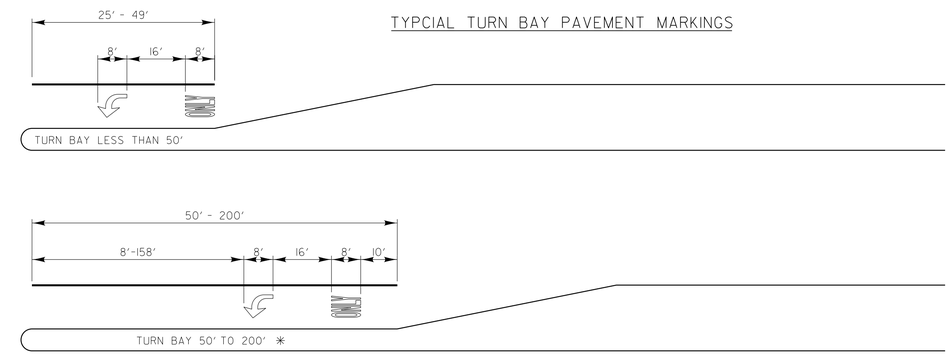

✳ AT INTERSECTIONS WITH VIDEO DETECTION, THE ARROW AND ONLY PAVEMENT MARKINGS SHALL BE A MINIMUM OF 30' BEHIND THE STOP BAR.

AREA = 15.6 SQ. FT.

ONLY AREA = 20.8 SQ FT.

FULL SIZE LETTERS (8') AND ARROWS SHALL BE USED. TURN LANES IN EXCESS OF 400' IN LENGTH MAY HAVE AN ADDITIONAL SET OF ARROW W/ "ONLY" INSTALLED MIDWAY BETWEEN THE OTHER TWO SETS OF ARROW W/ "ONLY".

TWO LANE ROAD

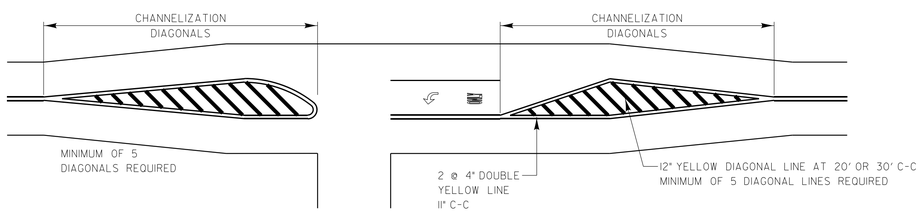

TWO-WAY LEFT TO LEFT TURN BAY

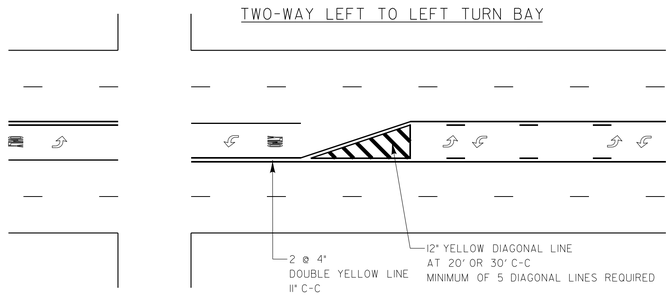

TYPICAL DIAGONAL SPACING

DIAGONAL SPACING

SPEED LIMIT RANGE	CONTINUOUS	INTERSECTION CHANNELIZATION
30-45 MPH	75 FT.	20 FT.
OVER 45 MPH	150 FT.	30 FT.

DUAL LEFT TURN ARROWS

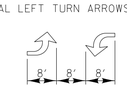

31.2 SQ. FT. MINIMUM
OF 2 SETS REQUIRED

A MINIMUM OF TWO PAIRS OF DUAL LEFT TURN ARROWS SHALL BE USED. THE DUAL LEFT TURN ARROWS SHALL BE WHITE IN COLOR. THE INTERVAL BETWEEN SETS OF DUAL LEFT TURN ARROWS SHOULD BE 200' AND 300'.

3 OR 5 LANE ROAD

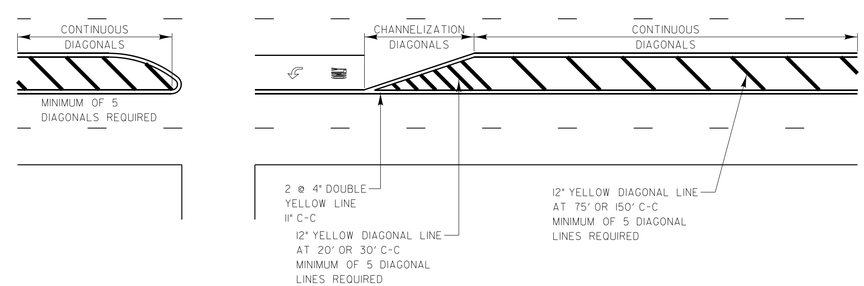

REVISIONS	DATE
SEPARATED RAILROAD SHEET	06/02/08
ADDED LANE REDUCTION ARROWS	07/1/12

LakeCounty Division of Transportation

APPROVED BY: A. KHAWAJA
DATE: APRIL 1, 2007

TYPICAL PAVEMENT MARKINGS FOR COUNTY HIGHWAYS

SHEET 1 OF 2

LC7800

REVISIONS / REMARKS					
NO.	DESCRIPTION	DATE	BY	SURVEYOR:	/
		/ /		DSGNR/LIAISON:	
		/ /		PLOTTED BY:	hdrmc 2/18/2016

LakeCounty Division of Transportation

ELA ROAD RESURFACING

LAKE COUNTY STANDARDS & DETAILS

ROUTE	SECTION	SECTION NUMBER	SHEET	SHEETS
CH60	144	15-00144-21-RS	107	150

FILE NAME: U:\Design\Sullivan\Ela Rd Sidewalk\Plan Sheets.dgn

TYPICAL PAVEMENT MARKINGS AND RAISED PAVEMENT MARKERS

THRU LANE TO TURN LANE CONVERSION

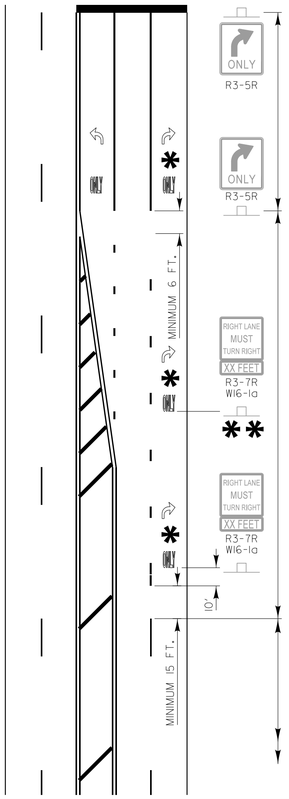

TURN LANE
6" WHITE LINE
(ADDITIONAL PAVEMENT MARKINGS AS SHOWN ON SHEET ONE OF THE L.C.D.O.T TYPICAL PAVEMENT MARKINGS DETAIL SHEETS)

TRANSITION ZONE
6" WHITE 3'/12' SKIP DASH LANE LINE

THRU LANE
4 " WHITE 10'/30' SKIP DASH LANE LINE

MINIMUM TRANSITION ZONE LENGTH

POSTED SPEED	LENGTH
25 M.P.H.	255 FT
30 M.P.H.	330 FT
35 M.P.H.	405 FT
40 M.P.H.	480 FT
45 M.P.H.	555 FT
50 M.P.H.	630 FT
55 M.P.H.	705 FT

* LOCATION OF PAV'T MARKINGS

(MEASURED FROM BEGINNING OF TRANSITION ZONE)

POSTED SPEED	LOCATION OF PAV'T MARKINGS
25 M.P.H.	10 FT, 260 FT
30 M.P.H.	10 FT, 170 FT, 340 FT
35 M.P.H.	10 FT, 210 FT, 410 FT
40 M.P.H.	10 FT, 170FT, 330 FT, 490 FT
45 M.P.H.	10 FT, 190 FT, 370 FT, 560 FT
50 M.P.H.	10 FT, 170 FT, 330 FT, 490 FT, 640 FT
55 M.P.H.	10 FT, 180 FT, 350 FT, 520 FT, 710 FT

** FOR POSTED SPEEDS 40 M.P.H. OR GREATER A SECOND R3-7/W16-1a SIGN INSTALLATION SHALL BE LOCATED HALFWAY BETWEEN THE BEGINNING OF THE TRANSITION ZONE AND THE BEGINNING OF THE TURN LANE

PAVEMENT MARKING GUIDELINES

TYPE OF MARKING	WIDTH OF LINE	PATTERN	COLOR	SPACING / REMARKS
CENTERLINE OF 2 LANE PAVEMENT	4 IN.	SKIP-DASH	YELLOW	10 FT. LINE WITH 30 FT. SPACE
NO PASSING ZONE LINES: FOR ONE DIRECTION FOR BOTH DIRECTIONS	4 IN. 2 @ 4 IN.	SOLID SOLID	YELLOW YELLOW	5 1/2 IN. C-C FROM SKIP-DASH CENTERLINE 11 IN. C-C (OMIT SKIP-DASH CENTERLINE BETWEEN)
CENTERLINE ON MULTI-LANE UNDIVIDED	2 @ 4 IN.	SOLID	YELLOW	11 IN. C-C
LANE LINES	4 IN.	SKIP-DASH	WHITE	10 FT. LINE WITH 30 FT. SPACE
DOTTED LINES (EXTENSIONS OF CENTER, LANE OR TURN LANE MARKINGS)	SAME AS LINE BEING EXTENDED	SKIP-DASH	SAME AS LINE BEING EXTENDED	2 FT. LINE WITH 6 FT. SPACE
EDGE LINES	5 IN. WHITE 4 IN. YELLOW	SOLID	WHITE - RIGHT YELLOW - LEFT	OUTLINE RAISED MEDIANS IN YELLOW
TURN LANE MARKINGS	6 IN. LINE FULL SIZE LETTERS AND SYMBOLS (8 FT.)	SOLID	WHITE	TURN ARROW 15.6 SQ. FT. STRAIGHT ARROW 11.5 SQ. FT. ONLY 20.8 SQ. FT. COMB. ARROW 26.0 SQ. FT.
TWO WAY LEFT TURN MARKING	2 @ 4 IN. EACH DIRECTION 8 FT. LEFT ARROW	SKIP-DASH AND SOLID IN PAIRS	YELLOW WHITE	10 FT. LINE WITH 30 FT. SPACE FOR SKIP-DASH 5 1/2 IN. C-C BETWEEN SKIP-DASH LINE AND SOLID LINE SEE TYPICAL TWO-WAY LEFT TURN MARKING DETAIL
CROSSWALK	12 IN. @ 90°	SOLID	WHITE	12 IN. LONGITUDINAL BAR WITH 24 IN. SPACE 6 FT. TO 12 FT. WIDE SEE TYPICAL CROSSWALK MARKING DETAIL
STOP BARS	24 IN.	SOLID	WHITE	PLACE 4 FT. IN ADVANCE OF AND PARALLEL TO CROSSWALK, IF PRESENT, OTHERWISE PLACE AT DESIRED STOPPING POINT.
PAINTED MEDIANS	2 @ 4 IN. & 11 IN. C-C 12 IN. DIAGONALS @ 45° NO DIAGONALS USED FOR 4 FT. WIDE MEDIAN	SOLID	YELLOW: 2-WAY TRAFFIC WHITE: 1-WAY TRAFFIC	11 IN. C-C FOR THE DOUBLE LINE SEE TYPICAL PAINTED MEDIAN MARKING DETAIL MINIMUM OF 5 DIAGONALS
GORE MARKING AND CHANNELIZING LINES	8 IN. WITH 12 IN. DIAGONALS @ 45°	SOLID	WHITE	DIAGONALS 15 FT. C-C (LESS THAN 30 M.P.H.) 20 FT. C-C (30 TO 45 M.P.H.) 30 FT. C-C (OVER 45 M.P.H.) MINIMUM OF 5 DIAGONALS
R.R. CROSSING	24 IN. TRANSVERSE LINES RR IS 6 FT. LETTER 16 IN. LINE FOR "X"	SOLID	WHITE	SEE I.D.O.T. STD. 78000I SQ. FT. AREA OF: "R" = 3.6 SQ. FT. / "R" "X" = 54.0 SQ. FT.
SHOULDER DIAGONALS	12 IN. @ 45°	SOLID	WHITE - RIGHT YELLOW - LEFT	50 FT. C-C (LESS THAN 30 M.P.H.) 75 FT. C-C (30 TO 45 M.P.H.) 150 FT. C-C (OVER 45 M.P.H.) MINIMUM OF 5 DIAGONALS

FOR FURTHER DETAILS ON PAVEMENT MARKING REFER TO PART III "MARKINGS" IN THE "ILLINOIS MANUAL ON UNIFORM TRAFFIC CONTROL DEVICES", THE "STANDARD SPECIFICATIONS FOR ROAD AND BRIDGE CONSTRUCTION", AND THE LATEST I.D.O.T. HIGHWAY STANDARD 78000I.

TYPICAL RAISED PAVEMENT MARKER INSTALLATION

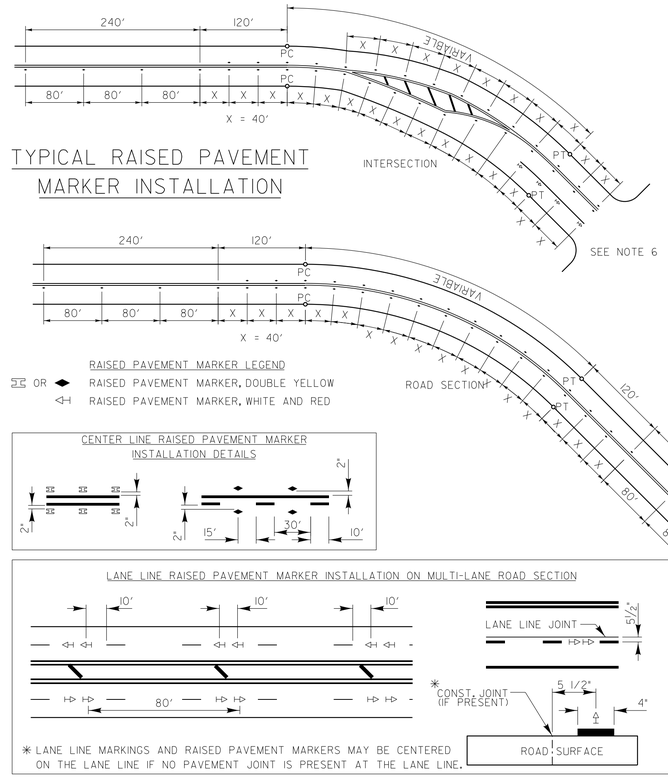

RAISED PAVEMENT MARKER LEGEND

OR RAISED PAVEMENT MARKER, DOUBLE YELLOW

RAISED PAVEMENT MARKER, WHITE AND RED

CENTER LINE RAISED PAVEMENT MARKER INSTALLATION DETAILS

LANE LINE RAISED PAVEMENT MARKER INSTALLATION ON MULTI-LANE ROAD SECTION

* LANE LINE MARKINGS AND RAISED PAVEMENT MARKERS MAY BE CENTERED ON THE LANE LINE IF NO PAVEMENT JOINT IS PRESENT AT THE LANE LINE.

PAVEMENT CROSS SECTION SHOWING TYPICAL PAVEMENT MARKINGS (2-LANE ROADWAY)

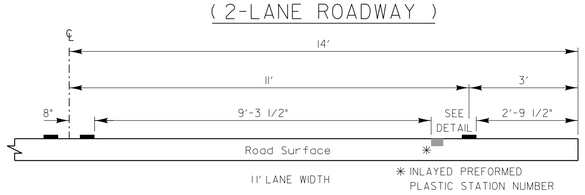

11' LANE WIDTH

* INLAYED PREFORMED PLASTIC STATION NUMBER

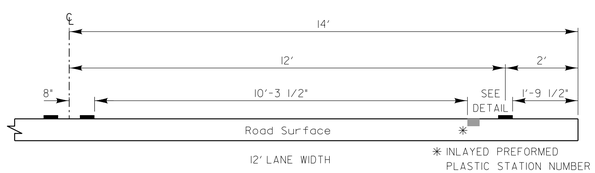

12' LANE WIDTH

* INLAYED PREFORMED PLASTIC STATION NUMBER

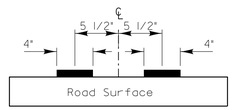

DOUBLE STRIPE CENTERLINE DETAIL

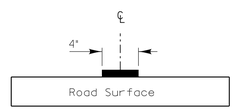

SINGLE STRIPE CENTERLINE DETAIL

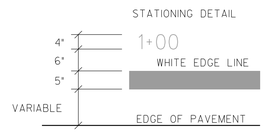

NOTE:
CENTERLINE MARKINGS ARE 4" LINES AT 11' CENTERS.

CROSSWALKS

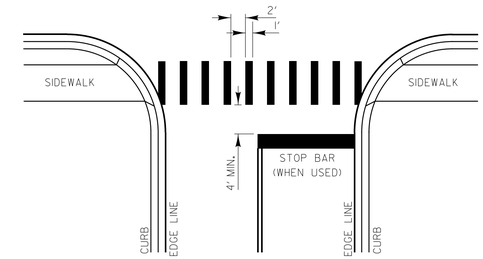

CROSSWALK NOTES:
1. WIDTH OF THE CROSSWALK IS GENERALLY 6' EXCEPT AT SCHOOL CROSSINGS AND BICYCLE CROSSINGS, WHICH CAN BE 8'.
2. THE STOP BAR SHOULD BE INSTALLED A MINIMUM OF 4' IN ADVANCE OF THE CROSSWALK.

CURB MARKING

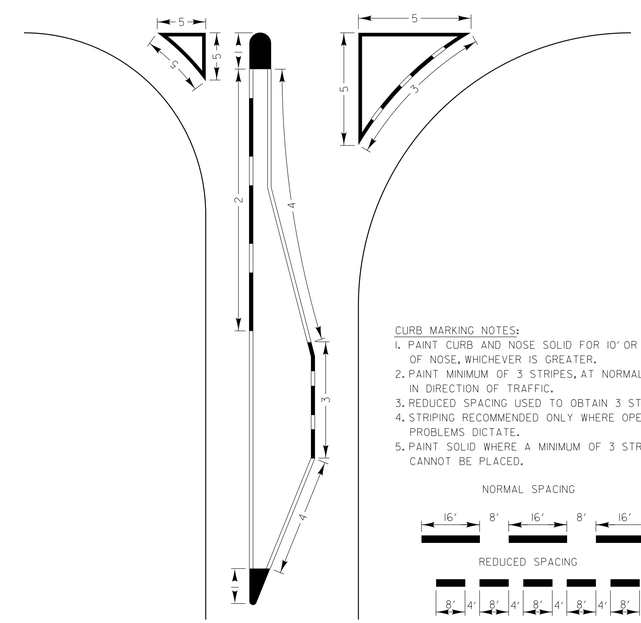

CURB MARKING NOTES:
1. PAINT CURB AND NOSE SOLID FOR 10' OR RADIUS OF NOSE, WHICHEVER IS GREATER.
2. PAINT MINIMUM OF 3 STRIPES, AT NORMAL SPACING, IN DIRECTION OF TRAFFIC.
3. REDUCED SPACING USED TO OBTAIN 3 STRIPE MINIMUM.
4. STRIPING RECOMMENDED ONLY WHERE OPERATIONAL PROBLEMS DICTATE.
5. PAINT SOLID WHERE A MINIMUM OF 3 STRIPES CANNOT BE PLACED.

NORMAL SPACING

REDUCED SPACING

REVISIONS	DATE
SEPARATED RAILROAD SHEET	06/02/08
REVISED RPM DETAILS	07/1/12

LakeCounty Division of Transportation

APPROVED BY: A. KHAWAJA
DATE: APRIL 1, 2007

TYPICAL PAVEMENT MARKINGS FOR COUNTY HIGHWAYS

SHEET 2 OF 2

LC7800

REVISIONS / REMARKS					
NO.	DESCRIPTION	DATE	BY	SURVEYOR:	/
		/ /		DSGNR/LIAISON:	
		/ /		PLOTTED BY:	hdrmc 2/18/2016

LakeCounty Division of Transportation

ELA ROAD RESURFACING

LAKE COUNTY STANDARDS & DETAILS

ROUTE	SECTION	SECTION NUMBER	SHEET	SHEETS
CH60	144	15-00144-21-RS	108	150

FILE NAME: U:\Design\Sullivan\Ela Rd Sidewalk\Plan Sheets.dgn

TYPICAL SHORT TERM PAVEMENT MARKINGS

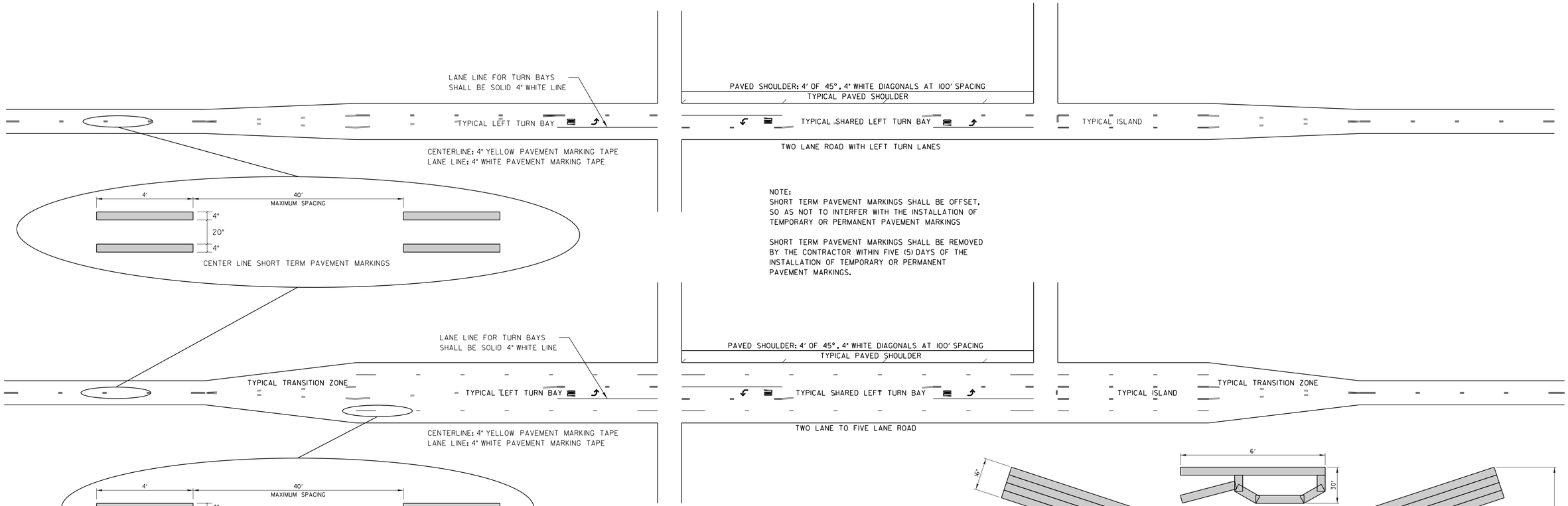

NOTE:
SHORT TERM PAVEMENT MARKINGS SHALL BE OFFSET, SO AS NOT TO INTERFER WITH THE INSTALLATION OF TEMPORARY OR PERMANENT PAVEMENT MARKINGS

SHORT TERM PAVEMENT MARKINGS SHALL BE REMOVED BY THE CONTRACTOR WITHIN FIVE (5) DAYS OF THE INSTALLATION OF TEMPORARY OR PERMANENT PAVEMENT MARKINGS.

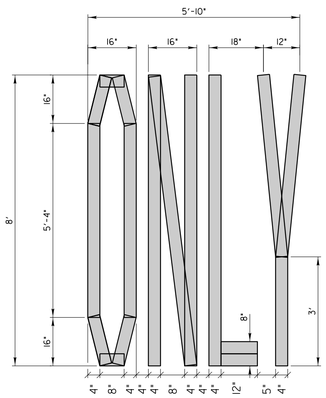

QUANTITY:
4" LINE = 64 FT. (21 SQ. FT.)

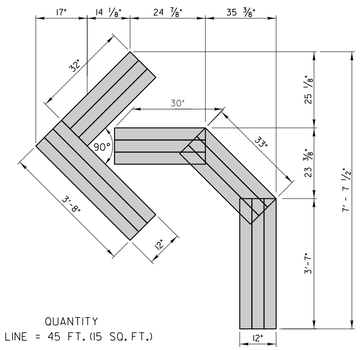

QUANTITY
4" LINE = 45 FT. (15 SQ. FT.)

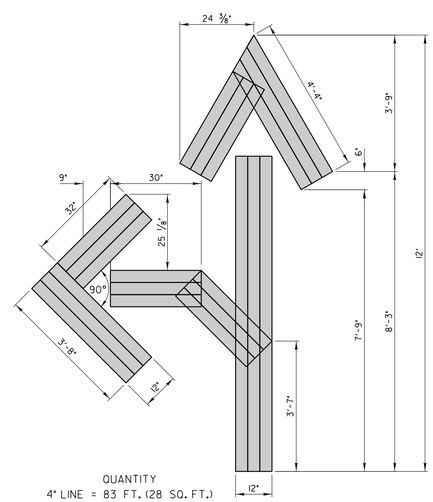

QUANTITY
4" LINE = 83 FT. (28 SQ. FT.)

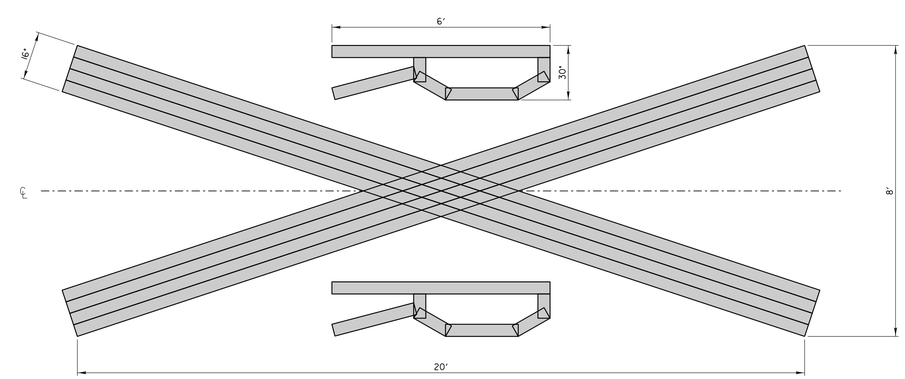

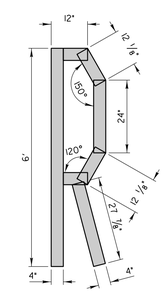

QUANTITY
4" LINE = 200 FT. (67 SQ. FT.)
("X" = 172 FT.)
("R" = 14 FT.)

REVISIONS	DATE
REMOVE DUAL DIMENSIONS	2/18/08

LakeCounty
Division of Transportation

APPROVED BY: A. KHAWAJA
DATE: APRIL 1, 2007

SHORT TERM PAVEMENT MARKINGS

LC7802

REVISIONS / REMARKS					
NO.	DESCRIPTION	DATE	BY	SURVEYOR:	/
		/ /		DSGNR/LIAISON:	
		/ /		PLOTTED BY:	hdrmc 2/18/2016

LakeCounty
Division of Transportation

ELA ROAD RESURFACING
LAKE COUNTY STANDARDS & DETAILS

ROUTE	SECTION	SECTION NUMBER	SHEET	SHEETS
CH60	144	15-00144-21-RS	109	150

FILE NAME: U:\Design\Sullivan\Ela Rd Sidewalk\Plan Sheets.dgn

TYPICAL RAILROAD RELATED PAVEMENT MARKINGS

TYPICAL PLACEMENT OF R.R. WARNING SIGNS AND PAVEMENT MARKINGS ON COUNTY HIGHWAYS

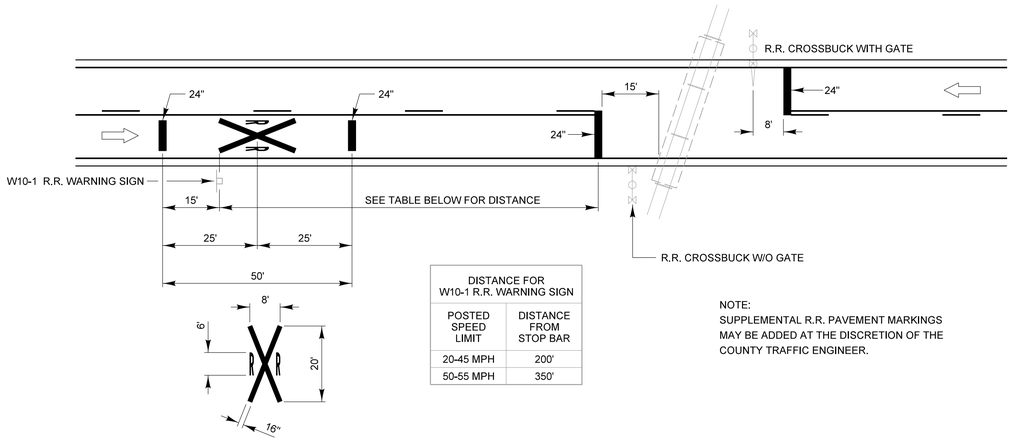

DISTANCE FOR W10-1 R.R. WARNING SIGN	
POSTED SPEED LIMIT	DISTANCE FROM STOP BAR
20-45 MPH	200'
50-55 MPH	350'

NOTE:
SUPPLEMENTAL R.R. PAVEMENT MARKINGS MAY BE ADDED AT THE DISCRETION OF THE COUNTY TRAFFIC ENGINEER.

PAVEMENT MARKINGS FOR R.R. CROSSINGS AT SIGNALIZED INTERSECTIONS GREATER THAN 81 FEET - 300 FEET

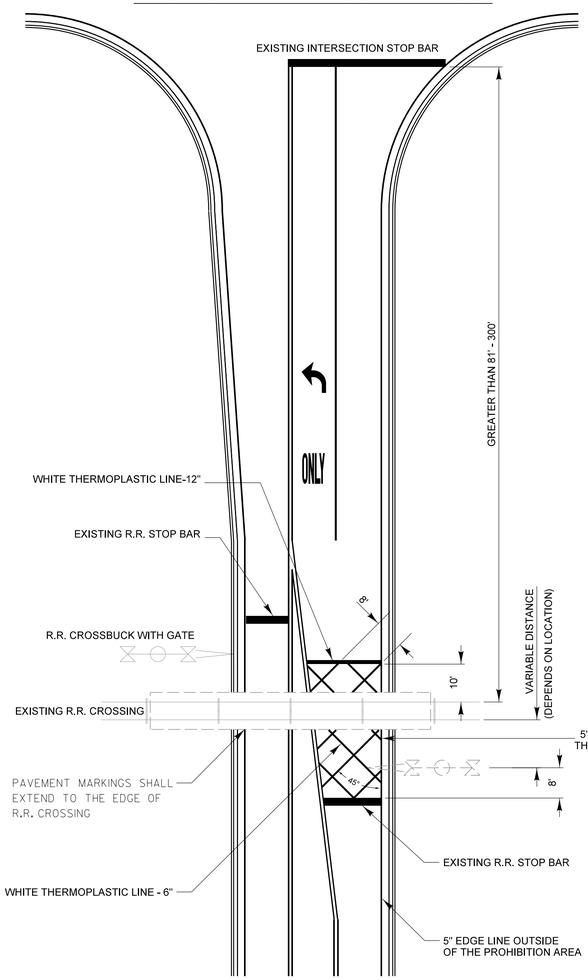

NOTE: DISTANCES GREATER THAN 300 FT MAY BE MARKED ACCORDING TO "TYPICAL PLACEMENT OF R.R. WARNING SIGNS AND PAVEMENT MARKINGS ON COUNTY HIGHWAYS".

PAVEMENT MARKINGS FOR R.R. CROSSINGS AT NON-SIGNALIZED INTERSECTIONS 81 FEET OR LESS

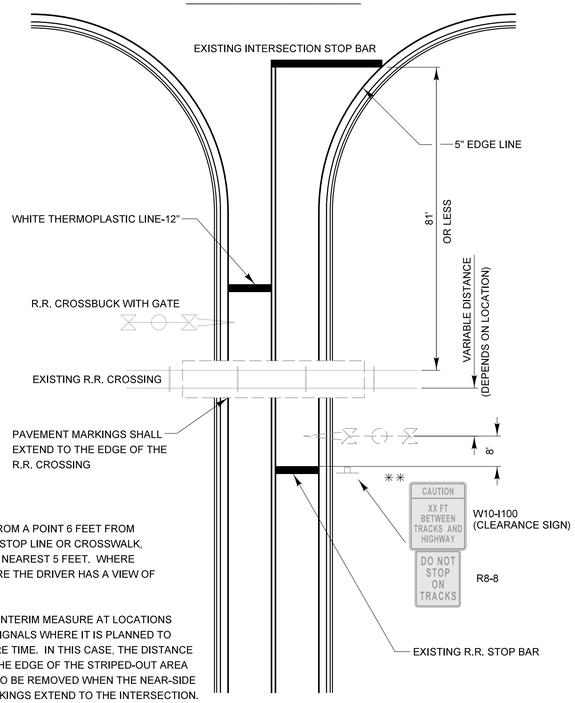

**
NOTE:
DISTANCE TO BE SHOWN ON SIGN IS MEASURED FROM A POINT 6 FEET FROM THE RAIL CLOSEST TO THE INTERSECTION TO THE STOP LINE OR CROSSWALK, WHICHEVER IS CLOSEST, ROUNDED DOWN TO THE NEAREST 5 FEET. WHERE THERE IS NO STOP LINE, MEASURE TO POINT WHERE THE DRIVER HAS A VIEW OF APPROACHING TRAFFIC.

THE CLEARANCE SIGN IS ALSO TO BE USED AS AN INTERIM MEASURE AT LOCATIONS WITH INTERCONNECTED INTERSECTION TRAFFIC SIGNALS WHERE IT IS PLANNED TO CHANGE THEM TO NEAR-SIDE SIGNALS AT A FUTURE TIME. IN THIS CASE, THE DISTANCE TO BE SHOWN ON THE SIGN IS MEASURED FROM THE EDGE OF THE STRIPED-OUT AREA INSTEAD OF 6-FEET FROM THE RAIL. THE SIGN IS TO BE REMOVED WHEN THE NEAR-SIDE SIGNALS ARE INSTALLED AND THE PAVEMENT MARKINGS EXTEND TO THE INTERSECTION.

PAVEMENT MARKINGS FOR R.R. CROSSINGS AT SIGNALIZED INTERSECTIONS 81 FEET OR LESS

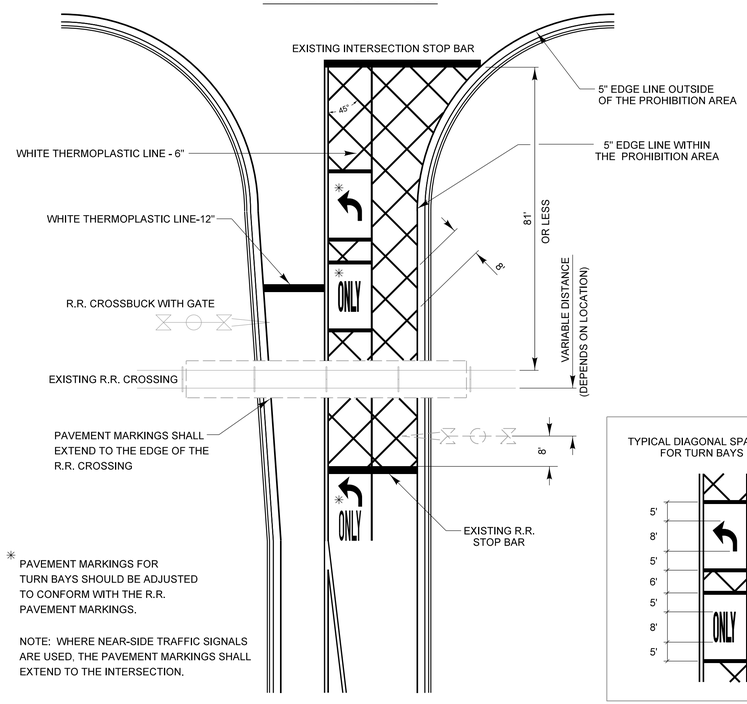

* PAVEMENT MARKINGS FOR TURN BAYS SHOULD BE ADJUSTED TO CONFORM WITH THE R.R. PAVEMENT MARKINGS.

NOTE: WHERE NEAR-SIDE TRAFFIC SIGNALS ARE USED, THE PAVEMENT MARKINGS SHALL EXTEND TO THE INTERSECTION.

TYPICAL DIAGONAL SPACING FOR TURN BAYS

REVISIONS	DATE
Separated Railroad Sheet	06/02/08
Reformat LCDOT Standard	07/15/10
Revised to IDOT DI Standard	07/1/12

LakeCounty Division of Transportation

APPROVED BY: A. KHAWAJA
DATE: June 2, 2008

TYPICAL PAVEMENT MARKINGS FOR RAILROAD CROSSINGS ON COUNTY HIGHWAYS

LC7803

REVISIONS / REMARKS					
NO.	DESCRIPTION	DATE	BY	SURVEYOR:	/
1	REVISED TO IDOT DI TYPICAL X-ING	6/12/12	DWK	DSGNR/LIAISON:	
		/ /		PLOTTED BY:	hdrmc 2/18/2016

LakeCounty Division of Transportation

ELA ROAD RESURFACING
LAKE COUNTY STANDARDS & DETAILS

ROUTE	SECTION	SECTION NUMBER	SHEET	SHEETS
CH60	144	15-00144-21-RS	110	150

FILE NAME: U:\Design\Sullivan\Ela Rd Sidewalk\Plan Sheets.dgn

ABV	ABOVE
A/C	ACCESS CONTROL
AC	ACRE
ADJ	ADJUST
AS	AERIAL SURVEYS
AGG	AGGREGATE
AH	AHEAD
APT	APARTMENT
ASPH	ASPHALT
AUX	AUXILIARY
AGS	AUXILIARY GAS VALVE (SERVICE)
AVE	AVENUE
AX	AXIS OF ROTATION
BK	BACK
B-B	BACK TO BACK
BKPL	BACKPLATE
B	BARN
BARR	BARRICADE
BGN	BEGIN
BM	BENCHMARK
BIND	BINDER
BIT	BITUMINOUS
BTM	BOTTOM
BLVD	BOULEVARD
BRK	BRICK
BBOX	BUFFALO BOX
BLDG	BUILDING
CIP	CAST IRON PIPE
CB	CATCH BASIN
C-C	CENTER TO CENTER
CL	CENTERLINE OR CLEARANCE
CL-E	CENTERLINE TO EDGE
CL-F	CENTERLINE TO FACE
CTS	CENTERS
CERT	CERTIFIED
CHSLD	CHISELED
CS	CITY STREET
CP	CLAY PIPE
CLSD	CLOSED
CLID	CLOSED LID
CT	COAT OR COURT
COMB	COMBINATION
C	COMMERCIAL BUILDING
CE	COMMERCIAL ENTRANCE
CONC	CONCRETE
CONST	CONSTRUCT
CONTD	CONTINUED
CONT	CONTINUOUS
COR	CORNER
CORR	CORRUGATED
CMP	CORRUGATED METAL PIPE
CNTY	COUNTY
CH	COUNTY HIGHWAY
CSE	COURSE
XSECT	CROSS SECTION
m^3	CUBIC METER
mm^3	CUBIC MILLIMETER
CU YD	CUBIC YARD
CULV	CULVERT
C&G	CURB & GUTTER
D	DEGREE OF CURVE
DC	DEPRESSED CURVE
DET	DETECTOR
DIA	DIAMETER
DIST	DISTRICT
DOM	DOMESTIC
DBL	DOUBLE
DSEL	DOWNSTREAM ELEVATION
DSFL	DOWNSTREAM FLOWLINE
DR	DRAINAGE OR DRIVE
DI	DRAINAGE INLET OR DROP INLET
DRV	DRIVEWAY
DCT	DUCT
EA	EACH
EB	EASTBOUND
EOP	EDGE OF PAVEMENT
E-CL	EDGE TO CENTERLINE
E-E	EDGE TO EDGE
EL	ELEVATION
ENTR	ENTRANCE
EXC	EXCAVATION
EX	EXISTING
EXPWAY	EXPRESSWAY
E	EXTERNAL DISTANCE OF HORIZONTAL CURVE
E	OFFSET DISTANCE TO VERTICAL CURVE
F-F	FACE TO FACE
FA	FEDERAL AID
FAI	FEDERAL AID INTERSTATE
FAP	FEDERAL AID PRIMARY
FAS	FEDERAL AID SECONDARY
FAUS	FEDERAL AID URBAN SECONDARY
FP	FENCE POST
FE	FIELD ENTRANCE
FH	FIRE HYDRANT
FL	FLOW LINE
FB	FOOT BRIDGE
FDN	FOUNDATION
FR	FRAME
F&G	FRAME & GRATE
FRWAY	FREEWAY
GAL	GALLON
GALV	GALVANIZED
G	GARAGE
GM	GAS METER
GV	GAS VALVE
GRAN	GRANULAR
GR	GRATE
GRVL	GRAVEL
GND	GROUND
GUT	GUTTER
GP	GUY POLE
GW	GUY WIRE
HH	HANDHOLE
HATCH	HATCHING
HD	HEAD
HDW	HEADWALL
HDUTY	HEAVY DUTY
ha	HECTARE
HMA	HOT MIX ASPHALT
HWY	HIGHWAY
HORIZ	HORIZONTAL
HSE	HOUSE
IL	ILLINOIS
IMP	IMPROVEMENT
IN DIA	INCH DIAMETER
INL	INLET
INST	INSTALLATION
IDS	INTERSECTION DESIGN STUDY
INV	INVERT
IP	IRON PIPE
IR	IRON ROD
JT	JOINT
kg	KILOGRAM
km	KILOMETER
LS	LANDSCAPING
LN	LANE
LT	LEFT
LP	LIGHT POLE
LGT	LIGHTING
LF	LINEAL FEET OR LINEAR FEET
L	LITER OR CURVE LENGTH
LC	LONG CHORD
LNG	LONGITUDINAL
L SUM	LUMP SUM
MACH	MACHINE
MB	MAIL BOX
MH	MANHOLE
MATL	MATERIAL
MED	MEDIAN
m	METER
METH	METHOD
M	MID-ORDINATE
mm	MILLIMETER
mm DIA	MILLIMETER DIAMETER
MIX	MIXTURE
MBH	MOBILE HOME
MOD	MODIFIED
MFT	MOTOR FUEL TAX
N & BC	NAIL & BOTTLE CAP
N & C	NAIL & CAP
N & W	NAIL & WASHER
NOAA	NATIONAL OCEANIC ATMOSPHERIC ADMINISTRATION
NC	NORMAL CROWN
NB	NORTHBOUND
NE	NORTHEAST
NW	NORTHWEST
OLID	OPEN LID
PAT	PATTERN
PVD	PAVED
PVMT	PAVEMENT
PM	PAVEMENT MARKING
PED	PEDESTAL
PNT	POINT
PC	POINT OF CURVATURE
PI	POINT OF INTERSECTION OF HORIZONTAL CURVE
PRC	POINT OF REVERSE CURVE
PT	POINT OF TANGENCY
POT	POINT ON TANGENT
POLYETH	POLYETHYLENE
PCC	PORTLAND CEMENT CONCRETE
PP	POWER POLE OR PRINCIPAL POINT
PRM	PRIME
PE	PRIVATE ENTRANCE
PROF	PROFILE
PGL	PROFILE GRADELINE
PROJ	PROJECT
P.C.	PROPERTY CORNER
PL	PROPERTY LINE
PR	PROPOSED
R	RADIUS
RR	RAILROAD
RRS	RAILROAD SPIKE
RPS	REFERENCE POINT STAKE
REF	REFLECTIVE
RCCP	REINFORCED CONCRETE CULVERT PIPE
REINF	REINFORCEMENT
REM	REMOVAL
RC	REMOVE CROWN
REP	REPLACEMENT
REST	RESTAURANT
RESURF	RESURFACING
RET	RETAINING
RT	RIGHT
ROW	RIGHT-OF-WAY
RD	ROAD
RDWY	ROADWAY
RTE	ROUTE
SAN	SANITARY
SANS	SANITARY SEWER
SEC	SECTION
SEED	SEEDING
SHAP	SHAPING
S	SHED
SH	SHEET
SHLD	SHOULDER
SW	SIDEWALK OR SOUTHWEST
SIG	SIGNAL
SOD	SODDING
SM	SOLID MEDIAN
SB	SOUTHBOUND
SE	SOUTHEAST
SPL	SPECIAL
SD	SPECIAL DITCH
SQ FT	SQUARE FEET
m^2	SQUARE METER
mm^2	SQUARE MILLIMETER
SQ YD	SQUARE YARD
STB	STABILIZED
STD	STANDARD
SBI	STATE BOND ISSUE
SR	STATE ROUTE
STA	STATION
SPBGR	STEEL PLATE BEAM GUARDRAIL
SS	STORM SEWER
STY	STORY
ST	STREET
STR	STRUCTURE
e	SUPERELEVATION RATE
S.E. RUN.	SUPERELEVATION RUNOFF LENGTH
SURF	SURFACE
SMK	SURVEY MARKER
T	TANGENT DISTANCE
T.R.	TANGENT RUNOUT DISTANCE
TEL	TELEPHONE
TB	TELEPHONE BOX
TP	TELEPHONE POLE
TEMP	TEMPORARY
TBM	TEMPORARY BENCH MARK
TD	TILE DRAIN
TBE	TO BE EXTENDED
TBR	TO BE REMOVED
TBS	TO BE SAVED
TWP	TOWNSHIP
TR	TOWNSHIP ROAD
TS	TRAFFIC SIGNAL
TSCB	TRAFFIC SIGNAL CONTROL BOX
TSC	TRAFFIC SYSTEMS CENTER
TRVS	TRANSVERSE
TRVL	TRAVEL
TRN	TURN
TY	TYPE
T-A	TYPE A
TYP	TYPICAL
UNDGND	UNDERGROUND
USGS	U.S. GEOLOGICAL SURVEY
USEL	UPSTREAM ELEVATION
USFL	UPSTREAM FLOWLINE
UTIL	UTILITY
VBOX	VALVE BOX
VV	VALVE VAULT
VLT	VAULT
VEH	VEHICLE
VP	VENT PIPE
VERT	VERTICAL
VC	VERTICAL CURVE
VPC	VERTICAL POINT OF CURVATURE
VPI	VERTICAL POINT OF INTERSECTION
VPT	VERTICAL POINT OF TANGENCY
WM	WATER METER
WV	WATER VALVE
WMAIN	WATER MAIN
WB	WESTBOUND
WILDFL	WILDFLOWERS
W	WITH
WO	WITHOUT

Illinois Department of Transportation

PASSED January 1, 2011
Michael Brand
ENGINEER OF POLICY AND PROCEDURES

APPROVED January 1, 2011
ENGINEER OF DESIGN AND ENVIRONMENT

ISSUED 1-1-97

DATE	REVISIONS
1-1-11	Updated abbreviations
	and symbols.
1-1-08	Updated abbreviations
	and symbols.

STANDARD SYMBOLS, ABBREVIATIONS AND PATTERNS

(Sheet 1 of 8)

STANDARD 000001–06

ADJUSTMENT ITEMS

	EX	PR
Structure To Be Adjusted		ADJ
Structure To Be Cleaned		C
Main Structure To Be Filled		FM
Structure To Be Filled		F
Structure To Be Filled Special		FSP
Structure To Be Removed		R
Structure To Be Reconstructed		REC
Structure To Be Reconstructed Special		RSP
Frame and Grate To Be Adjusted		A
Frame and Lid To Be Adjusted		A
Domestic Service Box To Be Adjusted		A
Valve Vault To Be Adjusted		A
Special Adjustment		SP
Item To Be Abandoned		AB
Item To Be Moved		M
Item To Be Relocated		REL
Pavement Removal and Replacement		

Illinois Department of Transportation

PASSED January 1, 2011
Michael Brand
ENGINEER OF POLICY AND PROCEDURES
APPROVED January 1, 2011
ENGINEER OF DESIGN AND ENVIRONMENT

ISSUED 1-1-97

ALIGNMENT ITEMS

	EX	PR
Baseline		
Centerline		
Centerline Break Circle		
Baseline Symbol		
Centerline Symbol		
PI Indicator		
Point Indicator		
Horizontal Curve Data (Half Size)	CURVE P.I. STA= Δ= D= R= T= L= E= e= T.R.= S.E. RUN= P.C. STA= P.T. STA=	CURVE P.I. STA= Δ= D= R= T= L= E= e= T.R.= S.E. RUN= P.C. STA= P.T. STA=

BOUNDARIES ITEMS

	EX	PR
Dashed Property Line		
Solid Property/Lot Line		
Section/Grant Line		
Quarter Section Line		
Quarter/Quarter Section Line		
County/Township Line		
State Line		
Iron Pipe Found		
Iron Pipe Set		
Survey Marker		
Property Line Symbol		
Same Ownership Symbol (Half Size)		
Northwest Quarter Corner (Half Size)		
Section Corner (Half Size)		
Southeast Quarter Corner (Half Size)		

CONTOUR ITEMS

	EX	PR
Approx. Index Line		
Approx. Intermediate Line		
Index Contour		
Intermediate Contour		

DRAINAGE ITEMS

	EX	PR
Channel or Stream Line		
Culvert Line		
Grading & Shaping Ditches		
Drainage Boundary Line		
Paved Ditch		
Aggregate Ditch		
Pipe Underdrain		
Storm Sewer		
Flowline		
Ditch Check		
Headwall		
Inlet		
Manhole		
Summit		
Roadway Ditch Flow		
Swale		
Catch Basin		
Culvert End Section		
Water Surface Indicator		
Riprap		

STANDARD SYMBOLS, ABBREVIATIONS AND PATTERNS

(Sheet 2 of 8)

STANDARD 000001–06

EROSION & SEDIMENT CONTROL ITEMS

	EX	PR
Cleaning & Grading Limits		
Dike		
Erosion Control Fence		
Perimeter Erosion Barrier		
Temporary Fence		
Ditch Check Temporary		
Ditch Check Permanent		
Inlet & Pipe Protection		
Sediment Basin		
Erosion Control Blanket		
Fabric Formed Concrete Revetment Mat		
Turf Reinforcement Mat		
Mulch Temporary		
Mulch Method 1		
Mulch Method 2 Stabilized		
Mulch Method 3 Hydraulic		

NON–HIGHWAY IMPROVEMENT ITEMS

	EX	PR
Noise Attn./Levee		
Field Line		
Fence		
Base of Levee		
Mailbox		
Multiple Mailboxes		
Pay Telephone		
Advertising Sign		

LANDSCAPING ITEMS

	EX	PR
Contour Mounding Line		
Fence		
Fence Post		
Shrubs		
Mowline		
Perennial Plants		
Seeding Class 2		
Seeding Class 2A		
Seeding Class 4		
Seeding Class 4 & 5 Combined		

EXISTING LANDSCAPING ITEMS (contd.)

	EX	PR
Seeding Class 5		
Seeding Class 7		
Seedlings Type 1		
Seedlings Type 2		
Sodding		
Mowstake w/Sign		
Tree Trunk Protection		
Evergreen Tree	E	
Shade Tree	E	+

LIGHTING

	EX	PR
Duct		
Conduit		
Electrical Aerial Cable	A	A
Electrical Buried Cable	L	L
Controller		
Underpass Luminaire		
Power Pole		

Illinois Department of Transportation

PASSED January 1, 2011

Michael Brand
ENGINEER OF POLICY AND PROCEDURES

APPROVED January 1, 2011

ENGINEER OF DESIGN AND ENVIRONMENT

ISSUED 1-1-97

STANDARD SYMBOLS, ABBREVIATIONS AND PATTERNS

(Sheet 3 of 8)

STANDARD 000001–06

LIGHTING (contd.)

	EX	PR
Pull Point	Ⓟ	Ⓟ
Handhole		
Heavy Duty Handhole	H	H
Junction Box		
Light Unit Comb.		
Electrical Ground		
Traffic Flow Arrow		
High Mast Pole (Half Size)		
Light Unit-1		

PAVEMENT (MISC.)

	EX	PR
Keyed Long. Joint		
Keyed Long. Joint w/Tie Bars		
Sawed Long. Joint w/Tie Bars		
Bituminous Shoulder		
Bituminous Taper		
Stabilized Driveway		
Widening		

PAVEMENT MARKINGS

	EX	PR
Bike Lane Symbol		
Bike Lane Text		BIKE LANE
Handicap Symbol		
RR Crossing		RR
Raised Marker Amber 1 Way		
Raised Marker Amber 2 Way		
Raised Marker Crystal 1 Way		
Two Way Turn Left		
Shoulder Diag. Pattern		
Skip-Dash White		
Skip-Dash Yellow		
Stop Line		
Solid Line		
Double Centerline		
Dotted Lines		
CL 2Ln 2Way RRPM 12.2 m (40') o.c.		
CL 2Ln 2Way RRPM 80' (24.4 m) o.c.		
CL Multilane Div. RRPM 40' (12.2 m) o.c.		
CL Multilane Div. RRPM 80' (24.4 m) o.c.		
CL Multilane Div. Dbl. RRPM 80' (24.4 m) o.c.		
CL Multilane Undiv.		
Two Way Turn Left Line		

Illinois Department of Transportation

PASSED January 1, 2011
Michael Brand
ENGINEER OF POLICY AND PROCEDURES

APPROVED January 1, 2011
Scott E. Stokes
ENGINEER OF DESIGN AND ENVIRONMENT

ISSUED 1-1-97

STANDARD SYMBOLS, ABBREVIATIONS AND PATTERNS

(Sheet 4 of 8)

STANDARD 000001–06

PAVEMENT MARKINGS (contd.)

	EX	PR
Urban Combination Left		
Urban Combination Right		
Urban Left Turn Arrow		
Urban Right Turn Arrow		
Urban Left Turn Only	ONLY	ONLY
Urban Right Turn Only	ONLY	ONLY
Urban Thru Only	ONLY	ONLY
Urban U-Turn		
Urban Combined U-Turn		
Rural Combination Left		
Rural Combination Right		
Rural Left Turn Arrow		
Rural Right Turn Arrow		
Rural Left Turn Only	ONLY	ONLY
Rural Right Turn Only	ONLY	ONLY
Rural Thru Only	ONLY	ONLY

RAILROAD ITEMS	EX	PR
Abandoned Railroad		
Railroad		
Railroad Point		
Control Box		
Crossing Gate		
Flashing Signal		
Railroad Cant. Mast Arm		
Crossbuck		

REMOVAL ITEMS	EX	PR
Removal Tic		
Bituminous Removal		
Hatch Pattern		
Tree Removal Single		

RIGHT OF WAY ITEMS	EX	PR
Future ROW Corner Monument		
ROW Marker		
ROW Line		
Easement		
Temporary Easement		

Illinois Department of Transportation

PASSED January 1, 2011
Michael Brand
ENGINEER OF POLICY AND PROCEDURES
APPROVED January 1, 2011
Scott E. Stokes
ENGINEER OF DESIGN AND ENVIRONMENT

ISSUED 1-1-97

STANDARD SYMBOLS, ABBREVIATIONS AND PATTERNS

(Sheet 5 of 8)

STANDARD 000001–06

RIGHT OF WAY ITEMS (contd.)

	EX	PR
Access Control Line	AC	AC
Access Control Line & ROW	AC	AC
Access Control Line & ROW with Fence	AR	AC
Excess ROW Line		XS

ROADWAY PLAN ITEMS

	EX	PR
Cable Barrier		
Concrete Barrier		
Edge of Pavement		
Bit Shoulders, Medians and C&G Line		
Aggregate Shoulder		
Sidewalks, Driveways		
Guardrail		
Guardrail Post		
Traffic Sign		
Corrugated Median		
Impact Attenuator		
North Arrow with District Office (Half Size)	N	
Match Line		STA. 45+00
Slope Limit Line		
Typical Cross-Section Line		

ROADWAY PROFILES

	EX	PR
P.I. Indicator		
Point Indicator		
Earthworks Balance Point		
Begin Point		
Vert. Curve Data	VPI = ELEV= L = E =	VPI = ELEV= L = E =
Ditch Profile Left Side		
Ditch Profile Right Side		
Roadway Profile Line		
Storm Sewer Profile Left Side		
Storm Sewer Profile Right Side		

SIGNING ITEMS

	EX	PR
Cone, Drum or Barricade		
Barricade Type II		
Barricade Type III		
Barricade With Edge Line		
Flashing Light Sign		
Panels I		
Panels II		
Direction of Traffic		
Sign Flag (Half Size)		

SIGNING ITEMS (contd.)

	EX	PR
Reverse Left W1-4L (Half Size)		
Reverse Right W1-4R (Half Size)		
Two Way Traffic Sign W6-3 (Half Size)		
Detour Ahead W20-2(0) (Half Size)		DETOUR AHEAD
Left Lane Closed Ahead W20-5L(0) (Half Size)		LEFT LANE CLOSED AHEAD
Right Lane Closed Ahead W20-5R(0) (Half Size)		RIGHT LANE CLOSED AHEAD
Road Closed Ahead W20-3(0) (Half Size)		ROAD CLOSED AHEAD
Road Construction Ahead W20-1-(0) (Half Size)		ROAD CONSTRUCTION AHEAD
Single Lane Ahead (Half Size)		SINGLE LANE AHEAD
Transition Left W4-2L (Half Size)		
Transition Right W4-2R (Half Size)		

Illinois Department of Transportation

PASSED January 1, 2011
Michael Brand
ENGINEER OF POLICY AND PROCEDURES

APPROVED January 1, 2011
ENGINEER OF DESIGN AND ENVIRONMENT

ISSUED 1-1-97

STANDARD SYMBOLS, ABBREVIATIONS AND PATTERNS

(Sheet 6 of 8)

STANDARD 000001–06

SIGNING ITEMS (contd.)

	EX	PR
One Way Arrow Lrg. W1-6-(0) (Half Size)		
Two Way Arrow Large W1-7-(0) (Half Size)		
Detour M4-10L-(0) (Half Size)		DETOUR
Detour M4-10R-(0) (Half Size)		DETOUR
One Way Left R6-1L (Half Size)		ONE WAY
One Way Right R6-1R (Half Size)		ONE WAY
Left Turn Lane R3-I100L (Half Size)		LEFT TURN LANE
Keep Left R4-7AL (Half Size)		KEEP LEFT
Keep Left R4-7BL (Half Size)		KEEP LEFT
Keep Right R4-7AR (Half Size)		KEEP RIGHT
Keep Right R4-7BR (Half Size)		KEEP RIGHT
Stop Here On Red R10-6-AL (Half Size)		STOP HERE ON RED
Stop Here On Red R10-6-AR (Half Size)		STOP HERE ON RED
No Left Turn R3-2 (Half Size)		
No Right Turn R3-1 (Half Size)		
Road Closed R11-2 (Half Size)		ROAD CLOSED
Road Closed Thru Traffic R11-2 (Half Size)		ROAD CLOSED TO THRU TRAFFIC

STRUCTURES ITEMS

	EX	PR
Box Culvert Barrel		
Box Culvert Headwall		
Bridge Pier		
Bridge		
Retaining Wall		
Temporary Sheet Piling		

TRAFFIC SHEET ITEMS

	EX	PR
Cable Number		
Left Turn Green	G	G
Left Turn Yellow	Y	Y
Signal Backplate		
Signal Section 8" (200 mm)		
Signal Section 12" (300 mm)		
Walk/Don't Walk Letters	DW W	DW W
Walk/Don't Walk Symbols		

TRAFFIC SIGNAL ITEMS

	EX	PR
Galv. Steel Conduit		
Underground Cable		
Detector Loop Line		
Detector Loop Large		
Detector Loop Small		
Detector Loop Quadrapole		

Illinois Department of Transportation

PASSED January 1, 2011

Michael Brand

ENGINEER OF POLICY AND PROCEDURES

APPROVED January 1, 2011

ENGINEER OF DESIGN AND ENVIRONMENT

ISSUED 1-1-97

STANDARD SYMBOLS, ABBREVIATIONS AND PATTERNS

(Sheet 7 of 8)

STANDARD 000001–06

TRAFFIC SIGNAL ITEMS (contd.)

	EX	PR
Detector Raceway	"E"	
Aluminum Mast Arm		
Steel Mast Arm		
Veh. Detector Magnetic		
Conduit Splice		
Controller		
Gulfbox Junction		
Wood Pole		
Temp. Signal Head		
Handhole		
Double Handhole		
Heavy Duty Handhole	H	H
Junction Box		
Ped. Pushbutton Detector		
Ped. Signal Head		
Power Pole Service		
Priority Veh. Detector		
Signal Head		
Signal Head w/Backplate		
Signal Post		
Closed Circuit TV	C	C
Video Detector System	V	V

Illinois Department of Transportation

PASSED January 1, 2011
Michael Brand
ENGINEER OF POLICY AND PROCEDURES
APPROVED January 1, 2011
ENGINEER OF DESIGN AND ENVIRONMENT

ISSUED 1-1-97

UNDERGROUND UTILITY ITEMS

	EX	PR	ABANDONED
Cable TV	CTV	CTV	CTV
Electric Cable	E	E	E
Fiber Optic	FO	FO	FO
Gas Pipe	G	G	G
Oil Pipe	O	O	O
Sanitary Sewer			
Telephone Cable	T	T	T
Water Pipe	W	W	W

UTILITIES ITEMS

	EX	PR
Controller		
Double Handhole		
Fire Hydrant		
GuyWire or Deadman Anchor		
Handhole		
Heavy Duty Handhole	H	H
Junction Box		
Light Pole		
Manhole		
Pipeline Warning Sign		
Power Pole		
Power Pole with Light		
Sanitary Sewer Cleanout		
Splice Box Above Ground		
Telephone Splice Box Above Ground		
Telephone Pole		

UTILITY ITEMS (contd.)

	EX	PR
Traffic Signal		
Traffic Signal Control Box	TS	
Water Meter		
Water Meter Valve Box		
Profile Line		
Aerial Power Line	A A	A A

VEGETATION ITEMS

	EX	PR
Deciduous Tree		
Bush or Shrub		
Evergreen Tree		
Stump		
Orchard/Nursery Line		
Vegetation Line		
Woods & Bush Line		

WATER FEATURE ITEMS

	EX	PR
Stream or Drainage Ditch		
Waters Edge		
Water Surface Indicator		
Water Point		
Disappearing Ditch		
Marsh		
Marsh/Swamp Boundary		

STANDARD SYMBOLS, ABBREVIATIONS AND PATTERNS

(Sheet 8 of 8)

STANDARD 000001–06

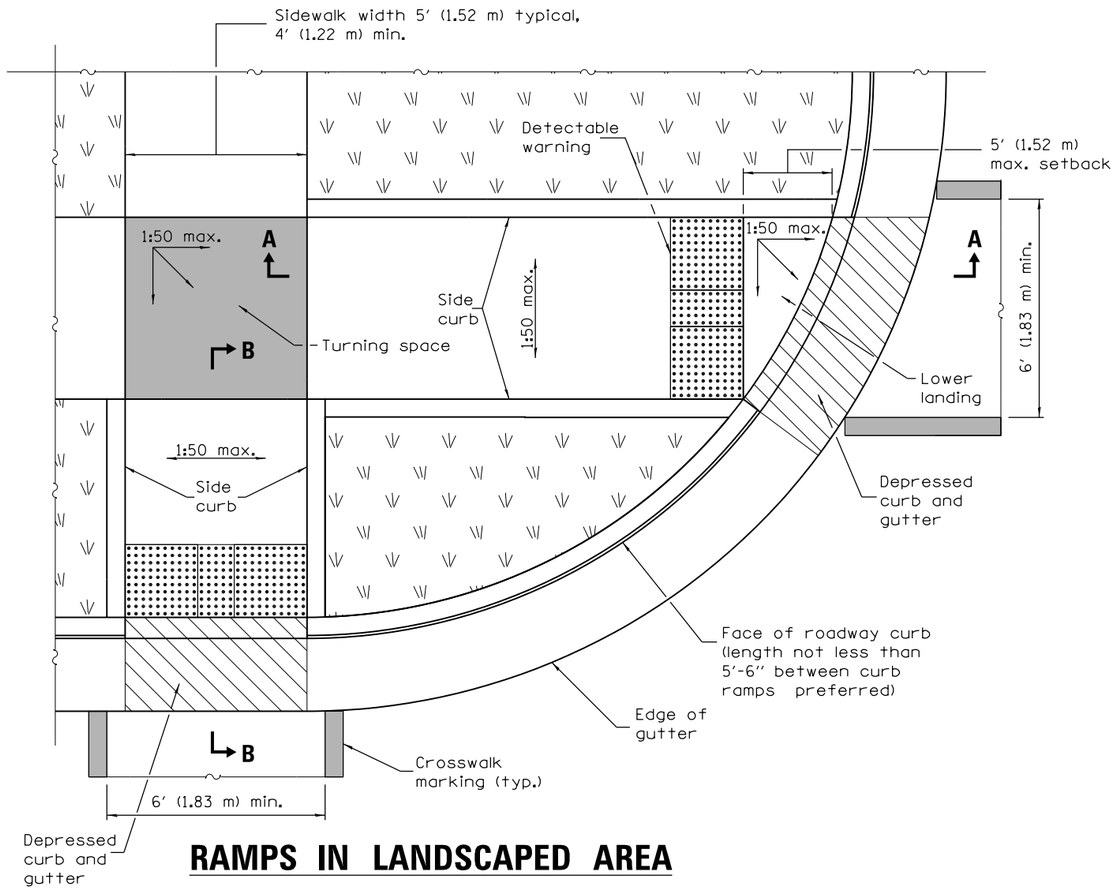

RAMPS IN LANDSCAPED AREA

SETBACK ≤ 5′

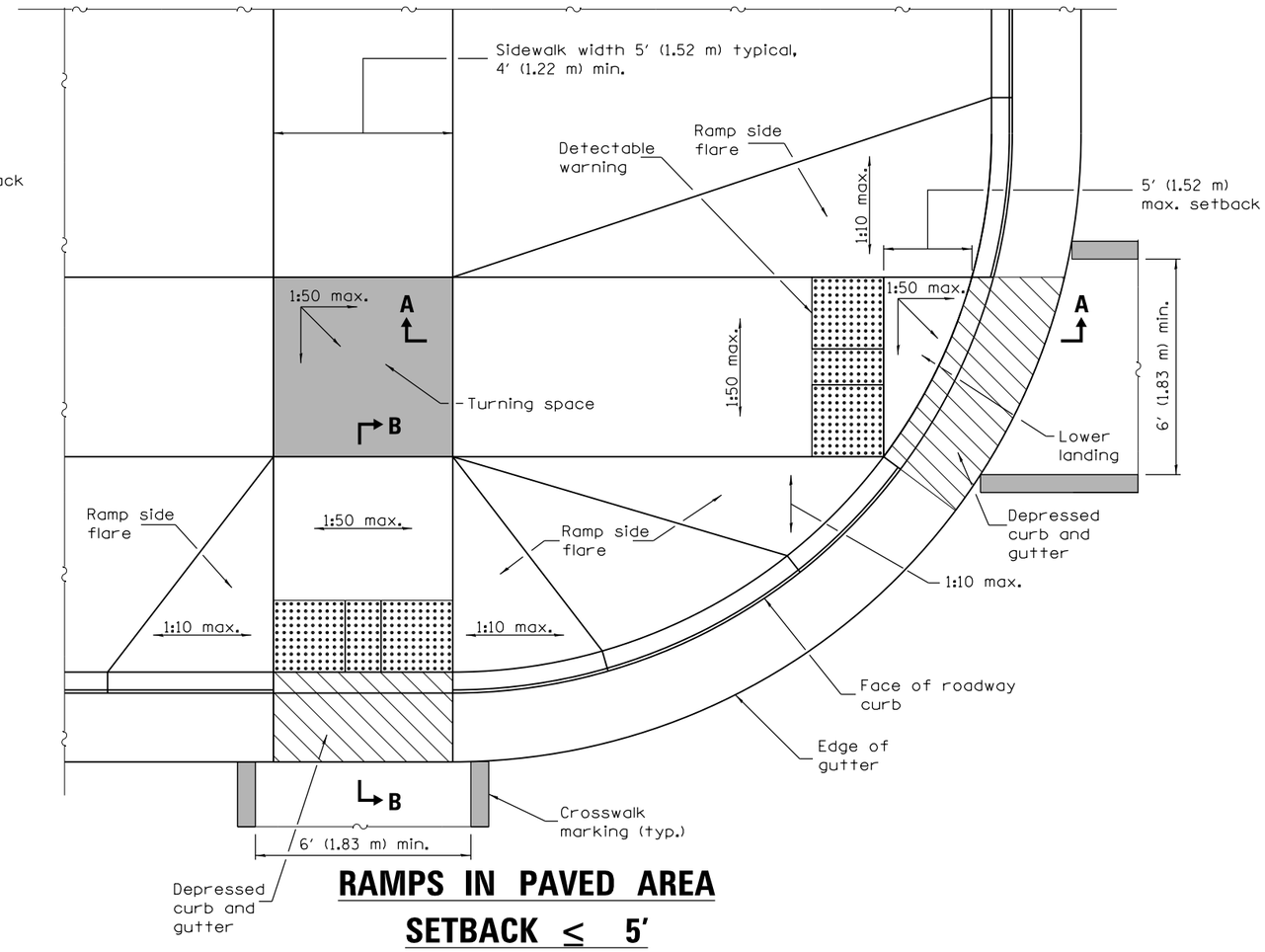

RAMPS IN PAVED AREA

SETBACK ≤ 5′

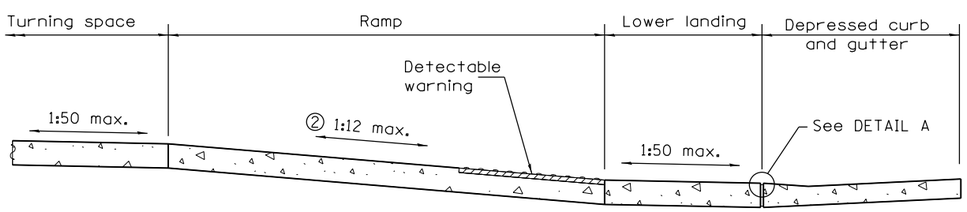

SECTION A–A

② The running slope of the curb ramp shall not require the ramp length to exceed 15′ (4.5 m).

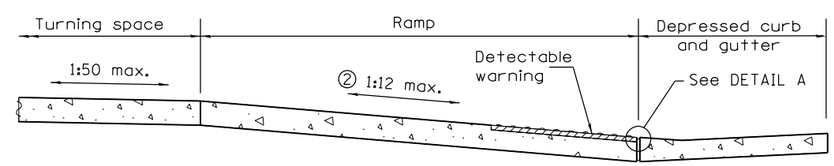

SECTION B–B

② The running slope of the curb ramp shall not require the ramp length to exceed 15′ (4.5 m).

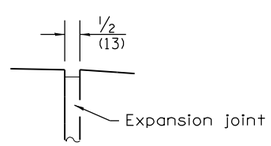

DETAIL A

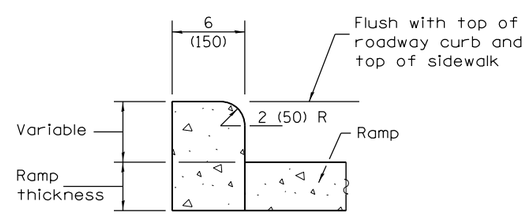

SIDE CURB DETAIL

See Sheet 2 for GENERAL NOTES.

DATE	REVISIONS
1-1-15	① not appl. to int. sidewalks.
	Rev. gen. notes. Ch'd Upper
	landing to Turning space.
1-1-13	Widened crosswalk markings
	to 6′ (1.83 m) min. inside
	dimension. Rev. Gen. Notes.

PERPENDICULAR CURB RAMPS FOR SIDEWALKS

(Sheet 1 of 2)

STANDARD 424001–08

Illinois Department of Transportation

PASSED January 1, 2015

Michael Brand

ENGINEER OF POLICY AND PROCEDURES

APPROVED January 1, 2015

ENGINEER OF DESIGN AND ENVIRONMENT

ISSUED 1-1-97

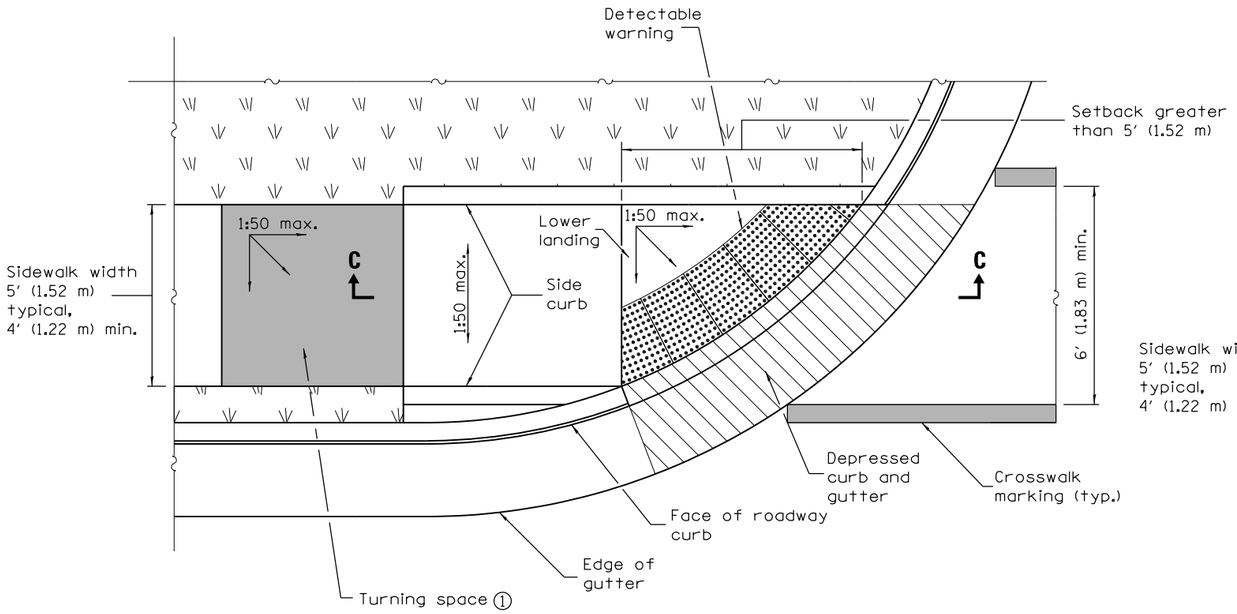

RAMP IN LANDSCAPED AREA
SETBACK > 5′

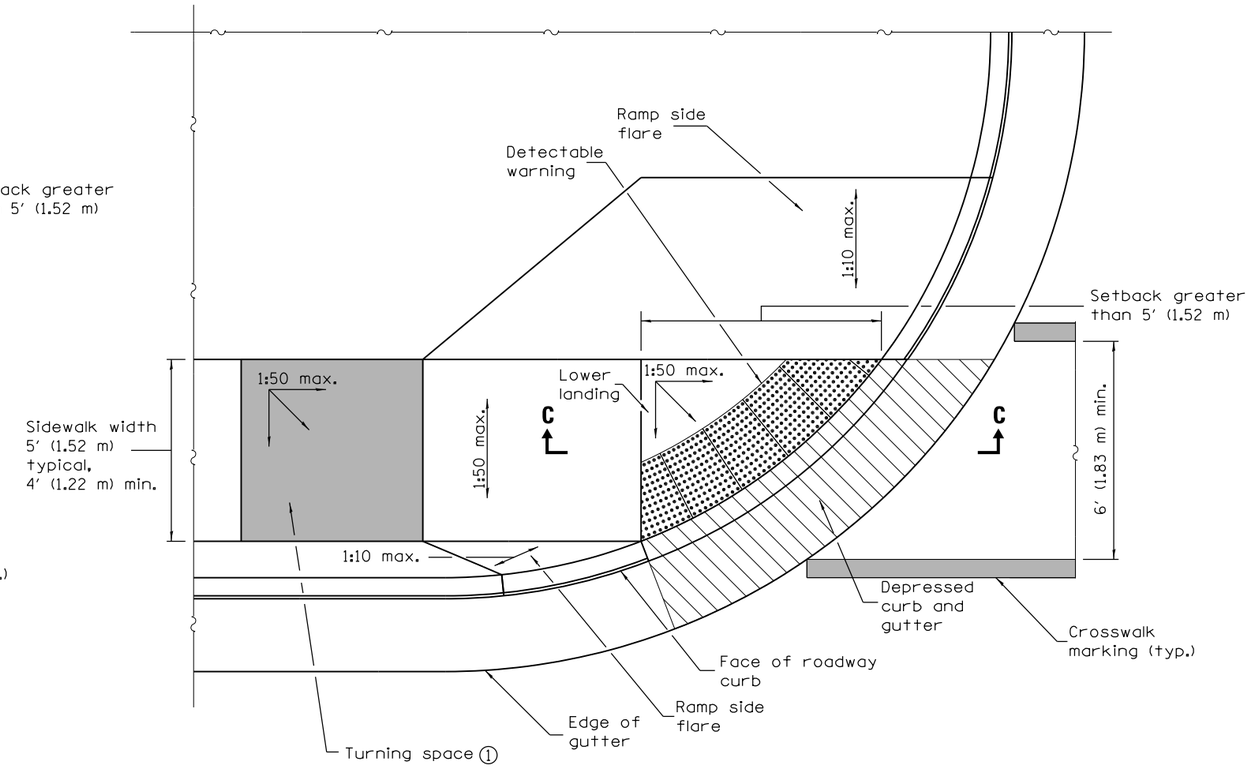

RAMP IN PAVED AREA
SETBACK > 5′

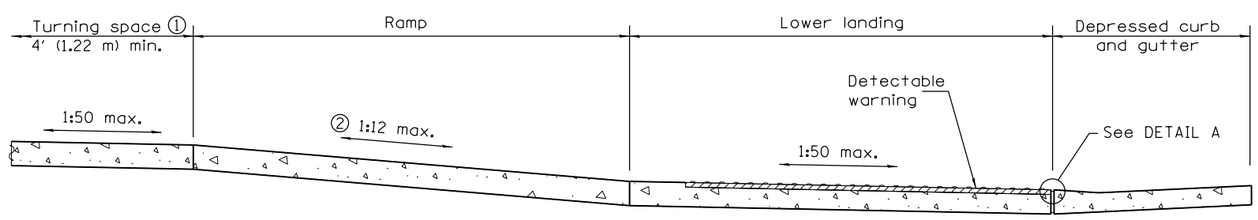

SECTION C–C

① Turning space not required for ramp slopes flatter than 1:20.

② The running slope of the curb ramp shall not require the ramp length to exceed 15′ (4.5 m).

GENERAL NOTES

All slope ratios are expressed as units of vertical displacement to units of horizontal displacement (V:H).

Where the turning space is constrained on a side opposite a ramp, the minimum length of the turning space in the direction of the ramp-run shall be 5′ (1.52 m).

Where 1:50 maximum slope is shown, 1:64 is preferred.

See Standard 606001 for details of depressed curb adjacent to curb ramp.

All dimensions are in inches (millimeters) unless otherwise shown.

Illinois Department of Transportation

PASSED January 1, 2015
Michael Brand
ENGINEER OF POLICY AND PROCEDURES
APPROVED January 1, 2015
ENGINEER OF DESIGN AND ENVIRONMENT

ISSUED 1-1-97

PERPENDICULAR CURB RAMPS FOR SIDEWALKS

(Sheet 2 of 2)

STANDARD 424001–08

CLASS C

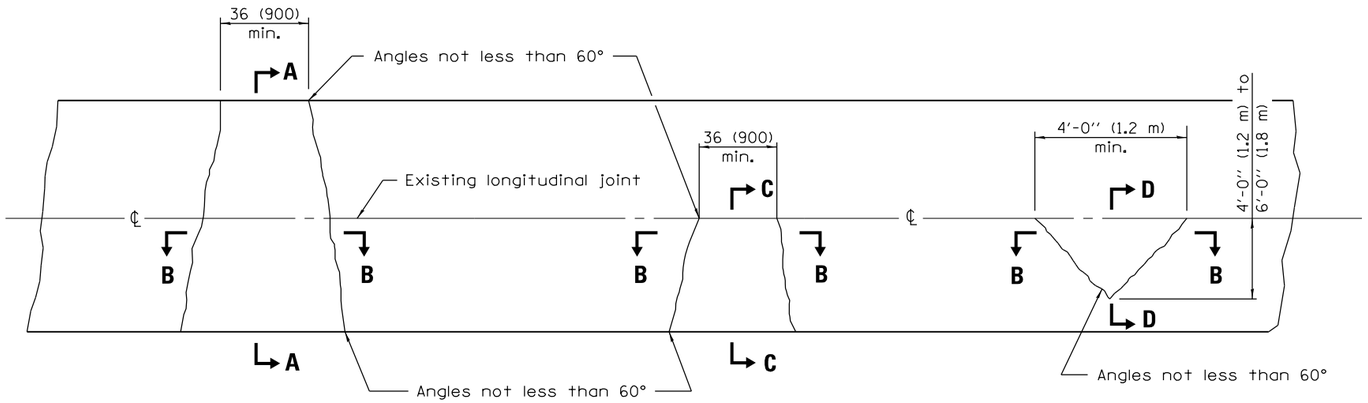

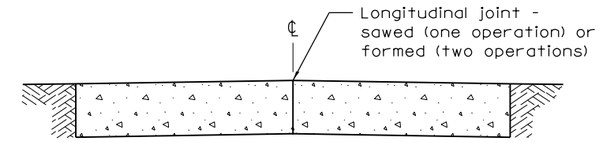

SECTION A–A

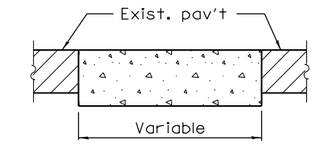

SECTION B–B

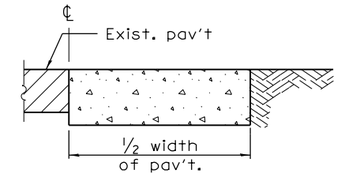

SECTION C–C

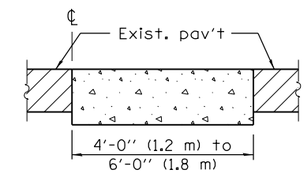

SECTION D–D

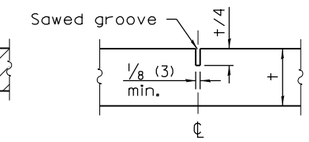

DETAIL OF SAWED CONTRACTION JOINT

Note:
Longitudinal joints shall be as detailed on Standard 420001, except tie bars are not required for patches 20'-0" (6.0 m) or less in length.

CLASS D

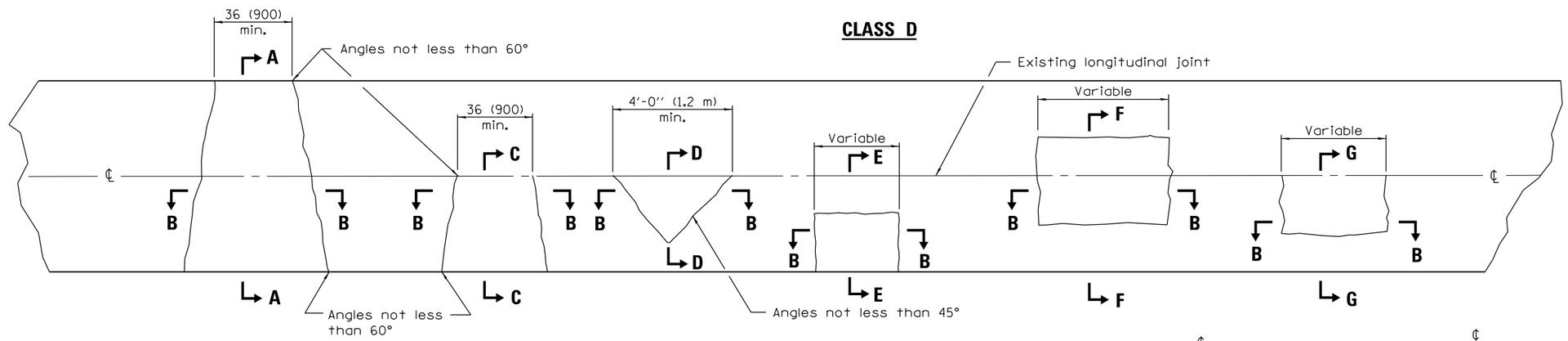

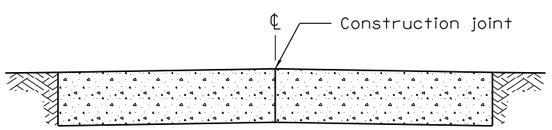

SECTION A–A
(Built in two operations)

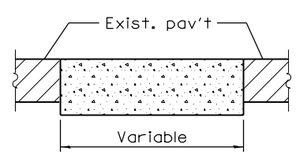

SECTION B–B

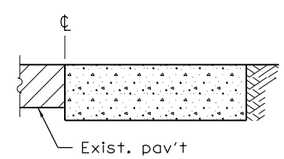

SECTION C–C

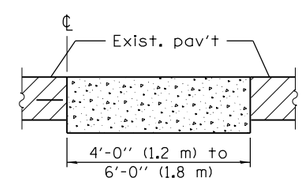

SECTION D–D

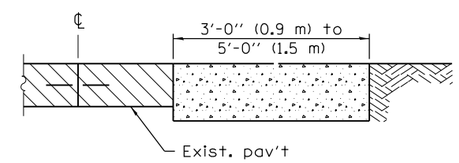

SECTION E–E

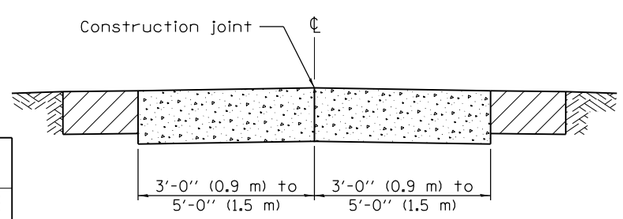

SECTION F–F
(Built in two operations)

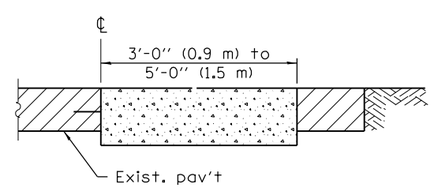

SECTION G–G

GENERAL NOTES

Existing tie bars shall be either cut or removed. Marginal bars shall be cut.

All dimensions are in inches (millimeters) unless otherwise shown.

Illinois Department of Transportation

PASSED January 1, 2008
ENGINEER OF POLICY AND PROCEDURES
APPROVED January 1, 2008
ENGINEER OF DESIGN AND ENVIRONMENT

ISSUED 1-1-97

DATE	REVISIONS
1-1-08	Switched units to
	English (metric).
1-1-07	Revised Note for
	Class C patches.

CLASS C and D PATCHES

STANDARD 442201–03

PIPE DIA.	THICK-NESS	DIMENSIONS					SLOPE (Approx.) (V:H)	BODY
		A	B	H	L	W		
		1± (25)	(max.)	1± (25)	1½± (38)	2± (50)		
12 (300)	0.064 (1.63)	6 (150)	6 (150)	6 (150)	21 (535)	24 (610)	1:2½	1 Pc.
15 (375)	0.064 (1.63)	7 (180)	8 (205)	6 (150)	26 (660)	30 (760)	1:2½	1 Pc.
18 (450)	0.064 (1.63)	8 (205)	10 (255)	6 (150)	31 (785)	36 (915)	1:2½	1 Pc.
21 (525)	0.064 (1.63)	9 (230)	12 (305)	6 (150)	36 (915)	42 (1.065 m)	1:2½	1 Pc.
24 (600)	0.064 (1.63)	10 (255)	13 (330)	6 (150)	41 (1.040 m)	48 (1.220 m)	1:2½	1 Pc.
30 (750)	0.079 (2.01)	12 (305)	16 (405)	8 (205)	51 (1.295 m)	60 (1.525 m)	1:2½	1 Pc.
36 (900)	0.079 (2.01)	14 (355)	19 (480)	9 (230)	60 (1.525 m)	72 (1.830 m)	1:2½	2 Pc.
42 (1050)	0.109 (2.77)	16 (405)	22 (560)	11 (280)	69 (1.750 m)	84 (2.135 m)	1:2½	2 Pc.
48 (1200)	0.109 (2.77)	18 (455)	27 (685)	12 (305)	78 (1.980 m)	90 (2.285 m)	1:2¼	2 Pc.
54 (1350)	0.109 (2.77)	18 (455)	30 (760)	12 (305)	84 (2.135 m)	102 (2.590 m)	1:2	2 Pc.
60 (1500)	0.109 (2.77)	18 (455)	33 (840)	12 (305)	87 (2.210 m)	114 (2.895 m)	1:1¾	3 Pc.
66 (1650)	0.109 (2.77)	18 (455)	36 (915)	12 (305)	87 (2.210 m)	120 (3.050 m)	1:1½	3 Pc.
72 (1800)	0.109 (2.77)	18 (455)	39 (990)	12 (305)	87 (2.210 m)	126 (3.200 m)	1:1⅓	3 Pc.
78 (1950)	0.109 (2.77)	18 (455)	42 (1.065 m)	12 (305)	87 (2.210 m)	132 (3.355 m)	1:1¼	3 Pc.
84 (2250)	0.109 (2.77)	18 (455)	45 (1.145 m)	12 (305)	87 (2.210 m)	138 (3.505 m)	1:1⅙	3 Pc.

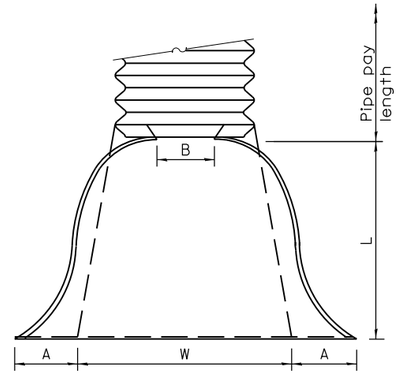

PLAN

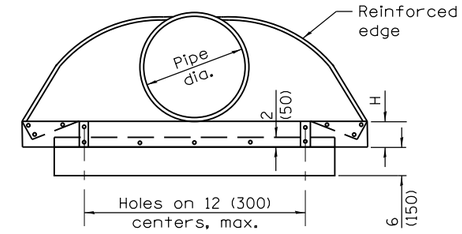

END VIEW

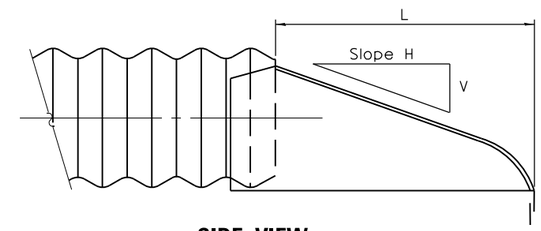

SIDE VIEW

END SECTION

NOTES

For 60 (1500) thru 84 (2250) sizes, reinforced edges shall be supplemented with stiffener angles. The angles shall be 2x2x¼(51x51x6.4) for 60 (1500) thru 72 (1800) diameter and 2½x2½x¼ (64x64x6.4) for 78 (1950) thru 84 (2250) diameter. The angles shall be attached by ⅜ (M10) rivets or bolts.

All slope ratios are expressed as units of vertical displacement to units of horizontal displacement (V:H).

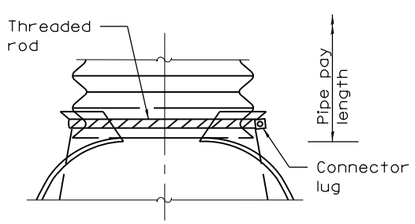

TYPE 1
For 12 (300) thru 24 (600) only (See Note 1)

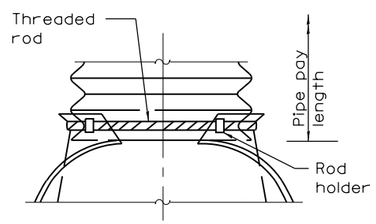

TYPE 2
For 30 (750) and 36 (900) only (See Note 1)

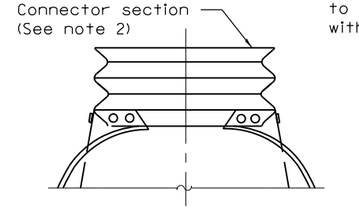

TYPE 3
(See Note 2)

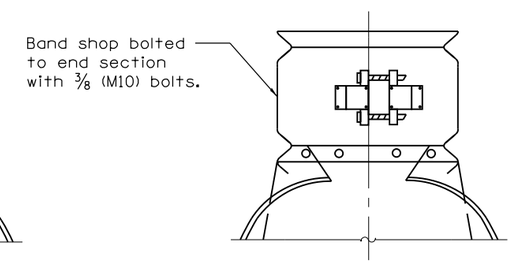

TYPE 4
(See Note 3)

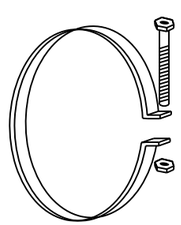

1 (25) wide, 0.109 (2.77) thick strap with standard ½x6 (M12x150) band bolt and nut.

ALTERNATE STRAP CONNECTOR
(For Type 1 only)

NOTES

1. Types 1 and 2 for pipes with annular ends only.
2. Type 3 connection may be used for all pipe sizes and includes 12 (300) of the pipe length. The connector section shall be attached to the end section by rivets or bolts and shall be the same metal thickness as the end section. Stub shall be either 2⅔ (68) pitch x ½ (13) depth or 3 (75) pitch x 1 (25) depth annular corrugated pipe.
3. Type 4 connection can be used for all pipe sizes. Coupler shall be 2⅔ x ½ (68x13) dimple, hugger, or annular band of 3x1 (75x25). The dimple, hugger, or annular band may be used with corrugated metal pipes having annular ends. For corrugated metal pipes having helical ends, only the dimple band will be allowed.

All dimensions are in inches (millimeters) unless otherwise shown.

CONNECTIONS OF END SECTIONS

Illinois Department of Transportation

PASSED January 1, 2009
ENGINEER OF POLICY AND PROCEDURES
APPROVED January 1, 2009
ENGINEER OF DESIGN AND ENVIRONMENT

ISSUED 1-1-97

DATE	REVISIONS
1-1-09	Switched units to
	English (metric).
1-1-97	Renum. Standard 2228-5.

METAL END SECTION FOR PIPE CULVERTS

STANDARD 542401-01

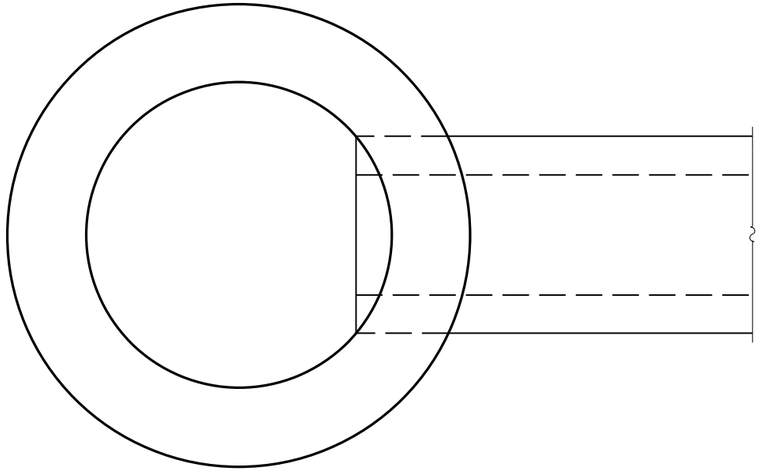

PLAN

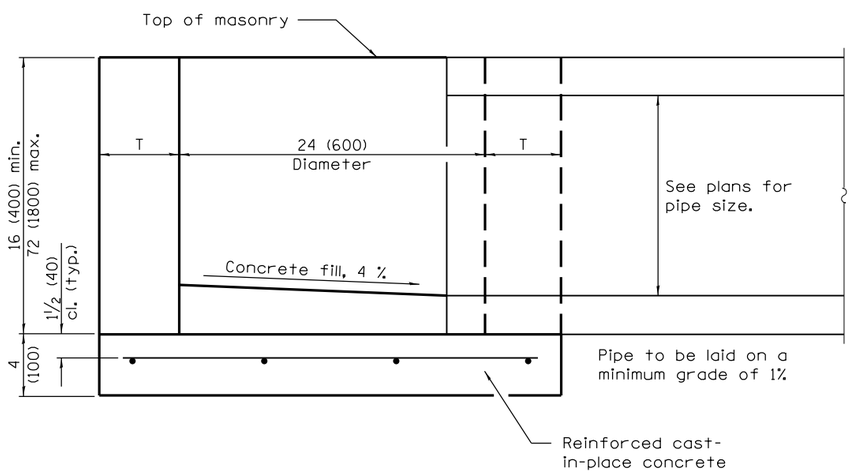

ELEVATION

ALTERNATE MATERIALS FOR WALLS	T
BRICK MASONRY	8 (200)
CAST-IN-PLACE CONCRETE	6 (150)
CONCRETE MASONRY UNIT	5 (125)
PRECAST REINFORCED CONCRETE SECTION	3 (75)

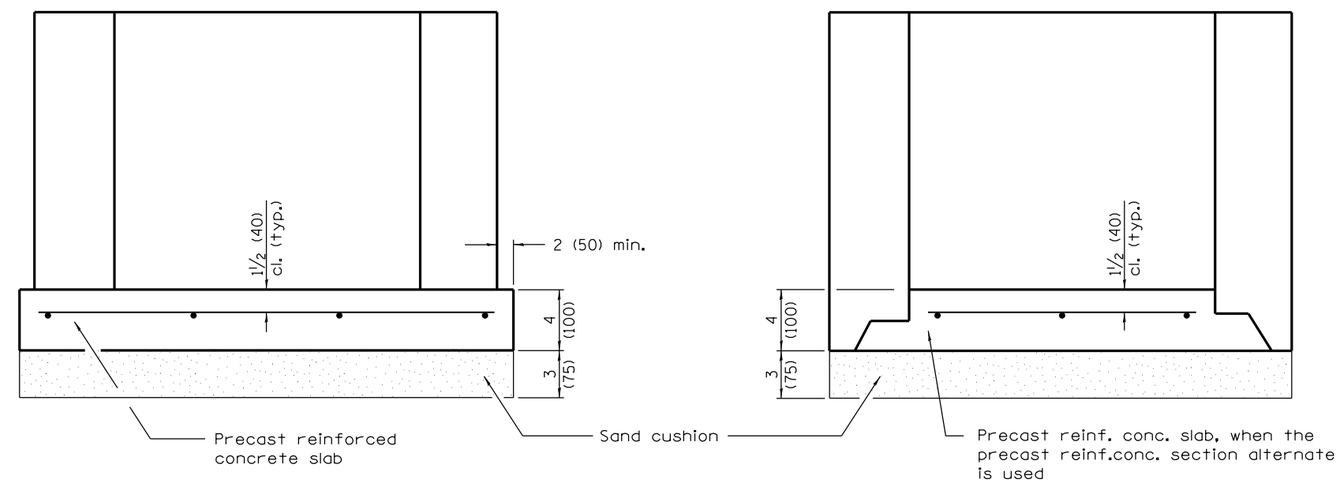

ALTERNATE METHODS

GENERAL NOTES

Bottom slabs shall be reinforced with a minimum of 0.24 sq. in./ft. (510 sq. mm/m) in both directions with a maximum spacing of 10 (250).

Bottom slabs may be connected to the riser as determined by the fabricator; however, only a single row of reinforcement around the perimeter may be utilized.

All dimensions are in inches (millimeters) unless otherwise shown.

Illinois Department of Transportation

PASSED January 1, 2014

Michael Brand
ENGINEER OF POLICY AND PROCEDURES

APPROVED January 1, 2014

ENGINEER OF DESIGN AND ENVIRONMENT

ISSUED 1-1-97

DATE	REVISIONS
1-1-14	Increased height to
	72 (1800) maximum.
1-1-11	Detailed rein. in slabs.
	Added max. limit to height.
	Added general notes.

INLET – TYPE A

STANDARD 602301–04

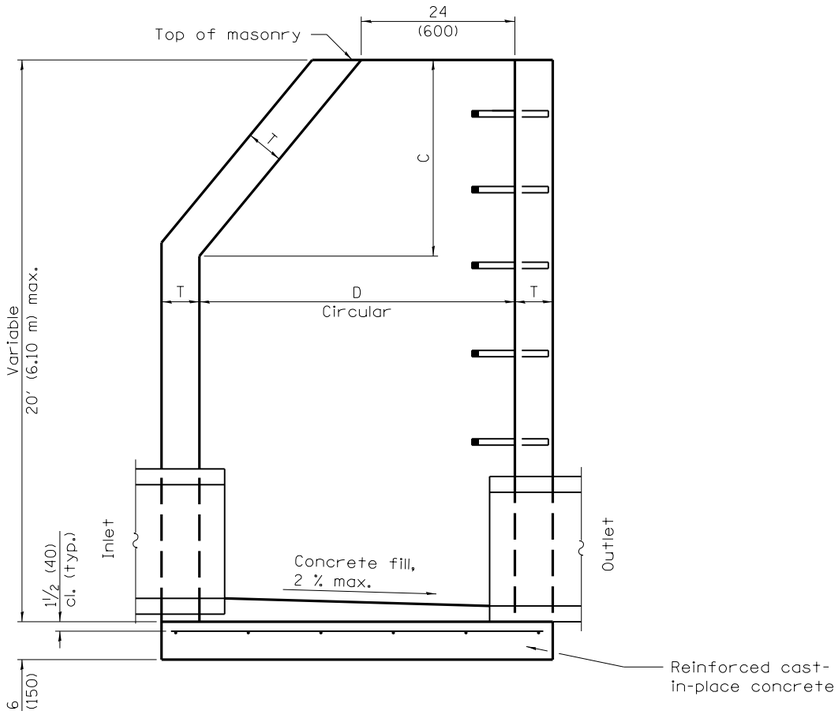

ELEVATION – ECCENTRIC

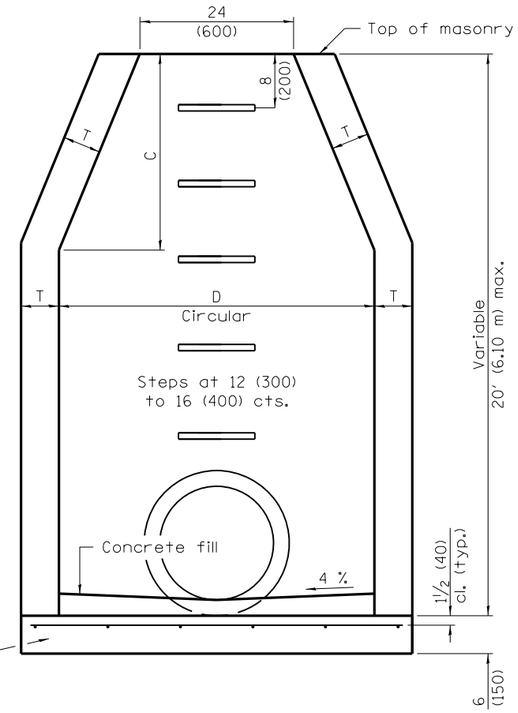

ELEVATION – CONCENTRIC

ALTERNATE MATERIALS FOR WALLS	D	C*	T (min.)
Concrete Masonry Unit	4'-0" (1.2 m) 5'-0" (1.5 m)	30 (750) 3'-9" (1.15 m)	5 (125) 5 (125)
Brick Masonry	4'-0" (1.2 m) 5'-0" (1.5 m)	30 (750) 3'-9" (1.15 m)	8 (200) 8 (200)
Precast Reinforced Concrete Section	4'-0" (1.2 m) 5'-0" (1.5 m)	30 (750) 3'-9" (1.15 m)	4 (100) 5 (125)
Cast-in-place Concrete	4'-0" (1.2 m) 5'-0" (1.5 m)	30 (750) 3'-9" (1.15 m)	6 (150) 6 (150)

* For precast reinforced concrete sections, dimension "C" may vary from the dimension given to plus 6 (150).

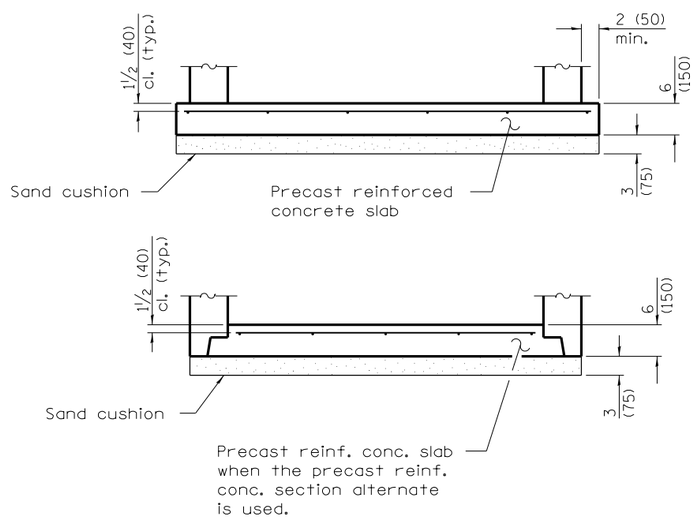

ALTERNATE BOTTOM SLAB

GENERAL NOTES

Bottom slabs shall be reinforced with a minimum of 0.31 sq. in./ft. (660 sq. mm/m) in both directions with a maximum spacing of 12 (300).

Bottom slabs may be connected to the riser as determined by the fabricator; however, only a single row of reinforcement around the perimeter may be utilized.

See Standard 602701 for details of steps.

See Standard 602601 for optional Precast Reinforced Concrete Flat Slab Top.

All dimensions are in inches (millimeters) unless otherwise shown.

Illinois Department of Transportation

PASSED January 1, 2011
Michael Brand
ENGINEER OF POLICY AND PROCEDURES
APPROVED January 1, 2011
ENGINEER OF DESIGN AND ENVIRONMENT

ISSUED 1-1-97

DATE	REVISIONS
1-1-11	Detailed rein. in slabs.
	Added max. limit to height.
	Revised general notes.
1-1-09	Switched units to
	English (metric).

MANHOLE TYPE A

STANDARD 602401–03

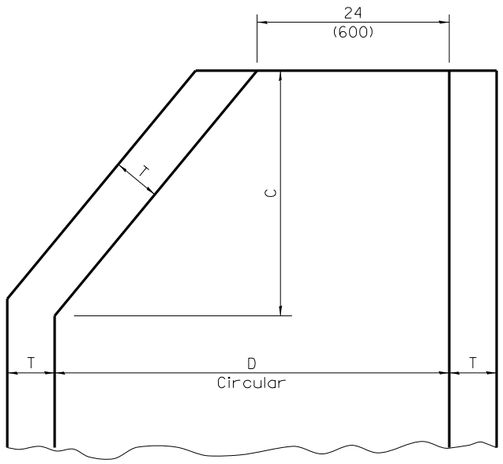

The cone of the valve vault shall be constructed as shown above only when there is interference with underground conditions and those conditions cannot be altered.

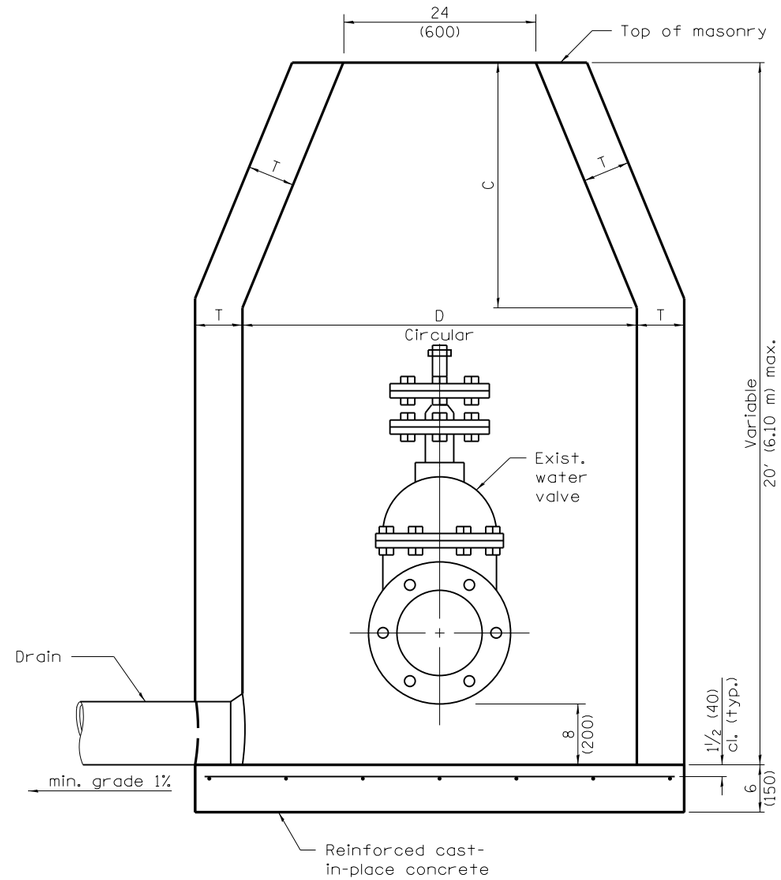

ELEVATION

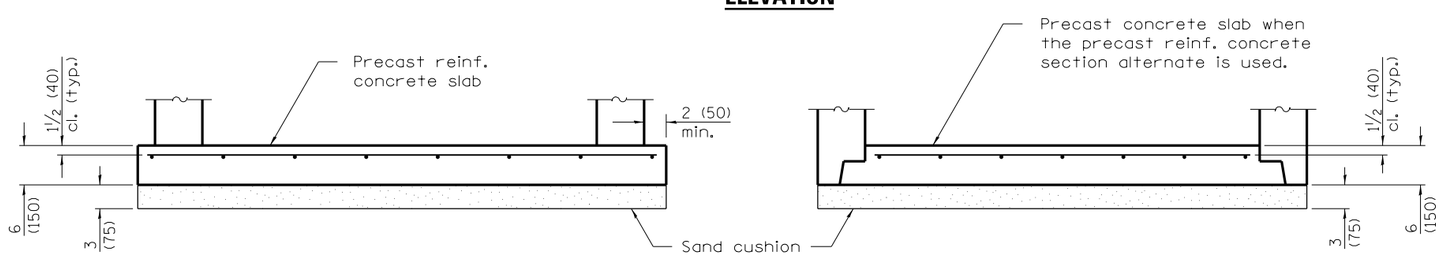

ALTERNATE METHODS

ALTERNATE MATERIALS FOR WALLS	D	C *	T (min.)
Concrete Masonry Unit	4'-0" (1.2 m) 5'-0" (1.5 m)	30 (750) 3'-9" (1.15 m)	5 (125) 5 (125)
Brick Masonry	4'-0" (1.2 m) 5'-0" (1.5 m)	30 (750) 3'-9" (1.15 m)	8 (200) 8 (200)
Precast Reinforced Concrete Section	4'-0" (1.2 m) 5'-0" (1.5 m)	30 (750) 3'-9" (1.15 m)	4 (100) 5 (125)
Cast-in-Place Concrete	4'-0" (1.2 m) 5'-0" (1.5 m)	30 (750) 3'-9" (1.15 m)	6 (150) 6 (150)

* For precast reinforced concrete sections, dimension "C" may vary from the dimension given to plus 6 (150).

DIAMETER OF WATER MAIN	D
8 (200) and under	4'-0" (1.2 m)
10 (250) and over	5'-0" (1.5 m)

GENERAL NOTES

Bottom slabs shall be reinforced with a minimum of 0.31 sq. in./ft. (660 sq. mm/m) in both directions with a maximum spacing of 12 (300).

Bottom slabs may be connected to the riser as determined by the fabricator; however, only a single row of reinforcement around the perimeter may be utilized.

See Standard 602601 for optional Precast Reinforced Concrete Flat Top Slab.

All dimensions are in inches (millimeters) unless otherwise shown.

Illinois Department of Transportation

PASSED January 1, 2011
Michael Brand
ENGINEER OF POLICY AND PROCEDURES

APPROVED January 1, 2011
Scott E. Stokes
ENGINEER OF DESIGN AND ENVIRONMENT

ISSUED 1-1-97

DATE	REVISIONS
1-1-11	Detailed reinforcement in slabs. Revised general notes.
1-1-09	Switched units to English (metric).

VALVE VAULT TYPE A

STANDARD 602501–02

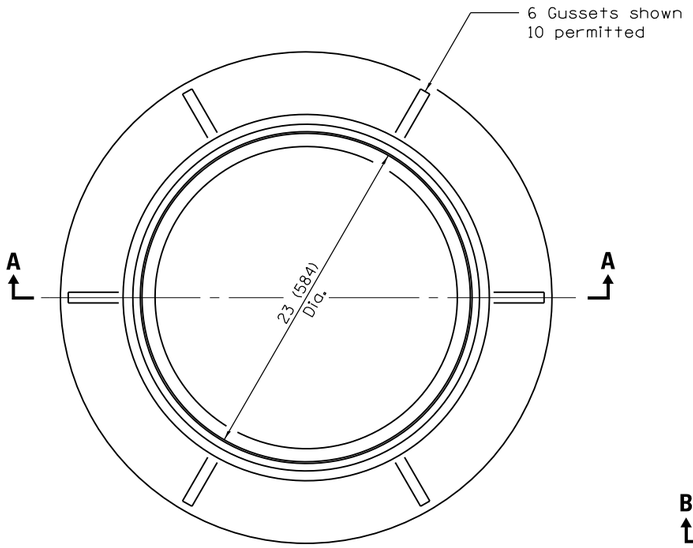

CAST FRAME

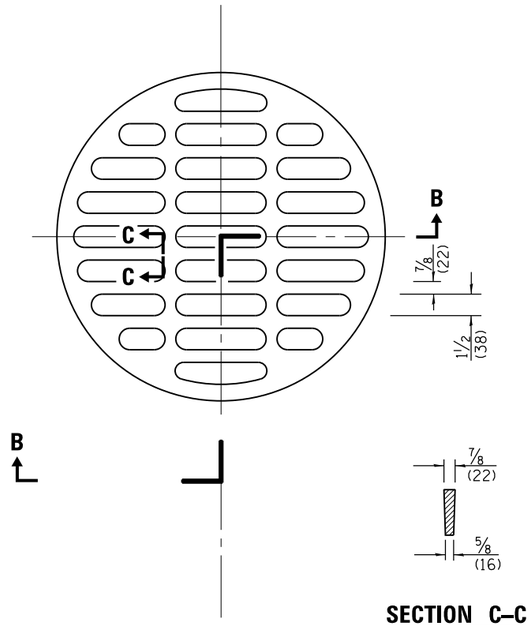

SECTION C–C

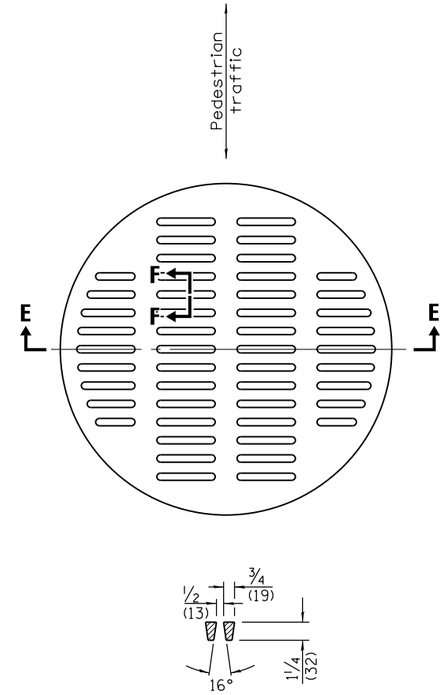

SECTION F–F

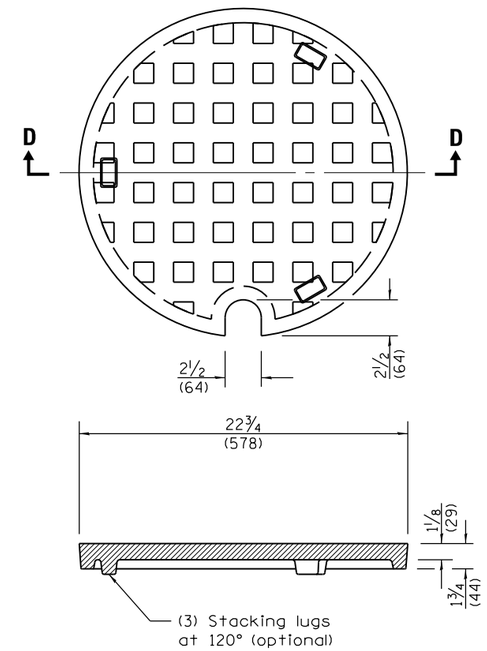

SECTION D–D

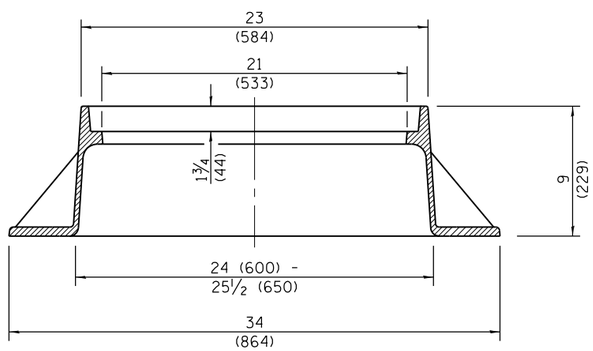

SECTION A–A
Gray Iron

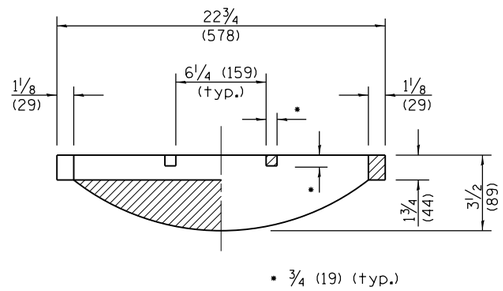

SECTION B–B

CAST OPEN LID

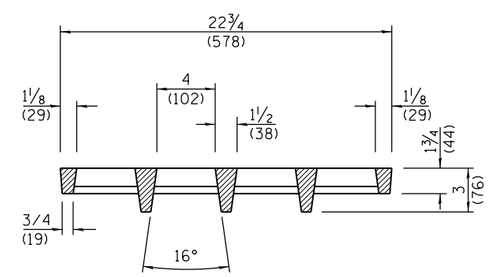

SECTION E–E

ADA COMPLIANT
CAST OPEN LID

CAST CLOSED LID
Gray Iron Lid

All dimensions are in inches (millimeters) unless otherwise shown.

Illinois Department of Transportation

PASSED January 1, 2015
Michael Brand
ENGINEER OF POLICY AND PROCEDURES
APPROVED January 1, 2015
ENGINEER OF DESIGN AND ENVIRONMENT

ISSUED 1-1-97

DATE	REVISIONS
1-1-15	Revised dimensioning of
	frame. Added ADA compliant
	open lid.
1-1-09	Switched units to
	English (metric).

FRAME AND LIDS TYPE 1

STANDARD 604001–04

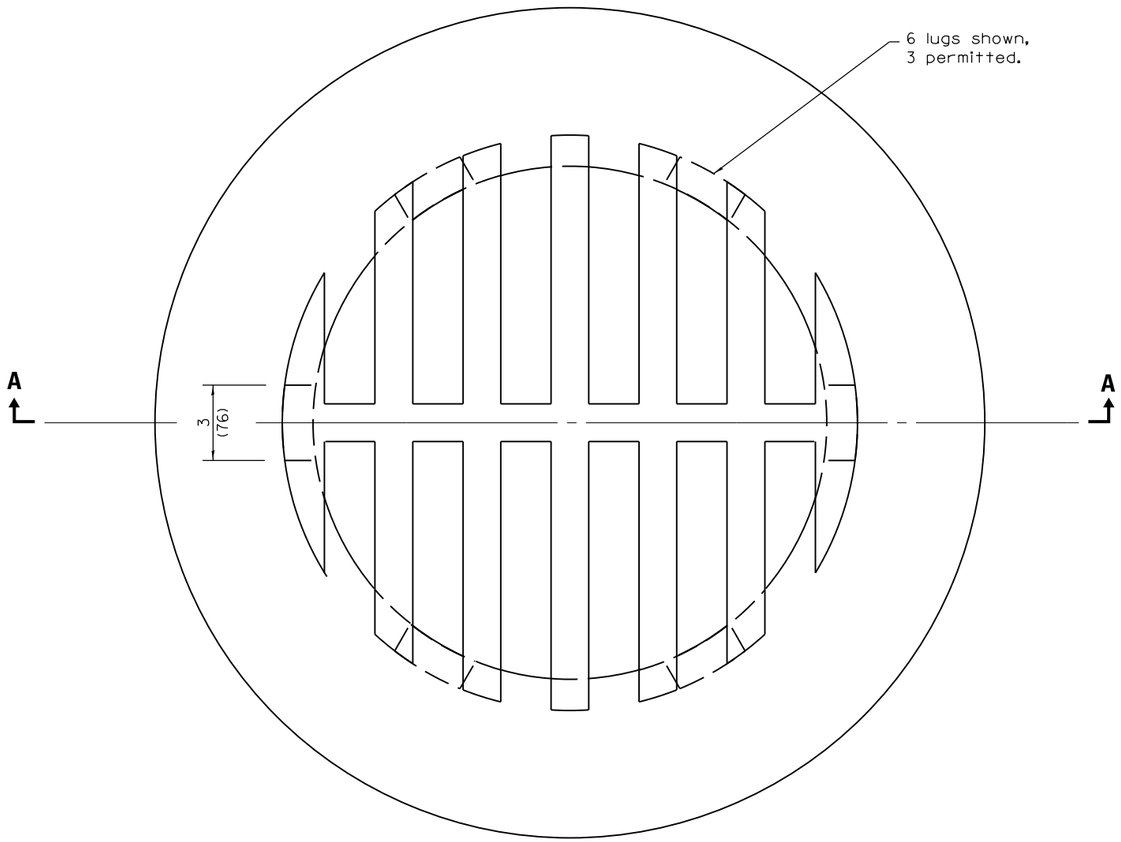

CAST GRATE

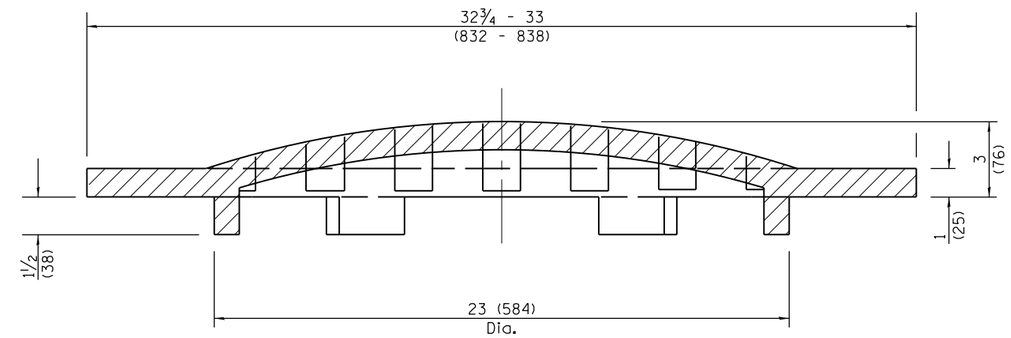

SECTION A–A

All dimensions are in inches (millimeters) unless otherwise shown.

Illinois Department of Transportation

PASSED January 1. 2015

Michael Brand
ENGINEER OF POLICY AND PROCEDURES

APPROVED January 1. 2015

ENGINEER OF DESIGN AND ENVIRONMENT

ISSUED 1-1-97

DATE	REVISIONS
1-1-15	Revised dimensions.
1-1-09	Switched units to
	English (metric).

GRATE TYPE 8

STANDARD 604036–03

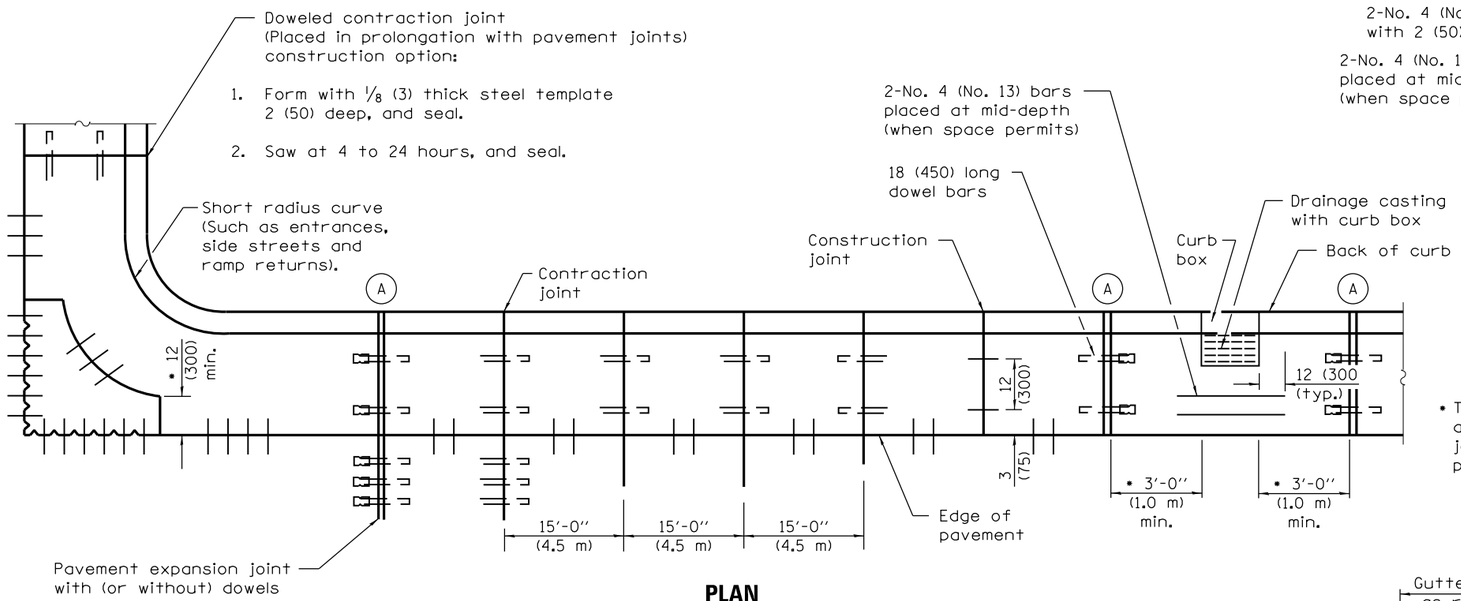

PLAN
ADJACENT TO PCC PAVEMENT OR PCC BASE COURSE

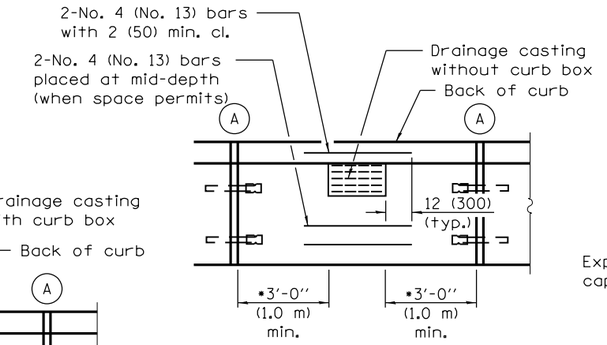

• This dimension shall be adjusted to align with joint on the adjacent pavement

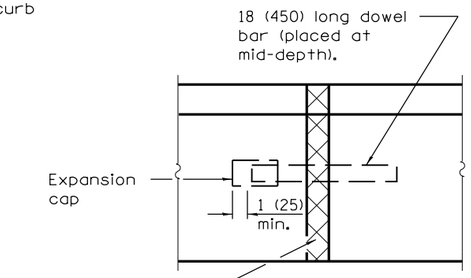

DETAIL (A)
EXPANSION JOINT

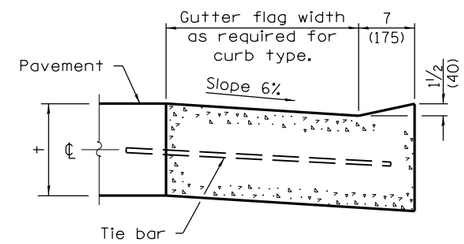

DEPRESSED CURB (TYPICAL)

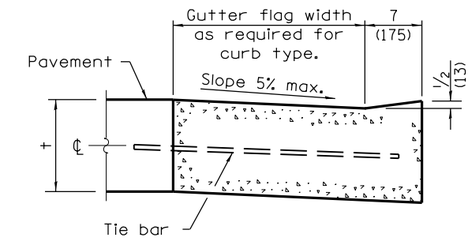

DEPRESSED CURB ADJACENT TO CURB RAMP ACCESSIBLE TO THE DISABLED

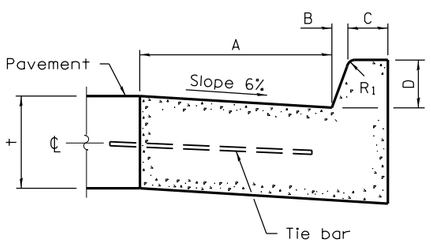

BARRIER CURB

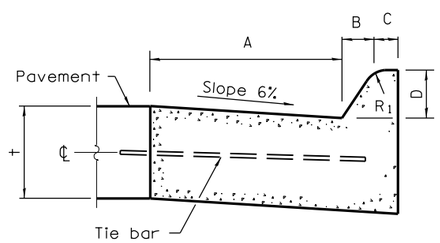

MOUNTABLE CURB

TABLE OF DIMENSIONS BARRIER CURB					
TYPE	A	B	C	D	R_1
B-6.06 * (B-15.15)	6 (150)	1 (25)	6 (150)	6 (150)	1 (25)
B-6.12 (B-15.3)	12 (300)	1 (25)	6 (150)	6 (150)	1 (25)
B-6.18 (B-15.45)	18 (450)	1 (25)	6 (150)	6 (150)	1 (25)
B-6.24 (B-15.60)	24 (600)	1 (25)	6 (150)	6 (150)	1 (25)
B-9.12 (B-22.30)	12 (300)	2 (50)	5 (125)	9 (225)	1 (25)
B-9.18 (B-22.45)	18 (450)	2 (50)	5 (125)	9 (225)	1 (25)
B-9.24 (B-22.60)	24 (600)	2 (50)	5 (125)	9 (225)	1 (25)

* For corner islands only.

TABLE OF DIMENSIONS MOUNTABLE CURB						
TYPE	A	B	C	D	R_1	R_2
M-2.06 (M-5.15)	6 (150)	2 (50)	4 (100)	2 (50)	3 (75)	2 (50)
M-2.12 (M-5.30)	12 (300)	2 (50)	4 (100)	2 (50)	3 (75)	2 (50)
M-4.06 (M-10.15)	6 (150)	4 (100)	3 (75)	4 (100)	3 (75)	NA
M-4.12 (M-10.30)	12 (300)	4 (100)	3 (75)	4 (100)	3 (75)	NA
M-4.18 (M-10.45)	18 (450)	4 (100)	3 (75)	4 (100)	3 (75)	NA
M-4.24 (M-10.60)	24 (600)	4 (100)	3 (75)	4 (100)	3 (75)	NA
M-6.06 (M-15.15)	6 (150)	6 (150)	2 (50)	6 (150)	2 (50)	NA
M-6.12 (M-15.30)	12 (300)	6 (150)	2 (50)	6 (150)	2 (50)	NA
M-6.18 (M-15.45)	18 (450)	6 (150)	2 (50)	6 (150)	2 (50)	NA
M-6.24 (M-15.60)	24 (600)	6 (150)	2 (50)	6 (150)	2 (50)	NA

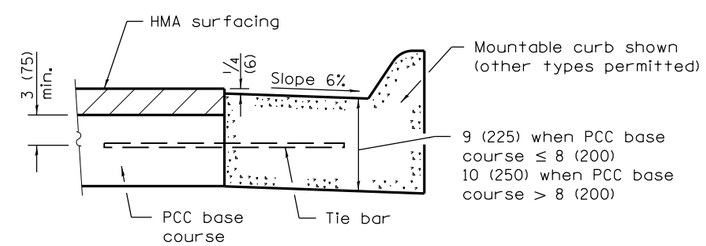

ADJACENT TO PCC BASE COURSE WITH HMA SURFACING

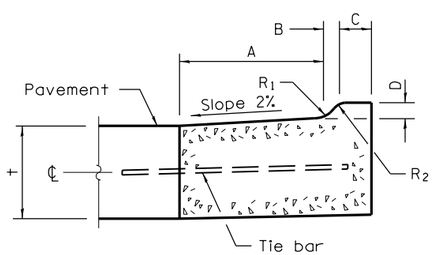

M–2.06 (M–5.15) and M–2.12 (M–5.30)

GENERAL NOTES

The bottom slope of combination curb and gutter constructed adjacent to pcc pavement shall be the same slope as the subbase or 6% when subbase is omitted.

t = Thickness of pavement.

Longitudinal joint tie bars shall be No. 6 (No. 19) at 24 (600) centers in accordance with details for longitudinal construction joint shown on Standard 420001.

A minimum clearance of 2 (50) between the end of the tie bar and the back of the curb shall be maintained.

The dowel bars shown in contraction joints will only be required for monolithic construction.

See Standard 606301 for details of corner islands.

All dimensions are in inches (millimeters) unless otherwise shown.

Illinois Department of Transportation

PASSED January 1, 2015
Michael Brand
ENGINEER OF POLICY AND PROCEDURES
APPROVED January 1, 2015
ENGINEER OF DESIGN AND ENVIRONMENT

ISSUED 1-1-97

DATE	REVISIONS
1-1-15	Added B-6.06 (B-15.15) barrier
	curb and gutter to table
	(corner islands only).
1-1-13	Added general note
	regarding requirement
	for dowel bars.

CONCRETE CURB TYPE B AND COMBINATION CONCRETE CURB AND GUTTER

(Sheet 1 of 2)

STANDARD 606001–06

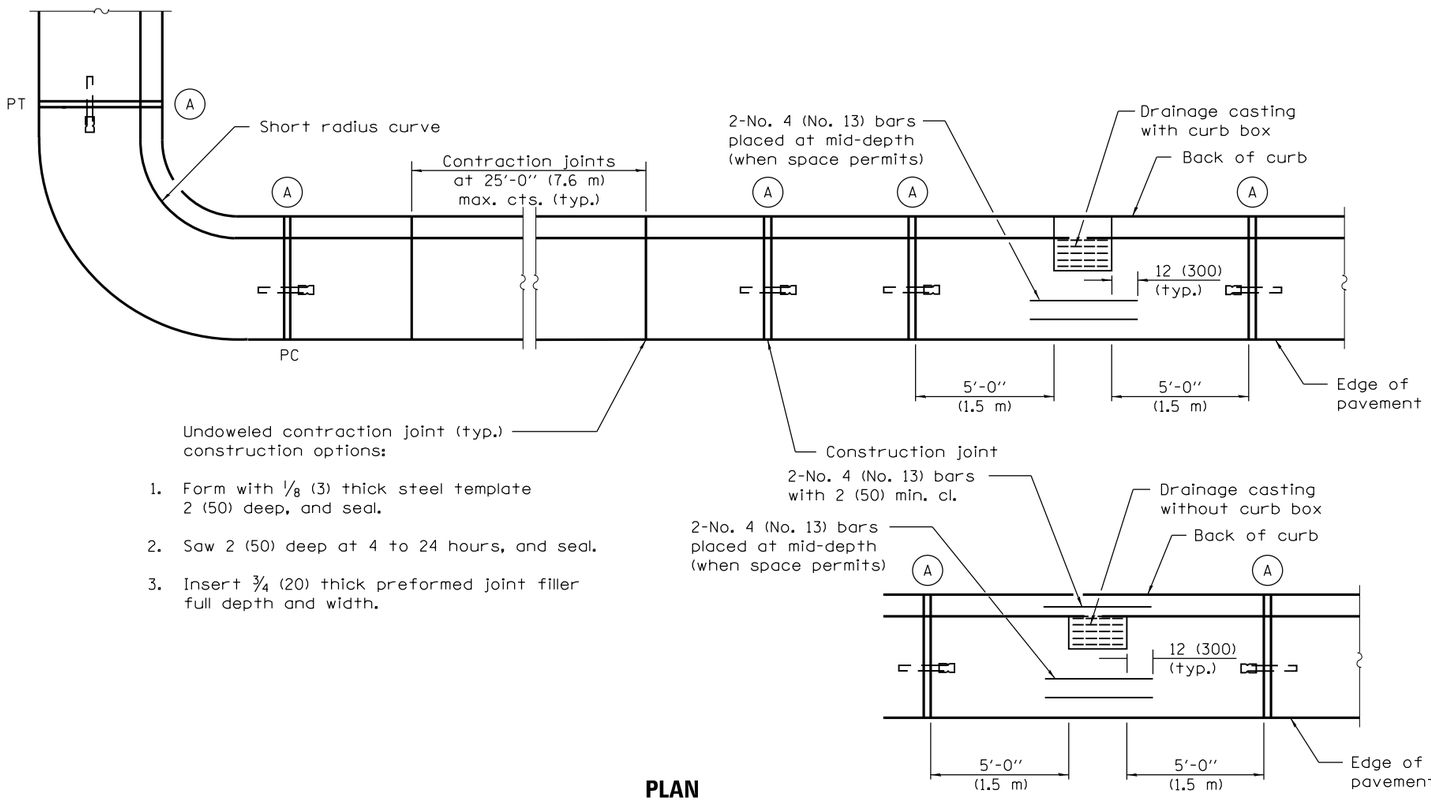

PLAN

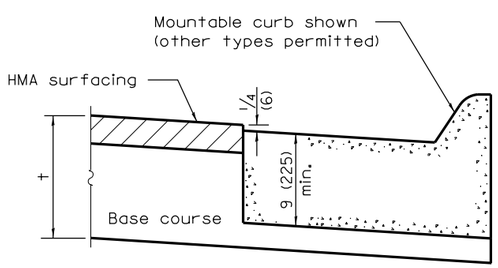

ON DISTURBED SUBGRADE

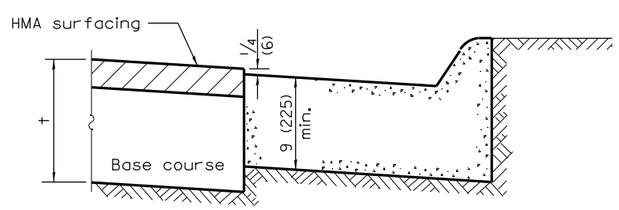

ON UNDISTURBED SUBGRADE

ADJACENT TO FLEXIBLE PAVEMENT

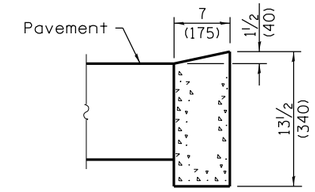

DEPRESSED CURB

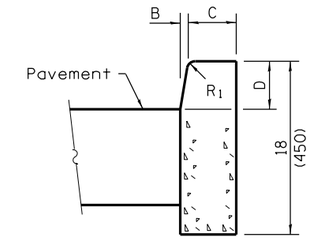

BARRIER CURB

ADJACENT TO FLEXIBLE PAVEMENT

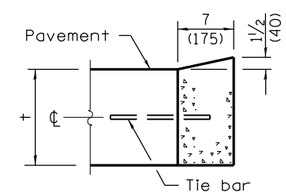

DEPRESSED CURB

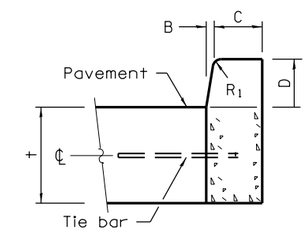

BARRIER CURB

ADJACENT TO PCC PAVEMENT OR PCC BASE COURSE

CONCRETE CURB TYPE B

Illinois Department of Transportation

PASSED January 1, 2015

Michael Brand
ENGINEER OF POLICY AND PROCEDURES

APPROVED January 1, 2015

ENGINEER OF DESIGN AND ENVIRONMENT

ISSUED 1-1-97

CONCRETE CURB TYPE B AND COMBINATION CONCRETE CURB AND GUTTER

(Sheet 2 of 2)

STANDARD 606001–06

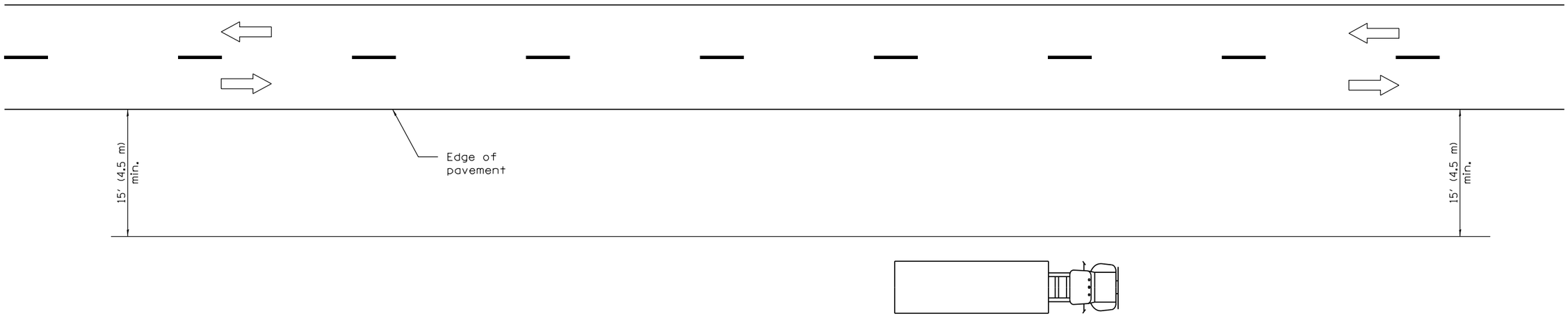

TYPICAL APPLICATIONS

Landscaping work

Utility work

Fencing contracts and maintenance

Cleaning culverts

GENERAL NOTES

This Standard is used where at all times all vehicles, equipment, workers or their activities are more than 15′ (4.5 m) from the edge of pavement.

When the work operation requires that two or more work vehicles cross the 15′ (4.5 m) clear zone in any one hour, traffic control shall be according to Standard 701006.

All dimensions are in inches (millimeters) unless otherwise shown.

Illinois Department of Transportation

APPROVED January 1, 2009
ENGINEER OF OPERATIONS

APPROVED January 1, 2009
ENGINEER OF DESIGN AND ENVIRONMENT

ISSUED 1-1-97

DATE	REVISIONS
1-1-09	Switched units to English (metric).
1-1-05	Revised title and notes.

OFF–RD OPERATIONS, 2L, 2W, MORE THAN 15′ (4.5 m) AWAY

STANDARD 701001–02

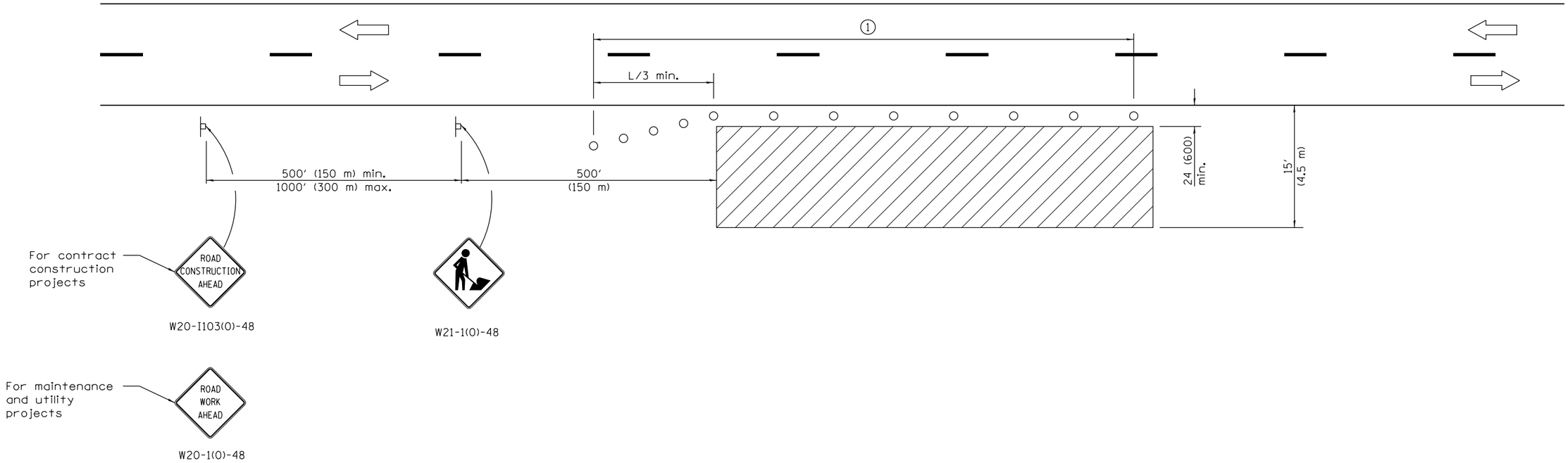

TYPICAL APPLICATIONS

Utility operations
Culvert extensions
Side slope changes
Guardrail installation and maintenance
Delineator installation
Landscaping operations
Shoulder repair
Sign installation and maintenance

SYMBOLS

Work area

Sign

Cone, drum or barricade

(1) When the work operation exceeds one hour, cones, drums or barricades shall be placed at 25′ (8 m) centers for L/3 distance, and at 50′ (15 m) centers through the remainder of the work area.

GENERAL NOTES

This Standard is used where any vehicles, equipment, workers or their activities will encroach in the area 15′ (4.5 m) to 24 (600) from the edge of pavement.

Calculate L as follows:

SPEED LIMIT	FORMULAS English	FORMULAS (Metric)
40 mph (70 km/h) or less:	$L = \frac{WS^2}{60}$	$L = \frac{WS^2}{150}$
45 mph (80 km/h) or greater:	L=(W)(S)	L=0.65(W)(S)

W = Width of offset in feet (meters).

S = Normal posted speed mph (km/h).

All dimensions are in inches (millimeters) unless otherwise shown.

Illinois Department of Transportation

APPROVED January 1, 2014
ENGINEER OF SAFETY ENGINEERING

APPROVED January 1, 2014
ENGINEER OF DESIGN AND ENVIRONMENT

ISSUED 1-1-97

DATE	REVISIONS
1-1-14	Revised workers sign
	number to agree with
	current MUTCD.
1-1-13	Omitted text 'WORKERS'
	sign.

OFF–RD OPERATIONS, 2L, 2W, 15′ (4.5 m) TO 24″ (600 mm) FROM PAVEMENT EDGE

STANDARD 701006–05

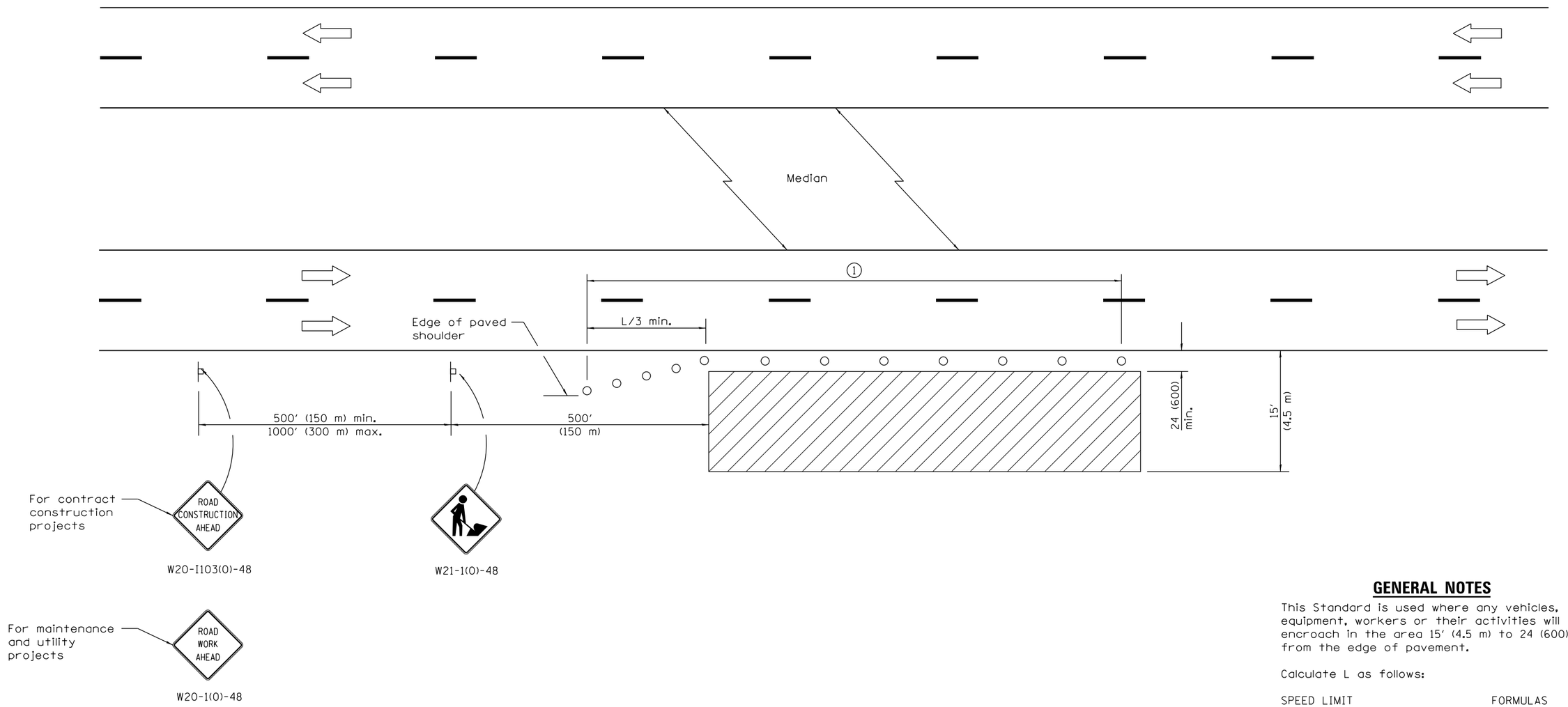

TYPICAL APPLICATIONS

Utility operations
Culvert extensions
Side slope changes
Guardrail installation and maintenance
Delineator installation
Landscaping operations
Shoulder repair
Sign installation and maintenance

① When the work operation exceeds one hour, cones, drums or barricades shall be placed at 25′ (8 m) centers for L/3 distance, and at 50′ (15 m) centers through the remainder of the work area.

SYMBOLS

Work area

Sign

Cone, drum or barricade

GENERAL NOTES

This Standard is used where any vehicles, equipment, workers or their activities will encroach in the area 15′ (4.5 m) to 24 (600) from the edge of pavement.

Calculate L as follows:

SPEED LIMIT	FORMULAS English	FORMULAS (Metric)
40 mph (70 km/h) or less:	$L = \frac{WS^2}{60}$	$L = \frac{WS^2}{150}$
45 mph (80 km/h) or greater:	L=(W)(S)	L=0.65(W)(S)

W = Width of offset in feet (meters).

S = Normal posted speed mph (km/h).

All dimensions are in inches (millimeters) unless otherwise shown.

Illinois Department of Transportation

APPROVED January 1, 2014
ENGINEER OF SAFETY ENGINEERING

APPROVED January 1, 2014
ENGINEER OF DESIGN AND ENVIRONMENT

ISSUED 1-1-97

DATE	REVISIONS
1-1-14	Revised workers sign
	number to agree with
	current MUTCD.
1-1-13	Omitted text 'WORKERS'
	sign.

OFF–RD OPERATIONS, MULTILANE, 15′ (4.5 m) TO 24 ″ (600 mm) FROM PAVEMENT EDGE

STANDARD 701101–04

① Cones at 25′ (8 m) centers for 250′ (75 m). Additional cones may be placed at 50′ (15 m) centers. When drums or barricades are used, the interval between devices may be doubled.

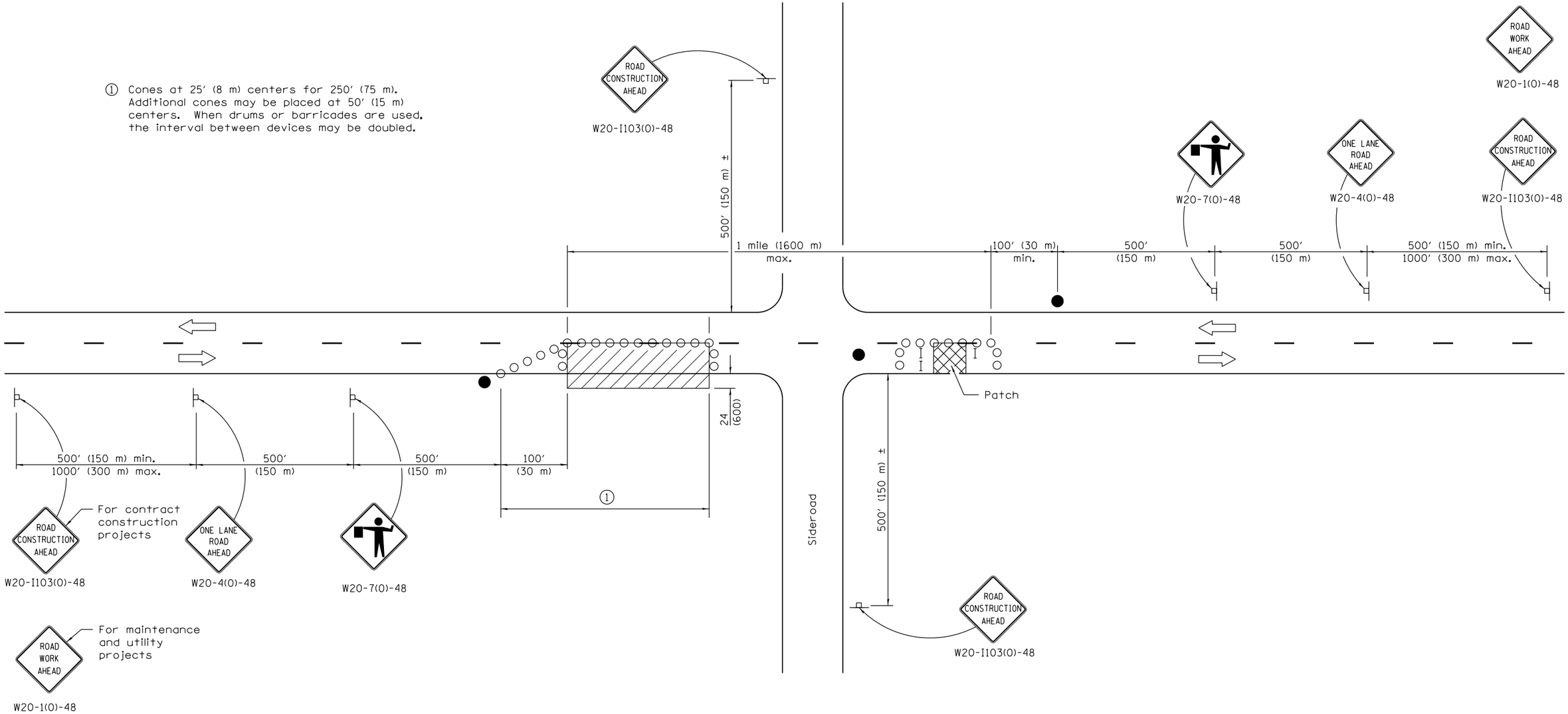

SYMBOLS

- Work area
- Sign
- Barricade or drum
- Cone, drum or barricade
- Flagger with traffic control sign

TYPICAL APPLICATIONS

Isolated patching
Utility operations
Storm sewer
Culverts
Cable placement

GENERAL NOTES

This Standard is used where at any time, any vehicles, equipment, workers or their activities will encroach in the area between the center line and a line 24 (600) outside the edge of pavement for daylight operation.

When the distance between successive work areas exceeds 2000′ (600 m), additional warning signs, flaggers, and taper shall be placed as shown.

All dimensions are in inches (millimeters) unless otherwise shown.

Illinois Department of Transportation

APPROVED January 1, 2011
ENGINEER OF SAFETY ENGINEERING

APPROVED January 1, 2011
ENGINEER OF DESIGN AND ENVIRONMENT

ISSUED 1-1-97

DATE	REVISIONS
1-1-11	Revised flagger sign.
1-1-09	Switched units to
	English (metric).
	Corrected sign No.'s.

LANE CLOSURE, 2L, 2W, DAY ONLY, FOR SPEEDS ≥ 45 MPH

STANDARD 701201–04

For any operation that encroaches in the area between the centerline and a line 24 (600) outside the edge of the pavement for a period of less than 15 minutes.

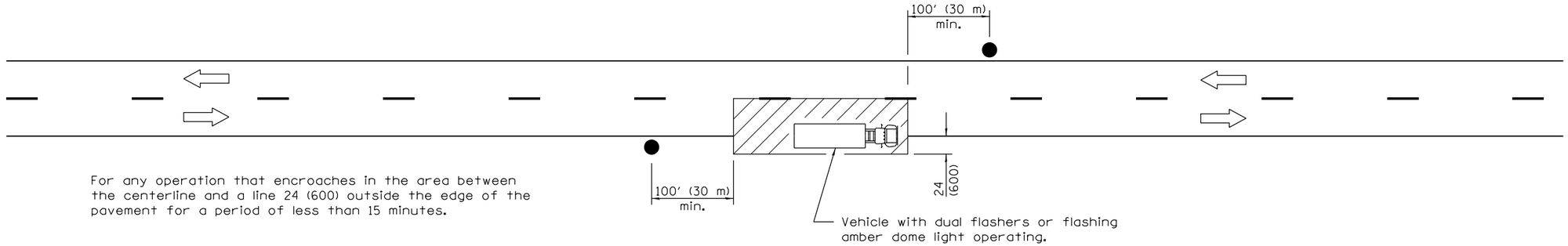

For any operation that is more than 24 (600) outside the edge of the pavement for a period of less than 60 minutes.

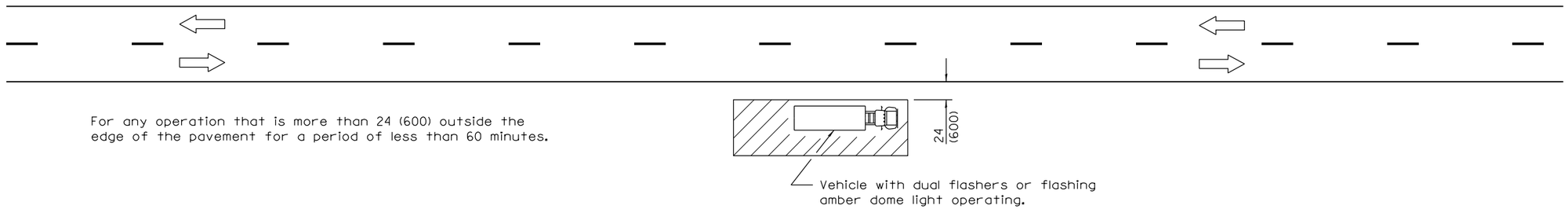

For any operation that encroaches in the area between the centerline and a line 24 (600) outside the edge of the pavement for a period in excess of 15 minutes but less than 60 minutes.

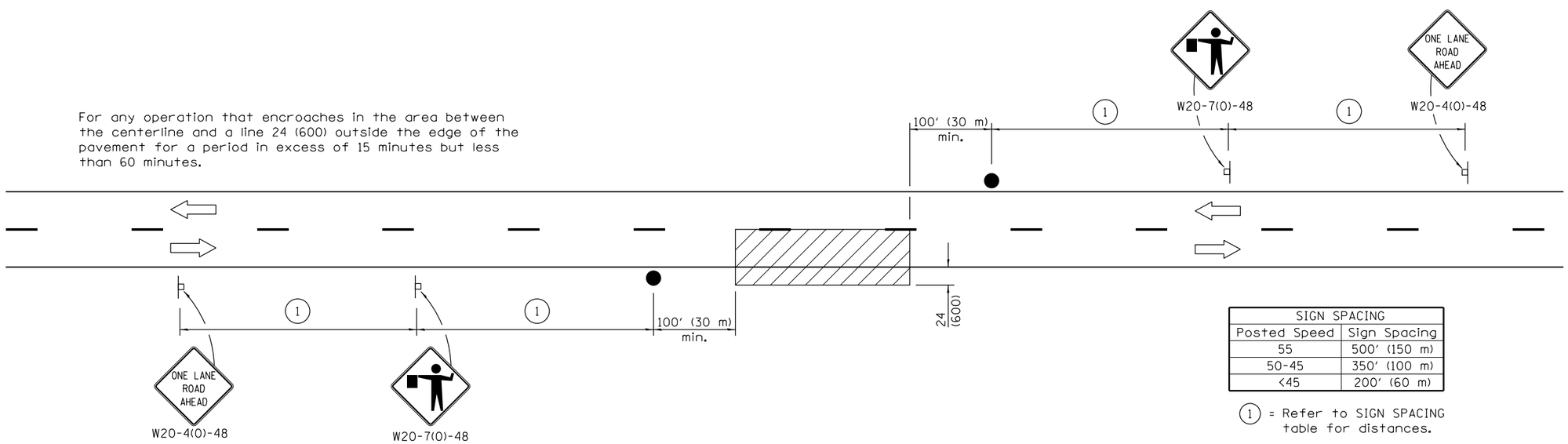

SIGN SPACING	
Posted Speed	Sign Spacing
55	500' (150 m)
50-45	350' (100 m)
<45	200' (60 m)

(1) = Refer to SIGN SPACING table for distances.

All dimensions are in inches (millimeters) unless otherwise shown.

TYPICAL APPLICATIONS

Marking patches
Field survey
String line
Utility operations
Cleaning up debris on pavement

SYMBOLS

Work area

Sign on portable or permanent support

Flagger with traffic control sign

Illinois Department of Transportation

APPROVED January 1, 2011
ENGINEER OF SAFETY ENGINEERING

APPROVED January 1, 2011
ENGINEER OF DESIGN AND ENVIRONMENT

ISSUED 1-1-97

DATE	REVISIONS
1-1-11	Revised flagger sign.
1-1-09	Switched units to
	English (metric).

LANE CLOSURE, 2L, 2W, SHORT TIME OPERATIONS

STANDARD 701301–04

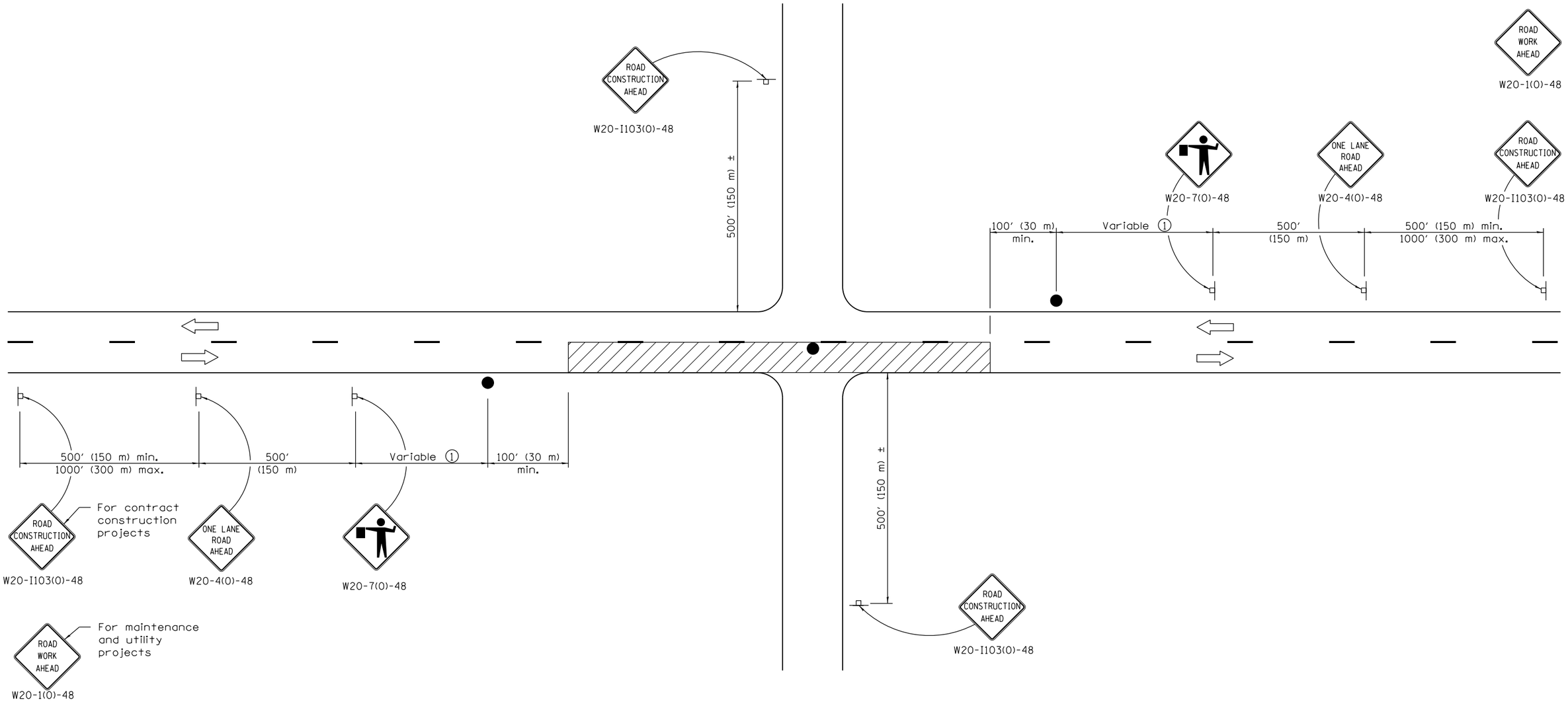

TYPICAL APPLICATIONS

Bituminous resurfacing
Milling operations
Utility operations
Shoulder operations

① Minimum distance is 200′ (60 m). Maximum distance to be determined by the Engineer but should not exceed ½ the length required for one normal working day's operation or 2 miles (3200 m), whichever is less.

SYMBOLS

Work area

Sign on portable or permanent support

Flagger with traffic control sign

GENERAL NOTES

This Standard is used where at any time, any vehicle, equipment, workers or their activities require an intermittent or continuous moving operation on the pavement where the average speed of movement is greater than 1 mph (2 km/h) and less than 4 mph (6 km/h).

When the operation does not exceed 60 minutes, traffic control may be according to Standard 701301.

All dimensions are in inches (millimeters) unless otherwise shown.

Illinois Department of Transportation

APPROVED January 1, 2011
ENGINEER OF SAFETY ENGINEERING

APPROVED January 1, 2011
ENGINEER OF DESIGN AND ENVIRONMENT

ISSUED 1-1-97

DATE	REVISIONS
1-1-11	Revised flagger sign.
1-1-09	Switched units to
	English (metric).
	Corrected sign No.'s.

LANE CLOSURE, 2L, 2W, SLOW MOVING OPERATIONS DAY ONLY, FOR SPEEDS ≥ 45 MPH

STANDARD 701306–03

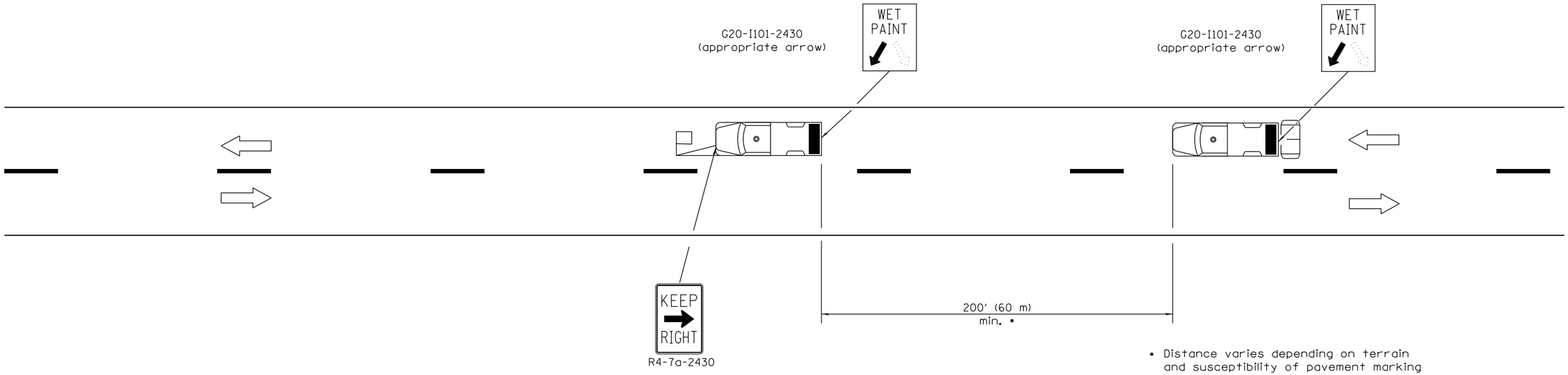

• Distance varies depending on terrain and susceptibility of pavement marking or crack sealant to wheel tracking.

TYPICAL APPLICATIONS

Landscaping work
Utility work
Pavement marking
Weed spraying
Roadometer measurements
Debris cleanup
Crack pouring

SYMBOLS

Arrow board (Hazard Mode only)

Truck with headlights, emergency flashers and flashing amber light. (visible from all directions)

18x18 (450x450) min. orange flag (use when guide wheel is used)

Truck mounted attenuator

GENERAL NOTES

This Standard is used where any vehicle, equipment, workers or their activities will require a continuous moving operation where the average speed is greater than 3 mph (5 km/h).

For shoulder operations not encroaching on the pavement, use DETAIL A, Standard 701426.

All dimensions are in inches (millimeters) unless otherwise shown.

Illinois Department of Transportation

APPROVED January 1, 2009
ENGINEER OF OPERATIONS

APPROVED January 1, 2009
ENGINEER OF DESIGN AND ENVIRONMENT

ISSUED 1-1-97

DATE	REVISIONS
1-1-09	Switched units to
	English (metric). Omitted
	Pass With Care sign.
1-1-00	Elim. speed restrictions
	in Standard title.

LANE CLOSURE 2L, 2W MOVING OPERATIONS–DAY ONLY

STANDARD 701311–03

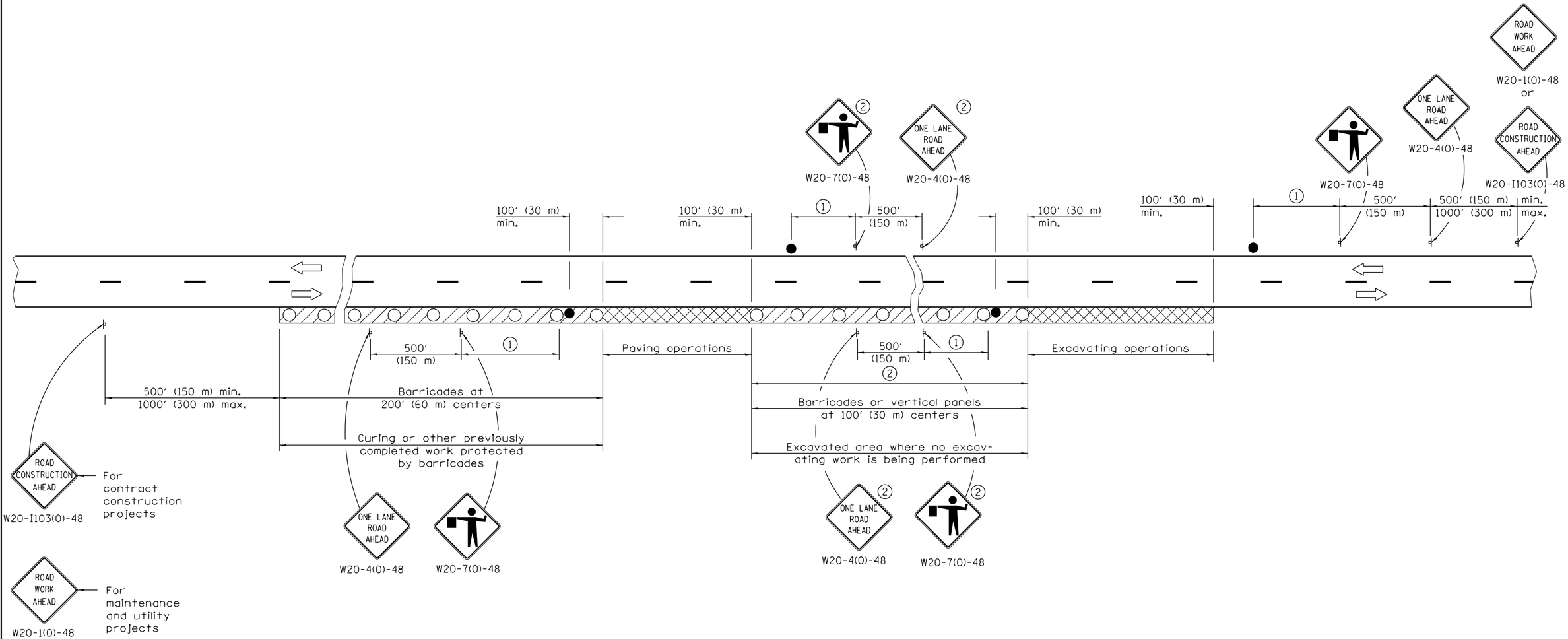

SYMBOLS

- Work area
- Active Work area
- Sign
- Barricade, drum, or vertical panels
- Flagger with traffic control sign

(1) Minimum distance is 200′ (60 m). Maximum distance to be determined by the Engineer but in no case to exceed the length of ½ day's normal operation or 2 miles (3200 m) whichever is less.

(2) Signs are not required if distance between work operations is less than 2000′ (600 m) unless restricted sight distance exists.

GENERAL NOTES

This Standard is used where at any time, any vehicle, equipment, workers or their activities will encroach on the pavement during widening operations.

Two flaggers are required for each separate operation.

All dimensions are in inches (millimeters) unless otherwise shown.

Illinois Department of Transportation

APPROVED January 1, 2011
ENGINEER OF SAFETY ENGINEERING

APPROVED January 1, 2011
ENGINEER OF DESIGN AND ENVIRONMENT

ISSUED 1-1-97

DATE	REVISIONS
1-1-11	Revised flagger sign.
1-1-09	Switched units to
	English (metric).
	Corrected sign No.'s.

LANE CLOSURE, 2L, 2W, PAVEMENT WIDENING, FOR SPEEDS ≥ 45 MPH

STANDARD 701326–04

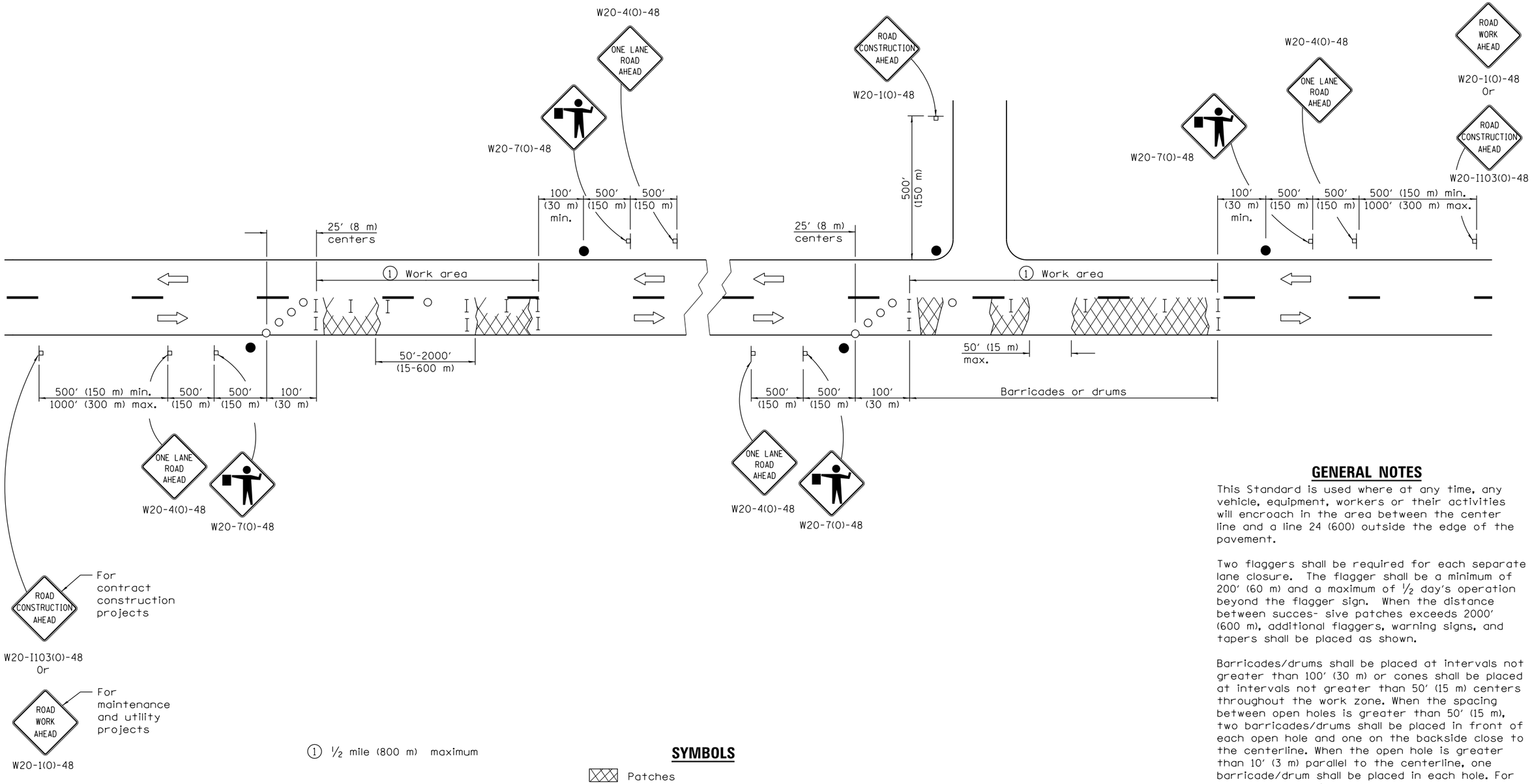

① ½ mile (800 m) maximum

SYMBOLS

- Patches
- Sign
- Flagger with traffic control sign
- Barricade or drum
- Cone, barricade or drum

TYPICAL APPLICATIONS

Patching

GENERAL NOTES

This Standard is used where at any time, any vehicle, equipment, workers or their activities will encroach in the area between the center line and a line 24 (600) outside the edge of the pavement.

Two flaggers shall be required for each separate lane closure. The flagger shall be a minimum of 200′ (60 m) and a maximum of ½ day's operation beyond the flagger sign. When the distance between succes- sive patches exceeds 2000′ (600 m), additional flaggers, warning signs, and tapers shall be placed as shown.

Barricades/drums shall be placed at intervals not greater than 100′ (30 m) or cones shall be placed at intervals not greater than 50′ (15 m) centers throughout the work zone. When the spacing between open holes is greater than 50′ (15 m), two barricades/drums shall be placed in front of each open hole and one on the backside close to the centerline. When the open hole is greater than 10′ (3 m) parallel to the centerline, one barricade/drum shall be placed in each hole. For large holes, barricades/drums shall be placed at 50′ (16 m) centers.

All dimensions are in inches (millimeters) unless otherwise shown.

Illinois Department of Transportation

APPROVED January 1, 2011
ENGINEER OF SAFETY ENGINEERING

APPROVED January 1, 2011
ENGINEER OF DESIGN AND ENVIRONMENT

ISSUED 1-1-97

DATE	REVISIONS
1-1-11	Revised flagger sign.
1-1-09	Switched units to
	English (metric).
	Corrected sign No.'s.

LANE CLOSURE, 2L, 2W, WORK AREAS IN SERIES, FOR SPEEDS ≥ 45 MPH

STANDARD 701336–06

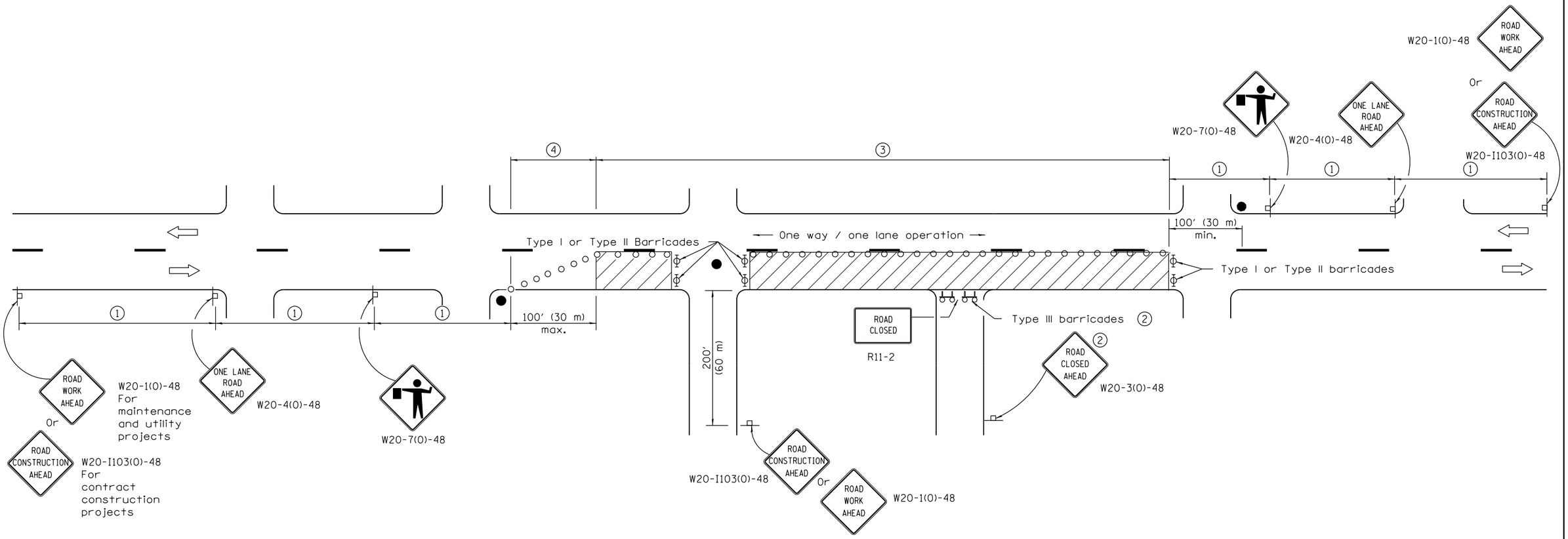

SIGN SPACING	
Posted Speed	Sign Spacing
55	500' (150 m)
50-45	350' (100 m)
<45	200' (60 m)

SYMBOLS

- Work area
- Cone, drum or barricade (not required for moving operations)
- Sign on portable or permanent support
- Flagger with traffic control sign
- Barricade or drum with flashing light
- Type III barricade with flashing lights

1. Refer to SIGN SPACING TABLE for distances.
2. For approved sideroad closures.
3. Cones at 25' (8 m) centers for 250' (75 m). Additional cones may be placed at 50' (15 m) centers. When drums or Type I or Type II barricades are used. the interval between devices may be doubled.
4. Cones, drums or barricades at 20' (6 m) centers.

GENERAL NOTES

This Standard is used where at any time, day or night, any vehicle, equipment, workers or their activities
encroach on the pavement requiring the closure of one traffic lane in an urban area.

All dimensions are in inches (millimeters) unless otherwise shown.

Illinois Department of Transportation

APPROVED January 1, 2011
ENGINEER OF SAFETY ENGINEERING
APPROVED January 1, 2011
ENGINEER OF DESIGN AND ENVIRONMENT

ISSUED 1-1-97

DATE	REVISIONS
1-1-11	Revised flagger sign.
1-1-09	Switched units to
	English (metric).
	Corrected sign No.'s.

URBAN LANE CLOSURE, 2L, 2W, UNDIVIDED

STANDARD 701501–06

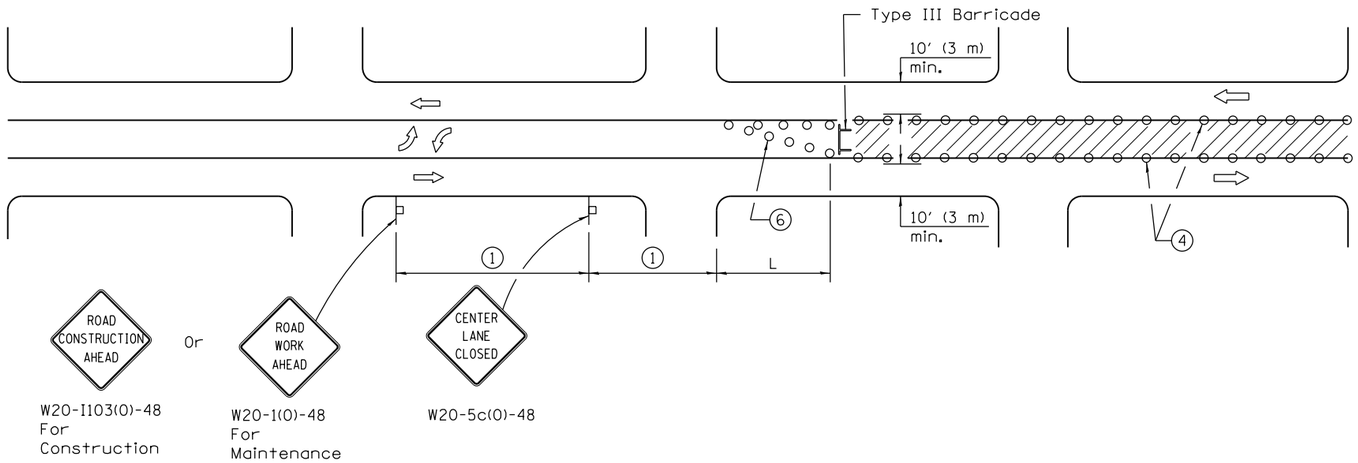

CASE I

(Signs required for both directions)

SIGN SPACING	
Posted Speed	Sign Spacing
55	500' (150 m)
50-45	350' (100 m)
<45	200' (60 m)

SYMBOLS

- Work area
- Barricade or drum with flashing light
- Flagger with traffic control sign
- Cone, drum or barricade (Cones for daytime use only)
- Sign on portable or permanent support

1. Refer to SIGN SPACING TABLE for distances.
2. Required for speeds > 40 mph (70 km/h).
3. Required if work exceeds 500' (164 m) or 1 block.
4. Cones at 25' (8 m) centers for 250' (75 m). Additional cones may be placed at 15 m (50') centers. When drums or type I or II barricades are used, the interval between devices may be doubled.
5. For approved sideroad closures.
6. Cones, drums or barricades at 20' (6 m) centers in taper.
7. Use flagger sign only when flagger is present.

GENERAL NOTES

This Standard is used to close one lane of an urban, two lane, two way roadway with a bidirectional turn lane.

Case I applies when no workers are present. When workers are present, two lanes shall be closed and traffic control shall be according to Standard 701501.

Calculate L as follows:

SPEED LIMIT	FORMULAS English	FORMULAS (Metric)
40 mph (70 km/h) or less:	$L = \frac{WS^2}{60}$	$L = \frac{WS^2}{150}$
45 mph (80 km/h) or greater:	L=(W)(S)	L=0.65(W)(S)

W = Width of offset in feet (meters).

S = Normal posted speed mph (km/h).

All dimensions are in inches (millimeters) unless otherwise shown.

Illinois Department of Transportation

APPROVED January 1, 2014
ENGINEER OF SAFETY ENGINEERING
APPROVED January 1, 2014
ENGINEER OF DESIGN AND ENVIRONMENT

ISSUED 1-1-01

DATE	REVISIONS
1-1-14	Omitted original note 4.
	Rev. workers sign no. to
	agree with current MUTCD.
1-1-13	Omitted text 'WORKERS'
	sign.

URBAN LANE CLOSURE, 2L, 2W, WITH BIDIRECTIONAL LEFT TURN LANE

(Sheet 1 of 2)

STANDARD 701502–06

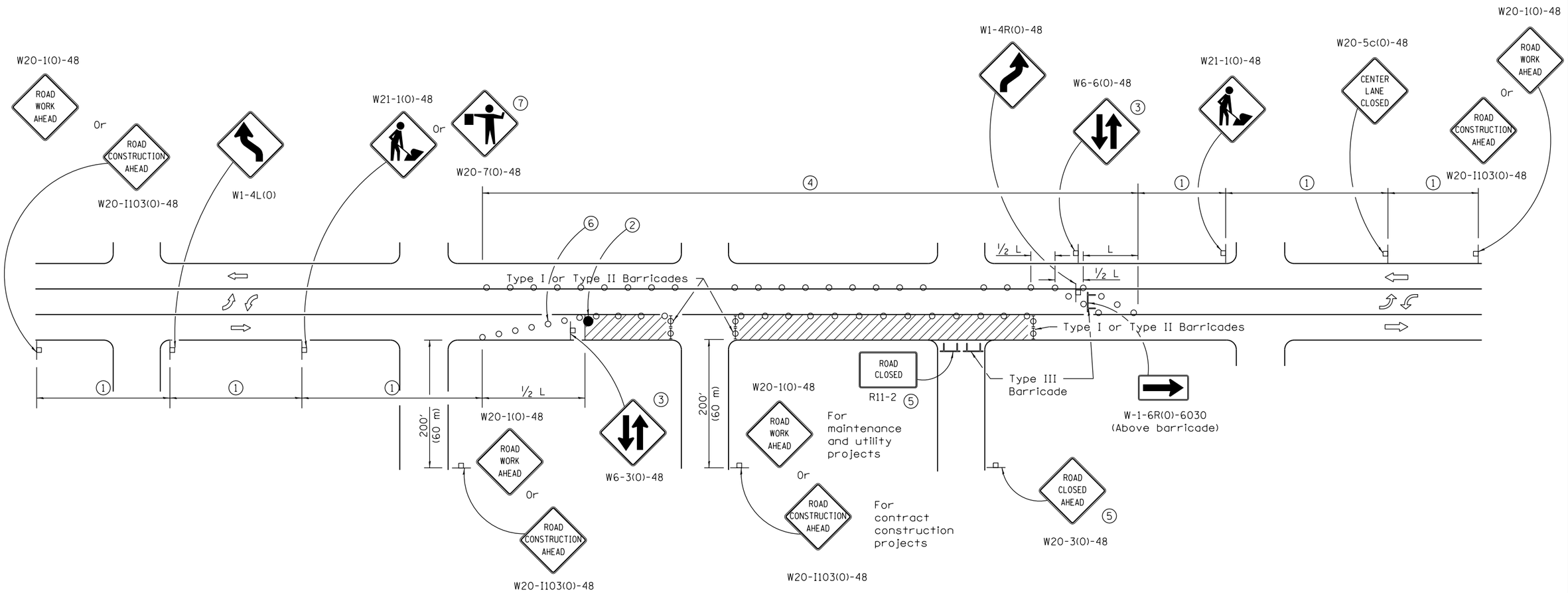

CASE II

Illinois Department of Transportation

APPROVED January 1, 2014
ENGINEER OF SAFETY ENGINEERING

APPROVED January 1, 2014
ENGINEER OF DESIGN AND ENVIRONMENT

ISSUED 1-1-10

URBAN LANE CLOSURE, 2L, 2W, WITH BIDIRECTIONAL LEFT TURN LANE

(Sheet 2 of 2)

STANDARD 701502–06

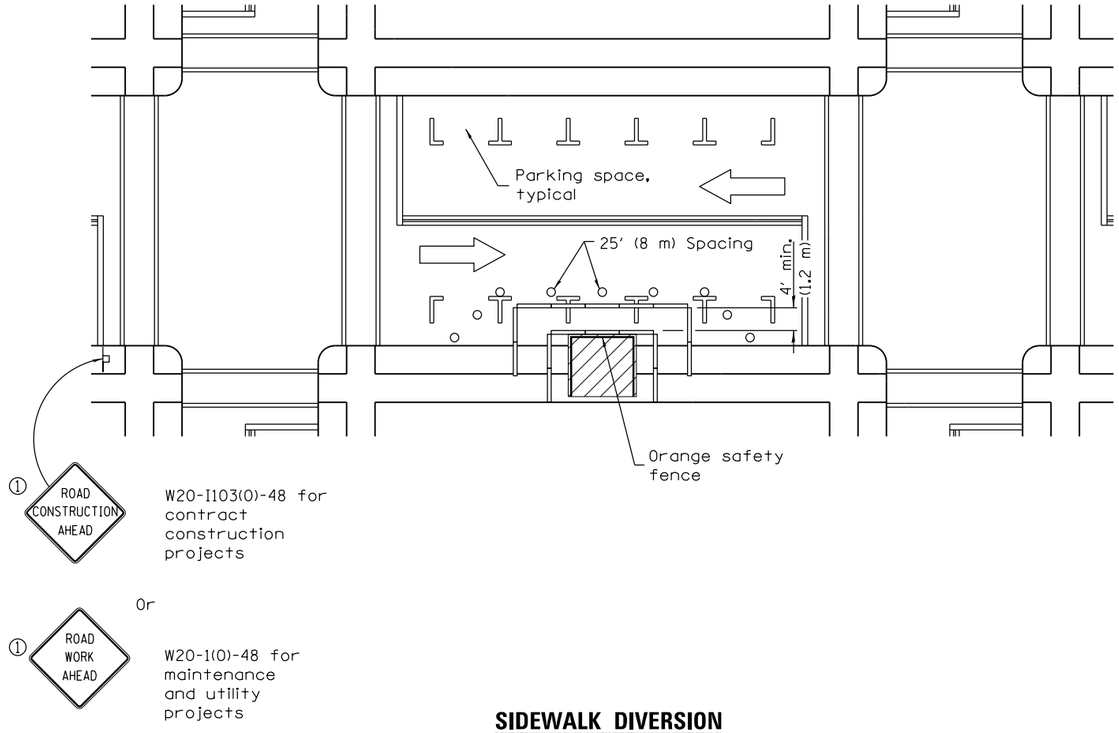

① Omit whenever duplicated by road work traffic control.

SIDEWALK DIVERSION

SYMBOLS

- Work area
- Sign on portable or permanent support
- Barricade or drum
- Cone, drum or barricade
- Type III barricade
- Detectable pedestrian channelizing barricade

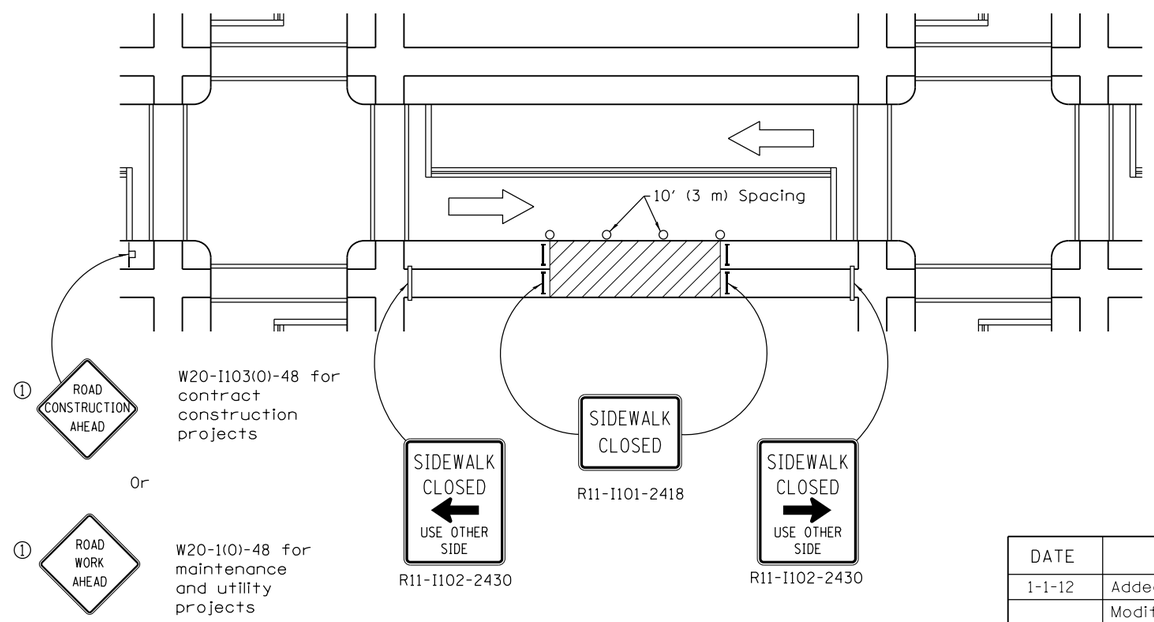

SIDEWALK CLOSURE

GENERAL NOTES

This Standard is used where, at any time, pedestrian traffic must be rerouted due to work being performed.

This Standard must be used in conjunction with other Traffic Control & Protection Standards when roadway traffic is affected.

Temporary facilities shall be detectable and accessible.

The temporary pedestrian facilities shall be provided on the same side of the closed facilities whenever possible.

The SIDEWALK CLOSED / USE OTHER SIDE sign shall be placed at the nearest crosswalk or intersection to each end of the closure. Where the closure occurs at a corner, the signs shall be erected on the corners across the street from the closure. The SIDEWALK CLOSED signs shall be used at the ends of the actual closures.

Type III barricades and R11-2-4830 signs shall be positioned as shown in "ROAD CLOSED TO ALL TRAFFIC" detail on Standard 701901.

All dimensions are in inches (millimeters) unless otherwise shown.

DATE	REVISIONS
1-1-12	Added SIDEWALK DIVERSION.
	Modified appearance of
	plan views. Renamed Std.
1-1-09	Switched units to
	English (metric),
	702001 to 701901.

Illinois Department of Transportation

APPROVED January 1, 2012
ENGINEER OF SAFETY ENGINEERING
APPROVED January 1, 2012
ENGINEER OF DESIGN AND ENVIRONMENT

ISSUED 1-1-97

SIDEWALK, CORNER OR CROSSWALK CLOSURE

(Sheet 1 of 2)

STANDARD 701801-05

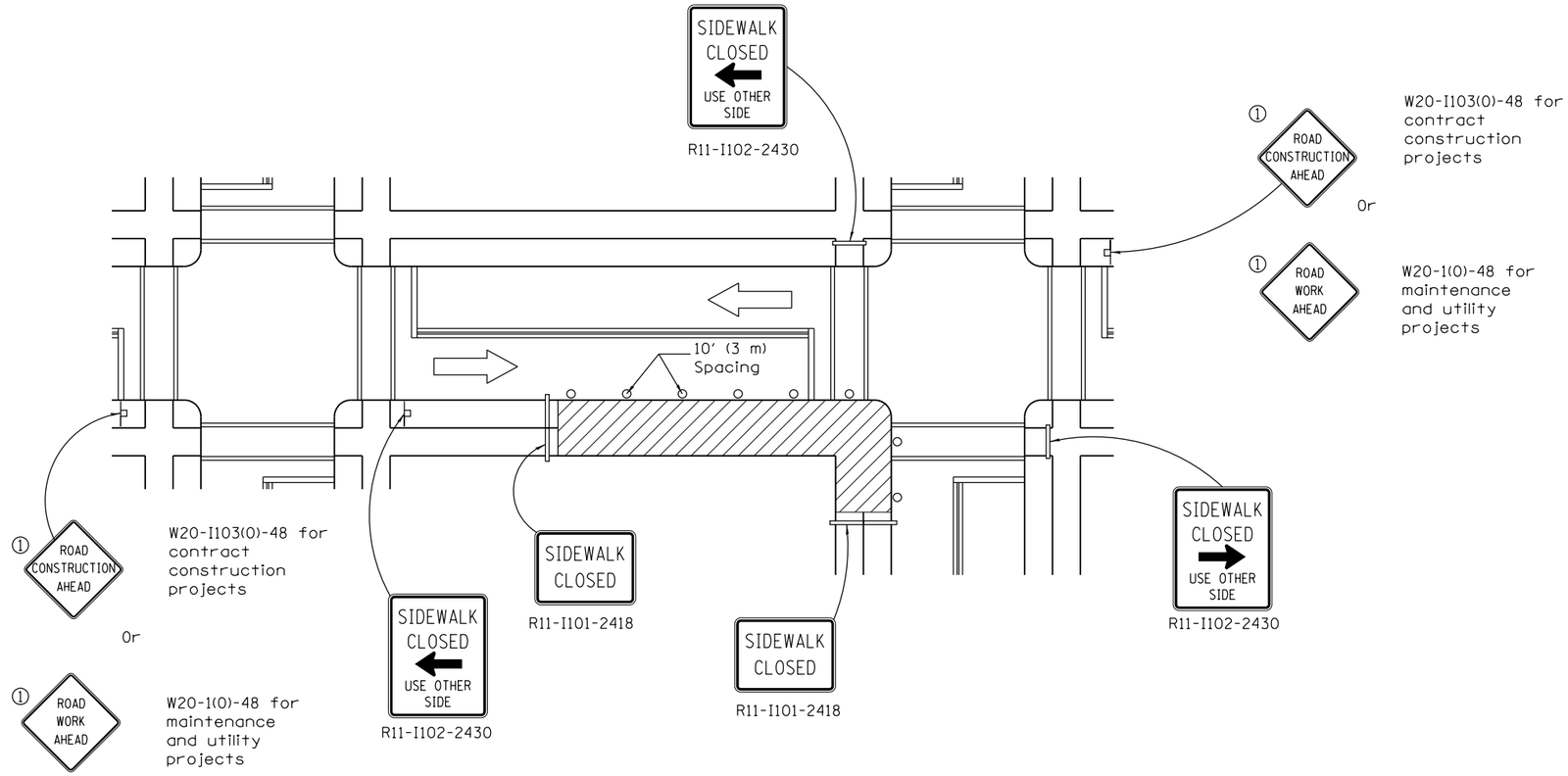

CORNER CLOSURE

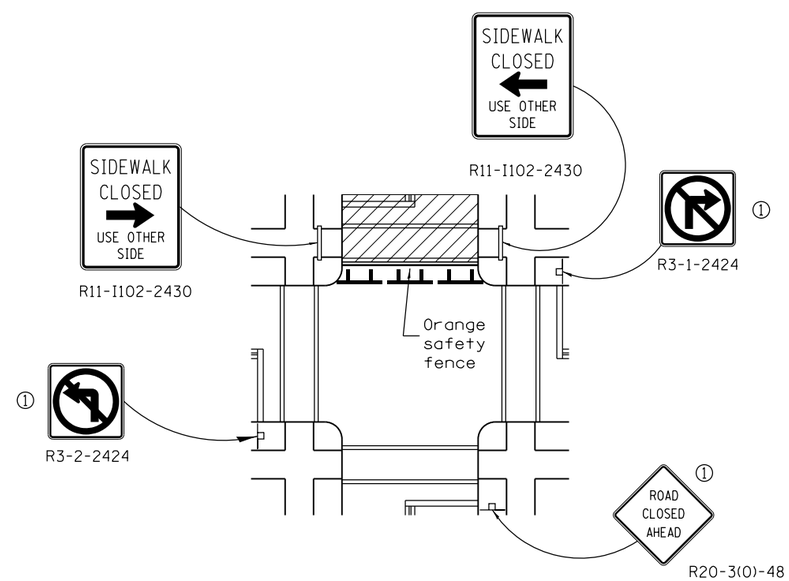

CROSSWALK CLOSURE

Illinois Department of Transportation

APPROVED January 1, 2012
ENGINEER OF SAFETY ENGINEERING
APPROVED January 1, 2012
ENGINEER OF DESIGN AND ENVIRONMENT

ISSUED 1-1-97

SIDEWALK, CORNER OR CROSSWALK CLOSURE

(Sheet 2 of 2)

STANDARD 701801–05

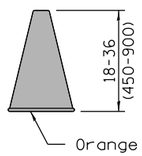

CONE

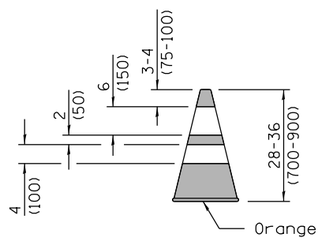

REFLECTORIZED CONE

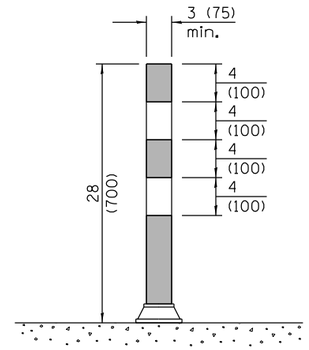

FLEXIBLE DELINEATOR

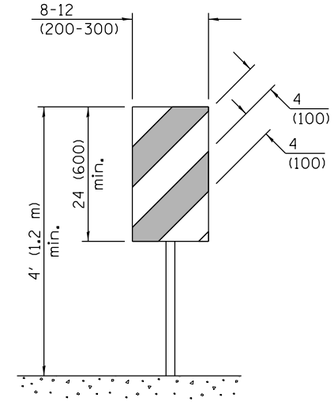

VERTICAL PANEL
POST MOUNTED

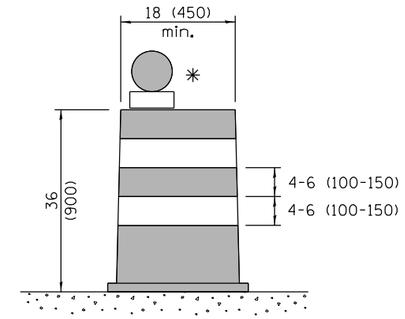

DRUM

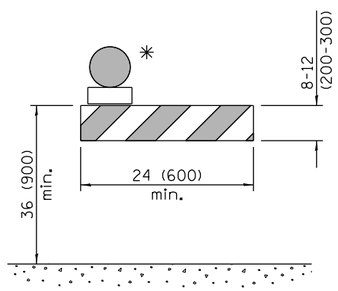

TYPE I BARRICADE

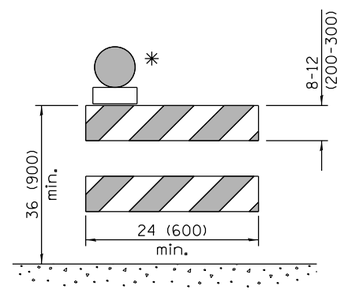

TYPE II BARRICADE

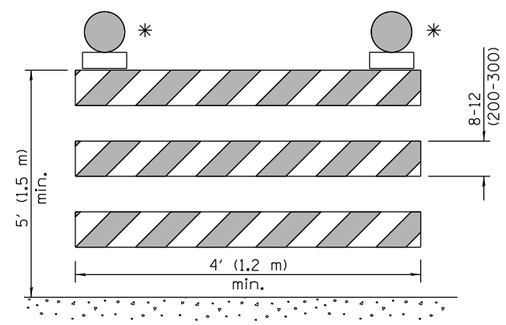

TYPE III BARRICADE

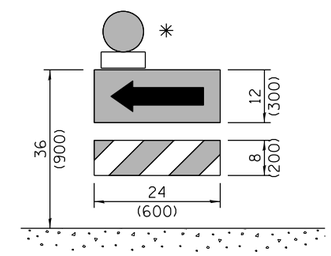

DIRECTION INDICATOR BARRICADE

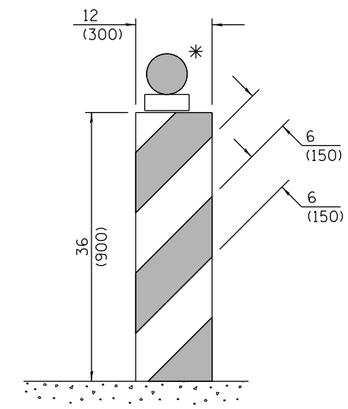

VERTICAL BARRICADE

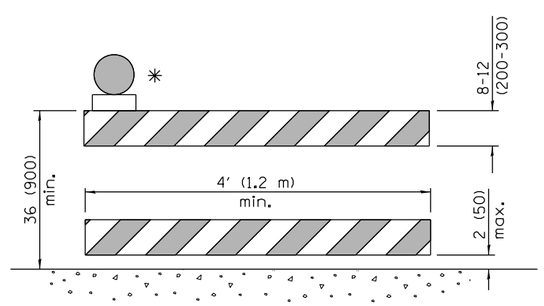

DETECTABLE PEDESTRIAN CHANNELIZING BARRICADE

✳ Warning lights (if required)

GENERAL NOTES

All heights shown shall be measured above the pavement surface.

All dimensions are in inches (millimeters) unless otherwise shown.

Illinois Department of Transportation

APPROVED January 1, 2015
ENGINEER OF OPERATIONS

APPROVED January 1, 2015
ENGINEER OF DESIGN AND ENVIRONMENT

ISSUED 1-1-97

DATE	REVISIONS
1-1-15	Revised two sign numbers on
	sheet 2. Added note reg.
	PHOTO ENFORCED plaque.
1-1-14	Modified flagger sign height.
	Added highway construction
	speed zone signs.

TRAFFIC CONTROL DEVICES

(Sheet 1 of 3)

STANDARD 701901–04

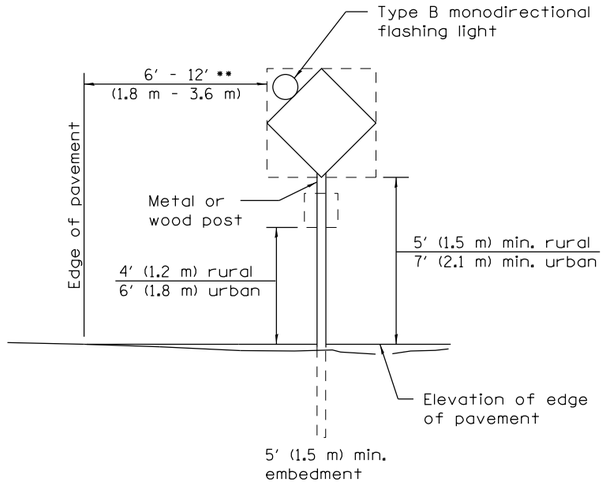

POST MOUNTED SIGNS

•• When curb or paved shoulder are present this dimension shall be 24 (600) to the face of curb or 6′ (1.8 m) to the outside edge of the paved shoulder.

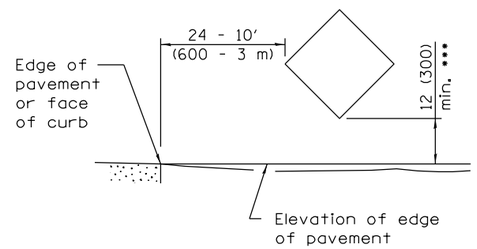

SIGNS ON TEMPORARY SUPPORTS

••• When work operations exceed four days, this dimension shall be 5′ (1.5 m) min. If located behind other devices, the height shall be sufficient to be seen completely above the devices.

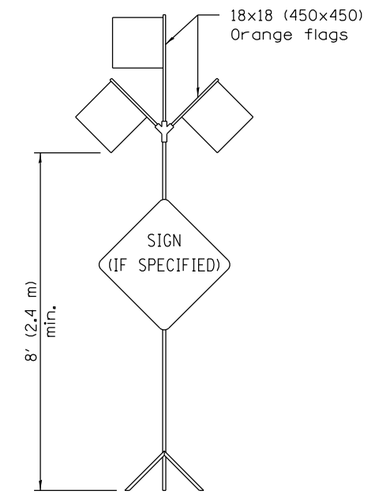

HIGH LEVEL WARNING DEVICE

G20-I104(0)-6036 G20-I105(0)-6024

This signing is required for all projects 2 miles (3200 m) or more in length.

ROAD CONSTRUCTION NEXT X MILES sign shall be placed 500′ (150 m) in advance of project limits.

END CONSTRUCTION sign shall be erected at the end of the job unless another job is within 2 miles (3200 m).

Dual sign displays shall be utilized on multi-lane highways.

WORK LIMIT SIGNING

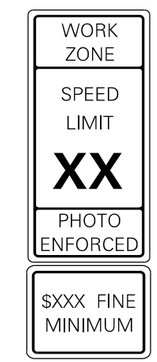

W21-I115(0)-3618

R2-1-3648

R10-I108p-3618 ••••

R2-I106p-3618

Sign assembly as shown on Standards or as allowed by District Operations.

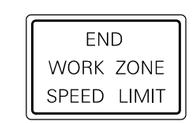

G20-I103(0)-6036

This sign shall be used when the above sign assembly is used.

HIGHWAY CONSTRUCTION SPEED ZONE SIGNS

•••• R10-I108p shall only be used along roadways under the juristiction of the State.

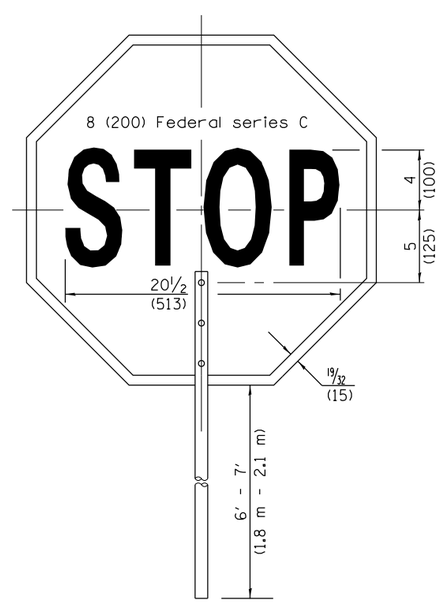

FRONT SIDE

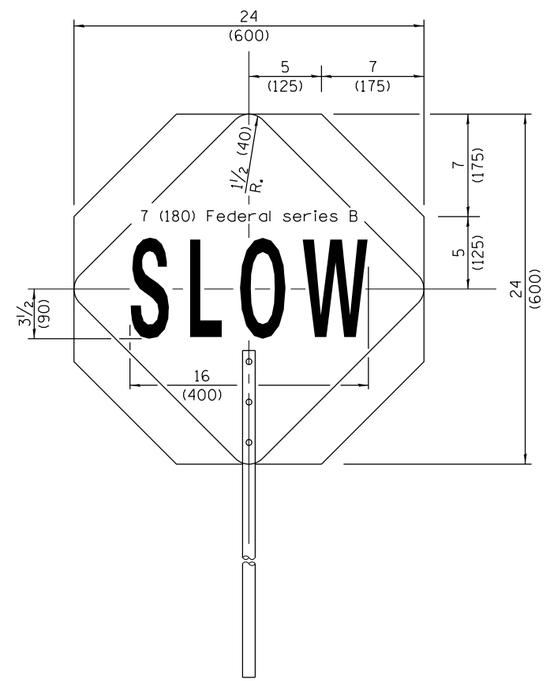

REVERSE SIDE

FLAGGER TRAFFIC CONTROL SIGN

Illinois Department of Transportation

APPROVED January 1, 2015
ENGINEER OF OPERATIONS

APPROVED January 1, 2015
ENGINEER OF DESIGN AND ENVIRONMENT

ISSUED 1-1-97

TRAFFIC CONTROL DEVICES

(Sheet 2 of 3)

STANDARD 701901–04

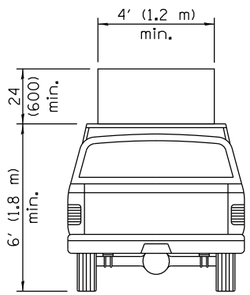

TYPE A ROOF MOUNTED

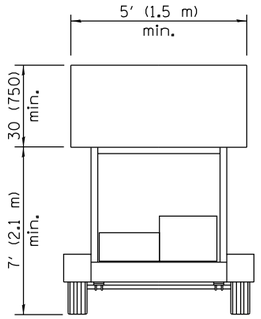

TYPE B ROOF OR TRAILER MOUNTED

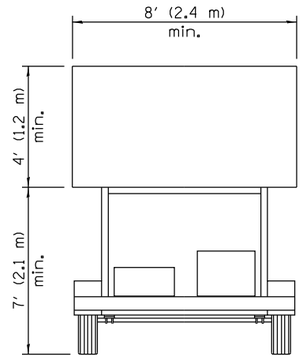

TYPE C TRAILER MOUNTED

ARROW BOARDS

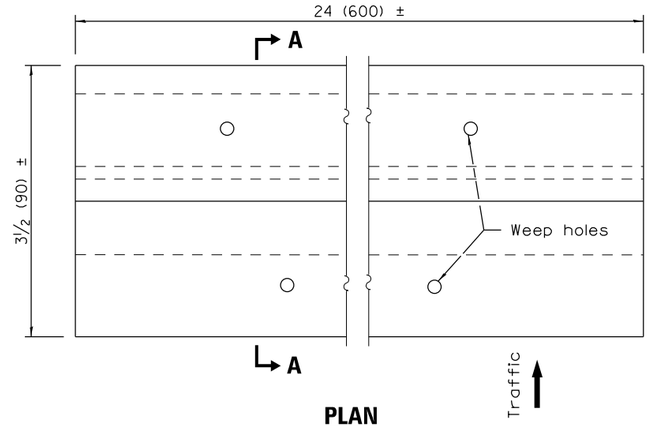

PLAN

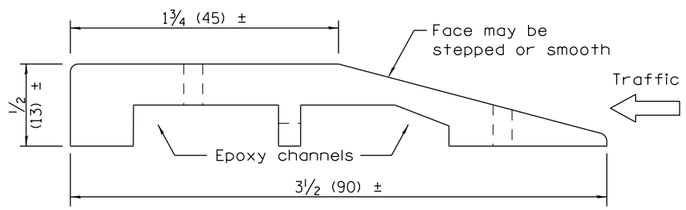

SECTION A–A

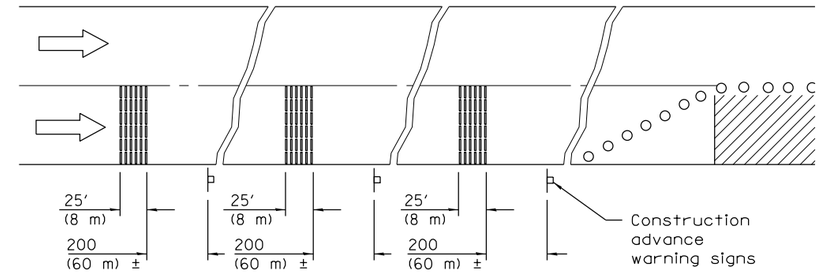

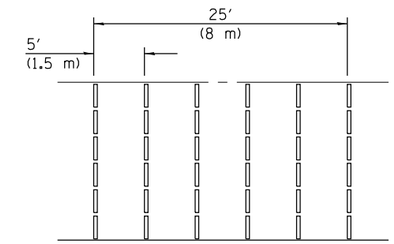

TYPICAL INSTALLATION

TEMPORARY RUMBLE STRIPS

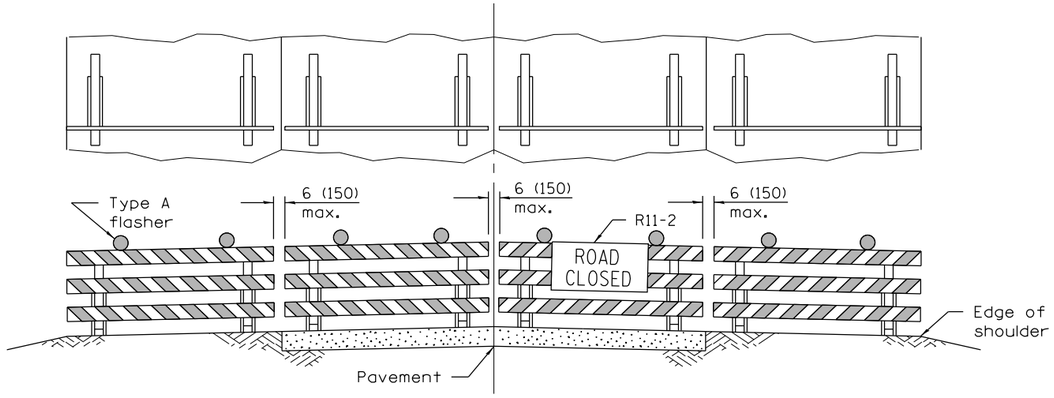

ROAD CLOSED TO ALL TRAFFIC

Reflectorized striping may be omitted on the back side of the barricades. If a Type III barricade with an attached sign panel which meets NCHRP 350 is not available, the sign may be mounted on an NCHRP 350 temporary sign support directly in front of the barricade.

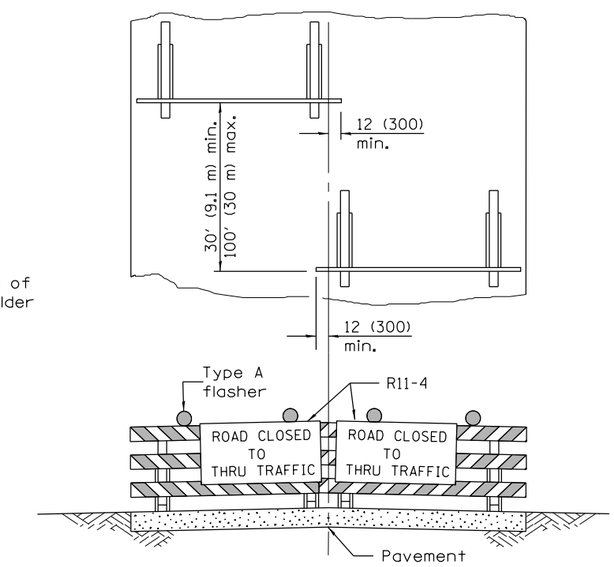

ROAD CLOSED TO THRU TRAFFIC

Reflectorized striping shall appear on both sides of the barricades. If a Type III barricade with an attached sign panel which meets NCHRP 350 is not available, the signs may be mounted on NCHRP 350 temporary sign supports directly in front of the barricade.

TYPICAL APPLICATIONS OF TYPE III BARRICADES CLOSING A ROAD

Illinois Department of Transportation

APPROVED January 1, 2015
ENGINEER OF OPERATIONS

APPROVED January 1, 2015
ENGINEER OF DESIGN AND ENVIRONMENT

ISSUED 1-1-97

TRAFFIC CONTROL DEVICES

(Sheet 3 of 3)

STANDARD 701901–04

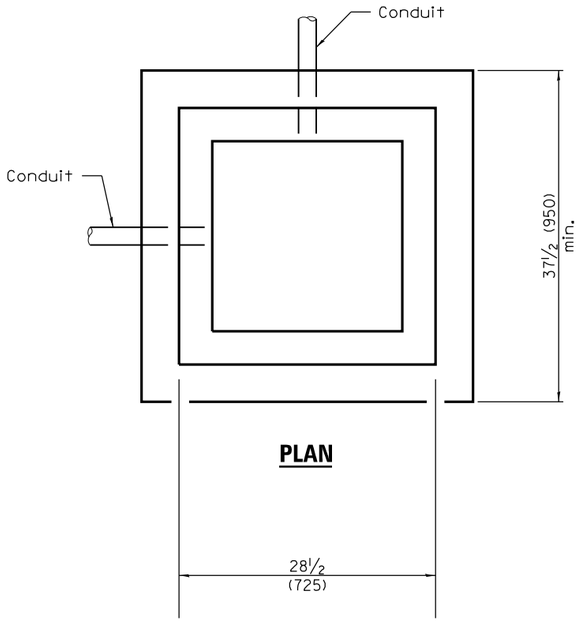

PLAN

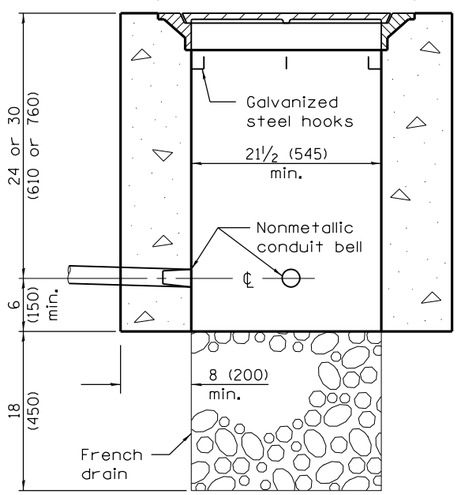

ELEVATION

PORTLAND CEMENT CONCRETE

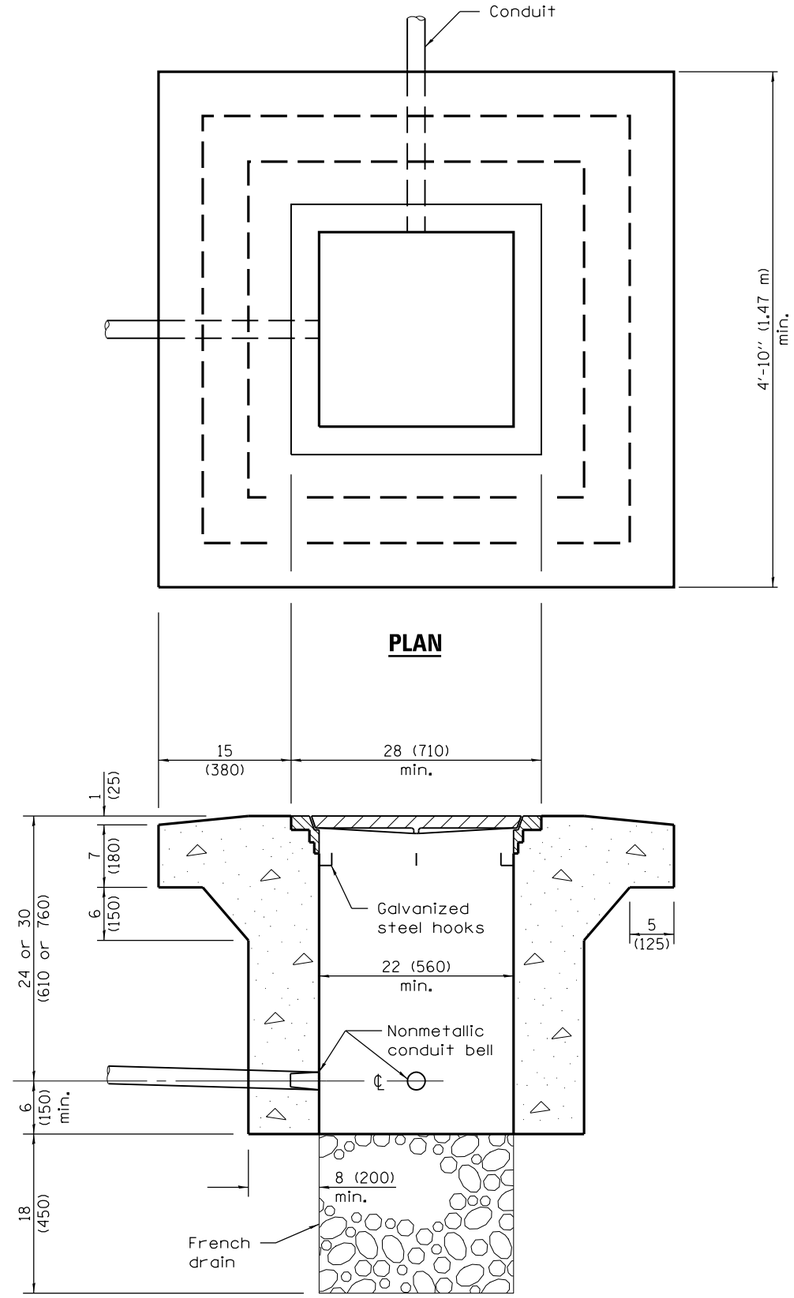

PLAN

ELEVATION

PORTLAND CEMENT CONCRETE HEAVY DUTY

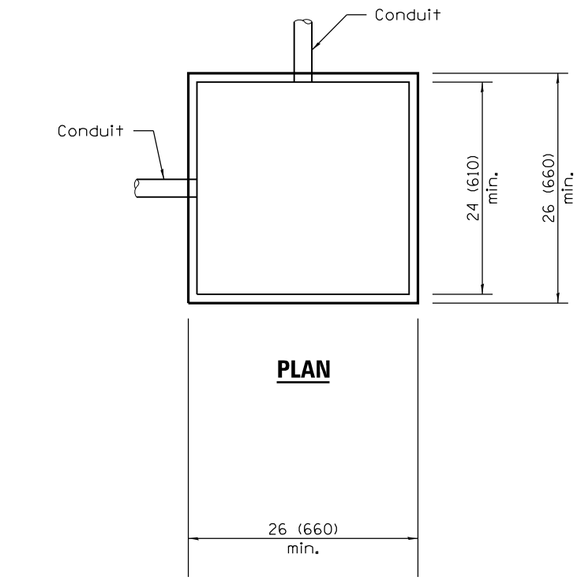

PLAN

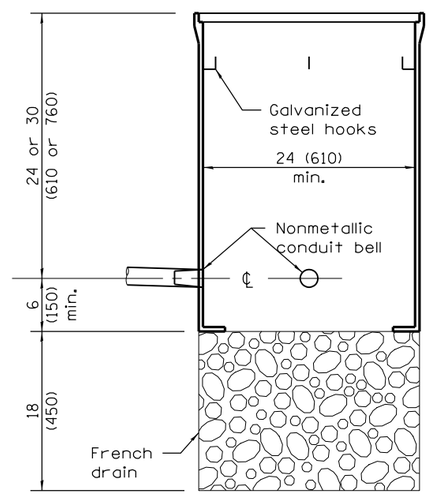

ELEVATION

COMPOSITE CONCRETE

All dimensions are in inches (millimeters) unless otherwise shown.

QUANTITIES

Depth	Concrete yd³ (m³) Handhole	Concrete yd³ (m³) Heavy Duty Handhole
30 (762)	0.61 (0.47)	0.98 (0.75)
36 (914)	0.73 (0.56)	1.10 (0.84)

Illinois Department of Transportation

APPROVED January 1, 2015
ENGINEER OF OPERATIONS

APPROVED January 1, 2015
ENGINEER OF DESIGN AND ENVIRONMENT

ISSUED 1-1-97

DATE	REVISIONS
1-1-15	Corrected dimension on
	heavy duty handhole. Added
	concrete quantities table.
1-1-09	Switched units to
	English (metric).

HANDHOLES

STANDARD 814001–03

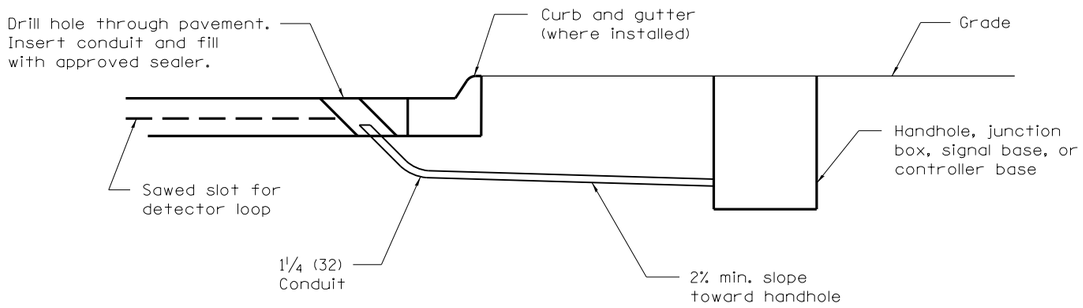

DETECTOR LOOP LEAD–IN

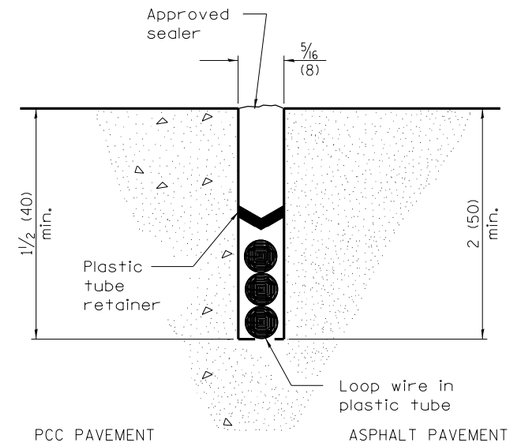

DETECTOR LOOP INSTALLATION

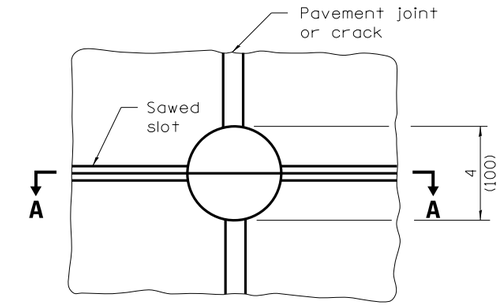

PLAN

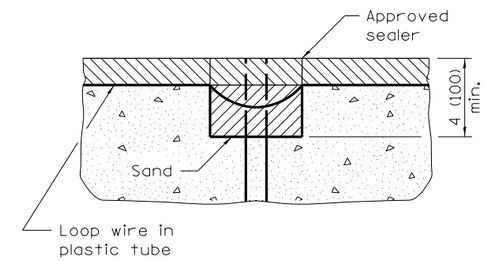

SECTION A–A

NOTE
Loop wire shall follow saw cut to bottom, forming slack section at joint.

DETECTOR LOOP AT PAVEMENT JOINT OR PAVEMENT CRACK

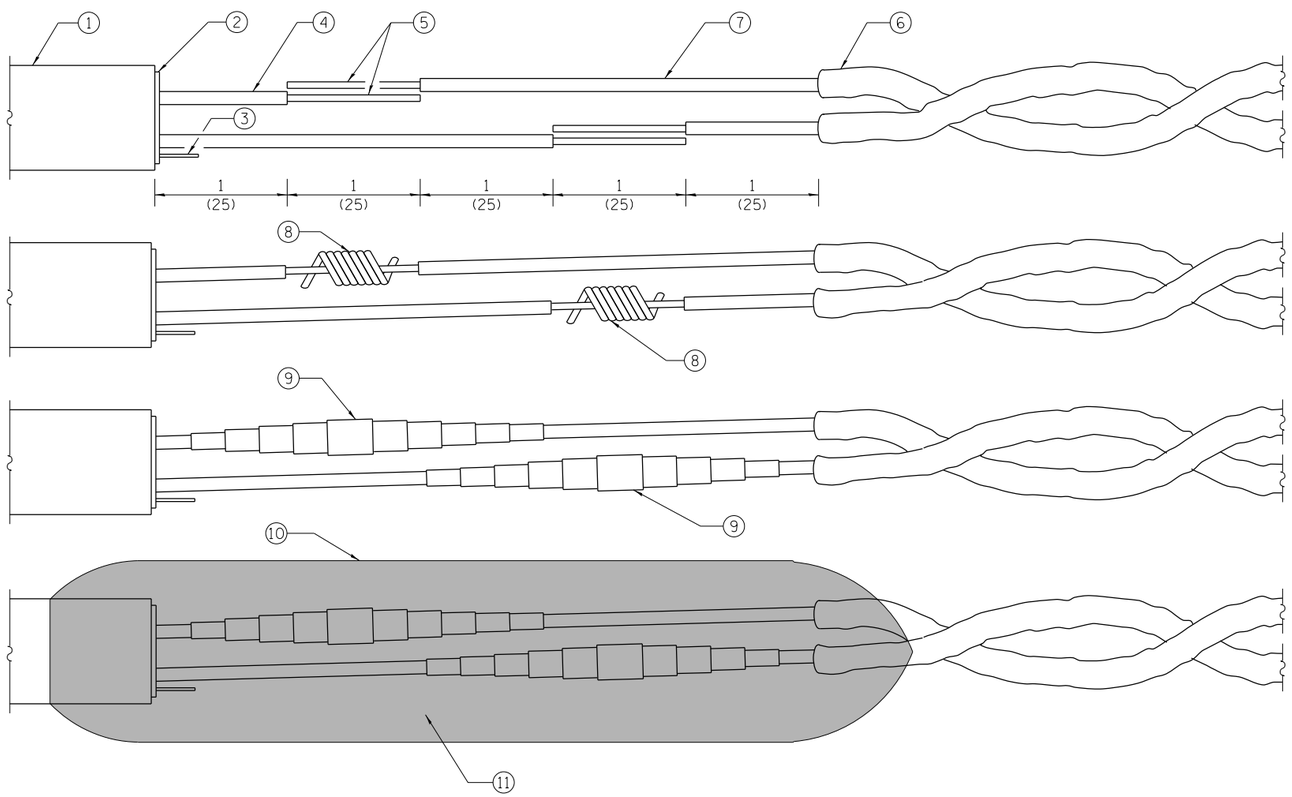

LOOP WIRE AND LEAD–IN CABLE SPLICE

① = Lead-in cable (single pair or multipair)
② = Lead-in cable shield
③ = Lead-in cable shield drain-wire
④ = Lead-in cable insulated conductor
⑤ = Bare conductor
⑥ = Loop wire in tube
⑦ = Loop wire insulated conductor
⑧ = Twisted and resin soldered conductor
⑨ = Electrical tape insulated spice
⑩ = Rigid mold
⑪ = Waterproof and dielectric resin

All dimensions are in inches (millimeters) unless otherwise shown.

Illinois Department of Transportation

APPROVED January 1, 2009
ENGINEER OF OPERATIONS
APPROVED January 1, 2009
ENGINEER OF DESIGN AND ENVIRONMENT

ISSUED 1-1-02

DATE	REVISIONS
1-1-09	Switched units to English (metric)
1-1-02	Renum. Standard 846001.

DETECTOR LOOP INSTALLATIONS

STANDARD 886001–01

NOTE: DETAILS ARE NOT TO BE CHANGED IN ANY WAY. LEAVE ALL DETAILS ON SHEET EVEN IF THEY DO NOT APPLY TO CURRENT IMPROVEMENTS. CHANGING OF DETAILS DOES NOT CHANGE REQUIREMENTS.

EXHIBIT NO. 1

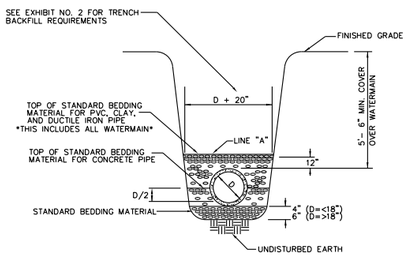

NOTES:
1. STANDARD BEDDING MATERIAL FOR NON-PLASTIC PIPE INCLUDING ALL WATERMAIN SHALL BE 1/4" TO 3/4" CRUSHED STONE, ASTM 448, SIZE CA-7 TO CA-11.
2. STANDARD BEDDING MATERIAL FOR PLASTIC PIPE SHALL CONFORM TO ASTM D2321, CLASS II NON-ANGULAR AGGREGATE.
3. SELECT, WELL COMPACTED EXCAVATED MATERIAL SHALL BE PLACED TO LINE "A" IF STANDARD BEDDING MATERIAL IS NOT REQUIRED TO LINE "A."
4. VOIDS LEFT BY SHEETING SHALL BE FILLED WITH STANDARD BEDDING MATERIAL AS THE SHEETING IS REMOVED.

TYPICAL TRENCH AND STANDARD BEDDING

EXHIBIT NO. 2

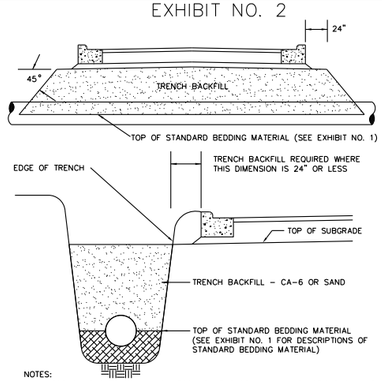

NOTES:
1. TRENCH BACKFILL SHALL CONFORM TO THE PROVISIONS OF ARTICLE 208 OF THE STANDARD SPECIFICATIONS FOR ROAD AND BRIDGE CONSTRUCTION.
2. TRENCH DIMENSIONS AS DETAILED ELSEWHERE SHALL BE USED TO CALCULATE PAYMENT LIMITS. ADDITIONAL TRENCH BACKFILL NECESSARY TO FILL A TRENCH WIDER THAN THAT DETAILED SHALL BE PROVIDED AND PLACED AT NO ADDITIONAL COST TO THE DEVELOPER, OWNER, OR VILLAGE.

TRENCH BACKFILL

EXHIBIT NO. 3

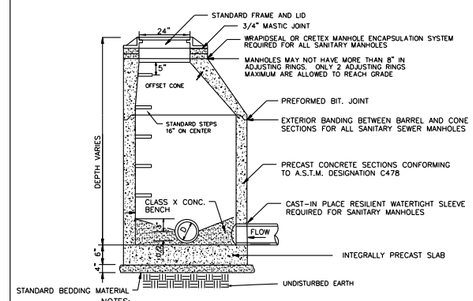

NOTES:
1. FOR SEWERS 24 INCHES OR LESS IN DIAMETER, USE 48 INCH MANHOLES; FOR SEWERS MORE THAN 24" INCHES IN DIAMETER, USE 60" INCH MANHOLES.
2. FOR VITRIFIED CLAY PIPE SEWERS, LOCATE A BELL OR SPIGOT AS APPROPRIATE JUST OUTSIDE THE MANHOLE WALL TO PROVIDE A PIVOT POINT FOR ANY DIFFERENT MOVEMENT.
3. WRAPIDSEAL MANHOLE ENCAPSULATION SYSTEM REQUIRED FOR ALL SANITARY SEWER MANHOLES. (SEE EXHIBIT NO. 4)
4. WATER TIGHT SEALENT REQUIRED FOR ALL SANITARY SEWER MANHOLES.

STANDARD MANHOLE

EXHIBIT NO. 4

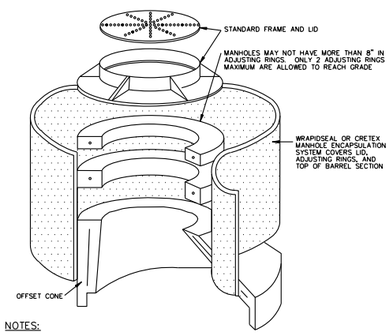

NOTES:
1. WRAPIDSEAL OR CRETEX SHALL BE INSTALLED ON ALL SANITARY SEWER MANHOLES.
2. WRAPIDSEAL OR CRETEX MANHOLE ENCAPSULATION SYSTEMS ARE REQUIRED, ANY OTHER PRODUCTS OR OTHER DESIGN SOLUTIONS SHALL REQUIRE THE APPROVAL OF THE VILLAGE ENGINEER OR DIRECTOR OF PUBLIC WORKS.
3. WRAPIDSEAL OR CRETEX SHALL BE INSTALLED IN ACCORDANCE WITH MANUFACTURER'S GUIDELINES AND INSTRUCTIONS.

WRAPIDSEAL MANHOLE ENCAPSULATION SYSTEM

EXHIBIT NO. 5

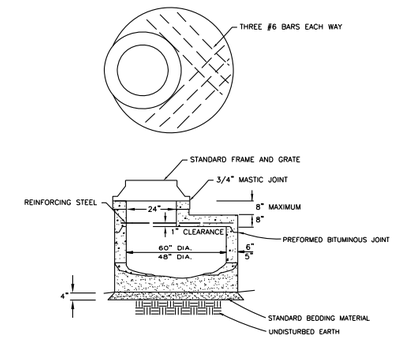

NOTES:
1. A 6" THICK SLAB TOP MAY BE ALLOWED FOR 48" DIAMETER RESTRICTED DEPTH CATCH BASINS NOT IN PAVEMENT.
2. A WRAPIDSEAL MANHOLE ENCAPSULATION SYSTEM SHALL BE REQUIRED IN LOCATIONS WHERE WRAPIDSEAL IS CALLED FOR.
3. NO STEPS ARE REQUIRED IN RESTRICTED DEPTH CATCH MANHOLES.

FLAT TOP FOR RESTRICTED DEPTH MANHOLE

EXHIBIT NO. 7

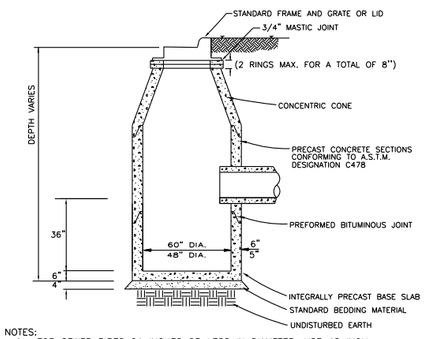

NOTES:
1. FOR SEWER PIPES 24 INCHES OR LESS IN DIAMETER, USE 48 INCH DIAMETER CATCH BASIN: FOR SEWER PIPES MORE THAN 24 INCHES IN DIAMETER, USE 60 INCH DIAMETER CATCH BASIN.
2. OUTLET PIPE SHALL BE NO LESS THAN 12 INCHES IN DIAMETER.
3. STEPS ARE REQUIRED IF THE CATCH BASIN IS OVER 7' IN DEPTH.
4. STEPS ARE TO BE 16" ON CENTER, ON THE OPPOSITE SIDE FROM THE OUTLET PIPE.

CATCH BASIN

EXHIBIT NO. 8

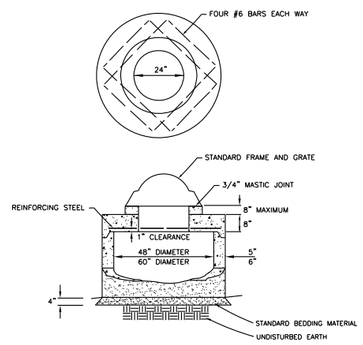

NOTES:
1. A 6" THICK SLAB TOP MAY BE ALLOWED FOR 48" DIAMETER RESTRICTED DEPTH CATCH BASINS NOT IN PAVEMENT.
2. NO STEPS ARE REQUIRED IN RESTRICTED DEPTH CATCH BASINS.

FLAT SLAB TOP FOR RESTRICTED DEPTH C.B.

EXHIBIT NO. 9

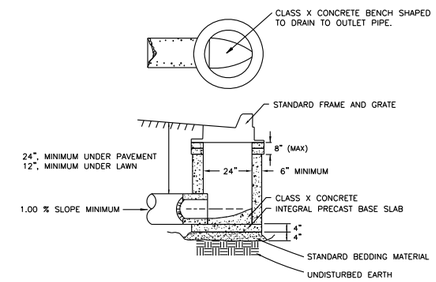

NOTES:
1. INLET BARREL SECTIONS SHALL CONFORM TO A.S.T.M. DESIGNATION C478.
2. MINIMUM PIPE SIZE FOR INLETS IN PUBLIC STREETS IS 10" DIAMETER.
3. DUCTILE IRON PIPE SHALL BE USED IN PAVED AREAS OF PUBLIC STREETS FOR INLET PROTECTION IF LESS THAN 3 FEET OF COVER IS PROVIDED.

INLET

EXHIBIT NO. 10

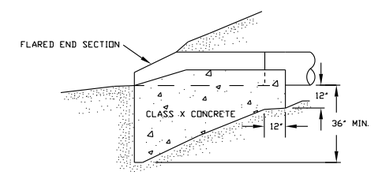

NOTES:
1. WIDTH OF THE FOUNDATION SHALL BE THE SAME AS THE WIDTH OF THE FLARED END SECTION. THE TOP OF FOUNDATION SHALL EXTEND HALF-WAY UP THE SIDE OF THE FLARED END SECTION.
2. THE BOTTOM OF THE FOUNDATION SHALL REST ON UNDISTURBED EARTH. THE BOTTOM OF THE FOUNDATION SHALL BE NO LESS THAN THREE (3') DEEP AT THE OPEN END OF THE FLARED END SECTION.
3. A FOUNDATION SIMILAR TO THIS FOUNDATION SHALL BE CONSTRUCTED UNDER ALL PRECAST HEADWALLS.

FOUNDATION FOR FLARED END SECTION

EXHIBIT NO. 11

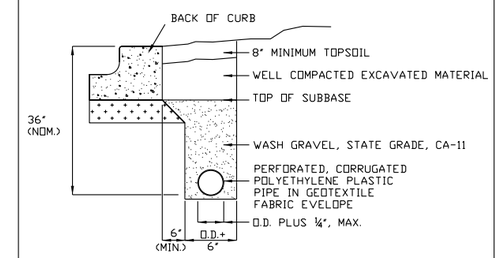

UNDERDRAIN

EXHIBIT NO. 12

STREET	PAVEMENT DESIGN
MAJOR	4" GRANULAR SUB-BASE 9" BITUMINOUS AGGREGATE MIXTURE 2" BITUMINOUS BINDER COURSE 2" BITUMINOUS SURFACE COURSE
COLLECTOR	3" GRANULAR SUB-BASE 6" BITUMINOUS AGGREGATE MIXTURE 2" BITUMINOUS BINDER COURSE 1 1/2" BITUMINOUS SURFACE COURSE
MINOR	3" AGGREGATE BASE COURSE 5" BITUMINOUS AGGREGATE MIXTURE 2" BITUMINOUS BINDER COURSE 1 1/2" BITUMINOUS SURFACE COURSE
CUL-DE-SAC	SAME AS MINOR
MARGINAL ACCESS	SAME AS MINOR
IN BUSINESS AND INDUSTRIAL DISTRICTS	3" GRANULAR SUB-BASE 8" BITUMINOUS AGGREGATE MIXTURE 3" BITUMINOUS CONCRETE

MINIMUM STANDARDS FOR STREET DESIGN

EXHIBIT NO. 14

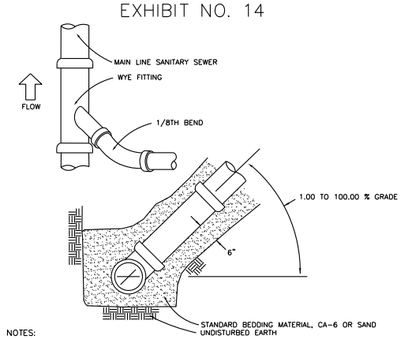

NOTES:
1. THIS EXHIBIT IS APPLICABLE TO FOUR (4) OR (6) INCH SANITARY SERVICE CONNECTIONS ONLY. LARGER DIAMETER SANITARY SEWER CONNECTIONS SHALL BE MADE AT MANHOLES ONLY.
2. THE BEDDING UNDER THE WYE FITTING AND STUB SHALL BE CAREFULLY COMPACTED TO PREVENT THE WYE FITTING FROM ROTATING.
3. THE SANITARY SERVICE CONNECTION PIPE SHALL BE LAID IN A STRAIGHT LINE AND AT A UNIFORM GRADIENT FROM THE TOP OF THE RISE FROM THE MAIN LINE TO THREE (3) FEET BEYOND THE RIGHT-OF-WAY LINE.
4. SECURELY PLUG THE END OF THE SERVICE CONNECTION.

SANITARY SERVICE CONNECTION

EXHIBIT NO. 15

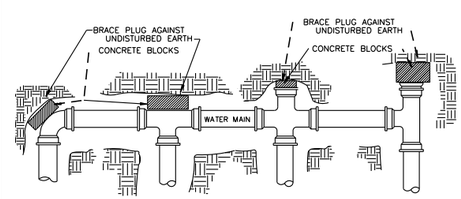

NOTES:
1. PROVIDE THRUST BLOCKING TO PREVENT MOVEMENT OF LINES UNDER PRESSURE AT ALL BENDS, TEES, CAPS, VALVES, HYDRANTS, AND AT POINTS SPECIFIED BY THE ENGINEER.
2. ALL BLOCKING SHALL BE MADE WITH CONCRETE BLOCKS AGAINST UNDISTURBED VERTICAL EARTH SURFACE.
3. ALTERNATE METHODS OF RESTRAINING WATER MAIN COMPONENTS SHALL REQUIRE THE APPROVAL OF THE VILLAGE ENGINEER.
4. NO WOOD IS ALLOWED IN THE THRUST BLOCKS.
5. MEGALUGS SERIES 1100 OR APPROVED EQUAL ARE REQUIRED AT ALL JOINTS.

THRUST BLOCK

EXHIBIT NO. 16

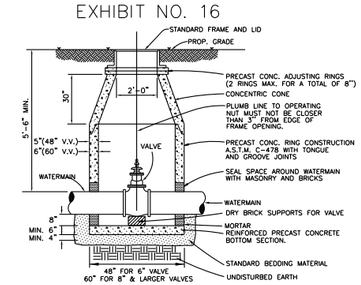

NOTES:
1. WATER MAIN 8 INCHES OR MORE IN DIAMETE SHALL REQUIRE A 60 INCH DIAMETER VALVE VAULT; WATER MAIN LESS THAN 8 INCHES IN DIAMETER SHALL REQUIRE A 48 INCH VALVE VAULT
2. INSTALL MINIMUM 4" OF SELECTED GRANULAR BACKFILL UNDER STRUCTURE BOTTOM SECTION AND FILL ENTIRE EXCAVATION ALL AROUND STRUCTURE UP TO C.L. OF PIPE WITH BEDDING MATERIAL.
3. PIPE OPENINGS SHALL BE CAST INTO WALL.
4. STRUCTURE FRAME, ADJUSTING RINGS, AND ALL CONCRETE SECTIONS SHALL BE SET ON AND SEALED WITH BITUMINOUS MASTIC JOINT MATERIAL.
5. FILL LUG HOLES WITH BITUMINOUS JOINING COMPOUND.
6. VALVE VAULT BARREL SECTIONS SHALL CONFORM TO A.S.T.M. 478 AS DESCRIBED IN THE STANDARD SPECIFICATIONS FOR SEWER AND WATER MAIN CONSTRUCTION IN ILLINOIS, 5TH EDITION MAY 1996.

VALVE VAULT

EXHIBIT NO. 17

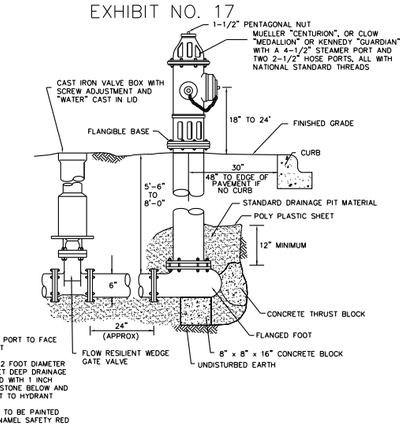

NOTES:
1. STEAMER PORT TO FACE PAVEMENT
2. PROVIDE 2 FOOT DIAMETER BY 2 FEET DEEP DRAINAGE PIT FILLED WITH 1 INCH WASHED STONE BELOW AND ADJACENT TO HYDRANT
3. HYDRANT TO BE PAINTED ALKYD ENAMEL SAFETY RED

FIRE HYDRANT

VILLAGE OF LAKE ZURICH DETAILS

VILLAGE OF LAKE ZURICH
70 EAST MAIN STREET
LAKE ZURICH, IL 60047
(847) 540-1694

REVISIONS

VILLAGE OF LAKE ZURICH DETAILS

SHEET 1

PROJECT NO. DETAILS
DATE 1/10/03
SCALE NTS
DESIGNED BY DESIGN
DRAWN BY DTM
CHECKED BY EL

SHEET 1 / 3

© COPYRIGHT 2003

VILLAGE OF LAKE ZURICH DETAILS

NOTE: DETAILS ARE NOT TO BE CHANGED IN ANY WAY. LEAVE ALL DETAILS ON SHEET EVEN IF THEY DO NOT APPLY TO CURRENT IMPROVEMENTS. CHANGING OF DETAILS DOES NOT CHANGE REQUIREMENTS.

EXHIBIT NO. 13

THESE STANDARDS SUPERCEDE ALL OTHER STANDARDS

LAKE ZURICH UTILITY MATERIAL STANDARDS

SANITARY SEWER	
Pipe	PVC, SDR – 26, meeting requirements of ASTM – 3034 Gasketed Joint / Cell Classification 12454 – B Depth over 15 feet – SDR 12 or 18 Service Laterals: PVC SCH 40 or better, SDR 35 or 26
Bedding Materials	1/4" to 3/4" crushed stone, size CA–7 to CA–11, 12" over the top of pipe
Manholes	Pre–Cast Concrete with Bench and Rubber Boots Cast Iron Frames and Lids: Neenah Type 1 self–sealing Marked "Sanitary Sewer" WrapidSeal Manhole Encapsulation System is required on all sanitary manholes Contractor shall be qualified by manufacturer's rep. to install WrapidSeal Exterior banding between barrel and cone sections is required Manhole must be water tight and sealed from the outside Fiberglass steps
Casing	The casing must be ductile iron or steel Manufactured pipe chocks must be used between the pipe and casing Pea gravel must be jetted through the casing, with concrete mortar on the ends Casing to be installed as required by the "Standard Specifications for Water and Sewer Construction in Illinois" 5th Edition, 1996, with all services considered as mains
Forcemain	If PVC pipe (C900) is used, #6 solid copper tracing wire is required for locating purposes
WATERMAIN	
Fire Hydrants	Clow Medallion, 5 1/4 " with Auxiliary Valve Kennedy Guardian, 5 1/4 " with Auxiliary Valve Mueller Centurion A – 423 with Auxiliary Valve 5 1/4 " three–way (2 hose nozzles and 1 pumper nozzle) Painted Safety Red
Pipe	Class 52 Ductile Iron, cement lined, Megalugs Series 1100 required at all fittings Wrapping the watermain with polyethylene film is not permitted
Bedding Materials	1/4" to 3/4" crushed stone, size CA–7 to CA–11, 12" over the top of pipe
Valves	Clow, American Flow Control Kennedy Resilient Wedge American Flow Control AFC series 500 NRS Resilient Wedge Valve UL/FM General Mueller Resilient Wedge Valve Non–Rising Stem, Mechanical Joint
Manholes	Cast Iron Frames and Lids: Neenah Type 1 self–sealing Marked "Water"
Casing	The casing must be ductile iron or steel Manufactured pipe chocks must be used between the pipe and casing Pea gravel must be jetted through the casing, with concrete mortar on the ends Casing to be installed as required by the "Standard Specifications for Water and Sewer Construction in Illinois" 5th Edition, 1996, with all services considered as mains
Corporation Stop	Mueller H – 15000 – 1" Size AY McDonald 4701
Roundway	Mueller H–15154 – 1" Stop, Minneapolis Pattern AY McDonald 6104
B–Box	Mueller H – 10300 Upper section inside diameter 1 1/4" Mueller H – 10302 Upper section inside diameter 1 1/2"
Service Line	1" Type K Copper, or as required by plumbing code
Tapping Saddle	Double Banded Stainless Steel Tapping Sleeve with 1" corporation stop
Hardware	All nuts and bolts below grade shall be stainless steel

WATERMAIN INSTALLATION SPECIFICATIONS

1. Watermains shall not be exposed for any reason without the approval of the Superintendent – Utilities.
2. Filling mains, pressure connections, pressure tests, tie–ins, and chlorinations require 48–hour notification to the Superintendent – Utilities.
3. Pressure connections and tie–ins to the Village systems will be scheduled and witnessed by the Utilities Division personnel.
4. Once mains are tied to the Village system, no valves or hydrants shall be operated by anyone other than Utility Division personnel.
5. Filling and flushing will be done by the Utilities Division only.
6. Water for pressure tests will be supplied by the Utilities Division, but it is the responsibility of the contractor to provide a backflow preventer or an approved anti–siphon method before the pump.
7. Corporation cocks and 1" copper lines for the chlorination and sampling shall be installed at locations determined by the Utilities Division.
8. Chlorination will not be performed on service lines until all first permanent water valves are installed.
9. Water vaults for 8" valves and larger must have an inside diameter of 60".

UTILITY MATERIAL STANDARDS

EXHIBIT NO. 18

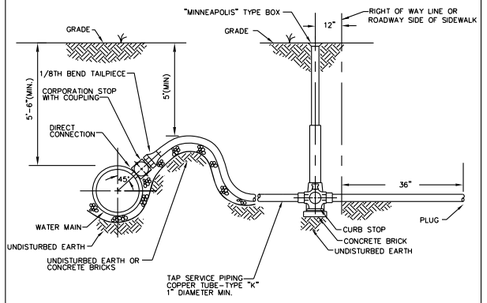

NOTES:
1. USE AN EXTRA TWO FEET OF COPPER WATER SERVICE CONNECTION BETWEEN THE CORPORATION STOP AND THE CURB STOP TO SERVE AS STRAIN RELIEF.
2. CURB BOX SHALL HAVE A PLUG TYPE LID.
3. SEE EXHIBIT NO. 13 FOR APPROVED FITTING DESCRIPTIONS.

WATER SERVICE CONNECTION

EXHIBIT NO. 19

STREET	RIGHT–OF WAY WIDTH	PAVEMENT WIDTH*	RADIUS OF HORIZ. CURVES	LENGTH OF VERT. CURVES	TANGENT BETWEEN HORIZ. REVERSE CURVES	MAXIMUM GRADIENT	MINIMUM GRADIENT	CLEAR SIGHT DISTANCE
MAJOR	100 FT.	54 FT.	500 FT.	200 (a) FT.	200 FT.	5%	0.5%	500 FT.
COLLECTOR	80 FT.	44 FT.	400 FT.	200 (a) FT.	200 FT.	5%	0.5%	400 FT.
MINOR	60 FT.	30 FT.	150 FT.	100 (b) FT.	–	6%	0.5%	200 FT.
CUL–DE–SAC	120 FT.	88 FT.	150 FT.	100 (b) FT.	–	6%	0.5%	200 FT.
MARGINAL ACCESS	60 FT.	30 FT.	400 FT.	200 (a) FT.	100 FT.	6%	0.5%	200 FT.
IN BUSINESS AND INDUSTRIAL DIST.	80–100 FT.	54 FT.	500 FT.	200 (a) FT.	200 FT.	2%	0.5%	500 FT.

*PAVEMENT WIDTHS ARE MEASURED BACK OF CURB TO BACK OF CURB AND INCLUDE ADDITIONAL WIDTH FOR ON–STREET PARKING.

(a) FIFTY (50) FEET FOR EACH ONE (1) PERCENT ALGEBRAIC DIFFERENCE OF GRADE BUT IN NO CASE LESS THAN TWO HUNDRED (200) FEET.
(b) FORTY (40) FEET FOR EACH ONE (1) PERCENT ALGEBRAIC DIFFERENCE OF GRADE BUT IN NO CASE LESS THAN ONE HUNDRED (100) FEET.

MINIMUM STANDARDS FOR STREET DESIGN

EXHIBIT NO. 24

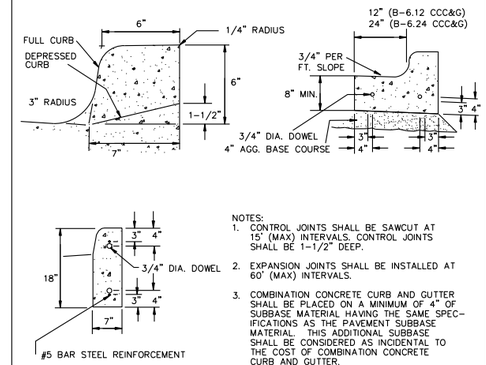

NOTES:
1. CONTROL JOINTS SHALL BE SAWCUT AT 15' (MAX) INTERVALS. CONTROL JOINTS SHALL BE 1–1/2" DEEP.
2. EXPANSION JOINTS SHALL BE INSTALLED AT 60' (MAX) INTERVALS.
3. COMBINATION CONCRETE CURB AND GUTTER SHALL BE PLACED ON A MINIMUM OF 4" OF SUBBASE MATERIAL HAVING THE SAME SPECIFICATIONS AS THE PAVEMENT SUBBASE MATERIAL. THIS ADDITIONAL SUBBASE SHALL BE CONSIDERED AS INCIDENTAL TO THE COST OF COMBINATION CONCRETE CURB AND GUTTER.
4. SUBBASE IS TO BE CA–6 OR GRADE 9.

BARRIER CURB

EXHIBIT NO. 25

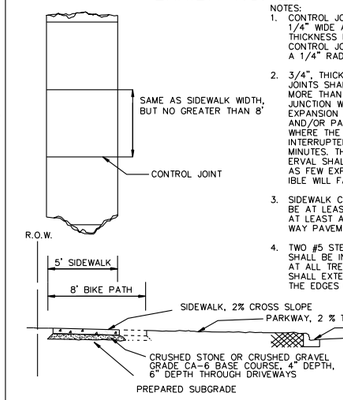

NOTES:
1. CONTROL JOINTS SHALL BE 1/8 TO 1/4" WIDE AND 1/4 OF THE SIDEWALK THICKNESS DEEP. THE EDGES OF THE CONTROL JOINTS SHALL BE GIVEN A 1/4" RADIUS.
2. 3/4". THICK TRANSVERSE EXPANSION JOINTS SHALL BE REQUIRED AT NO MORE THAN 50' INTERVALS, AT THE JUNCTION WITH BACK OF CURB, AT EXPANSION JOINTS IN ABUTTING CURB AND/OR PAVEMENT, AND AT PLACES WHERE THE FLOW OF CONCRETE IS INTERRUPTED FOR MORE THAN 30 MINUTES. THE EXPANSION JOINT INTERVAL SHALL BE ADJUSTED SO THAT AS FEW EXPANSION JOINTS AS POSSIBLE WILL FALL IN DRIVEWAY CROSSINGS.
3. SIDEWALK CROSSING DRIVEWAYS SHALL BE AT LEAST 6" THICK AND SHALL BE AT LEAST AS STRONG AS THE DRIVEWAY PAVEMENT ITSELF.
4. TWO #5 STEEL REINFORCING BARS SHALL BE INSTALLED IN THE SIDEWALK AT ALL TRENCH CROSSINGS. THEY SHALL EXTEND AT LEAST 10' BEYOND THE EDGES OF THE TRENCH.

SIDEWALK

EXHIBIT NO. 26

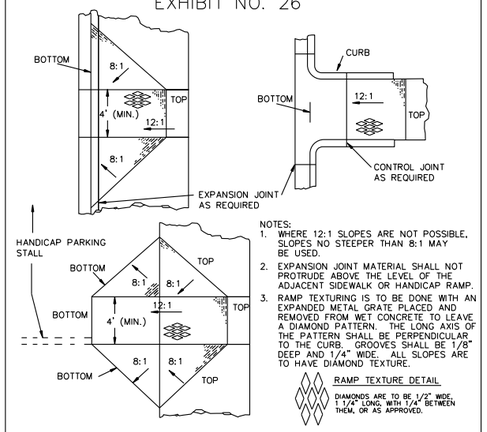

NOTES:
1. WHERE 12:1 SLOPES ARE NOT POSSIBLE, SLOPES NO STEEPER THAN 8:1 MAY BE USED.
2. EXPANSION JOINT MATERIAL SHALL NOT PROTRUDE ABOVE THE LEVEL OF THE ADJACENT SIDEWALK OR HANDICAP RAMP.
3. RAMP TEXTURING IS TO BE DONE WITH AN EXPANDED METAL GRATE PLACED AND REMOVED FROM WET CONCRETE TO LEAVE A DIAMOND PATTERN. THE LONG AXIS OF THE PATTERN SHALL BE PERPENDICULAR TO THE CURB. GROOVES SHALL BE 1/8" DEEP AND 1/4" WIDE. ALL SLOPES ARE TO HAVE DIAMOND TEXTURE.

RAMP TEXTURE DETAIL

DIAMONDS ARE TO BE 1/2" WIDE, 1 1/4" LONG, WITH 1/4" BETWEEN THEM, OR AS APPROVED.

HANDICAP RAMP

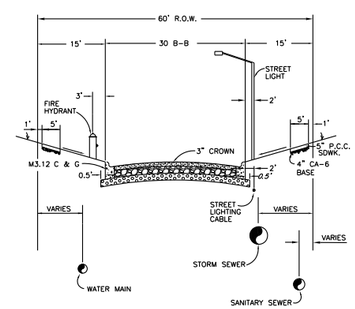

3" AGGREGATE BASE COURSE
5" BITUMINOUS AGGREGATE MIXTURE
2" BITUMINOUS BINDER COURSE
1 1/2" BITUMINOUS SURFACE COURSE

SEE EXHIBIT 12 AND EXHIBIT 19 FOR OTHER STREET DIMENSIONS

TYPICAL MINOR STREET DESIGN DETAIL

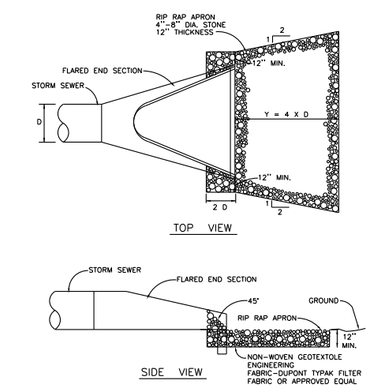

NOTE: D = PIPE I.D.
SEE EXHIBIT NO. 10 FOR FLARED END SECTION FOUNDATION

FLARED END SECTION RIP RAP

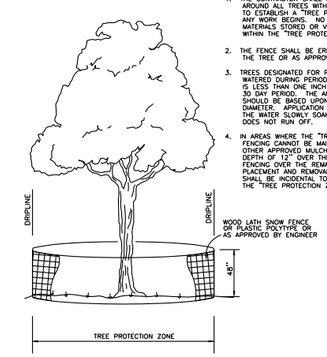

1. THE CONTRACTOR SHALL ERECT A TEMPORARY FENCE AROUND ALL TREES WITHIN THE CONSTRUCTED AREA TO ESTABLISH A TREE PROTECTION ZONE" BEFORE ANY WORK BEGINS. NO WORK IS TO BE PERFORMED, MATERIALS STORED OR VEHICLES DRIVEN OR PARKED WITHIN THE "TREE PROTECTION ZONE".
2. THE FENCE SHALL BE ERECTED AT THE DRIP–LINE OF THE TREE OR AS APPROVED BY ENGINEER.
3. TREES DESIGNATED FOR PROTECTION SHOULD BE WATERED DURING PERIODS OF DROUGHT WHEN THERE IS LESS THAN ONE INCH OF RAIN FALL DURING ANY 30 DAY PERIOD. THE AMOUNT OF WATER PER TREE SHOULD BE BASED UPON 50 GALLONS PER INCH DIAMETER. APPLICATION SHOULD BE MADE SO THAT THE WATER SLOWLY SOAKS INTO THE GROUND AND DOES NOT RUN OFF.
4. IN AREAS WHERE THE "TREE PROTECTION ZONE" FENCING CANNOT BE MAINTAINED WOOD CHIPS OR OTHER APPROVED MULCH MUST BE APPLIED TO A DEPTH OF 12" OVER THE AREA NOT PROTECTED BY FENCING OVER THE REMAINDER OF THE ZONE. PLACEMENT AND REMOVAL OF THE MULCHED AREA SHALL BE INCIDENTAL TO THE ESTABLISHMENT OF THE "TREE PROTECTION ZONE".

TREE PROTECTION FENCE

NOTES:
1. PROVIDE MINIMUM 4" OF PIPE BEDDING MATERIAL UNDER MANHOLE BOTTOM SECTION & FILL ENTIRE EXCAVATION ALL AROUND MANHOLE UP TO C.L. OF SEWER WITH BEDDING MATERIAL.
2. PIPE OPENINGS CAST INTO WALL.
3. PIPE SECTION TO BE LAIN THRU MANHOLE FORM CHANNEL & TOP HALF CUT.
4. MANHOLE FRAME, ADJ. RINGS & JOINTS SHALL BE SET ON A PREFORMED BIT. PLASTIC GASKET AS PER "SPECIAL CONDITIONS".
5. OUTLET CONTROL STRUCTURE TO BE CONSTRUCTED PER MANHOLE DETAIL

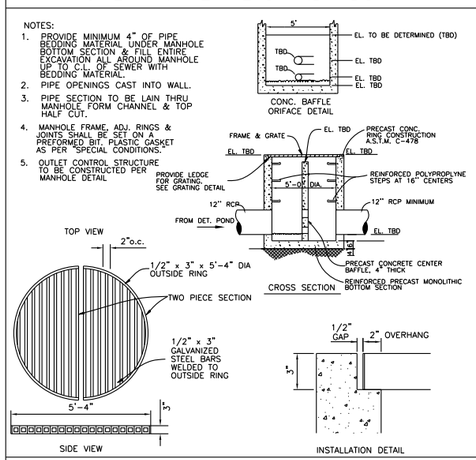

OUTLET CONTROL STRUCTURE

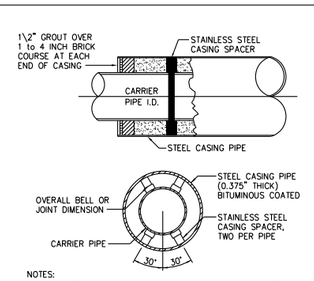

NOTES:
1. THE WATER MAIN SHALL BE 'CENTER SPACED' AND RESTRAINED ON TOP AND BOTTOM UTILIZING TWO CASING SPACERS EQUALLY SPACED PER LENGTH OF PIPE.
2. THE SANITARY SEWER MAIN SHALL BE CLASS 52 DUCTILE IRON PIPE, 'CENTER SPACED' AND RESTAINED ON TOP AND BOTTOM UTILIZING TWO CASING SPACERS EQUALLY SPACED PER LENGTH OF PIPE.
3. CASING SPACERS ARE TO BE POWERSEAL MODEL 48–10 STAINLESS STEEL OR APPROVED EQUAL.
4. CASING IS TO BE SEALED AT BOTH ENDS WITH A MASONARY CAP AND MADE WATER–TIGHT.
5. WATER MAIN JOINTS WITHIN THE CASING SHALL BE RESTRAINED UTILIZING U.S. PIPE FIELD LOCK GASKETS OR APPROVED EQUAL.

PIPE CASING DETAIL

INTENTIONALLY DELETED

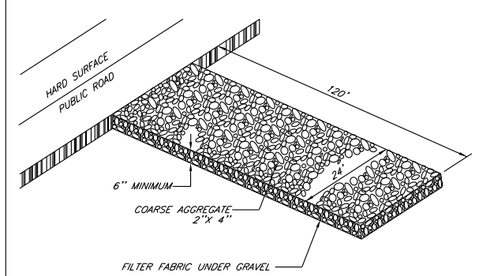

GRAVEL CONSTRUCTION ENTRANCE

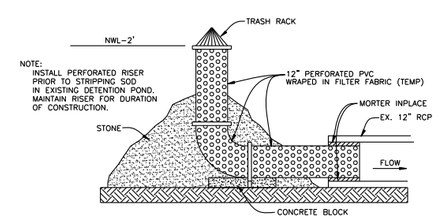

TEMPORARY PERFORATED RISER DETAIL

VILLAGE OF LAKE ZURICH DETAILS

VILLAGE OF LAKE ZURICH
70 EAST MAIN STREET
LAKE ZURICH, IL 60047
(847) 540–1694

REVISIONS

VILLAGE OF LAKE ZURICH DETAILS

SHEET 2

PROJECT NO.	DETAILS
DATE	1/10/03
SCALE	NTS
DESIGNED BY	DESIGN
DRAWN BY	DTM
CHECKED BY	EL

SHEET 2 / 3

© COPYRIGHT 2003

VILLAGE OF LAKE ZURICH DETAILS