Illinois Department of Transportation

Local Public Agency Formal Contract Proposal

PROPOSAL SUBMITTED BY		
Contractor's Name		
Street		P.O. Box
City	State	Zip Code

STATE OF ILLINOIS

COUNTY OF LAKE

(Name of City, Village, Town or Road District)

FOR THE IMPROVEMENT OF

STREET NAME OR ROUTE NO. Buffalo Grove Road

SECTION NO. 16-00249-04-RS

TYPES OF FUNDS **MFT**

☒ SPECIFICATIONS (required) ☒ PLANS (required)

For Municipal Projects

Submitted/Approved/Passed

Not Applicable

☐ Mayor ☐ President of Board of Trustees ☐ Municipal Official

Date

For County and Road District Projects

Submitted/Approved

Not Applicable

Highway Commissioner

Date

Submitted/Approved

Paula J. Trigg

County Engineer/~~Superintendent of Highways~~

April 21, 2016

Date

Department of Transportation

☒ Released for bid based on limited review

Paula J. Trigg

Regional Engineer

County Engineer on behalf of IDOT pursuant to Agreement of Understanding dated January 18, 2013

April 21, 2016

Date

Note: All proposal documents, including Proposal Guaranty Checks or Proposal Bid Bonds, should be stapled together to prevent loss when bids are processed.

NOTICE TO BIDDERS

County LAKE
Local Public Agency LCDOT
Section Number 16-00249-04-RS
Route CH 16

Sealed proposals for the improvement described below will be received at the office of The County Engineer of Lake County, 600 West Winchester Road, Libertyville, IL 60048 (Address) until 10:00 A.M. (Time) on May 17, 2016 (Date)

Sealed proposals will be opened and read publicly at the office of The County Engineer of Lake County 600 West Winchester Road, Libertyville, IL 60048 (Address) at 10:00 A.M. (Time) on May 17, 2016 (Date)

DESCRIPTION OF WORK

Name Buffalo Grove Road Patching Length: _____ feet (0.00 miles)

Location Buffalo Grove Rd from Deerfield Pkwy to Main St in the Village of Buffalo Grove, Lake County Illinois

Proposed Improvement Partial depth & full depth patching of concrete pavement with HMA; resurfacing & replacing HMA turn lane pavement; and replacing HMA shoulders. Traffic Control and Protection is required.

1. Plans and proposal forms will be available online at http://www.lakecountyil.gov/648/Bids---Roadwork or at the office of the Lake County Division of Transportation, 600 West Winchester Road, Libertyville, IL 60048 (Address)

2. ☒ Prequalification
   If checked, each bidder shall include a completed "Affidavit of Availability" (Form BC 57), in their proposal, showing all uncompleted contracts awarded to them and all low bids pending award for Federal, State, County, Municipal and private work.

3. The Awarding Authority reserves the right to waive technicalities and to reject any or all proposals as provided in BLRS Special Provision for Bidding Requirements and Conditions for Contract Proposals.

4. The following Forms shall be returned by the bidder to the Awarding Authority (not required if crossed out):
   a. BLR 12200: Local Public Agency Formal Contract Proposal (includes BLR 12200a Schedule of Prices)
   b. BC 57: Affidavit of Availability
   c. BC 261: Substance Abuse Prevention Program Certification
   d. BLR 12230: Proposal Bid Bond
   e. BLR 12325: Apprenticeship or Training Program Certification
   f. BLR 12326: Affidavit of Illinois Business Office
   g. LCDOT – CBID Printout

5. The quantities appearing in the bid schedule are approximate and are prepared for the comparison of bids. Payment to the Contractor will be made only for the actual quantities of work performed and accepted or materials furnished according to the contract. The scheduled quantities of work to be done and materials to be furnished may be increased, decreased or omitted as hereinafter provided.

6. Submission of a bid shall be conclusive assurance and warranty the bidder has examined the plans and understands all requirements for the performance of work. The bidder will be responsible for all errors in the proposal resulting from failure or neglect to conduct an in depth examination. The Awarding Authority will, in no case be responsible for any costs, expenses, losses or changes in anticipated profits resulting from such failure or neglect of the bidder.

7. The bidder shall take no advantage of any error or omission in the proposal and advertised contract.

8. If a special envelope is supplied by the Awarding Authority, each proposal should be submitted in that envelope furnished by the Awarding Agency and the blank spaces on the envelope shall be filled in correctly to clearly indicate its contents. When an envelope other than the special one furnished by the Awarding Authority is used, it shall be marked to clearly indicate its contents. When sent by mail, the sealed proposal shall be addressed to the Awarding Authority at the address and in care of the official in whose office the bids are to be received. All proposals shall be filed prior to the time and at the place specified in the Notice to Bidders. Proposals received after the time specified will be returned to the bidder unopened.

9. Permission will be given to a bidder to withdraw a proposal if the bidder makes the request in writing or in person before the time for opening proposals.

PROPOSAL

County LAKE
Local Public Agency LCDOT
Section Number 16-00249-04-RS
Route CH 16

1. Proposal of _____

for the improvement of the above section by the construction of Partial depth (2") and full depth (10") patching of concrete pavement with Hot-Mix Asphalt; milling and resurfacing existing HMA turn lanes; removing and replacing existing HMA turn lanes and HMA shoulders and associated work. Traffic Control and Protection is required.

a total distance of _____ feet, of which a distance of _____ feet, (0.00 miles) are to be improved.

2. The plans for the proposed work are those prepared by Lake County Division of Transportation and approved by the Department of Transportation* on _____

**** County Engineer on behalf of IDOT pursuant to Agreement of Understanding dated January 18, 2013.***

3. The specifications referred to herein are those prepared by the Department of Transportation and designated as "Standard Specifications for Road and Bridge Construction" and the "Supplemental Specifications and Recurring Special Provisions" thereto, adopted and in effect on the date of invitation for bids.

4. The undersigned agrees to accept, as part of the contract, the applicable Special Provisions indicated on the "Check Sheet for Recurring Special Provisions" contained in this proposal.

5. The undersigned agrees to complete the work within XXXXXXXX working days or by September 30, 2016 unless additional time is granted in accordance with the specifications.

6. A proposal guaranty in the proper amount, as specified in BLRS Special Provision for Bidding Requirements and Conditions for Contract Proposals, will be required. Bid Bonds will be allowed as a proposal guaranty. Accompanying this proposal is either a bid bond if allowed, on Department form BLR 12230 or a proposal guaranty check, complying with the specifications, made payable to:

_____ Treasurer of LAKE COUNTY

The amount of the check is the same as the amount of the BID BOND (_____).

7. In the event that one proposal guaranty check is intended to cover two or more proposals, the amount must be equal to the sum of the proposal guaranties, which would be required for each individual proposal. If the proposal guaranty check is placed in another proposal, it will be found in the proposal for: Section Number_____.

8. The successful bidder at the time of execution of the contract will be required to deposit a contract bond for the full amount of the award. When a contract bond is not required, the proposal guaranty check will be held in lieu thereof. If this proposal is accepted and the undersigned fails to execute a contract and contract bond as required, it is hereby agreed that the Bid Bond or check shall be forfeited to the Awarding Authority.

9. Each pay item should have a unit price and a total price. If no total price is shown or if there is a discrepancy between the product of the unit price multiplied by the quantity, the unit price shall govern. If a unit price is omitted, the total price will be divided by the quantity in order to establish a unit price.

10. A bid will be declared unacceptable if neither a unit price nor a total price is shown.

11. The undersigned submits herewith the schedule of prices on ~~BLR 12200a~~ the LCDOT CBID printout covering the work to be performed under this contract.

12. The undersigned further agrees that if awarded the contract for the sections contained in the combinations on ~~BLR 12200a~~ the LCDOT CBID printout, the work shall be in accordance with the requirements of each individual proposal for the multiple bid specified in the Schedule for Multiple Bids below.

Illinois Department of Transportation

SCHEDULE OF PRICES

County LAKE
Local Public Agency LCDOT
Section 16-00249-04-RS
Route CH 16

Schedule for Multiple Bids

Combination Letter	Sections Included in Combinations	Total

Schedule for Single Bid

(For complete information covering these items, see plans and specifications)

Bidder's Proposal for making Entire Improvements	

Item No.	Items	Unit	Quantity	Unit Price	Total

CONTRACTOR CERTIFICATIONS

County LAKE
Local Public Agency LCDOT
Section Number 16-00249-04-RS
Route CH 16

The certifications hereinafter made by the bidder are each a material representation of fact upon which reliance is placed should the Department enter into the contract with the bidder.

1. **Debt Deliquency.** The bidder or contractor or subcontractor, respectively, certifies that it is not delinquent in the payment of any tax administered by the Department of Revenue unless the individual or other entity is contesting, in accordance with the procedures established by the appropriate revenue Act, its liability for the tax or the amount of tax. Making a false statement voids the contract and allows the Department to recover all amounts paid to the individual or entity under the contract in a civil action.

2. **Bid-Rigging or Bid Rotating.** The bidder or contractor or subcontractor, respectively, certifies that it is not barred from contracting with the Department by reason of a violation of either 720 ILCS 5/33E-3 or 720 ILCS 5/33E-4.

   A violation of Section 33E-3 would be represented by a conviction of the crime of bid-rigging which, in addition to Class 3 felony sentencing, provides that any person convicted of this offense or any similar offense of any state or the United States which contains the same elements as this offense shall be barred for 5 years from the date of conviction from contracting with any unit of State or local government. No corporation shall be barred from contracting with any unit of State or local government as a result of a conviction under this Section of any employee or agent of such corporation if the employee so convicted is no longer employed by the corporation and: (1) it has been finally adjudicated not guilty or (2) if it demonstrates to the governmental entity with which it seeks to contract and that entity finds that the commission of the offense was neither authorized, requested, commanded, nor performed by a director, officer or a high managerial agent in behalf of the corporation.

   A violation of Section 33E-4 would be represented by a conviction of the crime of bid-rotating which, in addition to Class 2 felony sentencing, provides that any person convicted of this offense or any similar offense of any state or the United States which contains the same elements as this offense shall be permanently barred from contracting with any unit of State or local government. No corporation shall be barred from contracting with any unit of State or local government as a result of a conviction under this Section of any employee or agent of such corporation if the employee so convicted is no longer employed by the corporation and: (1) it has been finally adjudicated not guilty or (2) if it demonstrates to the governmental entity with which it seeks to contract and that entity finds that the commission of the offense was neither authorized, requested, commanded, nor performed by a director, officer or a high managerial agent in behalf of the corporation.

3. **Bribery.** The bidder or contractor or subcontractor, respectively, certifies that it has not been convicted of bribery or attempting to bribe an officer or employee of the State of Illinois or any unit of local government, nor has the firm made an admission of guilt of such conduct which is a matter of record, nor has an official, agent, or employee of the firm committed bribery or attempted bribery on behalf of the firm and pursuant to the direction or authorization of a responsible official of the firm.

4. **Interim Suspension or Suspension.** The bidder or contractor or subcontractor, respectively, certifies that it is not currently under a suspension as defined in Subpart I of Title 44 Subtitle A Chapter III Part 6 of the Illinois Administrative Code. Furthermore, if suspended prior to completion of this work, the contract or contracts executed for the completion of this work may be cancelled.

County LAKE
Local Public Agency LCDOT
Section Number 16-00249-04-RS
Route CH 16

SIGNATURES

(If an individual)

Signature of Bidder _____

Business Address _____

(If a partnership)

Firm Name _____

Signed By _____

Business Address _____

Inset Names and Addressed of All Partners _____

(If a corporation)

Corporate Name _____

Signed By _____
President

Business Address _____

Insert Names of Officers
President _____
Secretary _____
Treasurer _____

Attest: _____
Secretary

Illinois Department of Transportation

Bureau of Construction
2300 South Dirksen Parkway/Room 322
Springfield, Illinois 62764

Affidavit of Availability

For the Letting of May 17, 2016

Instructions: Complete this form by either typing or using black ink. "Authorization to Bid" will not be issued unless both sides of this form are completed in detail. Use additional forms as needed to list all work.

Part I. Work Under Contract

List below all work you have under contract as either a prime contractor or a subcontractor. It is required to include all pending low bids not yet awarded or rejected. In a joint venture, list only that portion of the work which is the responsibility of your company. The uncompleted dollar value is to be based upon the most recent engineer's or owners estimate, and must include work subcontracted to others. If no work is contracted, show **NONE.**

	1	2	3	4	Awards Pending	
Contract Number						
Contract With						
Estimated Completion Date						
Total Contract Price						Accumulated Totals
Uncompleted Dollar Value if Firm is the Prime Contractor						
Uncompleted Dollar Value if Firm is the Subcontractor						
				Total Value of All Work		

Part II. Awards Pending and Uncompleted Work to be done with your own forces.

List below the uncompleted dollar value of work for each contract and awards pending to be completed with your own forces. All work subcontracted to others will be listed on the reverse of this form. In a joint venture, list only that portion of the work to be done by your company. If no work is contracted, show NONE.

						Accumulated Totals
Earthwork						
Portland Cement Concrete Paving						
HMA Plant Mix						
HMA Paving						
Clean & Seal Cracks/Joints						
Aggregate Bases & Surfaces						
Highway, R.R. and Waterway Structures						
Drainage						
Electrical						
Cover and Seal Coats						
Concrete Construction						
Landscaping						
Fencing						
Guardrail						
Painting						
Signing						
Cold Milling, Planning & Rotomilling						
Demolition						
Pavement Markings (Paint)						
Other Construction (List)						
Totals						

Disclosure of this information is **REQUIRED** to accomplish the statutory purpose as outlined in the “Illinois Procurement Code." Failure to comply will result in non-issuance of an "Authorization To Bid." This form has been approved by the State Forms Management Center.

Part III. Work Subcontracted to Others.

For each contract described in Part I, list all the work you have subcontracted to others.

	1	2	3	4	Awards Pending
Subcontractor					
Type of Work					
Subcontract Price					
Amount Uncompleted					
Subcontractor					
Type of Work					
Subcontract Price					
Amount Uncompleted					
Subcontractor					
Type of Work					
Subcontract Price					
Amount Uncompleted					
Subcontractor					
Type of Work					
Subcontract Price					
Amount Uncompleted					
Subcontractor					
Type of Work					
Subcontract Price					
Amount Uncompleted					
Total Uncompleted					

I, being duly sworn, do hereby declare that this affidavit is a true and correct statement relating to ALL uncompleted contracts of the undersigned for Federal, State, County, City and private work, including ALL subcontract work, ALL pending low bids not yet awarded or rejected and ALL estimated completion dates.

Subscribed and sworn to before me

this _____ day of _____ , _____ Type or Print Name _____

Officer or Director Title

_____ Signed _____

Notary Public

My commission expires _____

Company _____

(Notary Seal)

Address _____

_____

Illinois Department of Transportation

Substance Abuse Prevention Program Certification

Letting Date: May 17, 2016 Item No.: _____

Contract No.: _____

Route: CH 16

Section: 16-00249-04-RS

Job No.: _____

County: LAKE

The Substance Abuse Prevention on Public Works Act, Public Act 95-0635, prohibits the use of drugs and alcohol, as defined in the Act, by employees of the Contractor and by employees of all approved Subcontractors while performing work on a public works project. The Contractor/Subcontractor herewith certifies that it has a superseding collective bargaining agreement or makes the public filing of its written substance abuse prevention program for the prevention of substance abuse among its employees who are not covered by a collective bargaining agreement dealing with the subject as mandated by the Act.

A. The undersigned representative of the Contractor/Subcontractor certifies that the contracting entity has signed collective bargaining agreements that are in effect for all of its employees, and that deal with the subject matter of Public Act 95-0635.

_____
Contractor/Subcontractor

_____
Name of Authorized Representative (type or print)

_____
Title of Authorized Representative (type or print)

_____ _____
Signature of Authorized Representative Date

B. The undersigned representative of the Contractor/Subcontractor certifies that the contracting entity has in place for all of its employees not covered by a collective bargaining agreement that deals with the subject of the Act, the attached substance abuse prevention program that meets or exceeds the requirements of Public Act 95-0635.

_____
Contractor/Subcontractor

_____
Name of Authorized Representative (type or print)

_____
Title of Authorized Representative (type or print)

_____ _____
Signature of Authorized Representative Date

Illinois Department of Transportation

Local Agency Proposal Bid Bond

Route CH 16
County LAKE
Local Agency LCDOT
Section 16-00249-04-RS

RETURN WITH BID

PAPER BID BOND

WE _____ as PRINCIPAL,

and _____ as SURETY,

are held jointly, severally and firmly bound unto the above Local Agency (hereafter referred to as "LA") in the penal sum of 5% of the total bid price, or for the amount specified in the proposal documents in effect on the date of invitation for bids whichever is the lesser sum. We bind ourselves, our heirs, executors, administrators, successors, and assigns, jointly pay to the LA this sum under the conditions of this instrument.

WHEREAS THE CONDITION OF THE FOREGOING OBLIGATION IS SUCH that, the said PRINCIPAL is submitting a written proposal to the LA acting through its awarding authority for the construction of the work designated as the above section.

THEREFORE if the proposal is accepted and a contract awarded to the PRINCIPAL by the LA for the above designated section and the PRINCIPAL shall within fifteen (15) days after award enter into a formal contract, furnish surety guaranteeing the faithful performance of the work, and furnish evidence of the required insurance coverage, all as provided in the "Standard Specifications for Road and Bridge Construction" and applicable Supplemental Specifications, then this obligation shall become void; otherwise it shall remain in full force and effect.

IN THE EVENT the LA determines the PRINCIPAL has failed to enter into a formal contract in compliance with any requirements set forth in the preceding paragraph, then the LA acting through its awarding authority shall immediately be entitled to recover the full penal sum set out above, together with all court costs, all attorney fees, and any other expense of recovery.

IN TESTIMONY WHEREOF, the said PRINCIPAL and the said SURETY have caused this instrument to be signed by their respective officers this _____ day of _____

Principal

_____ (Company Name) _____ (Company Name)

By: _____ (Signature and Title) By: _____ (Signature and Title)

(If PRINCIPLE is a joint venture of two or more contractors, the company names, and authorized signatures of each contractor must be affixed.)

Surety

_____ (Name of Surety) By: _____ (Signature of Attorney-in-Fact)

STATE OF ILLINOIS,

COUNTY OF _____

I. _____, a Notary Public in and for said county,

do hereby certify that _____

(Insert names of individuals signing on behalf of PRINCIPAL & SURETY)

who are each personally known to me to be the same persons whose names are subscribed to the foregoing instrument on behalf of PRINCIPAL and SURETY, appeared before me this day in person and acknowledged respectively, that they signed and delivered said instruments as their free and voluntary act for the uses and purposes therein set forth.

Given under my hand and notarial seal this _____ day of _____

My commission expires _____ _____ (Notary Public)

ELECTRONIC BID BOND

☐ **Electronic bid bond is allowed (box must be checked by LA if electronic bid bond is allowed)**

The Principal may submit an electronic bid bond, in lieu of completing the above section of the Proposal Bid Bond Form. By providing an electronic bid bond ID code and signing below, the Principal is ensuring the identified electronic bid bond has been executed and the Principal and Surety are firmly bound unto the LA under the conditions of the bid bond as shown above. (If PRINCIPAL is a joint venture of two or more contractors, an electronic bid bond ID code, company/Bidder name title and date must be affixed for each contractor in the venture.)

Electronic Bid Bond ID Code

_____ (Company/Bidder Name)

_____ (Signature and Title) _____ Date

Illinois Department of Transportation

Apprenticeship or Training Program Certification

Return with Bid

Route	CH 16
County	LAKE
Local Agency	LCDOT
Section	16-00249-04-RS

All contractors are required to complete the following certification:

☒ For this contract proposal or for all groups in this deliver and install proposal.

☐ For the following deliver and install groups in this material proposal:

Illinois Department of Transportation policy, adopted in accordance with the provisions of the Illinois Highway Code, requires this contract to be awarded to the lowest responsive and responsible bidder. The award decision is subject to approval by the Department. In addition to all other responsibility factors, this contract or deliver and install proposal requires all bidders and all bidders' subcontractors to disclose participation in apprenticeship or training programs that are (1) approved by and registered with the United States Department of Labor's Bureau of Apprenticeship and Training, and (2) applicable to the work of the above indicated proposals or groups. Therefore, all bidders are required to complete the following certification:

I. Except as provided in paragraph IV below, the undersigned bidder certifies that it is a participant, either as an individual or as part of a group program, in an approved apprenticeship or training program applicable to each type of work or craft that the bidder will perform with its own employees.

II. The undersigned bidder further certifies for work to be performed by subcontract that each of its subcontractors submitted for approval either (A) is, at the time of such bid, participating in an approved, applicable apprenticeship or training program; or (B) will, prior to commencement of performance of work pursuant to this contract, establish participation in an approved apprenticeship or training program applicable to the work of the subcontract.

III. The undersigned bidder, by inclusion in the list in the space below, certifies the official name of each program sponsor holding the Certificate of Registration for all of the types of work or crafts in which the bidder is a participant and that will be performed with the bidder's employees. Types of work or craft that will be subcontracted shall be included and listed as subcontract work. The list shall also indicate any type of work or craft job category for which there is no applicable apprenticeship or training program available.

IV. Except for any work identified above, any bidder or subcontractor that shall perform all or part of the work of the contract or deliver and install proposal solely by individual owners, partners or members and not by employees to whom the payment of prevailing rates of wages would be required, check the following box, and identify the owner/operator workforce and positions of ownership. ☐

_____
_____
_____
_____
_____
_____

The requirements of this certification and disclosure are a material part of the contract, and the contractor shall require this certification provision to be included in all approved subcontracts. The bidder is responsible for making a complete report and shall make certain that each type of work or craft job category that will be utilized on the project is accounted for and listed. The Department at any time before or after award may require the production of a copy of each applicable Certificate of Registration issued by the United States Department of Labor evidencing such participation by the contractor and any or all of its subcontractors. In order to fulfill the participation requirement, it shall not be necessary that any applicable program sponsor be currently taking or that it will take applications for apprenticeship, training or employment during the performance of the work of this contract or deliver and install proposal.

Bidder: _____ By: _____
(Signature)

Address: _____ Title: _____

RETURN WITH BID

Illinois Department of Transportation

Affidavit of Illinois Business Office

County LAKE
Local Public Agency LCDOT
Section Number 16-00249-04-RS
Route CH 16

State of _____)
) ss.
County of _____)

I, _____ of _____ , _____ ,
(Name of Affiant) (City of Affiant) (State of Affiant

being first duly sworn upon oath, states as follows:

1. That I am the _____ of _____ .
officer or position bidder
2. That I have personal knowledge of the facts herein stated.
3. That, if selected under this proposal, _____ , will maintain a
(bidder)

business office in the State of Illinois which will be located in _____ County, Illinois.

4. That this business office will serve as the primary place of employment for any persons employed in the construction contemplated by this proposal.
5. That this Affidavit is given as a requirement of state law as provided in Section 30-22(8) of the Illinois Procurement Code.

_____
(Signature)

_____
(Print Name of Affiant)

This instrument was acknowledged before me on the day of _____ , _____ .

(SEAL)

_____
(Signature of Notary Public)

CONTRACTOR

PLEASE REPLACE WITH YOUR COMPLETED LCDOT CBID PRINTOUT

SPECIAL PROVISION

TABLE OF CONTENTS

LOCATION OF IMPROVEMENT 1

DESCRIPTION OF IMPROVEMENT 1

DIVISION 100. GENERAL REQUIREMENTS AND COVENANTS

SECTION 102 ADVERTISEMENT, BIDDING, AWARD AND CONTRACT EXECUTION 2

SHARED SERVICES 3

ARTICLE 105.03(c) ENVIRONMENTAL PERMITTING ANGENCIES 4

ARTICLE 105.09 SURVEY CONTROL POINTS 4

ARTICLE 106.03 SAMPLES, TESTS, AND CITED SPECIFICATIONS 5

PROTECTION OF EXISTING DRAINAGE FACILITIES DURING CONSTRUCTION 6

ARTICLE 107.09 PUBLIC CONVENIENCE AND SAFETY 7

ARTICLE 107.20 PROTECTION AND RESTORATION OF PROPERTY 8

ARTICLE 107.23 PROTECTION OF STREAMS, LAKES, RESERVOIRS, NATURAL AREAS, WETLANDS, PRAIRIE AREA, SAVANNAHS, AND ENDANGERED AND THREATENED SPECIES 9

ARTICLE 107.25 PROTECTION AND RESTORATION OF TRAFFIC SIGNS 10

ARTICLE 107.27 INSURANCE 11

ARTICLE 107.29 OPENING OF SECTION OF HIGHWAY TO TRAFFIC 12

SECTION 108 PROSECUTION AND PROGRESS 13

ARTICLE 108.06 LABOR, METHODS, AND EQUIPMENT 13

DIVISION 200. EARTHWORK, LANDSCAPING, AND EROSION CONTROL

DIVISION 200 PHOSPHORUS FERTILIZER NUTRIENT BAN 14

ARTICLE 202.03 REMOVAL AND DISPOSAL OF SURPLUS, UNSTABLE, AND UNSUITABLE MATERIALS AND ORGANIC WASTE 14

DIVISION 300. SUBGRADES, SUBBASES, AND BASE COURSES

35101400 AGGREGATE BASE COURSE, TYPE B 16

DIVISION 400. SURFACE COURSES, PAVEMENTS, REHABILITATION, AND SHOULDERS

ARTICLE 406.11 SURFACE TESTS **17**

440001XX HOT-MIX ASPHALT SURFACE REMOVAL
X4401198 HOT-MIX ASPHALT SURFACE REMOVAL VARIABLE DEPTH **17**

44201XXX CLASS D PATCHES **18**

IDOT SPECIAL PAY ITEMS FOR ROAD AND BRIDGE CONSTRUCTION

Z0038121 PORTLAND CEMENT CONCRETE SURFACE REMOVAL 2" **19**

LAKE COUNTY TRAFFIC CONTROL AND PROTECTION

TRAFFIC CONTROL PLAN **20**

TRAFFIC CONTROL AND PROTECTION (SPECIAL) **21**

EMPLOYMENT PRACTICES

STANDARD COUNTY INSERT **30**

LRS11 SPECIAL PROVISION FOR EMPLOYMENT PRACTICES **31**

PREVAILING WAGE RATES **33**

IDOT RECURRING SPECIAL PROVISIONS

INDEX OF CHECK SHEETS **39**

IDOT BDE SPECIAL PROVISIONS

BDE 80364 ERRATA FOR THE 2016 STANDARD SPECIFICATIONS **41**

IDOT DISTRICT ONE SPECIAL PROVISIONS

FRICTION AGGREGATE **45**

HMA MIXTURE DESIGN REQUIREMENTS **48**

RECLAIMED ASPHALT PAVEMENT AND RECLAIMED ASPHALT SHINGLES **64**

PROJECT LOCATION, QUANTITY SCHEDULES, and SUMMARY OF QUANTITIES

PROJECT LOCATION MAPS **75**

SCHEDULE OF QUANTITIES **77**

SUMMARY OF QUANTITIES **82**

HIGHWAY STANDARDS

IDOT HIGHWAY STANDARDS **83**

LCDOT HIGHWAY STANDARDS **91**

CONSTRUCTION DEBRIS

SPECIAL PROVISION FOR CONSTRUCTION DEBRIS **95**

CONSTRUCTION DEBRIS MANIFEST **96**

INTENTIONALLY

BLANK

STATE OF ILLINOIS
SPECIAL PROVISIONS

The following Special Provisions supplement the specifications listed in the table below, which apply to and govern the proposed improvement designated as Lake County Section **16-00249-04-RS**, and in case of conflict with any part or parts of said specifications, the said Special Provisions shall take precedence and govern.

SPECIFICATION	ADOPTED/DATED
Standard Specifications for Road and Bridge Construction	April 1, 2016
Manual on Uniform Traffic Control Devices for Streets and Highways Illinois Supplement	2009 Edition June 2014 Revision
Supplemental Specifications and Recurring Special Provisions (indicated on the Check Sheet included herein)	April 1, 2016
Standard Specifications for Water and Sewer Construction in Illinois	7th Edition, 2014

This Project Does Not Include a Separate Set of Plans.

LOCATION OF IMPROVEMENT

This project is located on Buffalo Grove Road from Deerfield Parkway north to Main Street in the Village of Buffalo Grove, Lake County, Illinois.

DESCRIPTION OF IMPROVEMENT

The pavement patching consists of partial depth hot-mix asphalt patching of concrete pavement, including 2” milling of the existing concrete pavement and resurfacing with 2” of hot-mix asphalt surface course. The work also includes full depth patching (10”) of the concrete pavement with hot-mix asphalt; milling and resurfacing existing HMA turn lanes; removing and replacing existing HMA turn lanes and HMA shoulders and other related work. Traffic Control and Protection is required for this project.

DIVISION 100. GENERAL REQUIREMENTS AND COVENANTS

SECTION 102 ADVERTISEMENT, BIDDING, AWARD AND CONTRACT EXECUTION (LCDOT)

Effective: January 1, 2007
Revised: March 20, 2015

Award and execution of contract shall be in accordance with Section 102 of the "Standard Specifications" and the following:

Insurance certificates *shall be received within* ***five (5) days*** *after the contract has been mailed to the bidder. Contract performance and payment* ***bond*** *shall be received within* ***ten (10) days*** *after the contract has been mailed to the bidder. The contract shall be executed by the successful bidder and returned within fifteen (15) days after the contract has been mailed to the bidder.*

CONTRACTORS and SUBCONTRACTORS holding a ***5 – HMA Paving IDOT prequalification*** *shall be limited to paving on contracts with 1200 total tons or less. The 1200 ton limit does not include HMA sidewalk, driveways, medians, paved shoulder behind curb, and/or patching.*

In order to limit bid proposal math errors, all bids for this project **shall** be submitted using the CBID spreadsheet. The Contractor shall include in their bid proposal a hardcopy CBID printout. Proposals submitted without a hardcopy CBID printout will be rejected as nonresponsive and returned to the Contractor unread. Proposals submitted with a handwritten schedule of items will be rejected as nonresponsive and returned to the Contractor unread. A maximum of five pay items may have legible pen and ink entries/revisions to the unit and extended prices on the CBID printout to accommodate last minute supplier and subcontractor quotes. A legible pen and ink entry/revision to the project total bid will also be allowed.

To decrease LCDOT bid processing time, for projects with 25 or more pay items the Contractor shall include in their sealed bid envelope a CD with a copy of the completed CBID. The hardcopy CBID printout will serve as the bid submission, while the CD is only provided to aid in tabulating the bids. In the event that there is a difference between the hardcopy CBID printout and the electronic copy provided on the CD, the hardcopy CBID printout shall take precedence and be used to complete the bid tabulation.

If the Contractor is bidding on more than one project for which the CD copy of the CBID is required, the Contractor may include all the CBIDs on a single CD. The CD shall be clearly labeled with the Contractor's name and the project CBIDs included. The single CD shall be submitted in the sealed bid envelope of one of the projects the Contractor is bidding on.

Shared Services: Under the authority of 30 ILCS 525, the Governmental Joint Purchasing Act the unit prices included in the proposal may be offered to other governmental units according to the following:

The purchase of goods and services pursuant to the terms of this Contract shall also be offered for purchases to be made by other governmental units, as authorized by the Governmental Joint Purchasing Act, 30 ILCS 525/0.01, et seq. (the "Act"). All purchases and payments made under the Act shall be made directly by and between each governmental unit and the successful bidder. The bidder agrees that Lake County shall not be responsible in any way for purchase orders or payments made by the other governmental units. The bidder further agrees that all terms and conditions of this Contract shall continue in full force and effect as to the other governmental units during extended terms. The credit or liability of each governmental unit shall remain separate and distinct. Disputes between bidders and governmental units shall be resolved between the immediate parties.

The bidder and the other governmental units may negotiate such other and further terms and conditions to this Contract ("Other Terms") as individual projects may require. To be effective, Other Terms shall be reduced to writing and signed by a duly authorized representative of both the successful bidder and the other governmental unit.

The bidder shall provide the other governmental units with all required documentation set forth in the solicitation including but not limited to: performance and payment bonds, Certificates of Insurance naming the respective governmental unit as an additional insured and certified payrolls to the other governmental unit as required.

ARTICLE 105.03(e) ENVIRONMENTAL PERMITTING AGENCIES

Effective: December 22, 2014
Revised: February 26, 2016

Add the following paragraph to Article 105.03 of the "Standard Specifications"

(e) Permitting Agency Deduction: Any monetary payment required from a permitting agency related to improper erosion and sediment control may be passed along to the Contractor as a deduction from future pay estimates. Monetary payments will include fees and violations attributable to the Contractor's actions or inaction resulting in improper erosion and sediment control. The deduction will be applied to monies due or that might become due to the Contractor. Permitting agencies include the Lake County Stormwater Management Commission, the Illinois Environmental Protection Agency, the Army Corps of Engineers, and other regulatory agencies.

ARTICLE 105.09 SURVEY CONTROL POINTS (LCDOT)

Effective: January 1, 2007
Revised: June 6, 2014

The Contractor shall furnish the Engineer with the materials required to establish survey control points according to Article 105.09 of the "Standard Specifications" and the following:

Paint: *The Contractor shall furnish, at their expense, white, pink or purple pavement marking paint in aerosol cans, for use by the Engineer. The quality of the marking paint shall be as manufactured by Aervoe-Pacific Co. (distributed by Municipal Marking Distributors, Inc., Dundee, IL) or approved equal.*

The Contractor and subcontractors shall only use white, pink or purple colors for their own markings. At no time will the Contractor use any of the J.U.L.I.E. utility colors listed in Article 107.31 of the "Standard Specifications".

Hubs: *The Contractor shall furnish, at their expense, hubs for use by the Engineer according to the following:*

1. *Shall be 1 ⅜" x ⅞" x 18" (actual dimension).*
2. *Shall be furnished in securely banded (on each end) bundles of 25 pieces.*
3. *The material shall be kiln dried Douglas fir, oak or maple and surfaced on the 2 larger sides and without splits, pitch pockets, wane, knots or decayed wood.*
4. *The tapered end on each hub shall be pencil point tapered.*

Lath: *The Contractor shall furnish, at their expense, lath for use by the Engineer according to the following:*

1. *Shall be 1 ⅛" x ½" x 48" (actual dimension).*
2. *Shall be furnished in securely banded (on each end) bundles of 50 pieces.*
3. *The material shall be kiln dried Douglas fir, oak or maple and surfaced on the 2 larger sides and without splits, pitch pockets, wane, knots or decayed wood.*
4. *The tapered end may be saw-cut tapered or pencil tapered.*

ARTICLE 106.03 SAMPLES, TESTS, AND CITED SPECIFICATIONS (LCDOT)

Effective: October 1, 2012
Revised: May 19, 2014

Hot-Mix Asphalt and Concrete Placements:

The Contractor shall notify the Engineer of proposed Hot-Mix Asphalt (HMA) and/or concrete placements according to the following:

1. By 2 p.m., the Contractor shall notify the Engineer, in person or by phone, of HMA and/or concrete placements proposed for the next working day. Upon receiving the Engineer's approval, the Contractor may schedule the HMA and/or concrete for placement. Requests for HMA and/or concrete placements called in after 2 p.m., cannot be placed for payment and should not be scheduled by the Contractor.

2. The Contractor's notification shall provide the following:
   a. A firm start time.
   b. The plant source of material.
   c. The pay items included.
   d. The project name and location - be specific on large projects.
   e. The estimated quantity of HMA and/or concrete to be used.
   f. The duration of the work.

3. In the event that the Engineer cannot be reached, the Contractor can meet the notification requirement by calling the LCDOT Materials Lab at (847) 377-7493 and leaving the notification message prior to 2 p.m. LCDOT will call the Contractor back and give approval for the next day's work. The Contractor must receive approval prior to scheduling the work for payment.

4. Cancellations due to weather or other good, unforeseen reasons need to be relayed to the Engineer and the LCDOT Materials Lab at (847) 377-7493, ASAP! Repeated cancellations without sufficient notice and/or for no good reason, in the opinion of the Engineer, will lead to a deduction for any incurred County Material Consultant costs from future pay estimates.

Concrete Test Cylinders:

The Contractor shall not transport concrete cylinders until a minimum of 8 hours have elapsed after the final set. Concrete cylinders shall be transported prior to 48 hours for standard curing. The cylinders will be transported within the above time frame, regardless of what day of the week the cylinders were cast.

A sufficient quantity of cylinders shall be cast to provide for an additional break beyond the specified break requirements. Until QC & QA (LCDOT) have confirmed that proper strength has been obtained for the specified break, QC will retain at least two additional 6” x 12” cylinders or three 4” x 8” cylinders for average strength. In the event the cylinder breaks fail to reach the required strength, according to Article 1020 of the “Standard Specifications”, the two additional 6” x 12” cylinders or three 4” x 8” cylinders will be broken at a later date determined by LCDOT.

PROTECTION OF EXISTING DRAINAGE FACILITIES DURING CONSTRUCTION (LCDOT)

Effective: May 19, 2014

All existing drainage structures shall be kept free of debris resulting from construction operations. All work and material necessary to prevent accumulation of debris in the drainage structures will be considered as included in the unit bid prices of the inlet protection, inlet filters and other temporary erosion control measures. Any debris in the drainage structures resulting from construction operations shall be removed at the Contractor's own expense, and no extra compensation will be allowed.

Should reconstruction or adjustment of a drainage structure be required by the Engineer in the field, the necessary work and payment shall be done according to Section 602 and Article 104.02 respectively of the “Standard Specifications”.

During construction, if the Contractor’s forces encounter or otherwise becomes aware of any sewers, underdrains or field drains within the right-of-way other than those shown on the plans, they shall inform the Engineer. The Engineer shall direct the work necessary to maintain or replace the facilities in service, and to protect them from damage during construction if maintained. Existing facilities to be maintained that are damaged because of non-compliance with this provision shall be replaced at the Contractor's own expense. Should the Engineer direct the replacement of a facility, the necessary work and payment shall be done in accordance with Section 550, Section 601 and Article 104.02 respectively of the “Standard Specifications”.

ARTICLE 107.09 PUBLIC CONVENIENCE AND SAFETY (LCDOT)

Effective: January 1, 2007
Revised: March 20, 2015

The Contractor shall limit public inconveniences and safety conflicts according to Article 107.09 of the "Standard Specifications" and the following:

Keeping Roads Open to Traffic:

For this project the Contractor shall maintain traffic according to the Maintenance of Traffic Plan shown on the plans. The Contractor shall limit flagging operations affecting the open lanes i.e. flagging for vehicles entering or leaving the construction site etc…, to the following times:

Monday - Friday	*9:00 am*	*to*	*3:00 pm*
Saturday	*9:00 am*	*to*	*3:00 pm*

At all other times, including periods of no construction activity, the Contractor shall maintain the available traffic lanes.

If local and/or area conditions warrant the above times may be adjusted (i.e. lengthened or shortened) by the Engineer. To request a change the Contractor shall submit to the Engineer a plan including the revised start and end time a minimum of 48 hours prior to the proposed revision. The Engineer will notify the Contractor 24 hours in advance with an approval or disapproval.

If the Contractor fails to provide a plan and/or the Contractor disregards the decision by of the Engineer the Traffic Control Deficiency Charge will be applied as stated in the Special Provisions for Traffic Control and Protection.

Safety and Convenience: *The Contractor shall maintain entrances along the proposed improvement. Interference with traffic movements and inconvenience to owners of abutting property and the public shall be kept to a minimum. Any delays or inconveniences caused by the Contractor, by complying with these requirements shall be considered as included in the unit bid prices of the contract and no additional compensation will be allowed.*

Contractors shall plan their work so that there will be no open holes in the pavement and that all barricades will be removed from the roadway during non-working hours, except where required for public safety.

Steel road plates may be used as temporary cover over excavations. Anytime steel road plates are in the roadway these requirements apply:

- *The steel road plate shall sit flat on the pavement and be free of defects and warping*
- *It shall be shimmed with a non-asphaltic material to prevent vertical movement*

- *If the steel road plate is not under constant surveillance, it shall be pinned to prevent horizontal movement by a minimum of 6 pins; 4 pins predrilled into the corners of the plates and 1 pin predrilled into each side parallel to the trench. Pins shall be drilled 3 inches into the pavement and not protrude above the pavement surface*
- *The steel road plate shall be at least 1 inch thick and large enough to allow a minimum of 1 foot of bearing on each side of the trench*
- *A one foot wide HMA surface course ramp shall be placed around the perimeter of the plate*
- *Multiple steel road plates shall be tack welded together to prevent separation if they are not under constant surveillance*
- *Appropriate advanced warning signs (W8-24 "STEEL PLATE AHEAD" and W8-1 "BUMP") are required*

Steel road plates may be left in place overnight, in emergency situations and with the concurrence of the Engineer. Steel road plates left in place overnight shall be attached to the roadway by a minimum of 6 pins; 4 pins predrilled into the corners of the plates and 1 pin predrilled into each side parallel to the trench. Pins shall be drilled 3 inches into the pavement and not protrude above the pavement surface.

Steel road plates left in-place for more than 72 hours, shall also be:

- *Recessed into the street surface the thickness of the steel road plate with no difference in elevation with the existing surface*
- *Secured in-place to prevent horizontal movement with HMA surface course between the existing pavement vertical edge and the steel road plate*

Road plates shall not be used from November 15th to April 15th without approval from the Engineer.

ARTICLE 107.20 PROTECTION AND RESTORATION OF PROPERTY (LCDOT)

Effective: January 1, 2007
Revised: May 19, 2014

The Contractor shall protect and restore property according to Article 107.20 of the "Standard Specifications" and the following:

Trees and Shrubs: *Extra care shall be exercised when operating equipment around trees or shrubs. Injured branches or roots shall be pruned in a manner satisfactory to the Engineer and shall be painted where the cut was made. Roots exposed during excavating operations shall be neatly pruned and covered with topsoil. This work shall be done as soon as possible and shall be considered as included in the unit bid price(s) of the various excavation (e.g. Earth Excavation, Excavating and Grading Existing Shoulder, Structure Excavation, Furnished Excavation etc...) and excavation related (e.g. Storm Sewers, Grading and Shaping Ditches, Concrete Foundations, etc...) work items shown in the Summary of Quantities. No additional compensation will be allowed this work.*

ARTICLE 107.23 PROTECTION OF STREAMS, LAKES, RESERVOIRS, NATURAL AREAS, WETLANDS, PRAIRIE AREAS, SAVANNAHS, AND ENDANGERED AND THREATENED SPECIES (LCDOT)

Effective: April 1, 2008
Revised: May 19, 2014

CONCRETE WASHOUT FACILITY

Description: The Contractor shall take sufficient precautions to prevent pollution of streams, lakes, reservoirs, and wetlands with fuels, oils, bitumens, calcium chloride, or other harmful materials according to Article 107.23 of the "Standard Specifications".

General: *To prevent pollution by residual concrete and/or the by product of washing out the concrete trucks, concrete washout facilities shall be constructed and maintained on any project which includes cast-in-place concrete items. The concrete washout shall be constructed, maintained, and removed according to this special provision and LCDOT standard LC4202 included in these plans. Concrete washout facilities shall be required on all projects regardless of the need for NPDES permitting. On projects requiring NPDES permitting, concrete washout facilities shall also be addressed in the Storm Water Pollution Prevention Plan.*

The concrete washout facility shall be constructed on the job site according to LC4202. The Contractor may elect to use a pre-fabricated portable concrete washout structure. The Contractor shall submit a plan for the concrete washout facility, to the Engineer for approval, a minimum of 10 calendar days before the first concrete pour. The working concrete washout facility shall be in place before any delivery of concrete to the site. The Contractor shall ensure that all concrete washout activities are limited to the designated area.

The concrete washout facility shall be located no closer than 50 feet from any environmentally sensitive areas, such as water bodies, wetlands, and/or other areas indicated on the plans. Adequate signage shall be placed at the washout facility and elsewhere as necessary to clearly indicate the location of the concrete washout facility to the operators of concrete trucks.

The concrete washout facility shall be adequately sized to fully contain the concrete washout needs of the project. The contents of the concrete washout facility shall not exceed 75% of the facility capacity. Once the 75% capacity is reached, concrete placement shall be discontinued until the facility is cleaned out. Hardened concrete shall be removed and properly disposed of outside the right-of-way. Slurry shall be allowed to evaporate, or shall be removed and properly disposed of outside the right-of-way. The Contractor shall immediately replace damaged basin liners or other washout facility components to prevent leakage of concrete waste from the washout facility. Concrete washout facilities shall be inspected by the Contractor after each use. Any and all spills shall be reported to the Engineer and cleaned up immediately. The Contractor shall remove the concrete washout facility when it is no longer needed.

Basis of Payment: This work will not be paid for separately, but shall be included in unit bid prices of the various concrete work items(e.g. portland cement concrete pavement; portland cement concrete sidewalk, and combination concrete curb and gutter etc…), shown in the Summary of Quantities.

ARTICLE 107.25 PROTECTION AND RESTORATION OF TRAFFIC SIGNS (LCDOT)

Effective: January 1, 2007
Revised: May 19, 2014

The Contractor shall protect and restore traffic signs within the limits of the project according to Article 107.25 of the "Standard Specifications" and the following:

1. *All signs removed shall be reinstalled 16 feet to 18 feet off the edge of pavement where possible. In curb sections this will vary and will be determined by the Lake County Division of Transportation.*

2. *All single sign installations shall be installed with the bottom of the sign 5 feet above edge of pavement in rural districts, and 7 feet above the edge of pavement in business, commercial or residential districts. On installations having two or more signs, the bottom of the lowest sign shall be 4 feet above edge of pavement.*

3. *All signs replaced will be erected using new "Telespar" system metal bases cut 42" long from 2¼" square material. They are to be driven into solid ground using a pneumatic driver. This work will not be paid for separately but shall be included in the lump sum cost of TRAFFIC CONTROL AND PROTECTION (SPECIAL).*

ARTICLE 107.27 INSURANCE (LCDOT)

Effective: January 1, 2007
Revised: May 19, 2014

The Contractor shall obtain and thereafter keep in force insurance according to Article 107.27 of the "Standard Specifications" and the following:

The minimum Employers Liability limits listed in paragraph 107.27(a)(2) shall be increased to the following limits:

(2) Employers Liability
   a. Each Accident $1,000,000
   b. Disease-policy limit $1,000,000
   c. Disease-each employee $1,000,000

The minimum Commercial General Liability limits listed in paragraph 107.27(b) shall be increased to the following limits along with the addition of a Personal and Advertising Injury Limit:

(1) General Aggregate Limit $4,000,000
(2) Products-Completed Operations Aggregate Limit $4,000,000
(3) Personal and Advertising Injury Limit $1,000,000
(4) Each Occurrence Limit $2,000,000

The minimum Commercial Automobile Liability limit listed in paragraph 107.27(c) shall remain at:

Bodily Injury & Property Damage
Liability Limit Each Occurrence $1,000,000

In addition to the Department, its officers, and employees, coverage shall be provided for Lake County, its agents, officers and employees, named as additional insured under ISO (Insurance Services Office) additional insured endorsement CG 20 26, edition date 07/04 or its equivalent. Coverage shall be provided for Lake County, its officers, agents and employees, all members of Boards, Commissions, Committees, Trustees and Organizations of the County, all volunteers and members of volunteer organizations and other non-paid personnel, including college and high school interns, while acting on behalf of the County. The Contractor's insurance shall be primary and non-contributory.

The contractual liability insurance coverage shall be broad enough to respond to the liability assumed by the Contractor in the following Hold Harmless Clause:

> Hold Harmless Clause
> *The Provider agrees to indemnify, save harmless and defend the County of Lake, its agents, servants, and employees and each of them against and hold it and them harmless from any and all lawsuits, claims, demands, liabilities, losses and expenses, including court costs and attorney's fees, for or on account of any injury to any person, or any death at any time resulting from such injury, or any damage to property, which may arise or which may be alleged to have arisen out of or in connection with the work covered by this contract. The foregoing indemnity shall apply except if such injury, death or damage is caused directly by the willful and wanton conduct of the County of Lake, its agents, servants, or employees or any other person indemnified hereunder.*

In the event the Contractor fails to obtain or maintain any insurance coverage required under this agreement, Lake County may purchase such insurance coverage and charge the expense thereof to the Contractor.

ARTICLE 107.29 OPENING OF SECTION OF HIGHWAY TO TRAFFIC (LCDOT)

Effective: January 1, 2007
Revised: May 19, 2014

Work under construction shall be opened to traffic according to Article 107.29 of the "Standard Specifications" and the following:

The Contractor shall work expeditiously to open traffic lanes closed due to roadwork. The Engineer shall be the sole judge of when a lane is ready to be opened to traffic. The opening of a lane to traffic shall be in accordance to Section 107.29 of the "Standard Specifications".

Roadwork requiring a closure of a lane, which has been opened previously to traffic, will be allowed at the discretion of the Engineer and under the following conditions:

1. *The lane closure shall only be in effect while workers are present in or near the closed lane.*
2. *The closed lane will be reopened to traffic at the end of the workday.*
3. *All traffic control devices pertaining to the lane closure shall be removed from the roadway at the end of the workday.*

SECTION 108 PROSECUTION AND PROGRESS (LCDOT)

Effective January 1, 2007
Revised: May 19, 2014

It is the intent of the County that this project be constructed in an orderly and timely manner. Toward this end, the Contractor shall take special note of the provisions of Article 105.06, Article 108.01 paragraph 2, and Article 108.02 of the "Standard Specifications" which shall be adhered to.

The Contractor shall coordinate all work between their forces and subcontractors to enable completion within the allotted working days.

ARTICLE 108.06 LABOR, METHODS, AND EQUIPMENT

Effective: May 29, 2015

The Contractor and each subcontractor shall meet the requirements of LRS12, Special Provision for Wages of Employees on Public Works except as follows:

The certified payroll(s) submitted by the Contractor and each subcontractor shall be submitted electronically in a PDF format. The accompanying statement signed by the Contractor or subcontractor may be scanned or contain an electronic signature. The documents shall be submitted via e-mailed to the Engineer.

DIVISION 200. EARTHWORK, LANDSCAPING, AND EROSION CONTROL

DIVISION 200 PHOSPHORUS FERTILIZER NUTRIENT BAN (LCDOT)

Effective: January 1, 2009
Revised: May 19, 2014

Phosphorus Fertilizer Nutrient shall not be used on Lake County Highways.

ARTICLE 202.03 REMOVAL AND DISPOSAL OF SURPLUS, UNSTABLE, AND UNSUITABLE MATERIALS AND ORGANIC WASTE (LCDOT)

Effective: February 18, 2013
Revised: May 19, 2014

Description: This work shall consist of the off-site disposal of excess soil generated by Lake County Division of Transportation (LCDOT) contract construction projects.

Definitions:

Clean construction or demolition debris (CCDD): CCDD is uncontaminated broken concrete without protruding metal bars, bricks, rock, stone, or reclaimed asphalt pavement generated from construction or demolition activities. CCDD material may include small incidental quantities of soil that are comingled as part of the removal process. When uncontaminated soil is mixed with any of these materials, the uncontaminated soil is also considered CCDD. Uncontaminated soil that is not mixed with other CCDD materials is not CCDD.

Uncontaminated Soil: What constitutes "uncontaminated soil" for purposes of CCDD and uncontaminated soil fill operations is defined in 35 Ill. Adm. Code 1100. Uncontaminated soil means soil that does not contain contaminants in concentrations that pose a threat to human health and safety and the environment.

General: Removed pavement and/or aggregate with minimal incidental soil are considered to be CCDD and may be taken to a CCDD site for disposal. IEPA forms 662 and/or 663 are not required for this construction material.

Excess soil from the installation of drainage structures, storm sewers, culverts, traffic signals, light poles etc.., shall be kept separate from all CCDD. A limited amount of excess soil is expected to be generated by this project. No pH tests or tests for contamination have been conducted by LCDOT for this project site. Excess soil shall be disposed of as follows:

a) The excess soil shall be disposed of at a licensed landfill.

b) The Contractor may elect to use a CCDD facility. The Contractor shall perform all necessary field and laboratory analysis and to obtain the licensed professional engineer's certification required as per Public Act 96-1416 to use the CCDD Facility. Any and all costs associated with CCDD disposal i.e. testing, transport, tipping fees, rejected loads, etc.., shall be the responsibility of the Contractor. No additional compensation will allowed or provided. Additionally the Contractor shall be responsible for all costs associated with the proper disposal of all rejected loads.

c) With the consent of the Engineer, the excess soil may be transported and used as fill, within the LCDOT right-of-way, on other LCDOT construction projects. The Contractor shall be responsible for making all arrangements, including coordinating with Engineer for both projects, as well as with the Contractor for the other project. The Contractor shall coordinate the transportation and placing of the excess soil on the other project. No additional compensation will allowed or provided for this option.

d) With the consent of the Engineer the Contractor may dispose of the excess material on the job site. If the soil is used for fill locations within the right-of-way but outside the project construction limits, the Contractor shall specify to the Engineer, in writing, how the landscape restoration of the fill area(s) will be accomplished. The excess soil placement shall not result in any flood plain or wetland impacts. The excess soil placement shall not reduce sight distance for vehicles on the roadway or adjoining entrances or side roads. The material shall be graded to blend in with the surrounding ground to the Engineer's satisfaction.

Method of Measurement: This work will not be measured for payment.

Basis for Payment: The off-site disposal of excess excavated material, including transportation, facility disposal fees and all other work necessary, will not be paid for separately, but shall be included in the contract unit price of the work item from which the excess soil was generated.

DIVISION 300. SUBGRADES, SUBBASES, AND BASE COURSES

35101400 AGGREGATE BASE COURSE, TYPE B (LCDOT)

Effective: December 14, 2012
Revised: May 19, 2014

Description: This work shall consist of furnishing and placing aggregate base course material on a prepared subgrade or subbase.

Materials: The aggregate shall meet the requirements of Article 1004.04 of the "Standard Specifications" except that:

The aggregate material shall be limited to crushed gravel, crushed stone or crushed concrete.

The plasticity index requirements will be waived.

General: The work shall be performed according to Section 351 of the "Standard Specifications".

Method of Measurement: Aggregate Base Course, Type B will be measured for payment in tons according to Article 311.08(b) of the "Standard Specifications". The following excess moisture content correction will apply to Aggregate Base Course, Type B:

> When the unit of measurement for the aggregate is tons, the aggregate may be weighed in trucks or freight cars. The Contractor shall furnish or arrange for the use of scales of a type approved by the Engineer. If, at the time the Type B aggregate is weighed, it contains more than six percent of absorbed and free moisture by weight, a deduction for the amount of moisture in excess of this amount will be made in determining the pay quantity. Any aggregate that has been stockpiled will be weighed at the time it is incorporated into the work.

Basis of Payment: This work will be paid for at the contract unit price per ton for AGGREGATE BASE COURSE, TYPE B. *The unit price shall include all equipment, materials and labor required to furnish, weigh and place the base course.*

DIVISION 400. SURFACE COURSES, PAVEMENTS, REHABILITATION, AND SHOULDERS

ARTICLE 406.11 SURFACE TESTS (LCDOT)

Effective: April 1, 2008
Revised: May 19, 2014

The completed surface course will be tested for smoothness in the wheel paths with a 16 ft straightedge according to Article 406.11 of the "Standard Specifications" and the following:

The Contractor shall furnish the appropriate personnel and equipment required to perform the surface course testing according to Article 406.11 of the "Standard Specifications". The testing shall be performed to the satisfaction of the Engineer. The testing shall be performed at a time and date chosen by the Engineer, which may or may not be the day of paving. Traffic control and protection for the testing shall be included. The testing, including all required personnel and equipment, will be considered included in the unit bid prices for Hot-Mix Asphalt Surface Course of the Mix and, N value specified and provided at no additional cost to the Department. No additional compensation will be allowed for testing not performed on the day of paving.

At the Engineer's discretion the surface testing may include sections of the highway repaired with partial depth or full depth pavement patching and/or areas of pavement replacement.

440001XX HOT-MIX ASPHALT SURFACE REMOVAL
X4401198 HOT-MIX ASPHALT SURFACE REMOVAL VARIABLE DEPTH (LCDOT)

Effective: January 1, 2007
Revised: May 19, 2014

Description: This work shall consist of removing the existing hot-mix asphalt (HMA) surface to a depth specified on the plans with a self-propelled milling machine.

General: The work shall be performed according to Section 440 of the "Standard Specifications" and the following:

If the milling machine cuts too deep or tears out areas of the existing pavement which were not designated for removal, the holes shall be filled with leveling binder at the Contractor's expense.

Temporary ramps at butt joints shall be provided according to Article 406.08 of the "Standard Specifications". Temporary ramps will not be paid for separately but shall be included in the contract unit bid price for the hot-mix asphalt surface removal, of the depth specified.

Penalty – Failure by the Contractor to provide the temporary bituminous ramp shall be grounds for assessment of a penalty of **$100.00** *per lane, per day, per ramp location, for each calendar day thereafter that such facility remains incomplete, after written notification from the Engineer. Such penalty shall be deducted from monies due or to become due to the Contractor under the Contract.*

Method of Measurement: Hot-Mix Asphalt Surface Removal will be measured for payment in place and the area computed in square yards for each specified increment thickness of material removed.

Basis of Payment: This work will be paid for at the contract unit price per square yard for HOT-MIX ASPHALT SURFACE REMOVAL of the depth specified. *The unit price shall include all equipment, materials, and labor required to remove the HMA surface.*

44201XXX CLASS D PATCHES (LCDOT)

Effective: January 1, 2007
Revised: May 5, 2015

Description: This work shall consist of removing the existing pavement, excavating the subgrade if necessary, and placing new pavement - class D patches of the type specified, at locations designated by the Engineer.

Materials: The materials shall meet the requirements of Article 442.02 of the "Standard Specifications".

The Hot-Mix Asphalt Base Course will be designed and constructed according to Section 355 of the "Standard Specifications".

General: The work shall be performed according to Section 442 of the "Standard Specifications" and the following:

The pavement patching shall be limited to 10" of Hot-Mix Asphalt Base Course.

The quantities shown on the plans are estimated. The actual size and location of patches will be determined in the field by the Engineer after the milling is complete.

Method of Measurement: Class D Patches will be measured for payment in place, and the area computed in square yards.

Basis of Payment: CLASS D PATCHES will be paid for at the contract unit price per square yard for the depth and type specified. *The unit price shall include all equipment, materials and labor required to install the patches.*

IDOT SPECIAL PAY ITEMS FOR ROAD AND BRIDGE CONSTRUCTION

Z0038121 PORTLAND CEMENT CONCRETE SURFACE REMOVAL 2”

Description: This work shall consist of removing the top 2” of existing concrete two feet either side of an existing pavement joint with a milling machine.

General: The work shall be performed according to Section 440 of the “Standard Specifications” and the following:

If the milling machine cuts too deep or tears out areas of the existing pavement which were not designated for removal, the holes shall be filled with leveling binder at the Contractor's expense.

The Contractor shall only mill patches to be resurfaced the same day. No milled areas shall be left open past the end of the allowable lane closure time.

Removed materials shall be disposed of outside the limits of the right-of-way according to Article 202.03 of the “Standard Specifications” and/or as directed by the Engineer.

Method of Measurement: Portland Cement Concrete Surface Removal will be measured for payment in place and the area computed in square yards.

Basis of Payment: This work will be paid for at the contract unit price per square yard for PORTLAND CEMENT CONCRETE SURFACE REMOVAL 2”. *The unit price shall include all equipment, materials, and labor required to remove and dispose of the concrete surface.*

<u>Traffic Control Plan</u> (L.C.-T- Section 700)
Effective 06/01/2012

Traffic Control shall be performed according to the applicable sections of the “Standard Specifications”, the “Supplemental Specifications”, the "Illinois Manual on Uniform Traffic Control Devices for Streets and Highways”, the “Quality Standard for Work Zone Traffic Control Devices”, any special details and Highway Standards as shown on the plans and the special provisions contained herein.

Special attention is called to Articles 105.03(b), 105.05, and 107.09, and to Sections 701, 704, and 782 of the “Standard Specifications”, and to the following Highway Standards, Details, Recurring Special Provisions and Special Provisions contained herein, relating to traffic control.

The Contractor shall contact the Engineer at least 72 hours in advance of beginning work.

STANDARDS

701006-05	701301-04	701311-03
701501-06	701901-05	

DETAILS

LC7000	LC7004	LC7005	LC7200

RECURRING SPECIAL PROVISIONS

LRS3 Special Provision for Work Zone Traffic Control Surveillance

DETOURS

Detours and road closures on county maintained roads within Lake County, Illinois shall be according to the applicable Articles and Sections of the “Standard Specifications”, the “Supplemental Specifications”, the “Illinois Manual on Uniform Traffic Control Devices for Streets and Highways”, the Lake County Division of Transportation’s Detour Procedures and Guidelines, any special details and Highway Standards as shown on the Detour Plan and the Special Provisions contained herein. The LCDOT Detour Procedures and Guidelines are available from the LCDOT, Traffic Engineering Section upon request.

<u>Traffic Control and Protection (Special)</u> (L.C.-T- Section 700)
Effective 06/01/2012

The Traffic Control and Protection (Special) shall meet the requirements of Division 700. Work Zone Traffic Control and Protection, Signing, and Pavement Marking of the "Standard Specifications" except as follows:

Article 701.01 Description shall be replaced with the following:

> **701.01 Description**. This item of work shall consist of furnishing, installing, maintaining, replacing, relocating and removing all traffic control devices used for the purpose of regulating, warning or directing traffic during the construction or maintenance of this improvement.

Article 701.02 Materials shall be modified by adding the following paragraph:

> Traffic control devices include signs and their supports, signals, pavement markings, barricades and their approved weights, channeling devices, warning lights, arrow boards, flaggers, or any other device used for the purpose of regulating, detouring, warning or guiding traffic through or around the construction zone.

Article 701.04 General shall be modified by adding the following as the first paragraph:

> Traffic Control and Protection (Special) shall be provided as shown on the plans and applicable Highway Standards; as required in these special provisions and the applicable sections of the "Standard Specifications"; and/or as directed by the Engineer.

Article 701.04 General shall be modified by adding the following to the fourth paragraph:

> The Contractor shall dispatch men, materials, and equipment to correct any such deficiencies. The Contractor shall respond to any call from LCDOT concerning any request for improving or correcting traffic control devices and begin making the requested repairs within two hours from the time of notification.

Article 701.10 Surveillance shall be replaced with the following:

The Contractor is required to conduct routine inspections of the work site at a frequency that will allow for the timely replacement of any traffic control device that has become displaced, worn or damaged to the extent that it no longer conforms to the shape, dimensions, color and operational requirements of the MUTCD, the Traffic Control Standards, the IDOT Quality Standard For Work Zone Traffic Control Devices, or will no longer present a neat appearance to motorists. A sufficient quantity of replacement devices, based on vulnerability to damage, shall be readily available to meet this requirement.

The Contractor shall ensure that all the traffic control devices he/she installs are operational, functional and effective 24 hours a day, seven days a week, including holidays.

Article 701.13 Flaggers (a) shall be modified by revising the second paragraph of subparagraph (a) by adding the following:

The Engineer will determine when a side road or entrance shall be closed to traffic. The flagger shall be positioned as shown on the plans or as directed by the Engineer.

Article 701.14 Signs (a) Road Construction Ahead Signs shall be modified by changing the following in the paragraph:

"ROAD WORK AHEAD" signs shall be required in lieu of "ROAD CONSTRUCTION AHEAD" SIGNS

Article 701.14 Signs (b) Work Zone Speed Limit Signs shall be revised to read:

(b) Work Zone Speed Limit Signs. The Lake County Division of Transportation will specify whether a project meets the criteria for a Work Zone Speed Limit. When specified, the work zone speed limit signs shall be installed as shown on the LCDOT Work Zone Speed Limit Signing Diagram, LC7203, at a maximum of 20 feet lateral distance of the locations shown on the plans. Failure to install and maintain the required amount of signs at the proper sign spacing shall result in an immediate traffic control deficiency.

All permanent "SPEED LIMIT" signs located within the work zone shall be removed or covered. If the speed limit sign is to be covered, it shall be done in a manner that no part of the legend shall be visible in any lighting condition. This work shall be completed by the Contractor after the method of covering the speed limit signs has been approved by the Engineer.

The work zone speed limit signs and the end work zone speed limit signs in advance of and at the end of the lane closure(s) shall be used for the duration of the closure(s).

The work zone speed limit signs will be removed when roadway conditions return to normal or when the construction project is suspended for more than 30 days.

Article 701.14 Signs shall be modified by adding the following section (c),

(c) Temporary Construction Information Signs. When indicated in the traffic control plan or as directed by the Engineer the Contractor shall furnish, install, maintain, relocate, and remove for various stages of construction Temporary Construction Information Signs.

Temporary Construction Information Signs may include:

Driveway	White Legend on Green Background
Caution – New Lanes Open	Black Legend on Orange Background

The signs, as shown on Lake County Detail LC7201, shall be installed according to the traffic control plan and/or as directed by the Engineer.

Article 701.15 Traffic Control Devices (b) Type I, II and III Barricades shall be deleted and replaced with the following:

Type II barricades shall be used at all locations that call for Type I, or Type II barricades.

Type II barricades are used to channelize traffic; to delineate unattended obstacles, patches, excavations, drop-offs, and other hazards; and as check barricades

Any drop off greater than three inches, but less than six inches, located within eight feet of the pavement edge shall be protected by Type II barricades equipped with mono-directional steady burn lights. The barricades shall be placed at a spacing of 100 feet center to center. For any drop off within eight feet of the pavement edge that exceeds six inches, the Type II barricades equipped with mono-directional steady burn lights shall be placed at a spacing of 50 feet center to center. Barricades that must be placed in excavated areas shall have leg extensions installed so that the top of the barricade is in compliance with the height requirements of IDOT Standard 701901.

Check barricades shall be placed in work areas perpendicular to traffic every 1,000 feet, at one per lane and one per shoulder, to prevent motorists from using work areas as a traveled way. Two additional check barricades shall be placed in advance of each patch excavation or any other hazard in the work area. The first will be placed at the edge of the open traffic lane and the second centered on the closed lane. Check barricades shall be Type II and equipped with flashing amber light.

Type III barricades are used to close traffic lanes and to close roads.

Article 701.15 Traffic Control Devices (e) Direction Indicator Barricades shall be modified by adding the following paragraph.

The direction indicator barricades shall meet the requirements for Type II barricades as stated in this special provision. The top panel, which faces traffic, shall be as shown in IDOT Highway Standard 701901. The top panel, facing away from traffic shall have a 12 inch x 24 inch orange and white diagonal panel. The bottom panels shall be eight inches x 24 inches with orange and white diagonal sheeting, as shown in LCDOT's Special Detail LC7200.

Article 701.15 Traffic Control Devices (j) Portable Changeable Message Signs shall be modified by adding the following paragraphs:

The PCMS shall be compatible and fully functional with the LCDOT's Transportation Management Center PASSAGE PCMS Control Software. A list of approved PCMS's manufacturers and traffic control vendors is available upon request from the LCDOT. The PCMS shall be tested and approved by the LCDOT and can be sufficiently controlled by the LCDOT NTCIP compliant software. If the PCMS has not been tested or approved by either the Illinois State Toll Highway Authority or the LCDOT then the PCMS will need to be tested and certified by the Delcan Corporation at the Contractor's expense.

Lake County Division of Transportation (PASSAGE)
Software Developer:
Delcan
650 East Algonquin Road, Suite 101
Schaumburg, IL 60173

In case of a Traffic Incident Management (TIM) event or other County/State declared Emergency Management event, the use of the PCMS may be pre-empted from the Contractor's use by the Lake County Transportation Management Center for the duration of the incident. If the PCMS must be moved from the limits of the work site to an offsite location to better facilitate

the use of the PCMS during the incident, the Contractor will be compensated for the labor and equipment to move the PCMS to the designated location and back, according to Article 109.04 (b) of the "Standard Specifications". In order to facilitate the movement of the PCMS in a timely manner, the LCDOT may use County Forces to move the PCMS to the designated location and/or back, at no additional cost to the Contractor.

When the sign(s) are displaying messages, they shall be considered a traffic control device. At all other times when no message is displayed, they shall be considered equipment.

Basis of Payment. Changeable message signs will be paid for at the contract unit price per calendar month for each sign as CHANGEABLE MESSAGE SIGN, as stated in Article 701.20 of this special provision.

Article 701.17 Specific Construction Operations (c) Surface Courses and Pavement (1) Prime Coat shall be replaced by the following:

(1) Prime Coat. "FRESH OIL" signs (W21-2) shall be used when the prime coat is applied to pavement that is open to traffic. The signs shall remain in place until tracking of the prime ceases. These signs shall be erected a minimum of 500 feet preceding the start of the prime and on all side roads within the posted area. The signs on the side roads shall be posted a minimum of 200 feet from the mainline pavement. These signs are excluded from the time requirements of Article 701.04 of the "Standard Specifications" as modified by this special provision (above). Non-compliance with the provisions of this section, by the Contractor, shall result in an immediate traffic control deficiency deduction. All signs shall have an amber flashing light attached.

Article 701.17 Specific Procedures (c) Surface Courses and Pavement (2) Cold Milling shall be replaced by the following:

(2) Cold Milling. "ROUGH GROOVED SURFACE" signs (W8-I107) shall be used when the road has been cold milled and is open to traffic. The signs shall remain in place until the milled surface condition no longer exists. These signs shall be erected a minimum of 500 feet preceding the start of the milled pavement and on all side roads within the posted area. The signs on the side roads shall be posted a minimum of 200 feet from the mainline pavement. Non-compliance with the provisions of this section, by the Contractor, shall result in an immediate traffic control deficiency deduction. All signs shall have an amber flashing light attached.

Article 701.17 Specific Procedures (c) Surface Course and Pavement shall be modified by adding the following paragraph:

(6) Area Reflective Crack Control Treatment Fabric. "SLIPPERY WHEN WET" signs (W8-5) shall be used when crack control fabric is applied to pavement that is open to traffic. These signs shall remain in place until the binder course is laid. The signs shall be erected a minimum of 500 feet preceding the start of the crack control treatment and on all side roads within the posted area. The signs on the side roads shall be posted a minimum of 200 feet from the mainline pavement. These signs are excluded from the time requirements of Article 701.04 of the "Standard Specifications" as modified by this special provision (above). Non-compliance with the provisions of this section, by the Contractor, shall result in an immediate traffic control deficiency deduction. All signs shall have an amber flashing light attached.

Article 701.18 Highway Standards Application (b) Standard 701316 and 701321 (2) g. Detector Loops, shall be replaced with the following:

g. Detection. Microwave Vehicle Sensors shall be installed as directed by the Engineer. The LCDOT shall approve the proposed microwave vehicle sensor before the Contractor may furnish or install it. The Contractor shall install, wire and adjust the alignment of the sensor according to the manufacturer's recommendations and requirements. The Engineer shall approve the installation. An alternate method of detection may be used if it has been demonstrated and approved by the Department.

The microwave vehicle sensor shall meet the following requirements:

- Detection Range: Adjustable to 60 feet
- Detection Angle: Adjustable, horizontal and vertical
- Detection Pattern: 16 degree beam width minimum [at 50 feet the pattern shall be approximately 15.5 feet wide]
- Mounting: Heavy-duty bracket, predrilled and slotted for pole mounting
- LED Indicator Light: For detection verification

Article 701.18 Highway Standards Application (j) Urban Traffic Control, Standards 701501, 701502, 701601, 701602, 701606, 701701, and 701801 (1) General, shall be modified by adding the following paragraphs:

Whenever a lane is closed to traffic using IDOT standard 701601, 701606, or 701701, the pavement width transition sign (W4-2R or W4-2L) shall be used in lieu of the "WORKERS" sign (W21-1 or W21-1a)

Whenever any vehicle, equipment, workers or their activities infringe on the shoulder or within 15 feet of the traveled way, and the traveled way remains unobstructed, then the applicable Traffic Control Standard shall be 701006, 701011, 701101, or 701701. The "SHOULDER WORK AHEAD" sign (W21-5(0)-48) shall be used in lieu of the "WORKERS" sign (W21-1 or W-21-1a).

Article 701.18 Highway Standards Application shall be modified by adding the following section (l):

(l) IDOT standard 701331. When IDOT standard 701331 is specified on two-lane, two-way roadways, a “LANE SHIFT AHEAD” sign shall be added 500 feet in advance of W1-3 or W1-4 sign. The Road Work sign (W20-1) shall be extended to a total of 1500’ from the start of the lane shift.

Article 701.19 Method of Measurement shall be replaced completely with the following:

701.19 Method of Measurement.

These items of work will be measured on a lump sum basis for furnishing installing, maintaining, replacing, relocating and removing the traffic control devices required in the plans and these special provisions.

Article 701.20 Basis of Payment shall be replaced completely with the following:

701.20 Basis of Payment

This work will be paid for at the contract unit price per lump sum for TRAFFIC CONTROL AND PROTECTION (SPECIAL). The payment will be in full for all labor, materials, transportation, and incidentals necessary to furnish, install, maintain, replace, relocate and remove all traffic control devices indicated in the plans and specifications, except for the following items, which will be paid for separately.

1) Temporary Bridge Traffic Signals
2) Temporary Rumble Strips [where each is defined as 25 feet]

3) Temporary Raised Pavement Markers
4) Sand module impact attenuators
5) Portable Changeable Message Signs
6) Temporary Concrete Barrier
7) Temporary Pavement Marking-Letters and Symbols
8) Temporary Pavement Marking-Line at width specified

The salvage value of the materials removed shall be reflected in the bid price for this item.

Any delays or inconveniences incurred by the Contractor while complying with these requirements shall be considered as part of TRAFFIC CONTROL AND PROTECTION (SPECIAL) and no additional compensation will be allowed.

Any traffic control devices required by the Engineer to implement the Traffic Control Plan as shown in the plans and specifications of the contract shall be considered included in the pay item TRAFFIC CONTROL AND PROTECTION (SPECIAL).

If the Engineer requires additional work involving a substantial change of location and/or work which differs in design and/or work requiring a change in the type of construction, as stated in Article 104.02(d) of the “Standard Specifications”, the standards and/or the designs, other than those required in the plans, will be made available to the Contractor at least one week in advance of the change in traffic control. Payment for any additional traffic control required for the reasons listed above will be in accordance with Article 109.04 of the “Standard Specifications”.

Revisions in the phasing of construction or maintenance operations, requested by the Contractor, may require traffic control to be installed according to standards and/or designs other than those included in the plans. The Contractor shall submit revisions or modifications to the traffic control plan shown in the contract to the Engineer for approval. No additional payment will be made for a Contractor requested modification.

In the event the sum total of all work items for which traffic control and protection is required is increased or decreased by more than ten percent, the contract bid price for TRAFFIC CONTROL AND PROTECTION will be adjusted as follows:

Adjusted Contract Price = 0.25P + 0.75P [1±(X-0.1]

P = the contract price for TRAFFIC CONTROL AND PROTECTION (SPECIAL)

$$X = \frac{\text{Difference between original and final value of work for which traffic control and protection is required.}}{\text{Original value of work for which traffic control and protection is required.}}$$

The value of the work items used in calculating the increase and decrease will include only items that have been added to or deducted from the contract under Article 104.02 of the “Standard Specifications” and only items that require the use of TRAFFIC CONTROL AND PROTECTION (SPECIAL).

In the event LCDOT cancels or alters any portion of the contract that result in the elimination or incompletion of any portion of the work, payment for partially completed work will be made according to Article 104.02 of the “Standard Specifications”.

Division of Transportation

Paula J. Trigg, P.E.
Director of Transportation/County Engineer

600 West Winchester Road
Libertyville, Illinois 60048-1381
Phone 847 377 7400
Fax 847 984 5888

The following Special Provisions and Supplemental Specifications approved by the State of Illinois Department of Transportation are applicable for this work and are on file in the office of the Lake County Engineer. Copies are available to prospective bidders upon request.

- Fair Employment Practices, Form LRS11, amended to conform to the latest "Equal Employment Opportunity Clause" required by the Illinois Fair Employment Practices Commission as a material form of all public contracts.

- Prevailing Wage Rates for the County of Lake

State of Illinois
Department of Transportation
Bureau of Local Roads and Streets

SPECIAL PROVISION
FOR
EMPLOYMENT PRACTICES

Effective: January 1, 1999

In addition to all other labor requirements set forth in this proposal and in the Standard Specifications for Road and Bridge Construction, adopted by the Department of Transportation, during the performance of this contract, the Contractor for itself, its assignees, and successors in interest (hereinafter referred to as the "Contractor") agrees as follows:

Selection of Labor. The Contractor shall comply with all Illinois statutes pertaining to the selection of labor.

Equal Employment Opportunity. During the performance of this contract, the Contractor agrees as follows:

(a) That it will not discriminate against any employee or applicant for employment because of race, color, religion, sex, national origin, ancestry, age, marital status, physical or mental handicap or unfavorable discharge from military service, and further that it will examine all job classifications to determine if minority persons or women are underutilized and will take appropriate affirmative action to rectify any such underutilization.

(b) That, if it hires additional employees in order to perform this contract or any portion hereof, it will determine the availability of minorities and women in the area(s) from which it may reasonably recruit and it will hire for each job classification for which employees are hired in such a way that minorities and women are not underutilized.

(c) That, in all solicitations or advertisements for employees placed by it or on its behalf, it will state that all applicants will be afforded equal opportunity without discrimination because of race, color, religion, sex, national origin, ancestry, age, martial status, physical or mental handicap or unfavorable discharge from military service.

That it will send to each labor organization or representative of workers with which it has or is bound by collective bargaining or other agreement or understanding, a notice advising such labor organization or representative of the Contractor's obligations under the Illinois Human Rights Act and the Department's Rules and Regulations. If any such labor organization or representative fails or refuses to cooperate with the Contractor in its efforts to comply with so such Act and Rules and Regulations, the Contractor will promptly so notify the Illinois Department of Human Rights and the contracting agency and will recruit employees from other sources when necessary to fulfill its obligations thereunder.

(e) That it will submit reports as required by the Department of Human Rights Rules and Regulations, furnish all relevant information as may from time to time be requested by the Department or the contracting agency, and in all respects comply with the Illinois Human Rights Act and the Department's Rules and Regulations.

(f) That it will permit access to all relevant books, records, accounts and work sites by personnel of the contracting agency Illinois Department of Human Rights for purposes of investigation to ascertain compliance with the Illinois Human Rights Act and the Department's Rules and Regulations.

(g) That it will include verbatim or by reference the provisions of this clause in every subcontract so that such provisions will be binding upon every such subcontractor. In the same manner as with other provisions of this contract, the Contractor will be liable for compliance with applicable provisions of this clause by all its subcontractors; and further it will promptly notify the contracting agency and the Illinois Department of Human Rights in the event any subcontractor fails or refuses to comply therewith. In addition, the Contractor will not utilize any subcontractor declared by the subcontracts with the State of Illinois or any of its political subdivisions or municipal corporations.

Lake County Prevailing Wage for July 2015

(See explanation of column headings at bottom of wages)

Trade Name	RG	TYP	C	Base	FRMAN	M-F>8	OSA	OSH	H/W	Pensn	Vac	Trng
ASBESTOS ABT-GEN		ALL		39.400	39.950	1.5	1.5	2.0	13.98	10.72	0.000	0.500
ASBESTOS ABT-MEC		BLD		36.340	38.840	1.5	1.5	2.0	11.47	10.96	0.000	0.720
BOILERMAKER		BLD		47.070	51.300	2.0	2.0	2.0	6.970	18.13	0.000	0.400
BRICK MASON		BLD		43.780	48.160	1.5	1.5	2.0	10.05	14.43	0.000	1.030
CARPENTER		ALL		44.350	46.350	1.5	1.5	2.0	11.79	16.39	0.000	0.630
CEMENT MASON		ALL		42.050	44.050	2.0	1.5	2.0	10.00	19.24	0.000	0.500
CERAMIC TILE FNSHER		BLD		36.810	0.000	1.5	1.5	2.0	10.55	9.230	0.000	0.770
COMMUNICATION TECH		BLD		35.130	37.230	1.5	1.5	2.0	11.07	11.77	0.000	0.530
ELECTRIC PWR EQMT OP		ALL		0.000	0.000	0.0	0.0	0.0	0.000	0.000	0.000	0.000
ELECTRIC PWR EQMT OP		HWY		39.220	53.290	1.5	1.5	2.0	5.000	12.17	0.000	0.390
ELECTRIC PWR GRNDMAN		ALL		30.330	53.290	1.5	1.5	2.0	5.000	9.400	0.000	0.300
ELECTRIC PWR GRNDMAN		HWY		30.330	53.290	1.5	1.5	2.0	5.000	9.400	0.000	0.300
ELECTRIC PWR LINEMAN		ALL		45.360	51.480	1.5	1.5	2.0	5.000	14.06	0.000	0.450
ELECTRIC PWR LINEMAN		HWY		46.950	53.290	1.5	1.5	2.0	5.000	14.56	0.000	0.470
ELECTRIC PWR TRK DRV		ALL		30.340	51.480	1.5	1.5	2.0	5.000	9.400	0.000	0.300
ELECTRIC PWR TRK DRV		HWY		31.400	53.290	1.5	1.5	2.0	5.000	9.730	0.000	0.310
ELECTRICIAN		BLD		39.400	43.340	1.5	1.5	2.0	13.59	15.71	0.000	0.640
ELEVATOR CONSTRUCTOR		BLD		50.800	57.150	2.0	2.0	2.0	13.57	14.21	4.060	0.600
FENCE ERECTOR		ALL		37.340	39.340	1.5	1.5	2.0	13.05	12.06	0.000	0.300
GLAZIER		BLD		40.500	42.000	1.5	2.0	2.0	13.14	16.99	0.000	0.940
HT/FROST INSULATOR		BLD		48.450	50.950	1.5	1.5	2.0	11.47	12.16	0.000	0.720
IRON WORKER		ALL		44.200	46.200	2.0	2.0	2.0	13.65	21.14	0.000	0.350
LABORER		ALL		39.200	39.950	1.5	1.5	2.0	13.98	10.72	0.000	0.500
LATHER		ALL		44.350	46.350	1.5	1.5	2.0	11.79	16.39	0.000	0.630
MACHINIST		BLD		45.350	47.850	1.5	1.5	2.0	7.260	8.950	1.850	0.000
MARBLE FINISHERS		ALL		32.400	34.320	1.5	1.5	2.0	10.05	13.75	0.000	0.620
MARBLE MASON		BLD		43.030	47.330	1.5	1.5	2.0	10.05	14.10	0.000	0.780
MATERIAL TESTER I		ALL		29.200	0.000	1.5	1.5	2.0	13.98	10.72	0.000	0.500
MATERIALS TESTER II		ALL		34.200	0.000	1.5	1.5	2.0	13.98	10.72	0.000	0.500
MILLWRIGHT		ALL		44.350	46.350	1.5	1.5	2.0	11.79	16.39	0.000	0.630
OPERATING ENGINEER		BLD	1	48.100	52.100	2.0	2.0	2.0	17.55	12.65	1.900	1.250
OPERATING ENGINEER		BLD	2	46.800	52.100	2.0	2.0	2.0	17.55	12.65	1.900	1.250
OPERATING ENGINEER		BLD	3	44.250	52.100	2.0	2.0	2.0	17.55	12.65	1.900	1.250
OPERATING ENGINEER		BLD	4	42.500	52.100	2.0	2.0	2.0	17.55	12.65	1.900	1.250
OPERATING ENGINEER		BLD	5	51.850	52.100	2.0	2.0	2.0	17.55	12.65	1.900	1.250
OPERATING ENGINEER		BLD	6	49.100	52.100	2.0	2.0	2.0	17.55	12.65	1.900	1.250
OPERATING ENGINEER		BLD	7	51.100	52.100	2.0	2.0	2.0	17.55	12.65	1.900	1.250
OPERATING ENGINEER		FLT	1	53.600	53.600	1.5	1.5	2.0	17.10	11.80	1.900	1.250
OPERATING ENGINEER		FLT	2	52.100	53.600	1.5	1.5	2.0	17.10	11.80	1.900	1.250
OPERATING ENGINEER		FLT	3	46.400	53.600	1.5	1.5	2.0	17.10	11.80	1.900	1.250
OPERATING ENGINEER		FLT	4	38.550	53.600	1.5	1.5	2.0	17.10	11.80	1.900	1.250
OPERATING ENGINEER		FLT	5	55.100	53.600	1.5	1.5	2.0	17.10	11.80	1.900	1.250
OPERATING ENGINEER		FLT	6	35.000	35.000	1.5	1.5	2.0	16.60	11.05	1.900	1.250
OPERATING ENGINEER		HWY	1	46.300	50.300	1.5	1.5	2.0	17.55	12.65	1.900	1.250
OPERATING ENGINEER		HWY	2	45.750	50.300	1.5	1.5	2.0	17.55	12.65	1.900	1.250
OPERATING ENGINEER		HWY	3	43.700	50.300	1.5	1.5	2.0	17.55	12.65	1.900	1.250
OPERATING ENGINEER		HWY	4	42.300	50.300	1.5	1.5	2.0	17.55	12.65	1.900	1.250
OPERATING ENGINEER		HWY	5	41.100	50.300	1.5	1.5	2.0	17.55	12.65	1.900	1.250
OPERATING ENGINEER		HWY	6	49.300	50.300	1.5	1.5	2.0	17.55	12.65	1.900	1.250
OPERATING ENGINEER		HWY	7	47.300	50.300	1.5	1.5	2.0	17.55	12.65	1.900	1.250
ORNAMNTL IRON WORKER		ALL		45.000	47.500	2.0	2.0	2.0	13.55	17.94	0.000	0.650
PAINTER		ALL		41.750	46.500	1.5	1.5	1.5	11.50	11.10	0.000	0.770
PAINTER SIGNS		BLD		33.920	38.090	1.5	1.5	1.5	2.600	2.710	0.000	0.000
PILEDRIVER		ALL		44.350	46.350	1.5	1.5	2.0	11.79	16.39	0.000	0.630
PIPEFITTER		BLD		46.000	49.000	1.5	1.5	2.0	9.000	15.85	0.000	1.780
PLASTERER		BLD		43.430	46.040	1.5	1.5	2.0	13.05	14.43	0.000	1.020
PLUMBER		BLD		46.650	48.650	1.5	1.5	2.0	13.18	11.46	0.000	0.880
ROOFER		BLD		41.000	44.000	1.5	1.5	2.0	8.280	10.54	0.000	0.530
SHEETMETAL WORKER		BLD		42.230	45.610	1.5	1.5	2.0	10.53	20.68	0.000	0.720
SIGN HANGER		BLD		31.310	33.810	1.5	1.5	2.0	4.850	3.280	0.000	0.000
SPRINKLER FITTER		BLD		49.200	51.200	1.5	1.5	2.0	11.75	9.650	0.000	0.550
STEEL ERECTOR		ALL		42.070	44.070	2.0	2.0	2.0	13.45	19.59	0.000	0.350
STONE MASON		BLD		43.780	48.160	1.5	1.5	2.0	10.05	14.43	0.000	1.030
~~SURVEY WORKER~~		->NOT IN EFFECT			ALL		37.000	37.750	1.5	1.5	2.0	12.97	9.930	0.000	0.500

TERRAZZO FINISHER	BLD		38.040	0.000	1.5	1.5	2.0	10.55	11.22	0.000	0.720
TERRAZZO MASON	BLD		41.880	44.880	1.5	1.5	2.0	10.55	12.51	0.000	0.940
TILE MASON	BLD		43.840	47.840	1.5	1.5	2.0	10.55	11.40	0.000	0.990
TRAFFIC SAFETY WRKR	HWY		32.750	34.350	1.5	1.5	2.0	6.550	6.450	0.000	0.500
TRUCK DRIVER	ALL	1	36.560	36.760	1.5	1.5	2.0	9.070	7.050	0.000	0.000
TRUCK DRIVER	ALL	2	36.000	36.400	1.5	1.5	2.0	7.200	6.000	0.000	0.150
TRUCK DRIVER	ALL	3	36.200	36.400	1.5	1.5	2.0	7.200	6.000	0.000	0.150
TRUCK DRIVER	ALL	4	36.400	36.400	1.5	1.5	2.0	7.200	6.000	0.000	0.150
TUCKPOINTER	BLD		43.800	44.800	1.5	1.5	2.0	8.280	13.49	0.000	0.670

Legend: RG (Region)
TYP (Trade Type - All,Highway,Building,Floating,Oil & Chip,Rivers)
C (Class)
Base (Base Wage Rate)
FRMAN (Foreman Rate)
M-F>8 (OT required for any hour greater than 8 worked each day, Mon through Fri.
OSA (Overtime (OT) is required for every hour worked on Saturday)
OSH (Overtime is required for every hour worked on Sunday and Holidays)
H/W (Health & Welfare Insurance)
Pensn (Pension)
Vac (Vacation)
Trng (Training)

Explanations

LAKE COUNTY

The following list is considered as those days for which holiday rates of wages for work performed apply: New Years Day, Memorial Day, Fourth of July, Labor Day, Thanksgiving Day, Christmas Day and Veterans Day in some classifications/counties. Generally, any of these holidays which fall on a Sunday is celebrated on the following Monday. This then makes work performed on that Monday payable at the appropriate overtime rate for holiday pay. Common practice in a given local may alter certain days of celebration. If in doubt, please check with IDOL.

EXPLANATION OF CLASSES

ASBESTOS - GENERAL - removal of asbestos material/mold and hazardous materials from any place in a building, including mechanical systems where those mechanical systems are to be removed. This includes the removal of asbestos materials/mold and hazardous materials from ductwork or pipes in a building when the building is to be demolished at the time or at some close future date.

ASBESTOS - MECHANICAL - removal of asbestos material from mechanical systems, such as pipes, ducts, and boilers, where the mechanical systems are to remain.

CERAMIC TILE FINISHER

The grouting, cleaning, and polishing of all classes of tile, whether for interior or exterior purposes, all burned, glazed or unglazed products; all composition materials, granite tiles, warning detectable tiles, cement tiles, epoxy composite materials, pavers, glass, mosaics, fiberglass, and all substitute materials, for tile made in tile-like units; all mixtures in tile like form of cement, metals, and other materials that are for and intended for use as a finished floor surface, stair treads, promenade roofs, walks, walls, ceilings, swimming pools, and all other places where tile is to form a finished interior or exterior. The mixing of all setting mortars including but not limited to thin-set mortars, epoxies, wall mud, and any other sand and cement mixtures or adhesives when used in the preparation, installation, repair, or maintenance of tile and/or similar materials. The handling and unloading of all sand, cement, lime, tile, fixtures, equipment, adhesives, or any other materials to be used in the preparation, installation, repair, or maintenance of tile and/or similar materials. Ceramic Tile Finishers shall fill all joints and voids regardless of method on all tile work, particularly and especially after installation of said tile work. Application of any and all protective coverings to all types of tile installations including, but not be limited to, all soap compounds, paper products, tapes, and all polyethylene coverings, plywood, masonite, cardboard, and any new type of products that may be used to protect tile installations, Blastrac equipment, and all floor scarifying equipment used in preparing floors to receive tile. The clean up and removal of all waste and materials. All demolition of existing tile floors and walls to be re-tiled.

COMMUNICATION TECHNICIAN

Low voltage construction, installation, maintenance and removal of

telecommunication facilities (voice, sound, data and video) including outside plant, telephone, security systems and data inside wire, interconnect, terminal equipment, central offices, PABX, fiber optic cable and equipment, micro waves, V-SAT, bypass, CATV, WAN (wide area network), LAN (local area networks), and ISDN (integrated system digital network), pulling of wire in raceways, but not the installation of raceways.

MARBLE FINISHER

Loading and unloading trucks, distribution of all materials (all stone, sand, etc.), stocking of floors with material, performing all rigging for heavy work, the handling of all material that may be needed for the installation of such materials, building of scaffolding, polishing if needed, patching, waxing of material if damaged, pointing up, caulking, grouting and cleaning of marble, holding water on diamond or Carborundum blade or saw for setters cutting, use of tub saw or any other saw needed for preparation of material, drilling of holes for wires that anchor material set by setters, mixing up of molding plaster for installation of material, mixing up thin set for the installation of material, mixing up of sand to cement for the installation of material and such other work as may be required in helping a Marble Setter in the handling of all material in the erection or installation of interior marble, slate, travertine, art marble, serpentine, alberene stone, blue stone, granite and other stones (meaning as to stone any foreign or domestic materials as are specified and used in building interiors and exteriors and customarily known as stone in the trade), carrara, sanionyx, vitrolite and similar opaque glass and the laying of all marble tile, terrazzo tile, slate tile and precast tile, steps, risers treads, base, or any other materials that may be used as substitutes for any of the aforementioned materials and which are used on interior and exterior which are installed in a similar manner.

MATERIAL TESTER I: Hand coring and drilling for testing of materials; field inspection of uncured concrete and asphalt.

MATERIAL TESTER II: Field inspection of welds, structural steel, fireproofing, masonry, soil, facade, reinforcing steel, formwork, cured concrete, and concrete and asphalt batch plants; adjusting proportions of bituminous mixtures.

OPERATING ENGINEER - BUILDING

Class 1. Asphalt Plant; Asphalt Spreader; Autograde; Backhoes with Caisson Attachment; Batch Plant; Benoto (requires Two Engineers); Boiler and Throttle Valve; Caisson Rigs; Central Redi-Mix Plant; Combination Back Hoe Front End-loader Machine; Compressor and Throttle Valve; Concrete Breaker (Truck Mounted); Concrete Conveyor; Concrete Conveyor (Truck Mounted); Concrete Paver Over 27E cu. ft; Concrete Paver 27E cu. ft. and Under: Concrete Placer; Concrete Placing Boom; Concrete Pump (Truck Mounted); Concrete Tower; Cranes, All; Cranes, Hammerhead; Cranes, (GCI and similar Type); Creter Crane; Spider Crane; Crusher, Stone, etc.; Derricks, All; Derricks, Traveling; Formless Curb and Gutter Machine; Grader, Elevating; Grouting Machines; Heavy Duty Self-Propelled Transporter or Prime Mover; Highlift Shovels or Front Endloader 2-1/4 yd. and over; Hoists, Elevators, outside type rack and pinion and similar machines; Hoists, One, Two and Three Drum; Hoists, Two Tugger One Floor; Hydraulic Backhoes; Hydraulic Boom Trucks; Hydro Vac (and similar equipment); Locomotives, All; Motor Patrol; Lubrication Technician; Manipulators; Pile Drivers and Skid Rig; Post Hole Digger; Pre-Stress Machine; Pump Cretes Dual Ram; Pump Cretes: Squeeze Cretes-Screw Type Pumps; Gypsum Bulker and Pump; Raised and Blind Hole Drill; Roto Mill Grinder; Scoops - Tractor Drawn; Slip-Form Paver; Straddle Buggies; Operation of Tie Back Machine; Tournapull; Tractor with Boom and Side Boom; Trenching Machines.

Class 2. Boilers; Broom, All Power Propelled; Bulldozers; Concrete Mixer (Two Bag and Over); Conveyor, Portable; Forklift Trucks; Highlift Shovels or Front Endloaders under 2-1/4 yd.; Hoists, Automatic; Hoists, Inside Elevators; Hoists, Sewer Dragging Machine; Hoists, Tugger Single Drum; Laser Screed; Rock Drill (Self-Propelled); Rock Drill (Truck Mounted); Rollers, All; Steam Generators; Tractors, All; Tractor Drawn Vibratory Roller; Winch Trucks with "A" Frame.

Class 3. Air Compressor; Combination Small Equipment Operator; Generators; Heaters, Mechanical; Hoists, Inside Elevators (remodeling or renovation work); Hydraulic Power Units (Pile Driving, Extracting, and Drilling); Pumps, over 3" (1 to 3 not to exceed a total of 300 ft.); Low Boys; Pumps, Well Points; Welding Machines (2 through 5); Winches, 4 Small Electric Drill Winches.

Class 4. Bobcats and/or other Skid Steer Loaders; Oilers; and Brick Forklift.

Class 5. Assistant Craft Foreman.

Class 6. Gradall.

Class 7. Mechanics; Welders.

OPERATING ENGINEERS - HIGHWAY CONSTRUCTION

Class 1. Asphalt Plant; Asphalt Heater and Planer Combination; Asphalt Heater Scarfire; Asphalt Spreader; Autograder/GOMACO or other similar type machines: ABG Paver; Backhoes with Caisson Attachment; Ballast Regulator; Belt Loader; Caisson Rigs; Car Dumper; Central Redi-Mix Plant; Combination Backhoe Front Endloader Machine, (1 cu. yd. Backhoe Bucket or over or with attachments); Concrete Breaker (Truck Mounted); Concrete Conveyor; Concrete Paver over 27E cu. ft.; Concrete Placer; Concrete Tube Float; Cranes, all attachments; Cranes, Tower Cranes of all types: Creter Crane: Spider Crane; Crusher, Stone, etc.; Derricks, All; Derrick Boats; Derricks, Traveling; Dredges; Elevators, Outside type Rack & Pinion and Similar Machines; Formless Curb and Gutter Machine; Grader, Elevating; Grader, Motor Grader, Motor Patrol, Auto Patrol, Form Grader, Pull Grader, Subgrader; Guard Rail Post Driver Truck Mounted; Hoists, One, Two and Three Drum; Heavy Duty Self-Propelled Transporter or Prime Mover; Hydraulic Backhoes; Backhoes with shear attachments up to 40' of boom reach; Lubrication Technician; Manipulators; Mucking Machine; Pile Drivers and Skid Rig; Pre-Stress Machine; Pump Cretes Dual Ram; Rock Drill - Crawler or Skid Rig; Rock Drill - Truck Mounted; Rock/Track Tamper; Roto Mill Grinder; Slip-Form Paver; Snow Melters; Soil Test Drill Rig (Truck Mounted); Straddle Buggies; Hydraulic Telescoping Form (Tunnel); Operation of Tieback Machine; Tractor Drawn Belt Loader; Tractor Drawn Belt Loader (with attached pusher - two engineers); Tractor with Boom; Tractaire with Attachments; Traffic Barrier Transfer Machine; Trenching; Truck Mounted Concrete Pump with Boom; Raised or Blind Hole Drills (Tunnel Shaft); Underground Boring and/or Mining Machines 5 ft. in diameter and over tunnel, etc; Underground Boring and/or Mining Machines under 5 ft. in diameter; Wheel Excavator; Widener (APSCO).

Class 2. Batch Plant; Bituminous Mixer; Boiler and Throttle Valve; Bulldozers; Car Loader Trailing Conveyors; Combination Backhoe Front Endloader Machine (Less than 1 cu. yd. Backhoe Bucket or over or with attachments); Compressor and Throttle Valve; Compressor, Common Receiver (3); Concrete Breaker or Hydro Hammer; Concrete Grinding Machine; Concrete Mixer or Paver 7S Series to and including 27 cu. ft.; Concrete Spreader; Concrete Curing Machine, Burlap Machine, Belting Machine and Sealing Machine; Concrete Wheel Saw; Conveyor Muck Cars (Haglund or Similar Type); Drills, All; Finishing Machine - Concrete; Highlift Shovels or Front Endloader; Hoist - Sewer Dragging Machine; Hydraulic Boom Trucks (All Attachments); Hydro-Blaster; Hydro Excavating (excluding hose work); Laser Screed; All Locomotives, Dinky; Off-Road Hauling Units (including articulating) Non Self-Loading Ejection Dump; Pump Cretes: Squeeze Cretes - Screw Type Pumps, Gypsum Bulker and Pump; Roller, Asphalt; Rotary Snow Plows; Rototiller, Seaman, etc., self-propelled; Self-Propelled Compactor; Spreader - Chip - Stone, etc.; Scraper - Single/Twin Engine/Push and Pull; Scraper - Prime Mover in Tandem (Regardless of Size); Tractors pulling attachments, Sheeps Foot, Disc, Compactor, etc.; Tug Boats.

Class 3. Boilers; Brooms, All Power Propelled; Cement Supply Tender; Compressor, Common Receiver (2); Concrete Mixer (Two Bag and Over); Conveyor, Portable; Farm-Type Tractors Used for Mowing, Seeding, etc.; Forklift Trucks; Grouting Machine; Hoists, Automatic; Hoists, All Elevators; Hoists, Tugger Single Drum; Jeep Diggers; Low Boys; Pipe Jacking Machines; Post-Hole Digger; Power Saw, Concrete Power Driven; Pug Mills; Rollers, other than Asphalt; Seed and Straw Blower; Steam Generators; Stump Machine; Winch Trucks with "A" Frame; Work Boats; Tamper-Form-Motor Driven.

Class 4. Air Compressor; Combination - Small Equipment Operator; Directional Boring Machine; Generators; Heaters, Mechanical; Hydraulic Power Unit (Pile Driving, Extracting, or Drilling); Light Plants, All (1 through 5); Pumps, over 3" (1 to 3 not to exceed a total of 300 ft.); Pumps, Well Points; Vacuum Trucks (excluding hose work); Welding Machines (2 through 5); Winches, 4 Small Electric Drill Winches.

Class 5. SkidSteer Loader (all); Brick Forklifts; Oilers.

Class 6. Field Mechanics and Field Welders

Class 7. Dowell Machine with Air Compressor; Gradall and machines of like nature.

OPERATING ENGINEER - FLOATING

Class 1. Craft Foreman; Master Mechanic; Diver/Wet Tender; Engineer; Engineer (Hydraulic Dredge).

Class 2. Crane/Backhoe Operator; Boat Operator with towing endorsement; Mechanic/Welder; Assistant Engineer (Hydraulic Dredge); Leverman (Hydraulic Dredge); Diver Tender.

Class 3. Deck Equipment Operator, Machineryman, Maintenance of Crane (over 50 ton capacity) or Backhoe (115,000 lbs. or more); Tug/Launch Operator; Loader/Dozer and like equipment on Barge, Breakwater Wall, Slip/Dock, or Scow, Deck Machinery, etc.

Class 4. Deck Equipment Operator, Machineryman/Fireman (4 Equipment Units or More); Off Road Trucks; Deck Hand, Tug Engineer, Crane Maintenance (50 Ton Capacity and Under) or Backhoe Weighing (115,000 pounds or less); Assistant Tug Operator.

Class 5. Friction or Lattice Boom Cranes.

Class 6. ROV Pilot, ROV Tender

SURVEY WORKER - Operated survey equipment including data collectors, G.P.S. and robotic instruments, as well as conventional levels and transits.

TRAFFIC SAFETY - work associated with barricades, horses and drums used to reduce lane usage on highway work, the installation and removal of temporary lane markings, and the installation and removal of temporary road signs.

TRUCK DRIVER - BUILDING, HEAVY AND HIGHWAY CONSTRUCTION

Class 1. Two or three Axle Trucks. A-frame Truck when used for transportation purposes; Air Compressors and Welding Machines, including those pulled by cars, pick-up trucks and tractors; Ambulances; Batch Gate Lockers; Batch Hopperman; Car and Truck Washers; Carry-alls; Fork Lifts and Hoisters; Helpers; Mechanics Helpers and Greasers; Oil Distributors 2-man operation; Pavement Breakers; Pole Trailer, up to 40 feet; Power Mower Tractors; Self-propelled Chip Spreader; Skipman; Slurry Trucks, 2-man operation; Slurry Truck Conveyor Operation, 2 or 3 man; Teamsters; Unskilled Dumpman; and Truck Drivers hauling warning lights, barricades, and portable toilets on the job site.

Class 2. Four axle trucks; Dump Crets and Adgetors under 7 yards; Dumpsters, Track Trucks, Euclids, Hug Bottom Dump Turnapulls or Turnatrailers when pulling other than self-loading equipment or similar equipment under 16 cubic yards; Mixer Trucks under 7 yards; Ready-mix Plant Hopper Operator, and Winch Trucks, 2 Axles.

Class 3. Five axle trucks; Dump Crets and Adgetors 7 yards and over; Dumpsters, Track Trucks, Euclids, Hug Bottom Dump Turnatrailers or turnapulls when pulling other than self-loading equipment or similar equipment over 16 cubic yards; Explosives and/or Fission Material Trucks; Mixer Trucks 7 yards or over; Mobile Cranes while in transit; Oil Distributors, 1-man operation; Pole Trailer, over 40 feet; Pole and Expandable Trailers hauling material over 50 feet long; Slurry trucks, 1-man operation; Winch trucks, 3 axles or more; Mechanic--Truck Welder and Truck Painter.

Class 4. Six axle trucks; Dual-purpose vehicles, such as mounted crane trucks with hoist and accessories; Foreman; Master Mechanic; Self-loading equipment like P.B. and trucks with scoops on the front.

TERRAZZO FINISHER

The handling of sand, cement, marble chips, and all other materials that may be used by the Mosaic Terrazzo Mechanic, and the mixing, grinding, grouting, cleaning and sealing of all Marble, Mosaic, and Terrazzo work, floors, base, stairs, and wainscoting by hand or machine, and in addition, assisting and aiding Marble, Masonic, and Terrazzo Mechanics.

Other Classifications of Work:

For definitions of classifications not otherwise set out, the Department generally has on file such definitions which are available. If a task to be performed is not subject to one of the classifications of pay set out, the Department will upon being contacted state which neighboring county has such a classification and provide such rate, such rate being deemed to exist by reference in this document. If no neighboring county rate applies to the task, the Department shall undertake a special determination, such special determination being then deemed to have existed under this determination. If a project requires these, or any classification not listed, please contact IDOL at 217-782-1710 for wage rates or clarifications.

LANDSCAPING

Landscaping work falls under the existing classifications for laborer, operating engineer and truck driver. The work performed by landscape plantsman and landscape laborer is covered by the existing classification of laborer. The work performed by landscape operators (regardless of equipment used or its size) is covered by the classifications of operating engineer. The work performed by landscape truck drivers (regardless of size of truck driven) is covered by the classifications of truck driver.

MATERIAL TESTER & MATERIAL TESTER/INSPECTOR I AND II

Notwithstanding the difference in the classification title, the classification entitled "Material Tester I" involves the same job duties as the classification entitled "Material Tester/Inspector I". Likewise, the classification entitled "Material Tester II" involves the same job duties as the classification entitled "Material Tester/Inspector II".

CHECK SHEET
FOR
RECURRING SPECIAL PROVISIONS

Adopted April 1, 2016

The following RECURRING SPECIAL PROVISIONS indicated by an "X" are applicable to this contract and are included by reference:

RECURRING SPECIAL PROVISIONS

CHECK SHEET #			PAGE NO.
1	☐	Additional State Requirements for Federal-Aid Construction Contracts	1
2	☐	Subletting of Contracts (Federal-Aid Contracts)	4
3	☐	EEO	5
4	☐	Specific EEO Responsibilities Non Federal-Aid Contracts	15
5	☐	Required Provisions - State Contracts	20
6	☐	Asbestos Bearing Pad Removal	26
7	☐	Asbestos Waterproofing Membrane and Asbestos Hot-Mix Asphalt Surface Removal	27
8	☐	Temporary Stream Crossings and In-Stream Work Pads	28
9	☐	Construction Layout Stakes Except for Bridges	29
10	☐	Construction Layout Stakes	32
11	☐	Use of Geotextile Fabric for Railroad Crossing	35
12	☐	Subsealing of Concrete Pavements	37
13	☐	Hot-Mix Asphalt Surface Correction	41
14	☐	Pavement and Shoulder Resurfacing	43
15	☐	Patching with Hot-Mix Asphalt Overlay Removal	44
16	☐	Polymer Concrete	45
17	☐	PVC Pipeliner	47
18	☐	Bicycle Racks	48
19	☐	Temporary Portable Bridge Traffic Signals	50
20	☐	Work Zone Public Information Signs	52
21	☐	Nighttime Inspection of Roadway Lighting	53
22	☐	English Substitution of Metric Bolts	54
23	☐	Calcium Chloride Accelerator for Portland Cement Concrete	55
24	☐	Quality Control of Concrete Mixtures at the Plant	56
25	☐	Quality Control/Quality Assurance of Concrete Mixtures	64
26	☐	Digital Terrain Modeling for Earthwork Calculations	80
27	☐	Pavement Marking Removal	82
28	☐	Preventive Maintenance – Bituminous Surface Treatment	83
29	☐	Preventive Maintenance – Cape Seal	89
30	☐	Preventive Maintenance – Micro-Surfacing	104
31	☐	Preventive Maintenance – Slurry Seal	115
32	☐	Temporary Raised Pavement Markers	125
33	☐	Restoring Bridge Approach Pavements Using High-Density Foam	126

Revised 10/14/14

CHECK SHEET
FOR
LOCAL ROADS AND STREETS RECURRING SPECIAL PROVISIONS

Adopted April 1, 2016

The following RECURRING SPECIAL PROVISIONS indicated by an "X" are applicable to this contract and are included by reference:

LOCAL ROADS AND STREETS RECURRING SPECIAL PROVISIONS

CHECK SHEET #			PAGE NO.
1		**Reserved**	130
2	☐	Furnished Excavation	131
3	☒	Work Zone Traffic Control Surveillance	132
4	☐	Flaggers in Work Zones	133
5	☒	Contract Claims	134
6	☒	Bidding Requirements and Conditions for Contract Proposals	135
7	☐	Bidding Requirements and Conditions for Material Proposals	141
8		**Reserved**	147
9	☐	Bituminous Surface Treatments	148
10		**Reserved**	149
11	☒	Employment Practices	150
12	☒	Wages of Employees on Public Works	152
13	☒	Selection of Labor	154
14	☐	Paving Brick and Concrete Paver Pavements and Sidewalks	155
15	☒	Partial Payments	158
16	☒	Protests on Local Lettings	159
17	☒	Substance Abuse Prevention Program	160
18	☐	Multigrade Cold Mix Asphalt	161

ERRATA FOR THE 2016 STANDARD SPECIFICATIONS (BDE)

Effective: April 1, 2016

Page 84 Article 204.02. In the seventh line of the first paragraph change “AASHTO T 99 (Method C)” to “Illinois Modified AASHTO T 99 (Method C)”.

Page 90 Article 205.06. In the first sentence of the third paragraph change “AASHTO T 99 (Method C)” to “Illinois Modified AASHTO T 99 (Method C)”.

Page 91 Article 205.06. In the first sentence of the fourth paragraph change “AASHTO T 99 (Method C)” to “Illinois Modified AASHTO T 99 (Method C)”, and in the second sentence change “AASHTO T 224” to “Illinois Modified AASHTO T 99 (Annex A1)”.

Page 91 Article 205.06. In the second line of the fifth paragraph change “AASHTO T 191” to “Illinois Modified AASHTO T 191”.

Page 91 Article 205.06. In the sixth line of the eighth paragraph change “AASHTO T 99 (Method C)” to “Illinois Modified AASHTO T 99 (Method C)”.

Page 148 Article 302.09. In the second sentence of the fifth paragraph change “AASHTO T 191” to “Illinois Modified AASHTO T 191”, and in the third sentence change “AASHTO T 99” to “Illinois Modified AASHTO T 99”.

Page 152 Article 310.09. In the second sentence of the second paragraph change “AASHTO T 191” to “Illinois Modified AASHTO T 191”, and in the third sentence change “AASHTO T 99” to “Illinois Modified AASHTO T 99”.

Page 155 Article 311.05(a). In the first sentence of the fifth paragraph change “AASHTO T 99 (Method C)” to “Illinois Modified AASHTO T 99 (Method C)”, and in the second sentence change “AASHTO T 224” to “Illinois Modified AASHTO T 99 (Annex A1)”.

Page 155 Article 311.05(a). In the second line of the sixth paragraph change “AASHTO T 191” to “Illinois Modified AASHTO T 191”.

Page 163 Article 351.05(a). In the second sentence of the fifth paragraph change “AASHTO T 99 (Method C)” to “Illinois Modified AASHTO T 99 (Method C)”, and in the third sentence change “AASHTO T 224” to “Illinois Modified AASHTO T 99 (Annex A1)”.

Page 163 Article 351.05(a). In the second line of the sixth paragraph change “AASHTO T 191” to “Illinois Modified AASHTO T 191”.

Page 169 Article 352.11. In the second sentence of the fourth paragraph change “AASHTO T 191” to “Illinois Modified AASHTO T 191”, and in the third sentence change “AASHTO T 134 (Method B)” to “Illinois Modified AASHTO T 134 (Method B)”.

Page 169 Article 352.12. In the first sentence of the first paragraph change “AASHTO T 22” to “Illinois Modified AASHTO T 22”, and in the second sentence change “AASHTO T 134 (Method B)” to “Illinois Modified AASHTO T 134 (Method B)”.

Page 196 Article 406.07(a). After the footnotes in Table 1 - Minimum Roller Requirements for HMA add the following:

“<u>EQUIPMENT DEFINITION</u>

V_s - Vibratory roller, static mode, minimum 125 lb/in. (2.2 kg/mm) of roller width. Maximum speed = 3 mph (5 km/h) or 264 ft/min (80 m/min). If the vibratory roller does not eliminate roller marks, its use shall be discontinued and a tandem roller, adequately ballasted to remove roller marks, shall be used.

V_D - Vibratory roller, dynamic mode, operated at a speed to produce not less than 10 impacts/ft (30 impacts/m).

P - Pneumatic-tired roller, max. speed 3 1/2 mph (5.5 km/h) or 308 ft/min (92 m/min). The pneumatic-tired roller shall have a minimum tire pressure of 80 psi (550 kPa) and shall be equipped with heat retention shields. The self-propelled pneumatic-tired roller shall develop a compression of not less than 300 lb (53 N) nor more than 500 lb (88 N) per in. (mm) of width of the tire tread in contact with the HMA surface.

T_B - Tandem roller for breakdown rolling, 8 to 12 tons (7 to 11 metric tons), 250 to 400 lb/in. (44 to 70 N/mm) of roller width, max. speed = 3 1/2 mph (5.5 km/h) or 308 ft/min (92 m/min).

T_F - Tandem roller for final rolling, 200 to 400 lb/in. (35 to 70 N/mm) of roller width with minimum roller width of 50 in. (1.25 m). Ballast shall be increased if roller marks are not eliminated. Ballast shall be decreased if the mat shoves or distorts.

3W - Three wheel roller, max. speed = 3 mph (5 km/h) or 264 ft/min (80 m/min), 300 to 400 lb/in. (53 to 70 N/mm) of roller width. The three-wheel roller shall weigh 10 to 12 tons (9 to 11 metric tons).”

Page 331 Article 505.04(p). Under Range of Clearance in the first table change “in. x 10^{-6}” to “in. x 10^{-3}”.

Page 444 Article 542.03. In the Notes in Table IIIB add “CPP Corrugated Polypropylene (CPP) pipe with smooth interior”.

Page 445 Article 542.03. In the fourth column in Table IIIB (metric) change the heading for Type 5 pipe from “CPE” to “CPP”.

Page 445 Article 542.03. In the Notes in Table IIIB (metric) change “PE Polyethylene (PE) pipe with a smooth interior” to “CPP Corrugated Polypropylene (CPP) pipe with smooth interior”.

Page 449 Article 542.04(f)(2). In the third line of the second paragraph change “AASHTO T 99 (Method C)” to “Illinois Modified AASHTO T 99 (Method C)”.

Page 544 Article 639.03. In the first sentence of the first paragraph change “AASHTO Standard Specifications for Structural Supports for Highway Signs, Luminaires, Traffic Signals,” to “AASHTO “LRFD Specifications for Structural Supports for Highway Signs, Luminaires, and Traffic Signals,””.

Page 546 Article 640.03. In the first sentence of the first paragraph change “AASHTO Standard Specifications for Structural Supports for Highway Signs, Luminaires, and Traffic Signals” to “AASHTO “LRFD Specifications for Structural Supports for Highway Signs, Luminaires, and Traffic Signals””.

Page 548 Article 641.03. In the first sentence of the first paragraph change “AASHTO Standard Specifications for Structural Supports for Highway Signs, Luminaire and Traffic Signals,” to “AASHTO “LRFD Specifications for Structural Supports for Highway Signs, Luminaires, and Traffic Signals,””.

Page 621 Article 727.03. In the first sentence of the third paragraph change “AASHTO Standard Specifications for Structural Supports for Highway Signs, Luminaires and Traffic Signals” to “AASHTO “LRFD Specifications for Structural Supports for Highway Signs, Luminaires, and Traffic Signals””.

Page 629 Article 734.03(a). In the fourth line of the second paragraph change “AASHTO T 99 (Method C)” to “Illinois Modified AASHTO T 99 (Method C)”.

Page 649 Article 801.02. In the first sentence of the first paragraph change “AASHTO’s Standard Specifications for Structural Supports for Highway Signs, Luminaires, and Traffic Signals” to “AASHTO “LRFD Specifications for Structural Supports for Highway Signs, Luminaires, and Traffic Signals””.

Page 742 Article 1003.04(c). Under Gradation in the table change “(see Article 1003.02(c))” to “(see Article 1003.01(c))”.

Page 755 Article 1004.03(b). Revise the third sentence of the first paragraph to read “For Class A (seal or cover coat), and other binder courses, the coarse aggregate shall be Class C quality or better.”.

Page 809 Article 1020.04(e). In the third line of the first paragraph change “ITP SCC-3” to “ITP SCC-4”.

Page 945 Article 1069.05. In the first sentence of the tenth paragraph change ““Standard Specifications for Structural Supports for Highway Signs, Luminaires, and Traffic Signals”” to “AASHTO “LRFD Specifications for Structural Supports for Highway Signs, Luminaires, and Traffic Signals””.

Page 961 Article 1070.04(b)(1). In the third sentence of the first paragraph change ““Standard Specifications of Structural Supports for Highway Signs, Luminaires and Traffic Signals” published by AASHTO” to “AASHTO “LRFD Specifications for Structural Supports for Highway Signs, Luminaires, and Traffic Signals””.

Page 989 Article 1077.01. In the second sentence of the first paragraph change “Standard Specifications for Structural Supports for Highway Signs, Luminaires, and Traffic Signals, as published by AASHTO” to “AASHTO “LRFD Specifications for Structural Supports for Highway Signs, Luminaires, and Traffic Signals””.

Page 1121 Article 1103.13(a). In the first line of the first paragraph change “Bridge Deck Approach Slabs.” to “Bridge Deck and Approach Slabs.”.

80364

FRICTION AGGREGATE (D-1)

Effective: January 1, 2011
Revised: July 24, 2015

Revise Article 1004.01(a)(4) of the Standard Specifications to read:

"(4) Crushed Stone. Crushed stone shall be the angular fragments resulting from crushing undisturbed, consolidated deposits of rock by mechanical means. Crushed stone shall be divided into the following, when specified.

a. Carbonate Crushed Stone. Carbonate crushed stone shall be either dolomite or limestone. Dolomite shall contain 11.0 percent or more magnesium oxide (MgO). Limestone shall contain less than 11.0 percent magnesium oxide (MgO).

b. Crystalline Crushed Stone. Crystalline crushed stone shall be either metamorphic or igneous stone, including but is not limited to, quartzite, granite, rhyolite and diabase."

Revise Article 1004.03(a) of the Standard Specifications to read:

"**1004.03 Coarse Aggregate for Hot-Mix Asphalt (HMA).** The aggregate shall be according to Article 1004.01 and the following.

(a) Description. The coarse aggregate for HMA shall be according to the following table.

Use	Mixture	Aggregates Allowed
Class A	Seal or Cover	Allowed Alone or in Combination [5/]: Gravel Crushed Gravel Carbonate Crushed Stone Crystalline Crushed Stone Crushed Sandstone Crushed Slag (ACBF) Crushed Steel Slag Crushed Concrete
HMA Low ESAL	Stabilized Subbase or Shoulders	Allowed Alone or in Combination [5/]: Gravel Crushed Gravel Carbonate Crushed Stone Crystalline Crushed Stone Crushed Sandstone Crushed Slag (ACBF) Crushed Steel Slag[1/] Crushed Concrete
HMA High ESAL Low ESAL	Binder IL-19.0 or IL-19.0L SMA Binder	Allowed Alone or in Combination [5/]: Crushed Gravel Carbonate Crushed Stone[2/] Crystalline Crushed Stone Crushed Sandstone Crushed Slag (ACBF) Crushed Concrete[3/]
HMA High ESAL Low ESAL	C Surface and Leveling Binder IL-9.5 or IL-9.5L SMA Ndesign 50 Surface	Allowed Alone or in Combination [5/]: Crushed Gravel Carbonate Crushed Stone[2/] Crystalline Crushed Stone Crushed Sandstone Crushed Slag (ACBF) Crushed Steel Slag[4/] Crushed Concrete[3/]

Use	Mixture	Aggregates Allowed	
HMA High ESAL	D Surface and Leveling Binder IL-9.5 SMA Ndesign 50 Surface	<u>Allowed Alone or in Combination</u> [5/]: Crushed Gravel Carbonate Crushed Stone (other than Limestone)[2/] Crystalline Crushed Stone Crushed Sandstone Crushed Slag (ACBF) Crushed Steel Slag[4/] Crushed Concrete[3/]	
		<u>Other Combinations Allowed:</u>	
		Up to...	*With...*
		25% Limestone	Dolomite
		50% Limestone	Any Mixture D aggregate other than Dolomite
		75% Limestone	Crushed Slag (ACBF) or Crushed Sandstone
HMA High ESAL	E Surface IL-9.5 SMA Ndesign 80 Surface	<u>Allowed Alone or in Combination</u> [5/]: Crystalline Crushed Stone Crushed Sandstone Crushed Slag (ACBF) Crushed Steel Slag No Limestone.	
		<u>Other Combinations Allowed:</u>	
		Up to...	*With...*
		50% Dolomite[2/]	Any Mixture E aggregate
		75% Dolomite[2/]	Crushed Sandstone, Crushed Slag (ACBF), Crushed Steel Slag, or Crystalline Crushed Stone

Use	Mixture	Aggregates Allowed	
		75% Crushed Gravel[2/] or Crushed Concrete[3/]	Crushed Sandstone, Crystalline Crushed Stone, Crushed Slag (ACBF), or Crushed Steel Slag
HMA High ESAL	F Surface IL-9.5 SMA Ndesign 80 Surface	<u>Allowed Alone or in Combination</u> [5/]: Crystalline Crushed Stone Crushed Sandstone Crushed Slag (ACBF) Crushed Steel Slag No Limestone.	
		<u>Other Combinations Allowed</u>:	
		Up to...	*With...*
		50% Crushed Gravel[2/], Crushed Concrete[3/], or Dolomite[2/]	Crushed Sandstone, Crushed Slag (ACBF), Crushed Steel Slag, or Crystalline Crushed Stone

1/ Crushed steel slag allowed in shoulder surface only.
2/ Carbonate crushed stone and/or crushed gravel shall not be used in SMA Ndesign 80. In SMA Ndesign 50, carbonate crushed stone shall not be blended with any of the other aggregates allowed alone in Ndesign 50 SMA binder or Ndesign 50 SMA surface.
3/ Crushed concrete will not be permitted in SMA mixes.
4/ Crushed steel slag shall not be used as leveling binder.
5/ When combinations of aggregates are used, the blend percent measurements shall be by volume."

HMA MIXTURE DESIGN REQUIREMENTS (D-1)

Effective: January 1, 2013
Revised: November 1, 2014

1) Design Composition and Volumetric Requirements

Revise the last sentence of the first paragraph of Article 312.05 of the Standard Specifications to read:

"The minimum compacted thickness of each lift shall be according to Article 406.06(d)."

Delete the minimum compacted lift thickness table in Article 312.05 of the Standard Specifications.

Revise the second paragraph of Article 355.02 of the Standard Specifications to read:

"The mixture composition used shall be IL-19.0."

Revise Article 355.05(a) of the Standard Specifications to read:
"(a) The top lift thickness shall be 2 1/4 in. (60 mm) for mixture composition IL-19.0."

Revise the Leveling Binder table and second paragraph of Article 406.05(c) of the Standard Specifications to read:

"Leveling Binder	
Nominal, Compacted, Leveling Binder Thickness, in. (mm)	Mixture Composition
≤ 1 1/4 (32)	IL-4.75, IL-9.5, or IL-9.5L
> 1 1/4 to 2 (32 to 50)	IL-9.5 or IL-9.5L

The density requirements of Article 406.07(c) shall apply for leveling binder, machine method, when the nominal compacted thickness is: 3/4 in. (19 mm) or greater for IL-4.75 mixtures; and 1 1/4 in. (32 mm) or greater for IL-9.5 and IL-9.5L mixtures."

Revise the table in Article 406.06(d) of the Standard Specifications to read:

"MINIMUM COMPACTED LIFT THICKNESS	
Mixture Composition	Thickness, in. (mm)
IL-4.75	3/4 (19)
SMA-9.5, IL-9.5, IL-9.5L	1 1/2 (38)
SMA-12.5	2 (50)
IL-19.0, IL-19.0L	2 1/4 (57)"

Revise the ninth paragraph of Article 406.14 of the Standard Specifications to read:
"Test strip mixture will be evaluated at the contract unit price according to the following."

Revise Article 406.14(a) of the Standard Specifications to read:

"(a) If the HMA placed during the initial test strip is determined to be acceptable the mixture will be paid for at the contract unit price."

Revise Article 406.14(b) of the Standard Specifications to read:

"(b) If the HMA placed during the initial test strip (1) is determined to be unacceptable to remain in place by the Engineer, and (2) was not produced within 2.0 to 6.0 percent air voids or within the individual control limits of the JMF according to the Department's test results, the mixture will not be paid for and shall be removed at the Contractor's expense. An additional test strip shall be constructed and the mixture will be paid for in full, if produced within 2.0 to 6.0 percent air voids and within the individual control limits of the JMF."

Revise Article 406.14(c) of the Standard Specifications to read:

"(c) If the HMA placed during the initial test strip (1) is determined to be unacceptable to remain in place by the Engineer, and (2) was produced within 2.0 to 6.0 percent air voids and within the individual control limits of the JMF according to the Department's test results, the mixture shall be removed. Removal will be paid according to Article 109.04. This initial mixture will be paid for at the contract unit price. An additional test strip shall be constructed and the mixture will be paid for in full, if produced within 2.0 to 6.0 percent air voids and within the individual control limits of the JMF."

Delete Article 406.14(d) of the Standard Specifications.

Delete Article 406.14(e) of the Standard Specifications.

Delete the last sentence of Article 407.06(c) of the Standard Specifications.

Revise Note 2. of Article 442.02 of the Standard Specifications to read:

"Note 2. The mixture composition of the HMA used shall be IL-19.0 binder, designed with the same Ndesign as that specified for the mainline pavement."

Delete the second paragraph of Article 482.02 of the Standard Specifications.

Revise the first sentence of the sixth paragraph of Article 482.05 of the Standard Specifications to read:

"When the mainline HMA binder and surface course mixture option is used on resurfacing projects, shoulder resurfacing widths of 6 ft (1.8 m) or less may be placed simultaneously with the adjacent traffic lane for both the binder and surface courses."

Revise the second sentence of the fourth paragraph of Article 601.04 of the Standard Specifications to read:

"The top 5 in. (125 mm) of the trench shall be backfilled with an IL-19.0L Low ESAL mixture meeting the requirements of Section 1030 and compacted to a density of not less than 90 percent of the theoretical density."

Revise the second sentence of the fifth paragraph of Article 601.04 of the Standard Specifications to read:

"The top 8 in. (200 mm) of the trench shall be backfilled with an IL-19.0L Low ESAL mixture meeting the requirements of Section 1030 and compacted to a density of not less than 90 percent of the theoretical density."

Revise Article 1003.03(c) of the Standard Specifications to read:

"(c) Gradation. The fine aggregate gradation for all HMA shall be FA 1, FA 2, FA 20, FA 21, or FA 22. The fine aggregate gradation for SMA shall be FA/FM 20.

For mixture IL-4.75 and surface mixtures with an Ndesign = 90, at least 50 percent of the required fine aggregate fraction shall consist of either stone sand, slag sand, or steel slag meeting the FA 20 gradation.

For mixture IL-19.0, Ndesign = 90 the fine aggregate fraction shall consist of at least 67 percent manufactured sand meeting FA 20 or FA 22 gradation. For mixture IL-19.0, Ndesign = 50 or 70 the fine aggregate fraction shall consist of at least 50 percent manufactured sand meeting FA 20 or FA 22 gradation. The manufactured sand shall be stone sand, slag sand, steel slag sand, or combinations thereof.

Gradation FA 1, FA 2, or FA 3 shall be used when required for prime coat aggregate application for HMA."

Delete the last sentence of the first paragraph of Article 1004.03(b) of the Standard Specifications.

Revise the table in Article 1004.03(c) of the Standard Specifications to read:

"Use	Size/Application	Gradation No.
Class A-1, 2, & 3	3/8 in. (10 mm) Seal	CA 16
Class A-1	1/2 in. (13 mm) Seal	CA 15
Class A-2 & 3	Cover	CA 14
HMA High ESAL	IL-19.0 IL-9.5	CA 11 1/ CA 16, CA 13 3/
HMA Low ESAL	IL-19.0L IL-9.5L Stabilized Subbase or Shoulders	CA 11 1/ CA 16
SMA 2/	1/2 in. (12.5mm) Binder & Surface IL 9.5 Surface	CA13 3/, CA14 or CA16 CA16, CA 13 3/

1/ CA 16 or CA 13 may be blended with the gradations listed.
2/ The coarse aggregates used shall be capable of being combined with stone sand, slag sand, or steel slag sand meeting the FA/FM 20 gradation and mineral filler to meet the approved mix design and the mix requirements noted herein.
3/ CA 13 shall be 100 percent passing the 1/2 in. (12.5mm) sieve.

Revise Article 1004.03(e) of the Supplemental Specifications to read:

"(e) Absorption. For SMA the coarse aggregate shall also have water absorption ≤ 2.0 percent."

Revise the nomenclature table in Article 1030.01 of the Standard Specifications to read:

"High ESAL	IL-19.0 binder; IL-9.5 surface; IL-4.75; SMA-12.5, SMA-9.5
Low ESAL	IL-19.0L binder; IL-9.5L surface; Stabilized Subbase (HMA) 1/; HMA Shoulders 2/

1/ Uses 19.0L binder mix.

2/ Uses 19.0L for lower lifts and 9.5L for surface lift."

Revise Article 1030.02 of the Standard Specifications and Supplemental Specifications to read:

"**1030.02 Materials.** Materials shall be according to the following.

Item	Article/Section
(a) Coarse Aggregate	1004.03
(b) Fine Aggregate	1003.03
(c) RAP Material	1031
(d) Mineral Filler	1011
(e) Hydrated Lime	1012.01
(f) Slaked Quicklime (Note 1)	
(g) Performance Graded Asphalt Binder (Note 2)	1032
(h) Fibers (Note 3)	
(i) Warm Mix Asphalt (WMA) Technologies (Note 4)	

Note 1. Slaked quicklime shall be according to ASTM C 5.

Note 2. The asphalt binder shall be an SBS PG 76-28 when the SMA is used on a full-depth asphalt pavement and SBS PG 76-22 when used as an overlay, except where modified herein. The asphalt binder shall be an Elvaloy or SBS PG 76-22 for IL-4.75, except where modified herein. The elastic recovery shall be a minimum of 80.

Note 3. A stabilizing additive such as cellulose or mineral fiber shall be added to the SMA mixture according to Illinois Modified AASHTO M 325. The stabilizing additive shall meet the Fiber Quality Requirements listed in Illinois Modified AASHTO M 325. Prior to approval and use of fibers, the Contractor shall submit a notarized certification by the producer of these materials stating they meet these requirements. Reclaimed Asphalt Shingles (RAS) may be used in Stone Matrix Asphalt (SMA) mixtures designed with an SBA polymer modifier as a fiber additive if the mix design with RAS included meets AASHTO T305 requirements. The RAS shall be from a certified source that produces either Type I or Type 2. Material shall meet requirements noted herein and the actual dosage rate will be determined by the Engineer.

Note 4. Warm mix additives or foaming processes shall be selected from the current Bureau of Materials and Physical Research Approved List, "Warm Mix Asphalt Technologies"."

Revise Article 1030.04(a)(1) of the Standard Specifications and the Supplemental Specifications to read:

"(1) High ESAL Mixtures. The Job Mix Formula (JMF) shall fall within the following limits.

High ESAL, MIXTURE COMPOSITION (% PASSING) 1/										
Sieve Size	IL-19.0 mm		SMA 4/ IL-12.5 mm		SMA 4/ IL-9.5 mm		IL-9.5 mm		IL-4.75 mm	
	min	max	min	max	min	max	min	max	min	max
1 1/2 in (37.5 mm)										
1 in. (25 mm)		100								
3/4 in. (19 mm)	90	100		100						
1/2 in. (12.5 mm)	75	89	80	100		100		100		100
3/8 in. (9.5 mm)				65	90	100	90	100		100
#4 (4.75 mm)	40	60	20	30	36	50	34	69	90	100
#8 (2.36 mm)	20	42	16	24 5/	16	32 5/	34 6/	52 2/	70	90
#16 (1.18 mm)	15	30					10	32	50	65
#30 (600 µm)			12	16	12	18				
#50 (300 µm)	6	15					4	15	15	30
#100 (150 µm)	4	9					3	10	10	18
#200 (75 µm)	3	6	7.0	9.0 3/	7.5	9.5 3/	4	6	7	9 3/
Ratio Dust/Asphalt Binder		1.0		1.5		1.5		1.0		1.0

1/ Based on percent of total aggregate weight.

2/ The mixture composition shall not exceed 44 percent passing the #8 (2.36 mm) sieve for surface courses with Ndesign = 90.

3/ Additional minus No. 200 (0.075 mm) material required by the mix design shall be mineral filler, unless otherwise approved by the Engineer.

4/ The maximum percent passing the #635 (20 µm) sieve shall be ≤ 3 percent.

5/ When establishing the Adjusted Job Mix Formula (AJMF) the percent passing the #8 (2.36 mm) sieve shall not be adjusted above the percentage stated on the table.

6/ When establishing the Adjusted Job Mix Formula (AJMF) the percent passing the #8 (2.36 mm) sieve shall not be adjusted below 34 percent.

Delete Article 1030.04(a)(3) of the Standard Specifications.

Delete Article 1030.04(a)(4) of the Standard Specifications.

Revise Article 1030.04(b)(1) of the Standard Specifications to read:

"(1) High ESAL Mixtures. The target value for the air voids of the HMA shall be 4.0 percent and for IL-4.75 it shall be 3.5 percent at the design number of gyrations. The VMA and VFA of the HMA design shall be based on the nominal maximum size of the aggregate in the mix, and shall conform to the following requirements.

VOLUMETRIC REQUIREMENTS High ESAL				
	Voids in the Mineral Aggregate (VMA), % minimum			Voids Filled with Asphalt Binder (VFA), %
Ndesign	IL-19.0	IL-9.5	IL-4.75[1/]	
50	13.5	15.0	18.5	65 – 78 [2/]
70				65 - 75
90				

1/ Maximum Draindown for IL-4.75 shall be 0.3 percent

2/ VFA for IL-4.75 shall be 72-85 percent"

Revise the table in Article 1030.04(b)(2) of the Standard Specifications to read:

"VOLUMETRIC REQUIREMENTS Low ESAL				
Mixture Composition	Design Compactive Effort	Design Air Voids Target %	VMA (Voids in the Mineral Aggregate), % min.	VFA (Voids Filled with Asphalt Binder), %
IL-9.5L	N_{DES} =30	4.0	15.0	65-78
IL-19.0L	N_{DES} =30	4.0	13.5	N/A"

Replace Article 1030.04(b)(3) of the Standard Specifications with the following:

"(3) SMA Mixtures.

Volumetric Requirements SMA 1/			
Ndesign	Design Air Voids Target %	Voids in the Mineral Aggregate (VMA), % min.	Voids Filled with Asphalt (VFA), %
80 4/	3.5	17.0 2/	75 - 83
		16.0 3/	

1/ Maximum draindown shall be 0.3 percent. The draindown shall be determined at the JMF asphalt binder content at the mixing temperature plus 30 °F.

2/ Applies when specific gravity of coarse aggregate is ≥ 2.760.

3/ Applies when specific gravity of coarse aggregate is < 2.760.

4/ Blending of different types of aggregate will not be permitted.
For surface course, the coarse aggregate can be crushed steel slag, crystalline crushed stone or crushed sandstone. For binder course, coarse aggregate shall be crushed stone (dolomite), crushed gravel, crystalline crushed stone, or crushed sandstone.

Delete Article 1030.04(b)(4) of the Standard Specifications.

Delete Article 1030.04(b)(5) from the Supplemental Specifications.

Delete last sentence of the second paragraph of Article 1102.01(a) (13) a.

Add to second paragraph in Article 1102.01 (a) (13) a.:

"As an option, collected bag-house dust may be used in lieu of manufactured mineral filler, provided; 1) there is enough available for the production of the SMA mix for the entire project and 2) a mix design was prepared with collected bag-house dust."

Revise the table in Article 1030.05(d)(2)a. of the Standard Specifications to read:

"Parameter	Frequency of Tests High ESAL Mixture Low ESAL Mixture	Test Method See Manual of Test Procedures for Materials
Aggregate Gradation % passing sieves: 1/2 in. (12.5 mm), No. 4 (4.75 mm), No. 8 (2.36 mm), No. 30 (600 µm) No. 200 (75 µm)	1 washed ignition oven test on the mix per half day of production Note 3.	Illinois Procedure
Asphalt Binder Content by Ignition Oven Note 1.	1 per half day of production	Illinois-Modified AASHTO T 308
VMA Note 2.	Day's production ≥ 1200 tons: 1 per half day of production	Illinois-Modified AASHTO R 35
	Day's production < 1200 tons: 1 per half day of production for first 2 days and 1 per day thereafter (first sample of the day)	
Air Voids Bulk Specific Gravity of Gyratory Sample Note 4.	Day's production ≥ 1200 tons: 1 per half day of production	Illinois-Modified AASHTO T 312
	Day's production < 1200 tons: 1 per half day of production for first 2 days and 1 per day thereafter (first sample of the day)	
Maximum Specific Gravity of Mixture	Day's production ≥ 1200 tons: 1 per half day of production	Illinois-Modified AASHTO T 209
	Day's production < 1200 tons: 1 per half day of production for first 2 days and 1 per day thereafter (first sample of the day)	

Note 1. The Engineer may waive the ignition oven requirement for asphalt binder content if the aggregates to be used are known to have ignition asphalt binder content calibration factors which exceed 1.5 percent. If the ignition oven requirement is waived, other Department approved methods shall be used to determine the asphalt binder content.

Note 2. The G_{sb} used in the voids in the mineral aggregate (VMA) calculation shall be the same average G_{sb} value listed in the mix design.

Note 3. The Engineer reserves the right to require additional hot bin gradations for batch plants if control problems are evident.

Note 4. The WMA compaction temperature for mixture volumetric testing shall be 270 ± 5 °F (132 ± 3 °C) for quality control testing. The WMA compaction temperature for quality assurance testing will be 270 ± 5 °F (132 ± 3 °C) if the mixture is not allowed to cool to room temperature. If the mixture is allowed to cool to room temperature, it shall be reheated to standard HMA compaction temperatures."

Revise the table in Article 1030.05(d)(2)b. of the Standard Specifications to read:

"Parameter	High ESAL Mixture Low ESAL Mixture
Ratio Dust/Asphalt Binder	0.6 to 1.2
Moisture	0.3 %"

Revise the Article 1030.05(d)(4) of the Supplemental Specifications to read:

"(4) Control Limits. Target values shall be determined by applying adjustment factors to the AJMF where applicable. The target values shall be plotted on the control charts within the following control limits.

"CONTROL LIMITS						
Parameter	High ESAL		SMA		IL-4.75	
	Individual Test	Moving Avg. of 4	Test	Moving Avg. of 4	Individual Test	Moving Avg. of 4
% Passing: 1/						
1/2 in. (12.5 mm)	± 6 %	± 4 %	± 6 %	± 4 %		
3/8 in. (9.5mm)			± 4 %	± 3 %		
No. 4 (4.75 mm)	± 5 %	± 4 %	± 5 %	± 4 %		
No. 8 (2.36 mm)	± 5 %	± 3 %	± 4 %	± 2 %		
No. 16 (1.18 mm)			± 4 %	± 2 %	± 4 %	± 3 %
No. 30 (600 µm)	± 4 %	± 2.5 %	± 4 %	± 2.5 %		
Total Dust Content No. 200 (75 µm)	± 1.5 %	± 1.0 %			± 1.5 %	± 1.0 %
Asphalt Binder Content	± 0.3 %	± 0.2 %	± 0.2 %	± 0.1 %	± 0.3 %	± 0.2 %
Voids	± 1.2 %	± 1.0 %	± 1.2 %	± 1.0 %	± 1.2 %	± 1.0 %
VMA	-0.7 % 2/	-0.5 % 2/	-0.7 % 2/	-0.5 % 2/	-0.7 % 2/	-0.5 % 2/

1/ Based on washed ignition oven

2/ Allowable limit below minimum design VMA requirement

DENSITY CONTROL LIMITS		
Mixture Composition	Parameter	Individual Test
IL-4.75	Ndesign = 50	93.0 - 97.4 % 1/
IL-9.5	Ndesign = 90	92.0 - 96.0 %
IL-9.5,IL-9.5L	Ndesign < 90	92.5 - 97.4 %
IL-19.0	Ndesign = 90	93.0 - 96.0 %
IL-19.0, IL-19.0L	Ndesign < 90	93.0 2/- 97.4 %
SMA	Ndesign = 80	93.5 - 97.4 %

1/ Density shall be determined by cores or by correlated, approved thin lift nuclear gauge.

2/ 92.0 % when placed as first lift on an unimproved subgrade."

Revise the table in Article 1030.05(d)(5) of the Supplemental Specifications to read:

"CONTROL CHART REQUIREMENTS	High ESAL, Low ESAL, SMA & IL-4.75
Gradation 1/ 3/	% Passing Sieves: 1/2 in. (12.5 mm) 2/ No. 4 (4.75 mm) No. 8 (2.36 mm) No. 30 (600 µm)
Total Dust Content 1/	No. 200 (75 µm)
	Asphalt Binder Content
	Bulk Specific Gravity
	Maximum Specific Gravity of Mixture
	Voids
	Density
	VMA

1/ Based on washed ignition oven.

2/ Does not apply to IL-4.75.

3/ SMA also requires the 3/8 in. (9.5 mm) sieve."

Delete Article 1030.05(d)(6)a.1.(b.) of the Standard Specifications.

Delete Article 1030.06(b) of the Standard Specifications.

Delete Article 1102.01(e) of the Standard Specifications.

2) Design Verification and Production

Description. The following states the requirements for Hamburg Wheel and Tensile Strength testing for High ESAL, IL-4.75, and Stone Matrix Asphalt (SMA) hot-mix asphalt (HMA) mixes during mix design verification and production.

Mix Design Testing. Add the following below the referenced AASHTO standards in Article 1030.04 of the Standard Specifications:

AASHTO T 324 Hamburg Wheel Test

AASHTO T 283 Tensile Strength Test

Add the following to Article 1030.04 of the Standard Specifications:

"(d) Verification Testing. High ESAL, IL-4.75, and SMA mix designs submitted for verification will be tested to ensure that the resulting mix designs will pass the required criteria for the Hamburg Wheel Test (IL mod AASHTO T-324) and the Tensile Strength Test (IL mod AASHTO T-283). The Department will perform a verification test on gyratory specimens compacted by the Contractor. If the mix fails the Department's verification test, the Contractor shall make the necessary changes to the mix and resubmit compacted specimens to the Department for verification. If the mix fails again, the mix design will be rejected.

All new and renewal mix designs will be required to be tested, prior to submittal for Department verification and shall meet the following requirements:

(1) Hamburg Wheel Test criteria. The maximum allowable rut depth shall be 0.5 in. (12.5 mm). The minimum number of wheel passes at the 0.5 in. (12.5 mm) rut depth criteria shall be based on the high temperature binder grade of the mix as specified in the mix requirements table of the plans.

Illinois Modified AASHTO T 324 Requirements [1/]

Asphalt Binder Grade	# Repetitions	Max Rut Depth (mm)
PG 70 -XX (or higher)	20,000	12.5
PG 64 -XX (or lower)	10,000	12.5

1/ When produced at temperatures of 275 ± 5 °F (135 ± 3 °C) or less, loose Warm Mix Asphalt shall be oven aged at 270 ± 5 °F (132 ± 3 °C) for two hours prior to gyratory compaction of Hamburg Wheel specimens.

Note: For SMA Designs (N-80) the maximum rut depth is 6.0 mm at 20,000 repetitions.
For IL 4.75mm Designs (N-50) the maximum rut depth is 9.0mm at 15,000 repetitions.

(2) Tensile Strength Criteria. The minimum allowable conditioned tensile strength shall be 60 psi (415 kPa) for non-polymer modified performance graded (PG) asphalt binder and 80 psi (550 kPa) for polymer modified PG asphalt binder. The maximum allowable unconditioned tensile strength shall be 200 psi (1380 kPa)."

Production Testing. Revise Article 1030.06(a) of the Standard Specifications to read:

"(a) High ESAL, IL-4.75, WMA, and SMA Mixtures. For each contract, a 300 ton (275 metric tons) test strip, except for SMA mixtures it will be 400 ton (363 metric ton), will be required at the beginning of HMA production for each mixture with a quantity of 3000 tons (2750 metric tons) or more according to the Manual of Test Procedures for Materials "Hot Mix Asphalt Test Strip Procedures".

Before start-up, target values shall be determined by applying gradation correction factors to the JMF when applicable. These correction factors shall be determined from previous experience. The target values, when approved by the Engineer, shall be used to control HMA production. Plant settings and control charts shall be set according to target values.

Before constructing the test strip, target values shall be determined by applying gradation correction factors to the JMF when applicable. After any JMF adjustment, the JMF shall become the Adjusted Job Mix Formula (AJMF). Upon completion of the first acceptable test strip, the JMF shall become the AJMF regardless of whether or not the JMF has been adjusted. If an adjustment/plant change is made, the Engineer may require a new test strip to be constructed. If the HMA placed during the initial test strip is determined to be unacceptable to remain in place by the Engineer, it shall be removed and replaced.

The limitations between the JMF and AJMF are as follows.

Parameter	Adjustment
1/2 in. (12.5 mm)	± 5.0 %
No. 4 (4.75 mm)	± 4.0 %
No. 8 (2.36 mm)	± 3.0 %
No. 30 (600 µm)	*
No. 200 (75 µm)	*
Asphalt Binder Content	± 0.3 %

* In no case shall the target for the amount passing be greater than the JMF.

Any adjustments outside the above limitations will require a new mix design.

Mixture sampled to represent the test strip shall include additional material sufficient for the Department to conduct Hamburg Wheel testing according to Illinois Modified AASHTO T324 (approximately 60 lb (27 kg) total).

The Contractor shall immediately cease production upon notification by the Engineer of failing Hamburg Wheel test. All prior produced material may be paved out provided all other mixture criteria is being met. No additional mixture shall be produced until the Engineer receives passing Hamburg Wheel tests.

The Department may conduct additional Hamburg Wheel tests on production material as determined by the Engineer."

Revise the title of Article 1030.06(b) of the Standard Specifications to read:

"(b) Low ESAL Mixtures."

Add the following to Article 1030.06 of the Standard Specifications:

" (c) Hamburg Wheel Test. All HMA mixtures shall be sampled within the first 500 tons (450 metric tons) on the first day of production or during start up with a split reserved for the Department. The mix sample shall be tested according to the Illinois Modified AASHTO T 324 and shall meet the requirements specified herein. Mix production shall not exceed 1500 tons (1350 metric tons) or one day's production, whichever comes first, until the testing is completed and the mixture is found to be in conformance. The requirement to cease mix production may be waived if the plant produced mixture demonstrates conformance prior to start of mix production for a contract.

The Department may conduct additional Hamburg Wheel Tests on production material as determined by the Engineer. If the mixture fails to meet the Hamburg Wheel criteria, no further mixture will be accepted until the Contractor takes such action as is necessary to furnish a mixture meeting the criteria"

The Contractor shall immediately cease production upon notification by the Engineer of failing Hamburg Wheel test. All prior produced material may be paved out provided all other mixture criteria are being met. No additional mixture shall be produced until the Engineer receives passing Hamburg Wheel tests.

Method of Measurement:

Add the following after the fourth paragraph of Article 406.13 (b):

"The plan quantities of SMA mixtures shall be adjusted using the actual approved binder and surface Mix Design's G_{mb}."

Basis of Payment.

Replace the seventh paragraph of Article 406.14 of the Standard Specifications with the following:

"For all mixes designed and verified under the Hamburg Wheel criteria, the cost of furnishing and introducing anti-stripping additives in the HMA will not be paid for separately, but shall be considered as included in the contract unit price of the HMA item involved.

No additional compensation will be awarded to the Contractor because of reduced production rates associated with the addition of the anti-stripping additive."

RECLAIMED ASPHALT PAVEMENT AND RECLAIMED ASPHALT SHINGLES (D-1)

Effective: November 1, 2012
Revise: July 24, 2015

Revise Section 1031 of the Standard Specifications to read:

"SECTION 1031. RECLAIMED ASPHALT PAVEMENT AND RECLAIMED ASPHALT SHINGLES

1031.01 Description. Reclaimed asphalt pavement and reclaimed asphalt shingles shall be according to the following.

(a) Reclaimed Asphalt Pavement (RAP). RAP is the material resulting from cold milling or crushing an existing hot-mix asphalt (HMA) pavement. RAP will be considered processed FRAP after completion of both crushing and screening to size. The Contractor shall supply written documentation that the RAP originated from routes or airfields under federal, state, or local agency jurisdiction.

(b) Reclaimed Asphalt Shingles (RAS). Reclaimed asphalt shingles (RAS). RAS is from the processing and grinding of preconsumer or post-consumer shingles. RAS shall be a clean and uniform material with a maximum of 0.5 percent unacceptable material, as defined in Bureau of Materials and Physical Research Policy Memorandum "Reclaimed Asphalt Shingle (RAS) Sources", by weight of RAS. All RAS used shall come from a Bureau of Materials and Physical Research approved processing facility where it shall be ground and processed to 100 percent passing the 3/8 in. (9.5 mm) sieve and 90 percent passing the #4 (4.75 mm) sieve . RAS shall meet the testing requirements specified herein. In addition, RAS shall meet the following Type 1 or Type 2 requirements.

(1) Type 1. Type 1 RAS shall be processed, preconsumer asphalt shingles salvaged from the manufacture of residential asphalt roofing shingles.

(2) Type 2. Type 2 RAS shall be processed post-consumer shingles only, salvaged from residential, or four unit or less dwellings not subject to the National Emission Standards for Hazardous Air Pollutants (NESHAP).

1031.02 Stockpiles. RAP and RAS stockpiles shall be according to the following.

(a) RAP Stockpiles. The Contractor shall construct individual, sealed RAP stockpiles meeting one of the following definitions. Additional processed RAP (FRAP) shall be stockpiled in a separate working pile, as designated in the QC Plan, and only added to the sealed stockpile when test results for the working pile are complete and are found to meet tolerances specified herein for the original sealed FRAP stockpile. Stockpiles shall be sufficiently separated to prevent intermingling at the base. All stockpiles (including unprocessed RAP and FRAP) shall be identified by signs indicating the type as listed below (i.e. "Non- Quality, FRAP -#4 or Type 2 RAS", etc…).

(1) Fractionated RAP (FRAP). FRAP shall consist of RAP from Class I, Superpave HMA (High and Low ESAL) or equivalent mixtures. The coarse aggregate in FRAP shall be crushed aggregate and may represent more than one aggregate type and/or quality but shall be at least C quality. All FRAP shall be processed prior to testing and sized into fractions with the separation occurring on or between the #4 (4.75 mm) and 1/2 in. (12.5 mm) sieves. Agglomerations shall be minimized such that 100 percent of the RAP in the coarse fraction shall pass the maximum sieve size specified for the mix the FRAP will be used in.

(2) Restricted FRAP (B quality) stockpiles shall consist of RAP from Class I, Superpave (High ESAL), or HMA (High ESAL). If approved by the Engineer, the aggregate from a maximum 3.0 inch single combined pass of surface/binder milling will be classified as B quality. All millings from this application will be processed into FRAP as described previously.

(3) Conglomerate. Conglomerate RAP stockpiles shall consist of RAP from Class I, Superpave HMA (High and Low ESAL) or equivalent mixtures. The coarse aggregate in this RAP shall be crushed aggregate and may represent more than one aggregate type and/or quality but shall be at least C quality. This RAP may have an inconsistent gradation and/or asphalt binder content prior to processing. All conglomerate RAP shall be processed (FRAP) prior to testing. Conglomerate RAP stockpiles shall not contain steel slag or other expansive material as determined by the Department.

(4) Conglomerate "D" Quality (DQ). Conglomerate DQ RAP stockpiles shall consist of RAP from HMA shoulders, bituminous stabilized subbases or Superpave (Low ESAL)/HMA (Low ESAL) IL-19.0L binder mixture. The coarse aggregate in this RAP may be crushed or round but shall be at least D quality. This RAP may have an inconsistent gradation and/or asphalt binder content. Conglomerate DQ RAP stockpiles shall not contain steel slag or other expansive material as determined by the Department.

(5) Non-Quality. RAP stockpiles that do not meet the requirements of the stockpile categories listed above shall be classified as "Non-Quality".

RAP or FRAP containing contaminants, such as earth, brick, sand, concrete, sheet asphalt, bituminous surface treatment (i.e. chip seal), pavement fabric, joint sealants, plant cleanout etc., will be unacceptable unless the contaminants are removed to the satisfaction of the Engineer. Sheet asphalt shall be stockpiled separately.

(b) RAS Stockpiles. Type 1 and Type 2 RAS shall be stockpiled separately and shall be sufficiently separated to prevent intermingling at the base. Each stockpile shall be signed indicating what type of RAS is present.
However, a RAS source may submit a written request to the Department for approval to blend mechanically a specified ratio of type 1 RAS with type 2 RAS. The source will not be permitted to change the ratio of the blend without the Department prior written approval. The Engineer's written approval will be required, to mechanically blend RAS with any fine aggregate produced under the AGCS, up to an equal weight of RAS, to improve workability. The fine aggregate shall be "B Quality" or better from an approved Aggregate Gradation Control System source. The fine aggregate shall be one that is approved for use in the HMA mixture and accounted for in the mix design and during HMA production.

Records identifying the shingle processing facility supplying the RAS, RAS type and lot number shall be maintained by project contract number and kept for a minimum of three years.

1031.03 Testing. FRAP and RAS testing shall be according to the following.

(a) FRAP Testing. When used in HMA, the FRAP shall be sampled and tested either during processing or after stockpiling. It shall also be sampled during HMA production.

(1) During Stockpiling. For testing during stockpiling, washed extraction samples shall be run at the minimum frequency of one sample per 500 tons (450 metric tons) for the first 2000 tons (1800 metric tons) and one sample per 2000 tons (1800 metric tons) thereafter. A minimum of five tests shall be required for stockpiles less than 4000 tons (3600 metric tons).

(2) Incoming Material. For testing as incoming material, washed extraction samples shall be run at a minimum frequency of one sample per 2000 tons (1800 metric tons) or once per week, whichever comes first.

(3) After Stockpiling. For testing after stockpiling, the Contractor shall submit a plan for approval to the District proposing a satisfactory method of sampling and testing the RAP/FRAP pile either in-situ or by restockpiling. The sampling plan shall meet the minimum frequency required above and detail the procedure used to obtain representative samples throughout the pile for testing.

Before extraction, each field sample of FRAP, shall be split to obtain two samples of test sample size. One of the two test samples from the final split shall be labeled and stored for Department use. The Contractor shall extract the other test sample according to Department procedure. The Engineer reserves the right to test any sample (split or Department-taken) to verify Contractor test results.

(b) RAS Testing. RAS shall be sampled and tested during stockpiling according to Bureau of Materials and Physical Research Policy Memorandum, "Reclaimed Asphalt Shingle (RAS) Sources". The Contractor shall also sample as incoming material at the HMA plant.

(1) During Stockpiling. Washed extraction and testing for unacceptable materials shall be run at the minimum frequency of one sample per 200 tons (180 metric tons) for the first 1000 tons (900 metric tons) and one sample per 1000 tons (900 metric tons) thereafter. A minimum of five samples are required for stockpiles less than 1000 tons (900 metric tons). Once a $\leq$ 1000 ton (900 metric ton), five-sample/test stockpile has been established it shall be sealed. Additional incoming RAS shall be in a separate working pile as designated in the Quality Control plan and only added to the sealed stockpile when the test results of the working pile are complete and are found to meet the tolerances specified herein for the original sealed RAS stockpile.

(2) Incoming Material. For testing as incoming material at the HMA plant, washed extraction shall be run at the minimum frequency of one sample per 250 tons (227 metric tons). A minimum of five samples are required for stockpiles less than 1000 tons (900 metric tons). The incoming material test results shall meet the tolerances specified herein.

The Contractor shall obtain and make available all test results from start of the initial stockpile sampled and tested at the shingle processing facility in accordance with the facility's QC Plan.

Before extraction, each field sample shall be split to obtain two samples of test sample size. One of the two test samples from the final split shall be labeled and stored for Department use. The Contractor shall extract the other test sample according to Department procedures. The Engineer reserves the right to test any sample (split or Department-taken) to verify Contractor test results.

1031.04 Evaluation of Tests. Evaluation of tests results shall be according to the following.

(a) Evaluation of FRAP Test Results. All test results shall be compiled to include asphalt binder content, gradation and, when applicable (for slag), G_{mm}. A five test average of results from the original pile will be used in the mix designs. Individual extraction test results run thereafter, shall be compared to the average used for the mix design, and will be accepted if within the tolerances listed below.

Parameter	FRAP
No. 4 (4.75 mm)	± 6 %
No. 8 (2.36 mm)	± 5 %
No. 30 (600 µm)	± 5 %
No. 200 (75 µm)	± 2.0 %
Asphalt Binder	± 0.3 %
G_{mm}	± 0.03 1/

1/ For stockpile with slag or steel slag present as determined in the current Manual of Test Procedures Appendix B 21, "Determination of Reclaimed Asphalt Pavement Aggregate Bulk Specific Gravity".

If any individual sieve and/or asphalt binder content tests are out of the above tolerances when compared to the average used for the mix design, the FRAP stockpile shall not be used in Hot-Mix Asphalt unless the FRAP representing those tests is removed from the stockpile. All test data and acceptance ranges shall be sent to the District for evaluation.

The Contractor shall maintain a representative moving average of five tests to be used for Hot-Mix Asphalt production.

With the approval of the Engineer, the ignition oven may be substituted for extractions according to the Illinois Test Procedure, "Calibration of the Ignition Oven for the Purpose of Characterizing Reclaimed Asphalt Pavement (RAP)" or Illinois Modified AASHTO T-164-11, Test Method A.

(b) Evaluation of RAS Test Results. All of the test results, with the exception of percent unacceptable materials, shall be compiled and averaged for asphalt binder content and gradation. A five test average of results from the original pile will be used in the mix designs. Individual test results run thereafter, when compared to the average used for the mix design, will be accepted if within the tolerances listed below.

Parameter	RAS
No. 8 (2.36 mm)	± 5 %
No. 16 (1.18 mm)	± 5 %
No. 30 (600 µm)	± 4 %
No. 200 (75 µm)	± 2.5 %
Asphalt Binder Content	± 2.0 %

If any individual sieve and/or asphalt binder content tests are out of the above tolerances when compared to the average used for the mix design, the RAS shall not be used in Hot-Mix Asphalt unless the RAS representing those tests is removed from the stockpile. All test data and acceptance ranges shall be sent to the District for evaluation.

(c) Quality Assurance by the Engineer. The Engineer may witness the sampling and splitting conduct assurance tests on split samples taken by the Contractor for quality control testing a minimum of once a month.

The overall testing frequency will be performed over the entire range of Contractor samples for asphalt binder content and gradation. The Engineer may select any or all split samples for assurance testing. The test results will be made available to the Contractor as soon as they become available.

The Engineer will notify the Contractor of observed deficiencies.

Differences between the Contractor's and the Engineer's split sample test results will be considered acceptable if within the following limits.

Test Parameter	Acceptable Limits of Precision	
% Passing:[1/]	FRAP	RAS
1/2 in.	5.0%	
No. 4	5.0%	
No. 8	3.0%	4.0%
No. 30	2.0%	3.0%
No. 200	2.2%	2.5%
Asphalt Binder Content	0.3%	1.0%
G_{mm}	0.030	

1/ Based on washed extraction.

In the event comparisons are outside the above acceptable limits of precision, the Engineer will immediately investigate.

(d) Acceptance by the Engineer. Acceptable of the material will be based on the validation of the Contractor's quality control by the assurance process.

1031.05 Quality Designation of Aggregate in RAP and FRAP.

(a) RAP. The aggregate quality of the RAP for homogenous, conglomerate, and conglomerate "D" quality stockpiles shall be set by the lowest quality of coarse aggregate in the RAP stockpile and are designated as follows.

(1) RAP from Class I, Superpave/HMA (High ESAL), or (Low ESAL) IL-9.5L surface mixtures are designated as containing Class B quality coarse aggregate.

(2) RAP from Superpave/HMA (Low ESAL) IL-19.0L binder mixture is designated as Class D quality coarse aggregate.

(3) RAP from Class I, Superpave/HMA (High ESAL) binder mixtures, bituminous base course mixtures, and bituminous base course widening mixtures are designated as containing Class C quality coarse aggregate.

(4) RAP from bituminous stabilized subbase and BAM shoulders are designated as containing Class D quality coarse aggregate.

(b) FRAP. If the Engineer has documentation of the quality of the FRAP aggregate, the Contractor shall use the assigned quality provided by the Engineer.

If the quality is not known, the quality shall be determined as follows. Fractionated RAP stockpiles containing plus #4 (4.75 mm) sieve coarse aggregate shall have a maximum tonnage of 5,000 tons (4,500 metric tons). The Contractor shall obtain a representative sample witnessed by the Engineer. The sample shall be a minimum of 50 lb (25 kg). The sample shall be extracted according to Illinois Modified AASHTO T 164 by a consultant prequalified by the Department for the specified testing. The consultant shall submit the test results along with the recovered aggregate to the District Office. The cost for this testing shall be paid by the Contractor. The District will forward the sample to the BMPR Aggregate Lab for MicroDeval Testing, according to Illinois Modified AASHTO T 327. A maximum loss of 15.0 percent will be applied for all HMA applications. The fine aggregate portion of the fractionated RAP shall not be used in any HMA mixtures that require a minimum of "B" quality aggregate or better, until the coarse aggregate fraction has been determined to be acceptable thru a MicroDeval Testing.

1031.06 Use of FRAP and/or RAS in HMA. The use of FRAP and/or RAS shall be a Contractor's option when constructing HMA in all contracts.

(a) FRAP. The use of FRAP in HMA shall be as follows.

(1) Coarse Aggregate Size (after extraction). The coarse aggregate in all FRAP shall be equal to or less than the nominal maximum size requirement for the HMA mixture to be produced.

(2) Steel Slag Stockpiles. FRAP stockpiles containing steel slag or other expansive material, as determined by the Department, shall be homogeneous and will be approved for use in HMA (High ESAL and Low ESAL) mixtures regardless of lift or mix type.

(3) Use in HMA Surface Mixtures (High and Low ESAL). FRAP stockpiles for use in HMA surface mixtures (High and Low ESAL) shall have coarse aggregate that is Class B quality or better. FRAP shall be considered equivalent to limestone for frictional considerations unless produced/screened to minus 3/8 inch.

(4) Use in HMA Binder Mixtures (High and Low ESAL), HMA Base Course, and HMA Base Course Widening. FRAP stockpiles for use in HMA binder mixtures (High and Low ESAL), HMA base course, and HMA base course widening shall be FRAP in which the coarse aggregate is Class C quality or better.

(5) Use in Shoulders and Subbase. FRAP stockpiles for use in HMA shoulders and stabilized subbase (HMA) shall be FRAP, Restricted FRAP, conglomerate, or conglomerate DQ.

(b) RAS. RAS meeting Type 1 or Type 2 requirements will be permitted in all HMA applications as specified herein.

(c) FRAP and/or RAS Usage Limits. Type 1 or Type 2 RAS may be used alone or in conjunction with FRAP in HMA mixtures up to a maximum of 5.0% by weight of the total mix.

When FRAP is used alone or FRAP is used in conjunction with RAS, the percent of virgin asphalt binder replacement (ABR) shall not exceed the amounts indicated in the table below for a given N Design.

Max Asphalt Binder Replacement for FRAP with RAS Combination

HMA Mixtures 1/ 2/ 4/	Maximum % ABR		
Ndesign	Binder/Leveling Binder	Surface	Polymer Modified 3/
30L	50	40	30
50	40	35	30
70	40	30	30
90	40	30	30
4.75 mm N-50			40
SMA N-80			30

1/ For HMA “All Other” (shoulder and stabilized subbase) N-30, the percent asphalt binder replacement shall not exceed 50% of the total asphalt binder in the mixture.

2/ When the binder replacement exceeds 15 percent for all mixes, except for SMA and IL-4.75, the high and low virgin asphalt binder grades shall each be reduced by one grade (i.e. 25 percent binder replacement using a virgin asphalt binder grade of PG64-22 will be reduced to a PG58-28). When constructing full depth HMA and the ABR is less than 15 percent, the required virgin asphalt binder grade shall be PG64-28.

3/ When the ABR for SMA or IL-4.75 is 15 percent or less, the required virgin asphalt binder shall be SBS PG76-22 and the elastic recovery shall be a minimum of 80. When the ABR for SMA or IL-4.75 exceeds 15%, the virgin asphalt binder grade shall be SBS PG70-28 and the elastic recovery shall be a minimum of 80.

4/ When FRAP or RAS is used alone, the maximum percent asphalt binder replacement designated on the table shall be reduced by 10 percent.

1031.07 HMA Mix Designs. At the Contractor's option, HMA mixtures may be constructed utilizing RAP/FRAP and/or RAS material meeting the detailed requirements specified herein.

(a) FRAP and/or RAS. FRAP and /or RAS mix designs shall be submitted for verification. If additional FRAP or RAS stockpiles are tested and found to be within tolerance, as defined under "Evaluation of Tests" herein, and meet all requirements herein, the additional FRAP or RAS stockpiles may be used in the original design at the percent previously verified.

(b) RAS. Type 1 and Type 2 RAS are not interchangeable in a mix design. A RAS stone bulk specific gravity (Gsb) of 2.300 shall be used for mix design purposes.

1031.08 HMA Production. HMA production utilizing FRAP and/or RAS shall be as follows.

To remove or reduce agglomerated material, a scalping screen, gator, crushing unit, or comparable sizing device approved by the Engineer shall be used in the RAS and FRAP feed system to remove or reduce oversized material. If material passing the sizing device adversely affects the mix production or quality of the mix, the sizing device shall be set at a size specified by the Engineer.

If during mix production, corrective actions fail to maintain FRAP, RAS or QC/QA test results within control tolerances or the requirements listed herein the Contractor shall cease production of the mixture containing FRAP or RAS and conduct an investigation that may require a new mix design.

(a) RAS. RAS shall be incorporated into the HMA mixture either by a separate weight depletion system or by using the RAP weigh belt. Either feed system shall be interlocked with the aggregate feed or weigh system to maintain correct proportions for all rates of production and batch sizes. The portion of RAS shall be controlled accurately to within ± 0.5 percent of the amount of RAS utilized. When using the weight depletion system, flow indicators or sensing devices shall be provided and interlocked with the plant controls such that the mixture production is halted when RAS flow is interrupted.

(b) HMA Plant Requirements. HMA plants utilizing FRAP and/or RAS shall be capable of automatically recording and printing the following information.

(1) Dryer Drum Plants.

a. Date, month, year, and time to the nearest minute for each print.

b. HMA mix number assigned by the Department.

c. Accumulated weight of dry aggregate (combined or individual) in tons (metric tons) to the nearest 0.1 ton (0.1 metric ton).

d. Accumulated dry weight of RAS and FRAP in tons (metric tons) to the nearest 0.1 ton (0.1 metric ton).

e. Accumulated mineral filler in revolutions, tons (metric tons), etc. to the nearest 0.1 unit.

f. Accumulated asphalt binder in gallons (liters), tons (metric tons), etc. to the nearest 0.1 unit.

g. Residual asphalt binder in the RAS and FRAP material as a percent of the total mix to the nearest 0.1 percent.

h. Aggregate RAS and FRAP moisture compensators in percent as set on the control panel. (Required when accumulated or individual aggregate and RAS and FRAP are printed in wet condition.)

i. When producing mixtures with FRAP and/or RAS, a positive dust control system shall be utilized.

j. Accumulated mixture tonnage.

k. Dust Removed (accumulated to the nearest 0.1 ton)

(2) Batch Plants.

a. Date, month, year, and time to the nearest minute for each print.

b. HMA mix number assigned by the Department.

c. Individual virgin aggregate hot bin batch weights to the nearest pound (kilogram).

d. Mineral filler weight to the nearest pound (kilogram).

f. RAS and FRAP weight to the nearest pound (kilogram).

g. Virgin asphalt binder weight to the nearest pound (kilogram).

h. Residual asphalt binder in the RAS and FRAP material as a percent of the total mix to the nearest 0.1 percent.

The printouts shall be maintained in a file at the plant for a minimum of one year or as directed by the Engineer and shall be made available upon request. The printing system will be inspected by the Engineer prior to production and verified at the beginning of each construction season thereafter.

1031.09 RAP in Aggregate Surface Course and Aggregate Shoulders. The use of RAP or FRAP in aggregate surface course and aggregate shoulders shall be as follows.

(a) Stockpiles and Testing. RAP stockpiles may be any of those listed in Article 1031.02, except "Non-Quality" and "FRAP". The testing requirements of Article 1031.03 shall not apply. RAP used to construct aggregate surface course and aggregate shoulders shall be according to the current Bureau of Materials and Physical Research's Policy Memorandum, "Reclaimed Asphalt Pavement (RAP) for Aggregate Applications"

(b) Gradation. The RAP material shall meet the gradation requirements for CA 6 in accordance with Art.1004.01 (c), except the requirements for the minus No. 200 (75µm) sieve will not apply. The sample for the RAP material shall be air dried to constant weight prior to being tested for gradation."

Buffalo Grove Road Patching

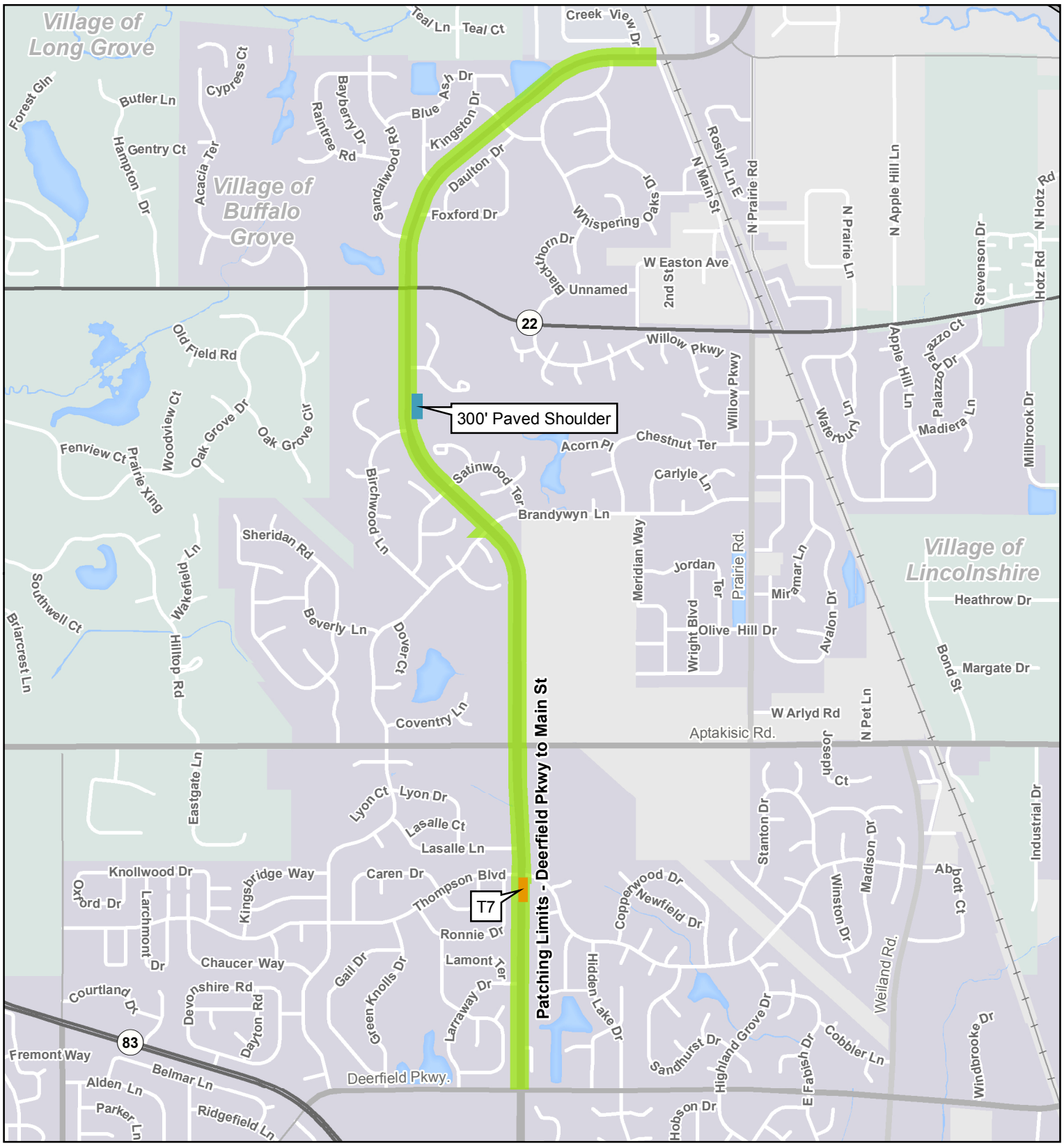

Patching Limits

Paved Shoulder

Turn Lane

0 650 1,300 2,600 Feet

N

LCDOT GIS
4/15/2016

LakeCounty
Division of Transportation

Buffalo Grove Road Patching - Turn Lanes

Patching Limits

Paved Shoulder

Turn Lane

0 250 500 1,000 Feet

N

LakeCounty
Division of Transportation

LCDOT GIS
4/15/2016

HMA PARTIAL DEPTH PATCHING OF CONCRETE PAVEMENT

SCHEDULE OF QUANTITIES

SOUTHBOUND (SB)/ NORTHBOUND (NB)	PATCH LENGTH (feet)	PATCH WIDTH (feet)	NUMBER OF PATCHES	PATCH AREA (sq ft)	PATCH AREA (sq yd)	PARTIAL DEPTH PATCHING = 90% PATCH AREA (sq yd)	FULL DEPTH PATCHING = 10% PATCH AREA (sq yd)
Buffalo Grove Road (Deerfield Road to Main Street)							
NB	4.0	12.0	160.0	7680.0	853.3	768.0	85.3
SB	4.0	12.0	200.0	9600.0	1066.7	960.0	106.7
Buffalo Grove Road Patching					**1920.0**	**1728.0**	**192.0**

TOTAL PATCH AREA	**1920.0**
PORTLAND CEMENT CONCRETE SURFACE REMOVAL 2" (sq yd)	**1728.0**
BITUMINOUS MATERIALS (TACK COAT) * (0.45 pound/sq yd)	**777.6**
2" HOT-MIX ASPHALT SURFACE COURSE MIX "D", N70 (112 lb/sq yd/inch = tons)	**193.5**
CLASS D PATCHES, TYPE II, 10 INCH	**192.0**

TURN LANES

Buffalo Grove Road Patching
SECTION 16-00249-04-RS
LAKE COUNTY

SCHEDULE OF QUANTITIES

TURN LANE #	TAPER			STORAGE			INTERSECTION			TOTAL AREA (sq yd)
	LENGTH (ft)	AVERAGE WIDTH** (ft)	AREA (sq yd)	LENGTH (ft)	AVERAGE WIDTH (ft)	AREA (sq yd)	AVERAGE LENGTH (ft)	WIDTH (ft)	AREA (sq yd)	
At Whispering Oaks Drive - Northbound										
T1	143.0	10.5	166.8	110.0	12.0	146.7	40.5	32.0	144.0	457.5
At Port Clinton Road - Southbound										
T2	244.0	11.5	311.8	110.0	12.0	146.7	60.0	35.0	233.3	691.8
At Butternut Drive - Southbound										
T3	163.0	10.5	190.2	108.0	12.0	144.0	40.5	32.0	144.0	478.2
At Butternut Drive - Northbound										
T4	146.0	10.5	170.3	96.0	12.0	128.0	51.0	34.0	192.7	491.0
At Dunstan Lane - Southbound										
T5	157.0	10.5	183.2	110.0	12.0	146.7	48.5	33.0	177.8	507.7
At Foxford Drive - Northbound										
T6	44.0	6.0	29.3	0.0	0.0	0.0	44.0	44.0	215.1	244.4
At Thompson Boulevard - Northbound										
T7	150.0	9.5	158.3	0.0	0.0	0.0	0.0	0.0	0.0	158.3

** Includes Paved Shoulder

TOTAL AREA	3028.9

Foxford Drive taper is north of intersection

TURN LANES

Buffalo Grove Road Patching
SECTION 16-00249-04-RS
LAKE COUNTY

SCHEDULE OF QUANTITIES

TURN LANE #	EXISTING		PAVEMENT REMOVAL / MILLING		POLYMERIZED LEVELING BINDER (MACHINE METHOD) IL-4.75, N50**		HOT-MIX ASPHALT BINDER COURSE, IL-19.0, N70**		HOT-MIX ASPHALT SURFACE COURSE, MIX "D", N70**		BITUMINOUS MATERIALS (TACK COAT) (pound)
	TOTAL AREA (sq yd)	EXISTING PAVEMENT THICKNESS (in)	PAVEMENT REMOVAL (sq yd)	2¼" MILLING (sq yd)	THICKNESS (in)	QUANTITY (tons)	THICKNESS (in)	QUANTITY (tons)	THICKNESS (in)	QUANTITY (tons)	
At Whispering Oaks Drive - Northbound											
T1	457.5	7.0		457.5	0.75	19.2			1.5	38.4	411.8
At Port Clinton Road - Southbound											
T2	244.0	7.0		244.0	0.75	10.2			1.5	20.5	219.6
At Butternut Drive - Southbound											
T3	163.0	2.5	163.0				2.5	22.8	1.5	13.7	73.4
At Butternut Drive - Northbound											
T4	146.0	3.0	146.0				2.5	20.4	1.5	12.3	65.7
At Dunstan Lane - Southbound											
T5	157.0	3.0	157.0				2.5	22.0	1.5	13.2	70.7
At Foxford Drive - Northbound											
T6	44.0	4.0		44.0	0.75	1.8			1.5	3.7	39.6
At Thompson Boulevard - Northbound											
T7	150.0	4.0		150.0	0.75	6.3			1.5	12.6	135.0
TURN LANE TOTALS			**466.0**	**895.5**		**37.6**		**65.2**		**114.4**	**1015.7**

* 112 lb/sq yd/in thickness

** 0.45 lbs/sq yd (1 application for pavement removal & 2 applications for milled pavement)

EXISTING PAVEMENT THICKNESS ≤ 4" => PAVEMENT REMOVAL & SURFACE WITH HMA BINDER AND SURFACE COURSES.

EXISTING PAVEMENT THICKNESS > 4" => HMA SURFACE REMOVAL (2¼") & SURFACE WITH POLYMERIZED LEVELING BINDER AND HMA SURFACE COURSE.

HMA SHOULDERS

SCHEDULE OF QUANTITIES

Buffalo Grove Road Patching
SECTION 16-00249-04-RS
LAKE COUNTY

SOUTHBOUND (SB)/ NORTHBOUND (NB)		EXISTING - MILLING				HOT-MIX ASPHALT BINDER COURSE, IL-19.0, N70**		HOT-MIX ASPHALT SURFACE COURSE, MIX "D", N70**		BITUMINOUS MATERIALS (TACK COAT) (pound)
	FROM - TO	LENGTH (feet)	WIDTH (feet)	AREA (sq ft)	PAVED SHOULDER REMOVAL (sq yd)	THICKNESS (in)	QUANTITY (tons)	THICKNESS (in)	QUANTITY (tons)	
Buffalo Grove Road (IL Route 22 to Main Street)										
SB	Creek View Dr - W. Port Clinton Road	605.0	5.0	3025.0	336.1	2.5	47.1	1.5	28.2	151.3
SB	W. Port Clinton Road - Butternut Drive	565.0	5.0	2825.0	313.9	2.5	43.9	1.5	26.4	141.3
SB	Butternut Drive - Dunstan Lane	724.0	5.0	3620.0	402.2	2.5	56.3	1.5	33.8	181.0
SB	Dunstan Lane - Sandalwood Road	372.0	5.0	1860.0	206.7	2.5	28.9	1.5	17.4	93.0
NB	Foxford Drive - Butternut Drive	1101.0	5.0	5505.0	611.7	2.5	85.6	1.5	51.4	275.3
NB	Butternut Drive - Whispering Oaks Drive	1190.0	5.0	5950.0	661.1	2.5	92.6	1.5	55.5	297.5
NB	Whispering Oaks Drive - Vernon Township	230.0	5.0	1150.0	127.8	2.5	17.9	1.5	10.7	57.5
NB	Vernon Township - Main Street	150.0	5.0	750.0	83.3	2.5	11.7	1.5	7.0	37.5
Buffalo Grove Road (Aptakisic Road to IL Route 22)										
NB	Banyan Tree Lane End of Curb Right Turn Lane to 300 feet south	300.0	5.0	1500.0	166.7	2.5	23.3	1.5	14.0	75.0
TURN LANE TOTALS				**26185.0**	**2909.4**		**407.3**		**244.4**	**1309.3**

* 112 lb/sq yd/in thickness ** 0.45 lbs/sq yd

CONTINGENCY ITEMS

SCHEDULE OF QUANTITIES

CONTINGENCY QUANTITIES

Turn Lane Aggregate	
AGGREGATE BASE COURSE, TYPE B	30.0 ton
Short Term Pavement Marking	
PAVEMENT MARKING TAPE, TYPE III 4"	500.0 feet
Intersection Traffic Signals	
DETECTOR LOOPS, TYPE 1	75.0 feet

Buffalo Grove Road Patching
SECTION 16-00249-04-RS
LAKE COUNTY

SUMMARY OF QUANTITIES

Item No.	Pay Code	Description	Quantity	Unit
1	35101400	AGGREGATE BASE COURSE, TYPE B	30.0	TON
2	40600290	BITUMINOUS MATERIALS (TACK COAT)	3103.0	POUND
3	40600827	POLYMERIZED LEVELING BINDER (MACHINE METHOD), IL-4.75, N50	38.0	TON
4	40603085	HOT-MIX ASPHALT BINDER COURSE, IL-19.0, N70	473.0	TON
5	40603340	HOT-MIX ASPHALT SURFACE COURSE, MIX "D", N70	552.0	TON
6	44000100	PAVEMENT REMOVAL	466.0	SQ YD
7	44000158	HOT-MIX ASPHALT SURFACE REMOVAL, 2 1/4"	896.0	SQ YD
8	44004250	PAVED SHOULDER REMOVAL	2909.0	SQ YD
9	44201765	CLASS D PATCHES, TYPE II, 10 INCH	192.0	SQ YD
10	70300520	PAVEMENT MARKING TAPE, TYPE III 4"	500.0	FOOT
11	88600100	DETECTOR LOOP, TYPE I	75.0	FOOT
12	X7010216	TRAFFIC CONTROL AND PROTECTION (SPECIAL)	1.0	L SUM
13	Z0038121	PORTLAND CEMENT CONCRETE SURFACE REMOVAL 2"	1728.0	SQ YD

RICHARD D. McMORRIS
062-055379
LICENSED PROFESSIONAL ENGINEER OF ILLINOIS

Signature

25 April 2016
Date

062-055379
Illinois license

11/30/2017
Expiration Date

CIVIL
Field

CLASS C

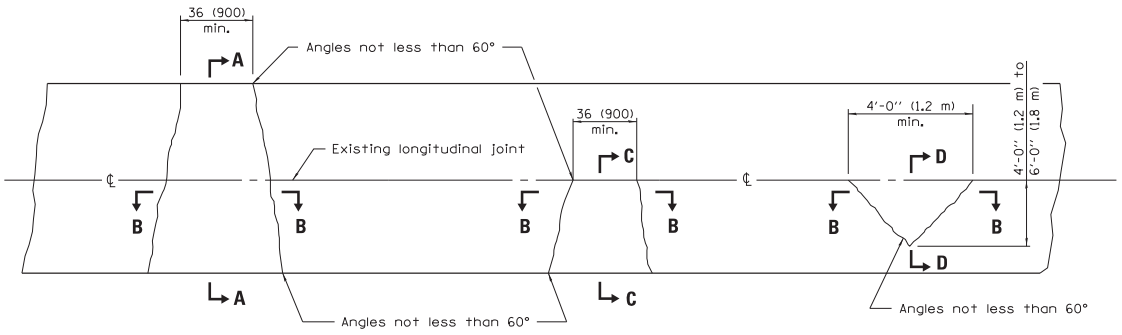

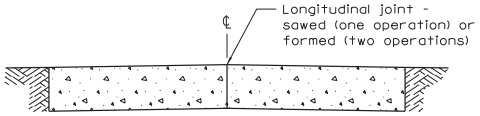

SECTION A–A

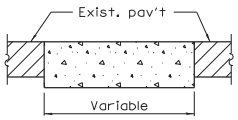

SECTION B–B

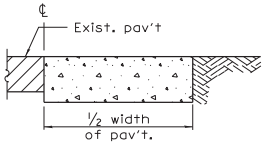

SECTION C–C

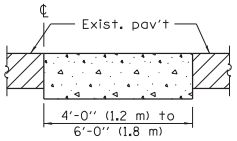

SECTION D–D

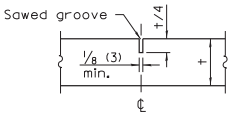

DETAIL OF SAWED CONTRACTION JOINT

Note:
Longitudinal joints shall be as detailed on Standard 420001, except tie bars are not required for patches 20'-0" (6.0 m) or less in length.

CLASS D

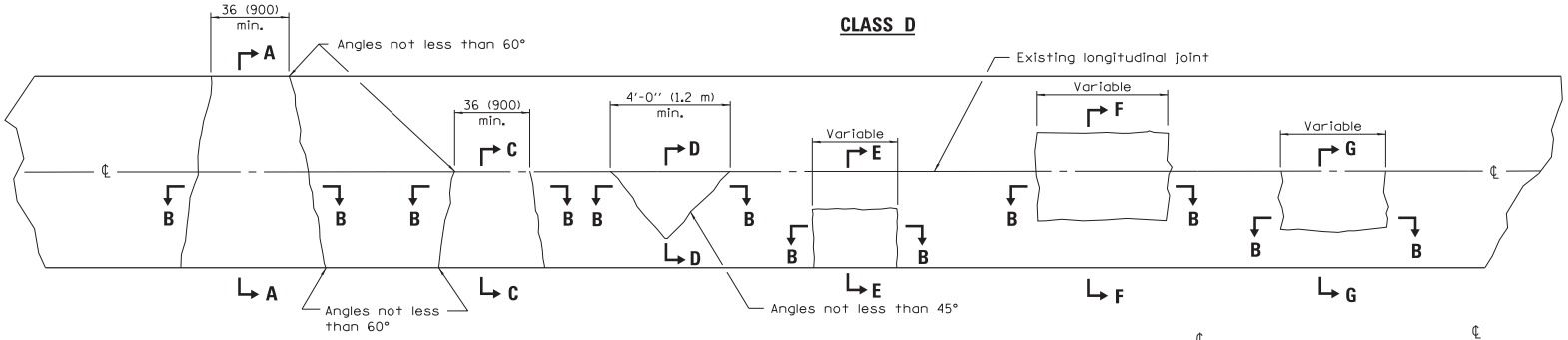

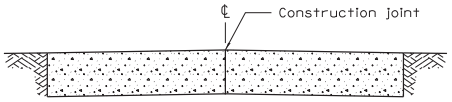

SECTION A–A
(Built in two operations)

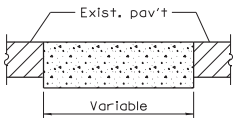

SECTION B–B

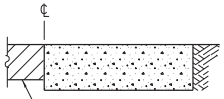

SECTION C–C

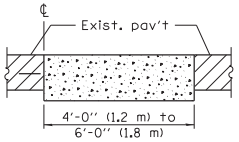

SECTION D–D

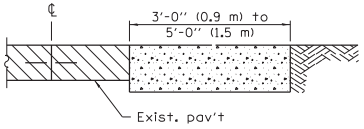

SECTION E–E

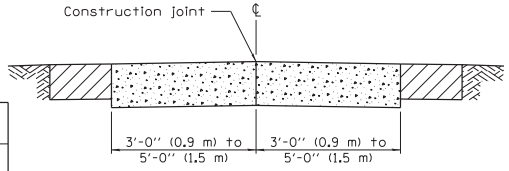

SECTION F–F
(Built in two operations)

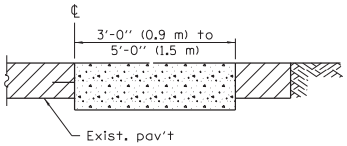

SECTION G–G

GENERAL NOTES

Existing tie bars shall be either cut or removed. Marginal bars shall be cut.

All dimensions are in inches (millimeters) unless otherwise shown.

Illinois Department of Transportation

PASSED January 1, 2008
ENGINEER OF POLICY AND PROCEDURES
APPROVED January 1, 2008
ENGINEER OF DESIGN AND ENVIRONMENT

ISSUED 1-1-97

DATE	REVISIONS
1-1-08	Switched units to
	English (metric).
1-1-07	Revised Note for
	Class C patches.

CLASS C and D PATCHES

STANDARD 442201–03

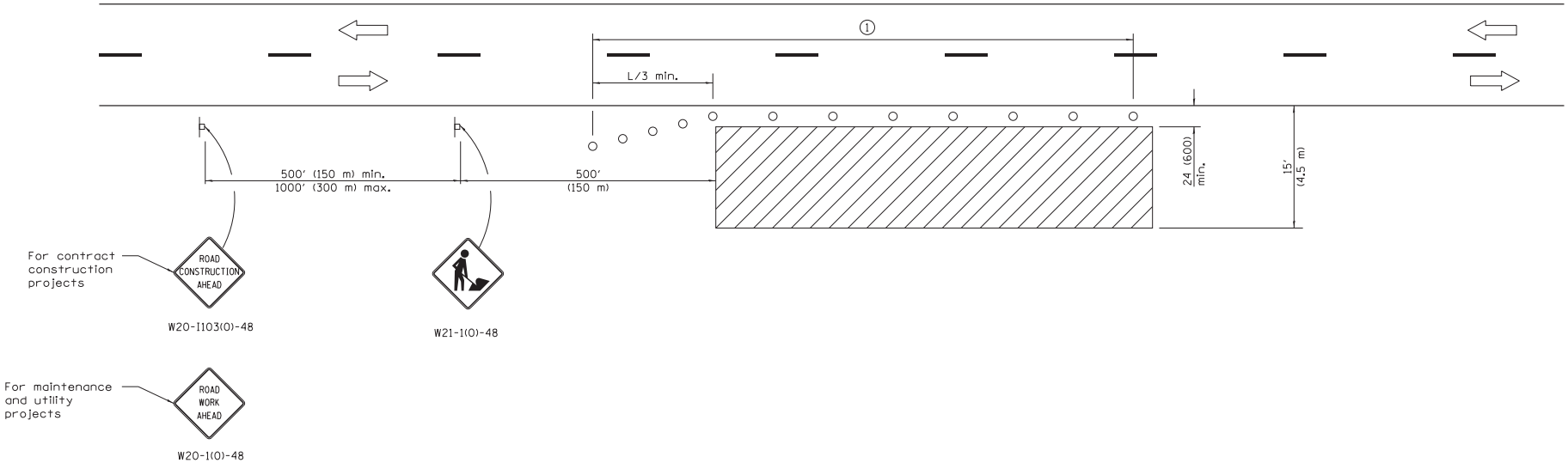

TYPICAL APPLICATIONS

Utility operations
Culvert extensions
Side slope changes
Guardrail installation and maintenance
Delineator installation
Landscaping operations
Shoulder repair
Sign installation and maintenance

SYMBOLS

Work area

Sign

Cone, drum or barricade

① When the work operation exceeds one hour, cones, drums or barricades shall be placed at 25′ (8 m) centers for L/3 distance, and at 50′ (15 m) centers through the remainder of the work area.

GENERAL NOTES

This Standard is used where any vehicles, equipment, workers or their activities will encroach in the area 15′ (4.5 m) to 24 (600) from the edge of pavement.

Calculate L as follows:

SPEED LIMIT	FORMULAS English	FORMULAS (Metric)
40 mph (70 km/h) or less:	$L=\frac{WS^2}{60}$	$L=\frac{WS^2}{150}$
45 mph (80 km/h) or greater:	L=(W)(S)	L=0.65(W)(S)

W = Width of offset in feet (meters).

S = Normal posted speed mph (km/h).

All dimensions are in inches (millimeters) unless otherwise shown.

Illinois Department of Transportation

APPROVED January 1, 2014
ENGINEER OF SAFETY ENGINEERING

APPROVED January 1, 2014
ENGINEER OF DESIGN AND ENVIRONMENT

ISSUED 1-1-97

DATE	REVISIONS
1-1-14	Revised workers sign
	number to agree with
	current MUTCD.
1-1-13	Omitted text 'WORKERS'
	sign.

OFF–RD OPERATIONS, 2L, 2W, 15′ (4.5 m) TO 24″ (600 mm) FROM PAVEMENT EDGE

STANDARD 701006–05

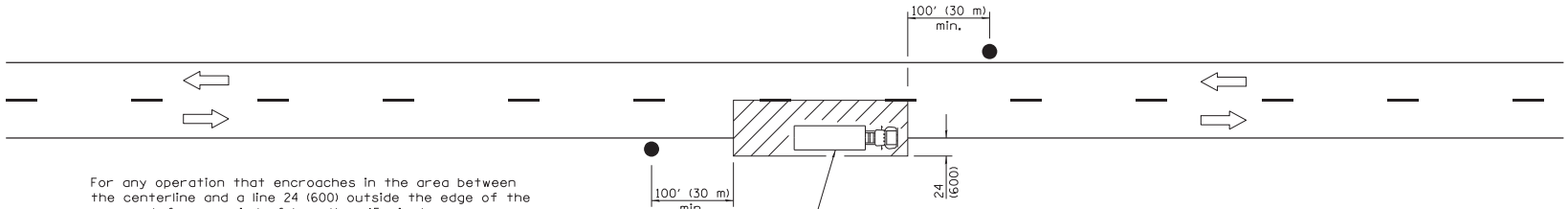

For any operation that encroaches in the area between the centerline and a line 24 (600) outside the edge of the pavement for a period of less than 15 minutes.

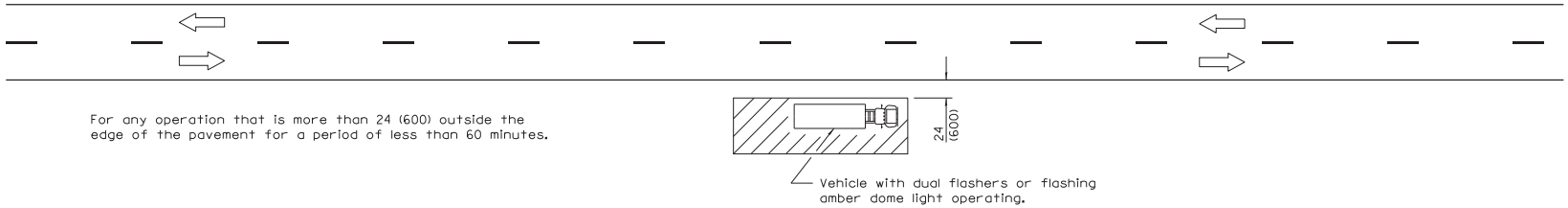

For any operation that is more than 24 (600) outside the edge of the pavement for a period of less than 60 minutes.

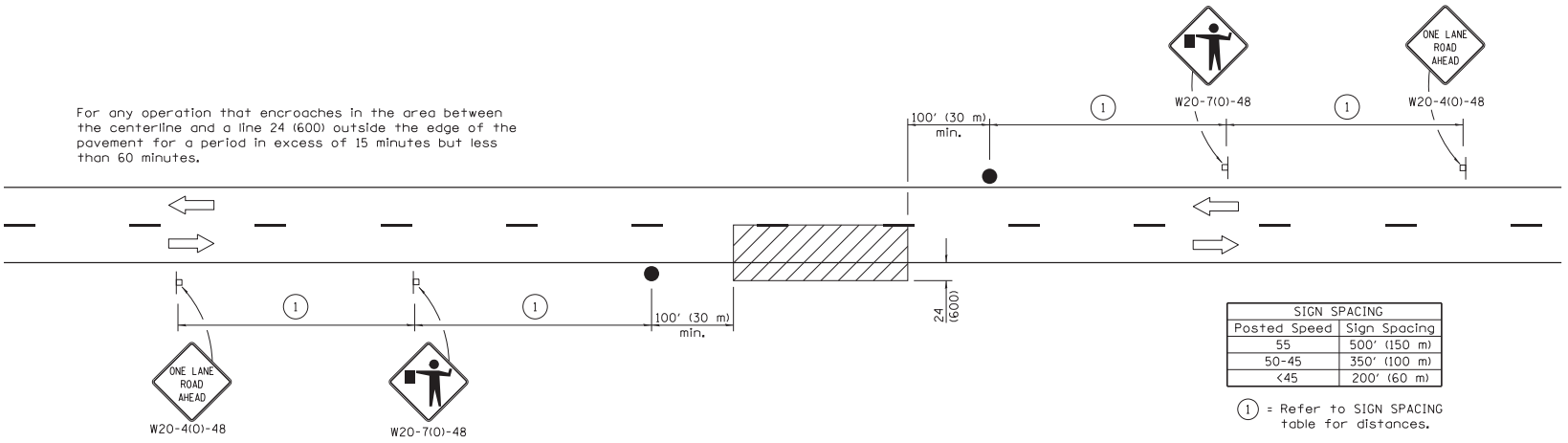

For any operation that encroaches in the area between the centerline and a line 24 (600) outside the edge of the pavement for a period in excess of 15 minutes but less than 60 minutes.

SIGN SPACING	
Posted Speed	Sign Spacing
55	500' (150 m)
50-45	350' (100 m)
<45	200' (60 m)

(1) = Refer to SIGN SPACING table for distances.

All dimensions are in inches (millimeters) unless otherwise shown.

TYPICAL APPLICATIONS

Marking patches
Field survey
String line
Utility operations
Cleaning up debris on pavement

SYMBOLS

Work area

Sign on portable or permanent support

Flagger with traffic control sign

Illinois Department of Transportation

APPROVED January 1, 2011
ENGINEER OF SAFETY ENGINEERING

APPROVED January 1, 2011
ENGINEER OF DESIGN AND ENVIRONMENT

ISSUED 1-1-97

DATE	REVISIONS
1-1-11	Revised flagger sign.
1-1-09	Switched units to
	English (metric).

LANE CLOSURE, 2L, 2W, SHORT TIME OPERATIONS

STANDARD 701301–04

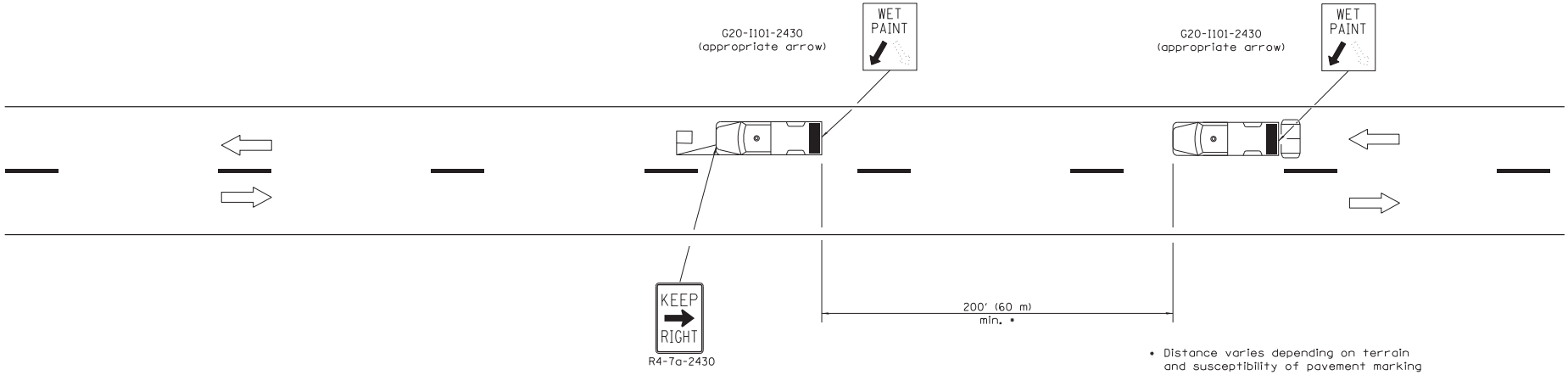

* Distance varies depending on terrain and susceptibility of pavement marking or crack sealant to wheel tracking.

TYPICAL APPLICATIONS

Landscaping work
Utility work
Pavement marking
Weed spraying
Roadometer measurements
Debris cleanup
Crack pouring

SYMBOLS

Arrow board (Hazard Mode only)

Truck with headlights, emergency flashers and flashing amber light. (visible from all directions)

18x18 (450x450) min. orange flag (use when guide wheel is used)

Truck mounted attenuator

GENERAL NOTES

This Standard is used where any vehicle, equipment, workers or their activities will require a continuous moving operation where the average speed is greater than 3 mph (5 km/h).

For shoulder operations not encroaching on the pavement, use DETAIL A, Standard 701426.

All dimensions are in inches (millimeters) unless otherwise shown.

Illinois Department of Transportation

APPROVED January 1, 2009
ENGINEER OF OPERATIONS

APPROVED January 1, 2009
ENGINEER OF DESIGN AND ENVIRONMENT

ISSUED 1-1-97

DATE	REVISIONS
1-1-09	Switched units to
	English (metric). Omitted
	Pass With Care sign.
1-1-00	Elim. speed restrictions
	in Standard title.

LANE CLOSURE 2L, 2W MOVING OPERATIONS–DAY ONLY

STANDARD 701311–03

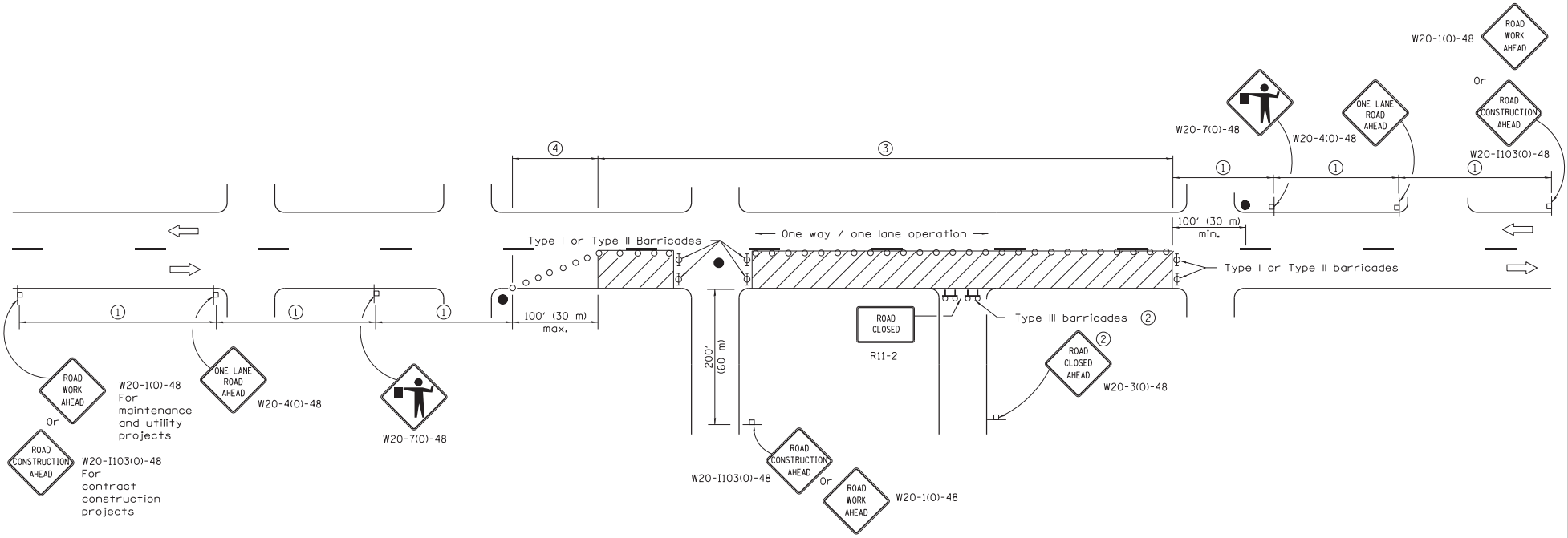

SIGN SPACING	
Posted Speed	Sign Spacing
55	500' (150 m)
50-45	350' (100 m)
<45	200' (60 m)

SYMBOLS

- Work area
- Cone, drum or barricade (not required for moving operations)
- Sign on portable or permanent support
- Flagger with traffic control sign
- Barricade or drum with flashing light
- Type III barricade with flashing lights

(1) Refer to SIGN SPACING TABLE for distances.

(2) For approved sideroad closures.

(3) Cones at 25' (8 m) centers for 250' (75 m). Additional cones may be placed at 50' (15 m) centers. When drums or Type I or Type II barricades are used, the interval between devices may be doubled.

(4) Cones, drums or barricades at 20' (6 m) centers.

GENERAL NOTES

This Standard is used where at any time, day or night, any vehicle, equipment, workers or their activities encroach on the pavement requiring the closure of one traffic lane in an urban area.

All dimensions are in inches (millimeters) unless otherwise shown.

Illinois Department of Transportation

APPROVED January 1, 2011
ENGINEER OF SAFETY ENGINEERING

APPROVED January 1, 2011
ENGINEER OF DESIGN AND ENVIRONMENT

ISSUED 1-1-97

DATE	REVISIONS
1-1-11	Revised flagger sign.
1-1-09	Switched units to
	English (metric).
	Corrected sign No.'s.

URBAN LANE CLOSURE, 2L, 2W, UNDIVIDED

STANDARD 701501–06

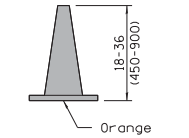

Posted speed < 45 mph

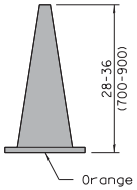

Posted speed ≥ 45 mph

CONE FOR DAYTIME

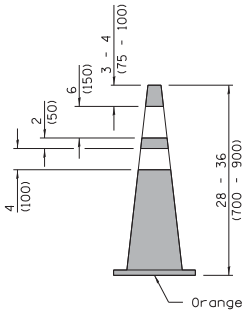

REFLECTORIZED CONE FOR NIGHTTIME

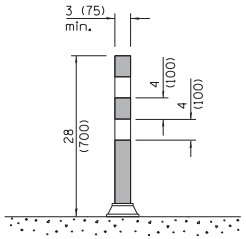

FLEXIBLE DELINEATOR

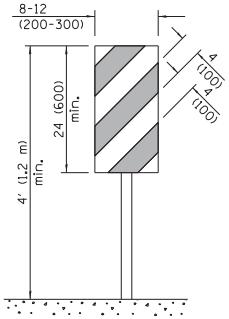

VERTICAL PANEL
POST MOUNTED

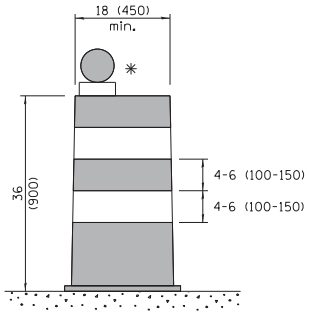

DRUM

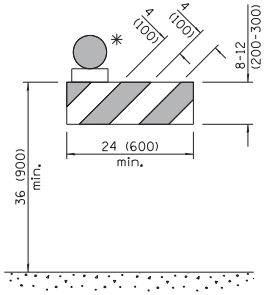

TYPE I BARRICADE

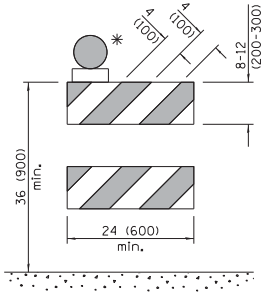

TYPE II BARRICADE

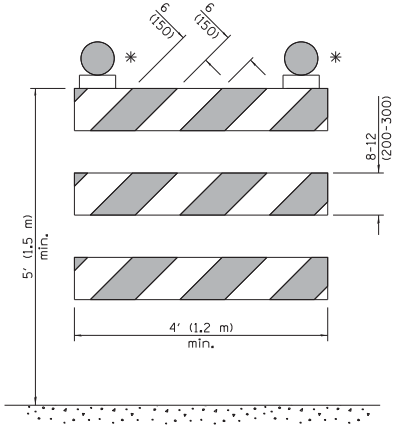

TYPE III BARRICADE

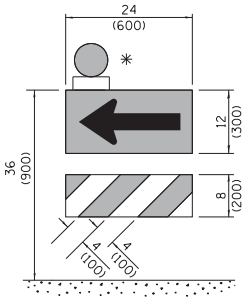

DIRECTION INDICATOR BARRICADE

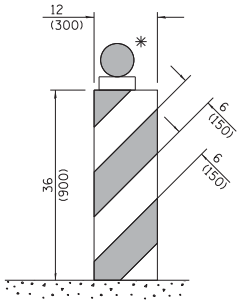

VERTICAL BARRICADE

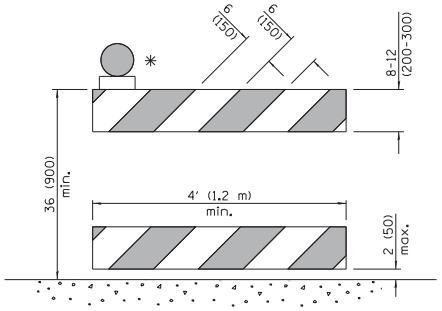

DETECTABLE PEDESTRIAN CHANNELIZING BARRICADE

✳ Warning lights (if required)

GENERAL NOTES

All heights shown shall be measured above the pavement surface.

All dimensions are in inches (millimeters) unless otherwise shown.

DATE	REVISIONS
4-1-16	Add dim's to barricades. Rev.
	note for post mnt. signs.
	Rev. cone dtls. Add W12-I103.
1-1-15	Revised two sign numbers on
	sheet 2. Added note reg.
	PHOTO ENFORCED plaque.

TRAFFIC CONTROL DEVICES

(Sheet 1 of 3)

STANDARD 701901-05

Illinois Department of Transportation

APPROVED April 1, 2016
ENGINEER OF OPERATIONS

APPROVED April 1, 2016
ENGINEER OF DESIGN AND ENVIRONMENT

ISSUED 1-1-97

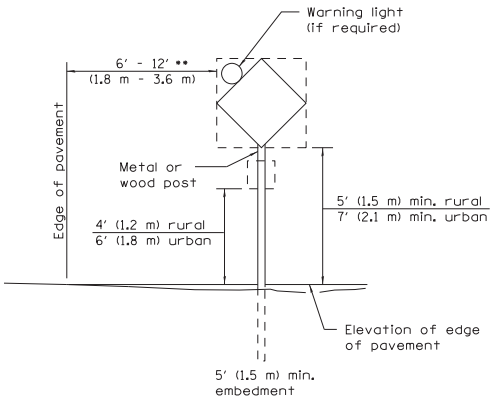

POST MOUNTED SIGNS

•• When curb or paved shoulder are present this dimension shall be 24 (600) to the face of curb or 6′ (1.8 m) to the outside edge of the paved shoulder.

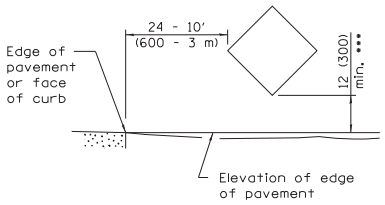

SIGNS ON TEMPORARY SUPPORTS

••• When work operations exceed four days, this dimension shall be 5′ (1.5 m) min. If located behind other devices, the height shall be sufficient to be seen completely above the devices.

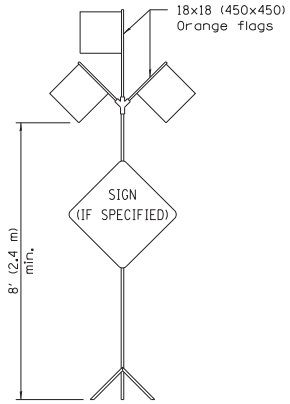

HIGH LEVEL WARNING DEVICE

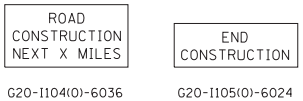

G20-I104(0)-6036 G20-I105(0)-6024

This signing is required for all projects 2 miles (3200 m) or more in length.

ROAD CONSTRUCTION NEXT X MILES sign shall be placed 500′ (150 m) in advance of project limits.

END CONSTRUCTION sign shall be erected at the end of the job unless another job is within 2 miles (3200 m).

Dual sign displays shall be utilized on multi-lane highways.

WORK LIMIT SIGNING

W21-I115(0)-3618

R2-1-3648

R10-I108p-3618 ••••

R2-I106p-3618

Sign assembly as shown on Standards or as allowed by District Operations.

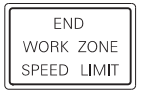

G20-I103(0)-6036

This sign shall be used when the above sign assembly is used.

HIGHWAY CONSTRUCTION SPEED ZONE SIGNS

•••• R10-I108p shall only be used along roadways under the juristiction of the State.

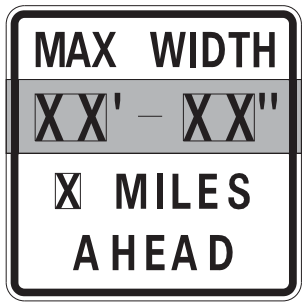

W12-I103-4848

WIDTH RESTRICTION SIGN

XX′-XX″ width and X miles are variable.

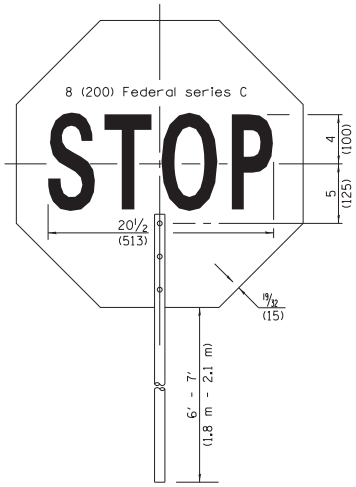

FRONT SIDE

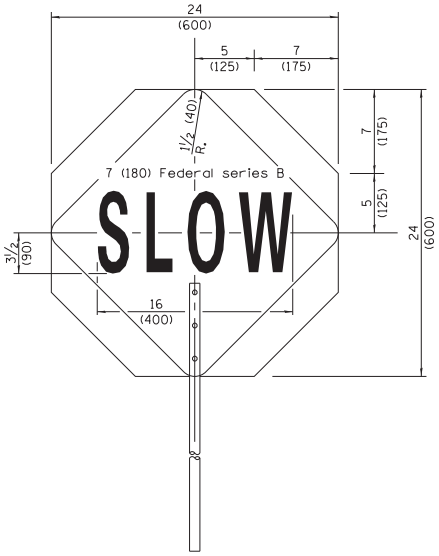

REVERSE SIDE

FLAGGER TRAFFIC CONTROL SIGN

Illinois Department of Transportation

APPROVED April 1, 2016
ENGINEER OF OPERATIONS

APPROVED April 1, 2016
ENGINEER OF DESIGN AND ENVIRONMENT

ISSUED 1-1-97

TRAFFIC CONTROL DEVICES

(Sheet 2 of 3)

STANDARD 701901–05

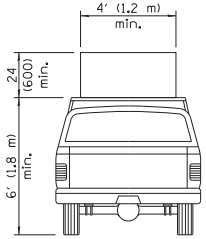

TYPE A ROOF MOUNTED

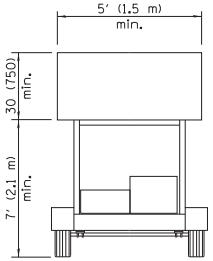

TYPE B ROOF OR TRAILER MOUNTED

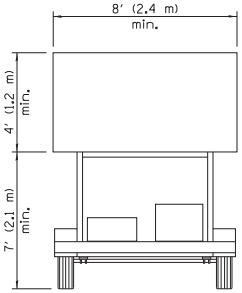

TYPE C TRAILER MOUNTED

ARROW BOARDS

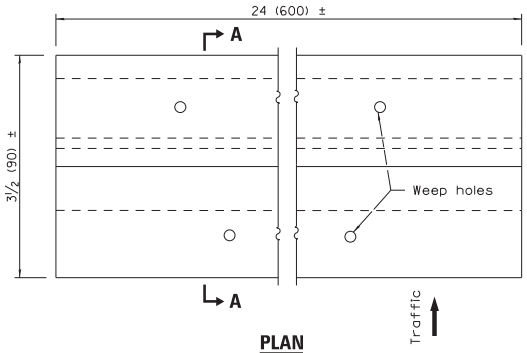

PLAN

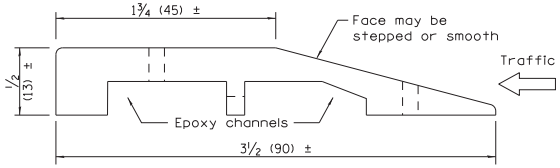

SECTION A–A

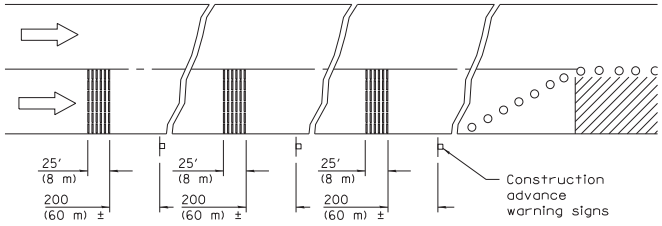

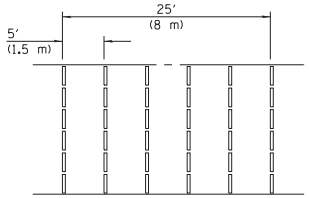

TYPICAL INSTALLATION

TEMPORARY RUMBLE STRIPS

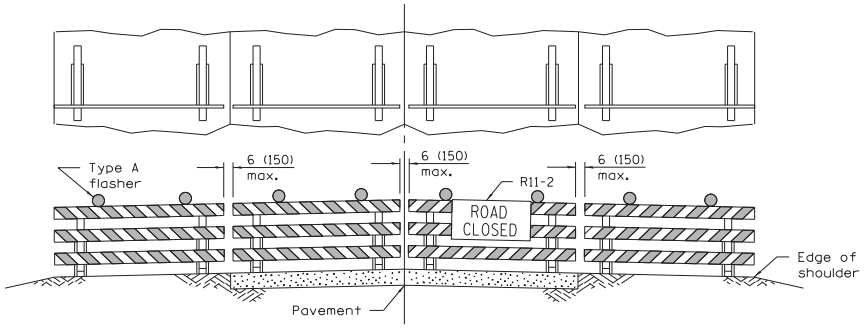

ROAD CLOSED TO ALL TRAFFIC

Reflectorized striping may be omitted on the back side of the barricades. If a Type III barricade with an attached sign panel which meets NCHRP 350 is not available, the sign may be mounted on an NCHRP 350 temporary sign support directly in front of the barricade.

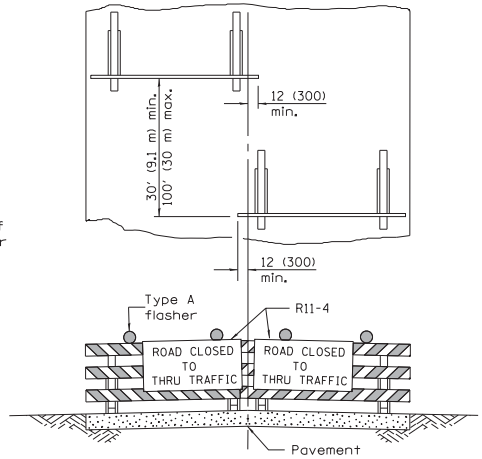

ROAD CLOSED TO THRU TRAFFIC

Reflectorized striping shall appear on both sides of the barricades. If a Type III barricade with an attached sign panel which meets NCHRP 350 is not available, the signs may be mounted on NCHRP 350 temporary sign supports directly in front of the barricade.

TYPICAL APPLICATIONS OF TYPE III BARRICADES CLOSING A ROAD

Illinois Department of Transportation

APPROVED April 1, 2016
ENGINEER OF OPERATIONS

APPROVED April 1, 2016
ENGINEER OF DESIGN AND ENVIRONMENT

ISSUED 1-1-97

TRAFFIC CONTROL DEVICES

(Sheet 3 of 3)

STANDARD 701901–05

TYPICAL APPLICATION OF TRAFFIC CONTROL DEVICES for HIGHWAY CONSTRUCTION, CONTRACT MAINTENANCE and UTILITY OPERATIONS

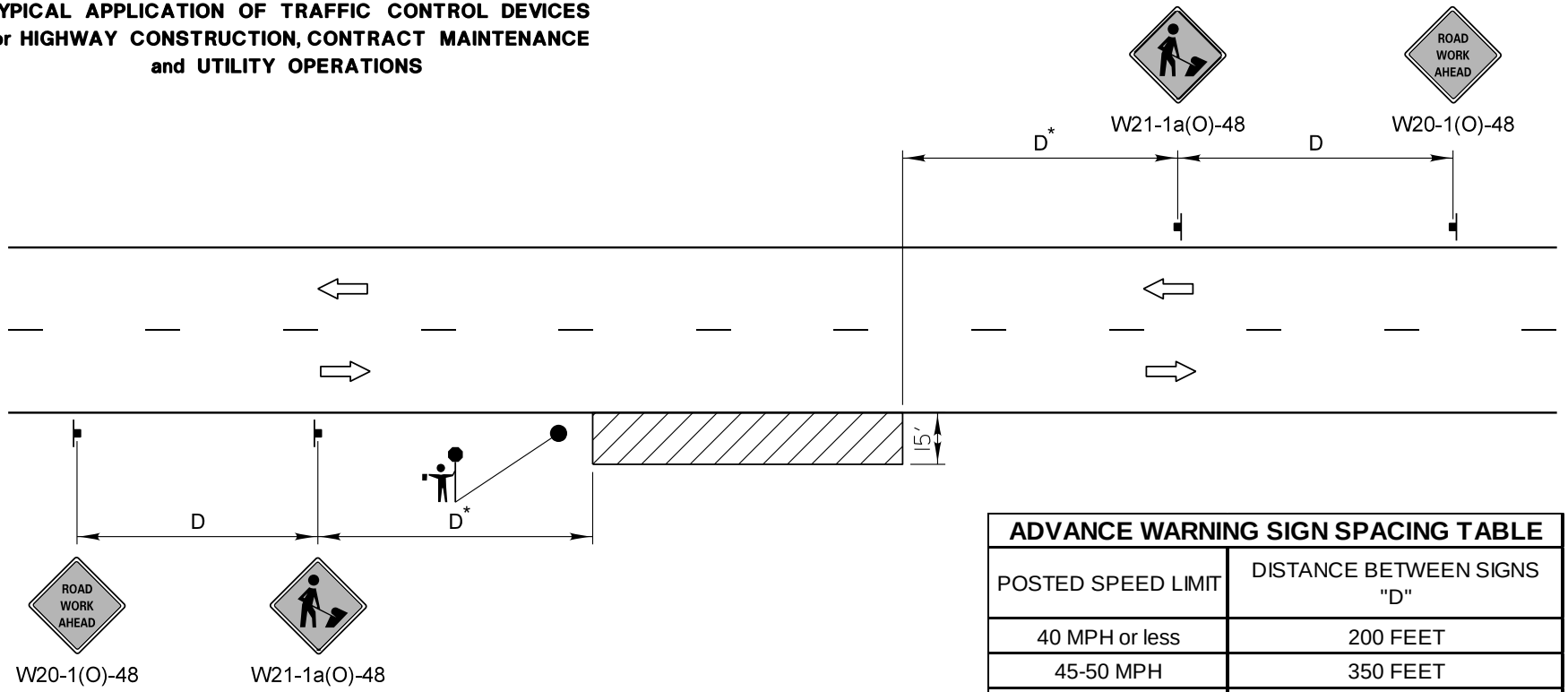

ADVANCE WARNING SIGN SPACING TABLE	
POSTED SPEED LIMIT	DISTANCE BETWEEN SIGNS "D"
40 MPH or less	200 FEET
45-50 MPH	350 FEET
55 MPH	500 FEET

GENERAL NOTES:

This special detail is used at any time, any vehicle, equipment, workers or their activities require a stationary, intermittent or continuous moving operation within 15 feet of the traffic lane, where the average speed is 1 mph or less.

* Minimum distance "D" is shown in the Advance Warning Sign Spacing Table. If the work is a moving operation, the maximum distance "D" may be extended to ½ the length required for one normal working day's operation or 4 miles, whichever is less.

If the work operation does not exceed 60 minutes, traffic control may be according to I.D.O.T. Highway Standard 701301.

SYMBOLS

WORK AREA

SIGN ON PORTABLE OR PERMANENT SUPPORT

FLAGGER WITH TRAFFIC CONTROL SIGN WHEN REQUIRED

NOT TO SCALE

MODIFIED IDOT STANDARD 701011-04

REVISIONS	DATE
Title Block Revision	8/1/09
Reformat LCDOT Standard	7/15/10
Updated IDOT Standard Version #	3/29/16

LakeCounty Division of Transportation

APPROVED BY: A. KHAWAJA
DATE: APRIL 1, 2007

TWO LANE, TWO WAY, OFF-ROAD OPERATIONS DAY OPERATIONS ONLY

LC7000

TYPICAL APPLICATION OF TRAFFIC CONTROL DEVICES for HIGHWAY CONSTRUCTION, CONTRACT MAINTENANCE and UTILITY OPERATIONS

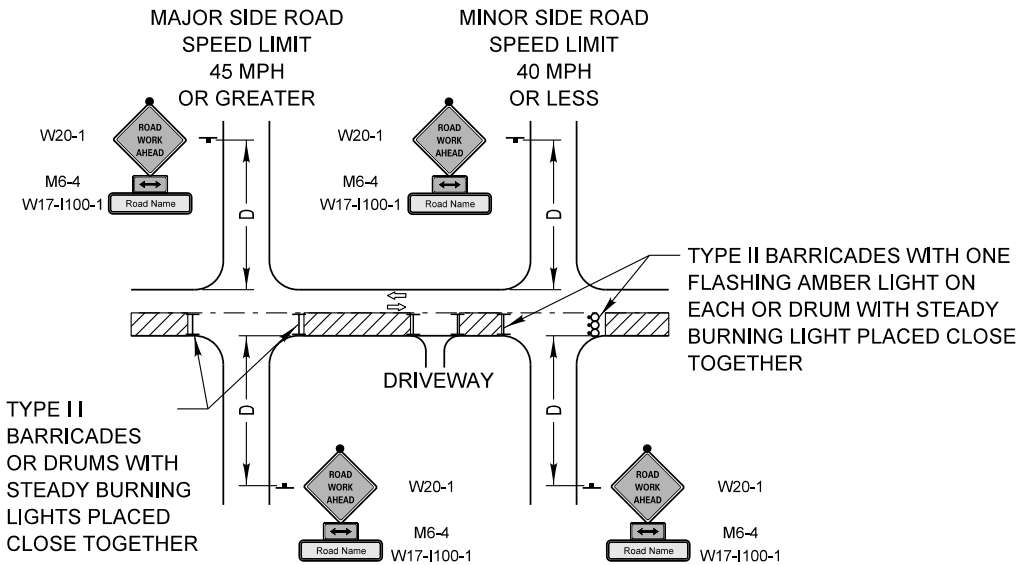

SYMBOLS

- WORK AREA
- SIGN ON PORTABLE OR PERMANENT SUPPORT
- TYPE II BARRICADE W/TYPE A FLASHING LIGHT
- DRUM WITH STEADY BURNING LIGHT

ADVANCE WARNING SIGN SPACING TABLE	
POSTED SPEED LIMIT	DISTANCE BETWEEN SIGNS "D"
40 MPH or less	200 FEET
45-50 MPH	350 FEET
55 MPH	500 FEET

NOT TO SCALE

GENERAL NOTE:

This Standard is used where at any time, day or night, any vehicle, equipment, workers or their activities encroach on the pavement or where construction requires lane closures.

DESIGN NOTES:

1. For a side road with a speed limit of 40 mph or less, the closed portion of the main route shall be protected by blocking with Type II barricades or drums, 1/3 of the cross section of the closed portion of the roadway.
2. For a side road with a speed limit of 45 mph or greater, the closed portion of the main route shall be protected by blocking with Type II barricades or drums, 1/2 of the cross section of the closed portion of the roadway.
3. All W20-1 "ROAD WORK AHEAD" signs shall be 48"x48" with fluorescent orange reflective sheeting with an amber Type A flashing light mounted on the sign.
4. When the side road lies between the beginning of the mainline signing and the work zone, a M6-1 Single Headed Arrow shall be used in lieu of the M6-4 Double Headed Arrow.
5. For a lane closure on a side road, use the applicable portions of the appropriate Highway Standard or Traffic Control Detail. The spacing of the signs and barricades or drums shall be adjusted for field conditions as directed by the engineer. The directional arrow shall be covered or removed when no longer consistent with the side road closure.
6. Advance warning signs shall be omitted on driveways unless otherwise noted.
7. The traffic control and protection for side roads and intersections shall be included in the contract lump sum price for "TRAFFIC CONTROL AND PROTECTION, SPECIAL."

MODIFIED IDOT DISTRICT ONE SIDE ROAD DETAIL

REVISIONS	DATE
Title Block Revision	8/1/09
Reformat LCDOT Standard	7/15/10
Use of Drums in lieu Type III Barricade	4/22/14

LakeCounty Division of Transportation

APPROVED BY: ANTHONY KHAWAJA
DATE: APRIL 1, 2007

TRAFFIC CONTROL and PROTECTION for SIDEROADS, INTERSECTIONS and DRIVEWAYS

LC7004

TYPICAL APPLICATION OF TRAFFIC CONTROL DEVICES for HIGHWAY CONSTRUCTION, CONTRACT MAINTENANCE and UTILITY OPERATIONS

NOT TO SCALE

3 LANE ROAD SECTION with 2-WAY LEFT TURN LANE

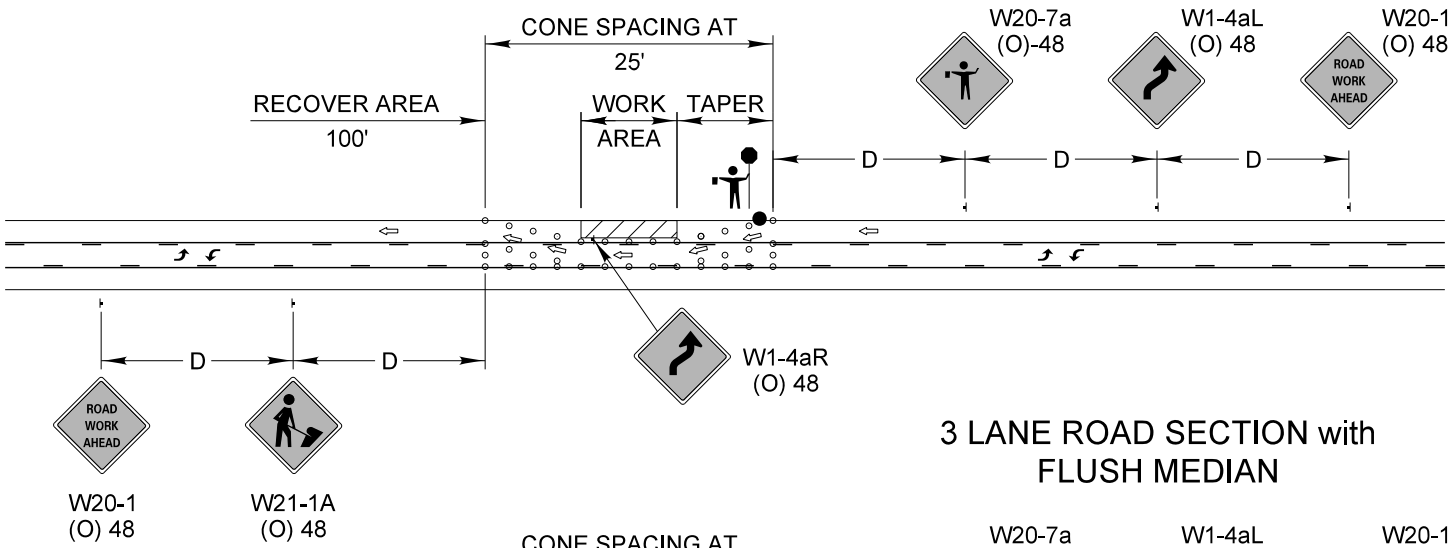

3 LANE ROAD SECTION with FLUSH MEDIAN

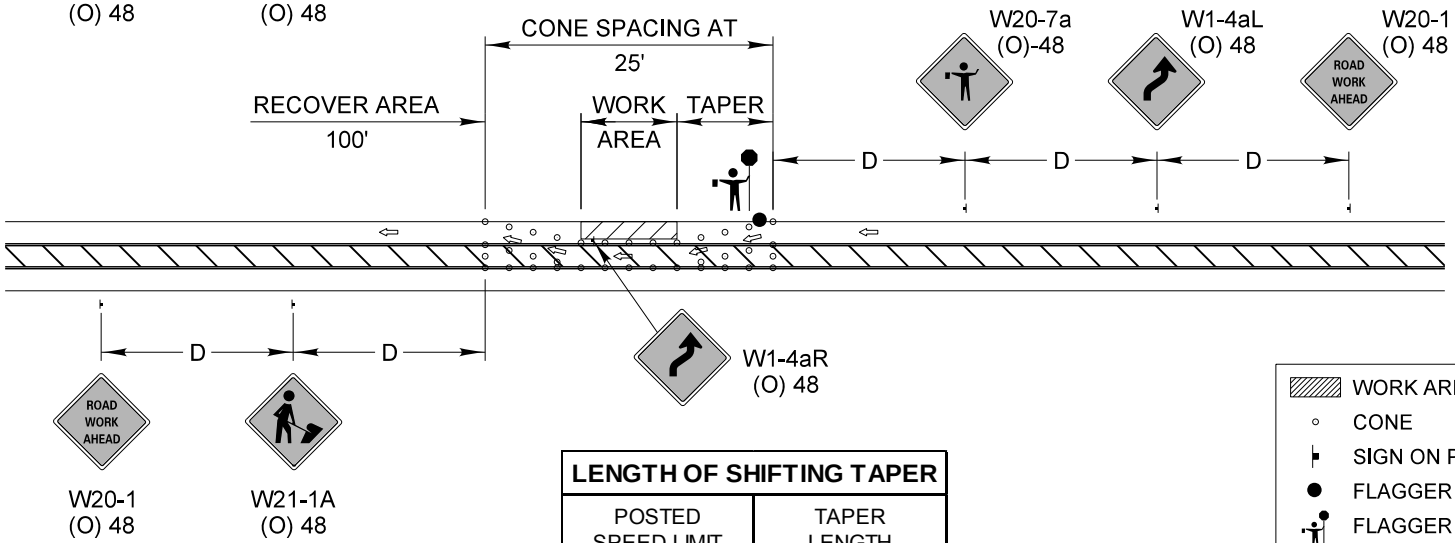

GENERAL NOTE:

This Standard is used where during the day only, any vehicle, equipment, workers or their activities encroach on a 3 lane, two way pavement requiring the closure of one traffic lane.

SYMBOLS

- WORK AREA
- CONE
- SIGN ON PORTABLE OR PERMANENT SUPPORT
- FLAGGER STATION
- FLAGGER WITH SLOW PADDLE

ADVANCE WARNING SIGN SPACING TABLE

POSTED SPEED LIMIT	DISTANCE BETWEEN SIGNS "D"
40 MPH or less	200 FEET
45-50 MPH	350 FEET
55 MPH	500 FEET

LENGTH OF SHIFTING TAPER

POSTED SPEED LIMIT	TAPER LENGTH
30 MPH	100'
35 MPH	125'
40 MPH	150'
45 MPH	275'
50 MPH	300'
55 MPH	325'

REVISIONS	DATE
Title Block Revision	8/1/09
Reformat LCDOT Standard	7/15/10

LakeCounty
Division of Transportation

APPROVED BY: A. KHAWAJA
DATE: APRIL 1, 2007

TYPICAL LANE CLOSURE
3 LANE ROAD SECTION

LC7005

DIRECTION INDICATOR BARRICADES

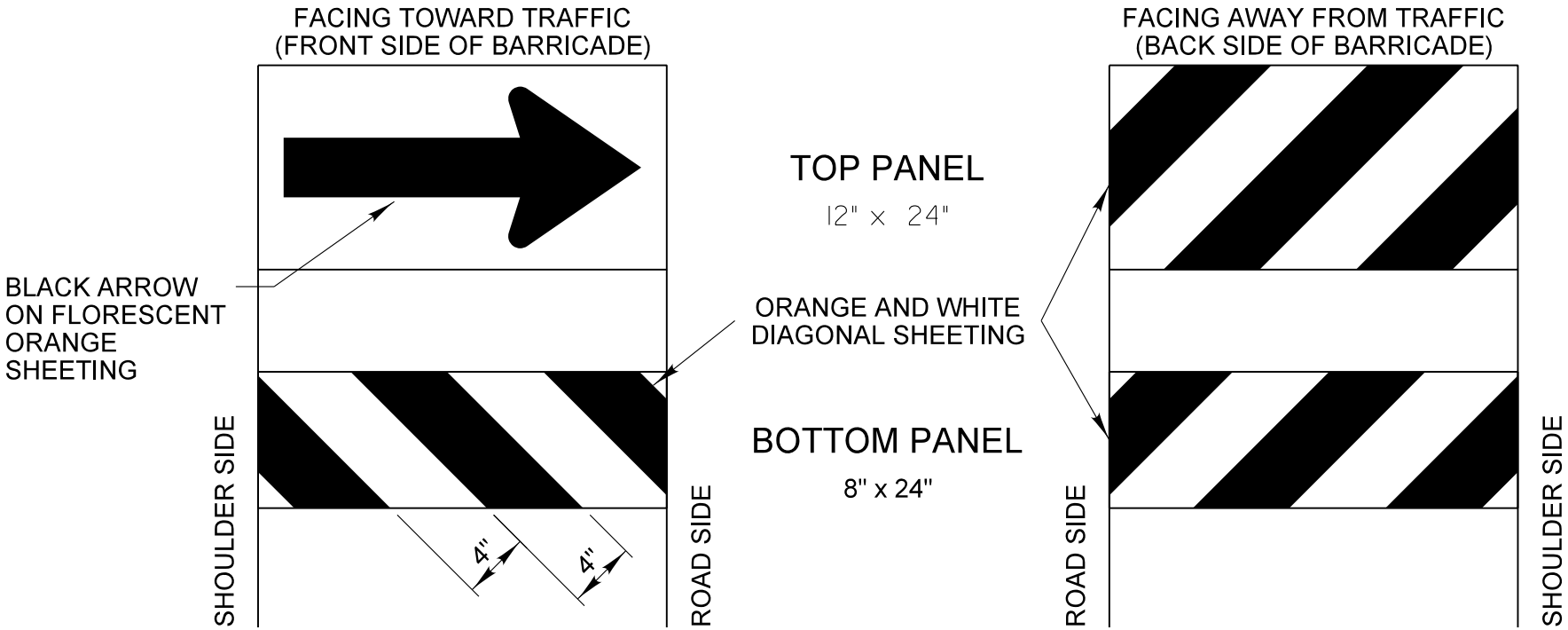

GENERAL NOTES

1) Direction Indicator Barricades shall be constructed from non-metallic Type II barricades meeting the requirements of Article 1106.02 of the Standard Specifications, except where modified by this detail.
2) The Direction Indicator Barricades shall be equipped with Type C steady burning lights if used to channelize traffic during the hours of darkness.
3) The reflective sheeting for the top panel shall be Type AZ fluorescent orange. The diagonal panels shall have orange and white Type A or better reflective sheeting.

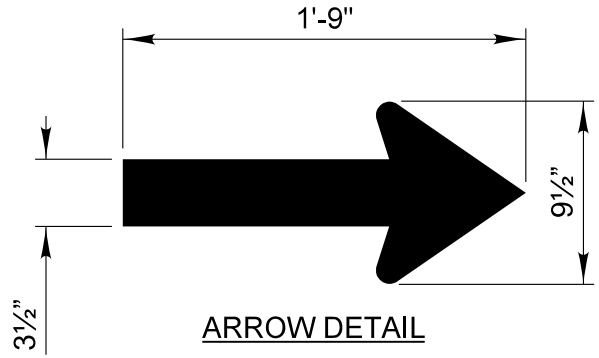

ARROW DETAIL

REVISIONS	DATE
Text Update	7/15/11

LakeCounty
Division of Transportation

APPROVED BY: ANTHONY KHAWAJA
DATE: APRIL 1, 2007

TYPICAL APPLICATION OF TRAFFIC CONTROL DEVICES
HIGHWAY CONSTRUCTION, CONTRACT MAINTENANCE

DIRECTION INDICATOR BARRICADES

LC7200

SPECIAL PROVISION
FOR
CONSTRUCTION DEBRIS

Effective October 18, 1999

Add the following to the third paragraph of Article 202.03 of the Standard Specifications:

"The Contractor shall not conduct any generation, transportation, or recycling of construction or demolition debris, clean or general or uncontaminated soil generated during construction, remodeling, repair, and demolition of utilities, structures, and roads that is not commingled with any waste, without the maintenance of documentation identifying the hauler, generator, place of origin of the debris or soil, the weight or volume of the debris or soil, and the location, owner, and operator of the facility where the debris or soil was transferred , disposed, recycled or treated. This documentation must be maintained by the Contractor for 3 years."

CONSTRUCTION DEBRIS MANIFEST

Ticket No. _____

Contract No._____

Generator _____

Hauler _____ Truck No. _____

Description of Material

_____

_____

_____

_____

_____

_____

_____

Approximate Weight of Material _____

Approximate Volume of Material _____

Disposition of Material: Location: _____

Date: _____

Time: _____

Owner: _____

Operator: _____