Purchasing Division
18 North County Street – 9th Floor
Waukegan, Illinois 60085-4355
Phone 847 377-2929
Fax 847 984-5889

August 23, 2013

ADDENDUM #1
INVITATION FOR BID #13225
EMERGENCY GENERATOR REPLACEMENT FOR ADULT PROBATION AND 911 CENTER
BID Opening Date: September 5, 2013, 2:00 p.m. local time

Please note the following clarifications, revisions, and/or additions to the Bid documents.

1. **Question:** Can a ComEd contact be provided?
   Response: The ComEd contact consulted for questions during design is Ben Kregel, Benjamin.Kregel@ComEd.com, 847-816-5327.

2. **Question:** What is the weight of the existing condenser?
   Response: The approximately weight of the Carrier condenser unit is 2800 lbs.

3. **Question:** Will temporary storage be provided for the condenser unit?
   Response: Bidders are responsible for coordinating the relocation and protection of the condenser unit onsite or on the street with the City of Waukegan.

4. **Question:** Who is responsible for the utility and private locates?
   Response: Bidders will be responsible for including private locates as part of their scope, utility locates will be a direct reimbursement to the contractor, not to be include in the bid price.

5. **Question:** Are there noise restrictions for Adult Probation?
   Response: Yes, the building will remain in business Monday through Friday 8:00 a.m. to 5:00 p.m.

6. **Question:** Are there down time restrictions for Adult Probation?
   Response: Yes, the building will remain in business Monday through Friday 8:00a.m. to 5:00p.m., any power or mechanical HVAC shutdowns will need to be coordinated 14 days in advance of work with Facilities Operations for off business hours.

7. **Question:** Who is responsible for the BACnet controls?
   Response: 911 Building Generator Replacement: Modbus-BACnet gateways are provided by contractor as noted on EP05. No further integration is required, as building automation systems are not present for these facilities.

   Adult Probation Generator Install: Building Automation is present, Bidders will be responsible for building automation integration to the Modbus communication control devices provide by manufacturers equipment. Bidders are to review previous construction drawings and specification, revised construction drawings E001, EP01, and EP02, and Division 25 specifications for entire scope of work required.

8. **Question:** Can Division 25 be clarified?
   Response: The Division 25 Specification contains instructions to both Division 25 and the Equipment Suppliers for the new Generator, Transfer Switch and Moulded Case Circuit Breakers (Trip Units).

a. Equipment Suppliers are expected to provide the Modbus devices for these pieces of equipment so Division 25 can provide the Modbus to BACnet gateway for each device.
b. Section 25 20 26.28.17 Integrated Automation – BACnet Interface Device (Gateways/Native BACnet Devices) – Moulded Case Circuit Breakers (All Types) forms part of the Work for Equipment Suppliers of Moulded Case Circuit Breakers (Trip Units).
c. Section 25 20 26.32 Integrated Automation – BACnet Interface Device (Gateways/Native BACnet Devices) – Packaged Generator Assemblies (All Types) forms part of the Work for Equipment Suppliers of Generators.
d. Section 25 20 26.36 Integrated Automation – BACnet Interface Device (Gateways/Native BACnet Devices) – Transfer Switches (All Types) forms part of the Work for Equipment Suppliers of Transfer Switches.

Clarifications

For the Adult Probation Facility, bidders are to include quantity one (1) replacement breaker for the Carrier chiller, **New 450A P Frame Breaker with 5.0P Trip Unit, Part # S164A**, MOLDED CASE CIRCUIT BREAKER 600V 400A. Bidders are to include quantity one (1) a replacement Micrologic Trip Unit for the Main Breaker. **5.0H Trip Unit for existing P Frame Breaker, part # S173A.** Bidders are to include a new surge protective device (TVSS) for QED-2 Square D switchgear. SPD T1 EMA 160KA 208Y/120V 3P4W.

Bidders are to review revised electrical construction drawings E001, EP01, and EP02 as part of this addendum for complete scope of work.

JCI contact for Division 25 responsibilities at Adult probation Generator install only.

Bill Larkey
Johnson Controls
Account Representative, Service Sales Bld...

(815) 307-5169 Mobile
william.c.larkey@jci.com

3007 Malmo Drive
Arlington Heights, IL 60005

END ADDENDUM #1

PLEASE SIGN THIS FORM AND EMAIL TO PURCHASING@LAKECOUNTYIL.GOV OR FAX TO (847) 984-5889 WITHIN 24 BUSINESS HOURS. RETURN ORIGINAL WITH YOUR BID.

I will be submitting a Bid _____ or
I will not be submitting a Bid because _____
_____

Sincerely,

RuthAnne Hall
Lake County Purchasing Agent

Acknowledged and Accepted 13225-1:

Signature: _____

Company: _____

_____

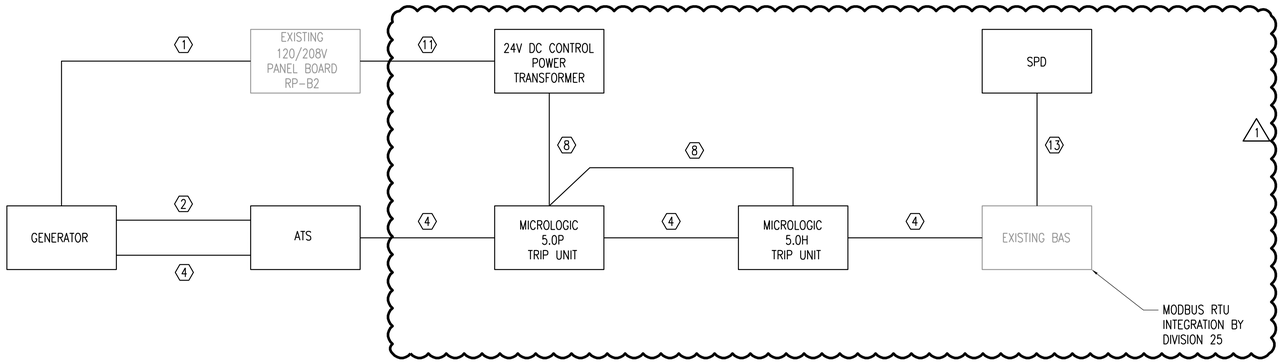

CONTROL, COMMUNICATIONS, AND AUX POWER WIRING BLOCK DIAGRAM

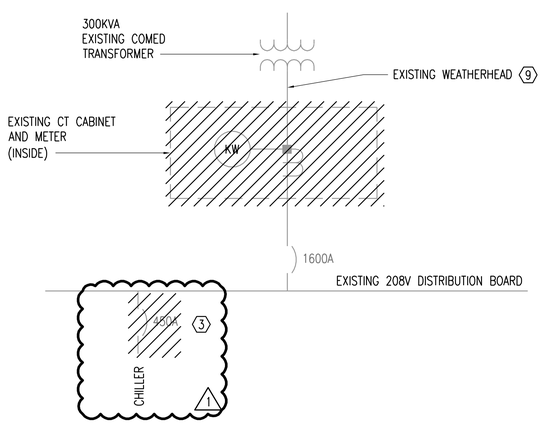

EXISTING ONE LINE

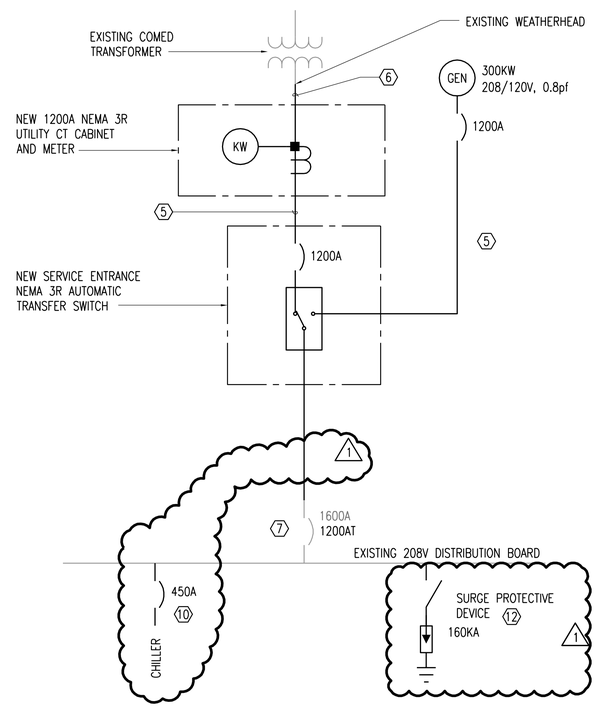

PROPOSED ONE LINE

GENERAL NOTES:

1. COORDINATE DEMOLITION AND CUTOVER OF SERVICE WITH COMED AND OWNER TO MINIMIZE DOWNTIME.
2. ENGINEER WILL FURNISH SETTINGS FOR BREAKERS. CONTRACTOR SHALL IMPLEMENT FURNISHED SETTINGS.

KEYED NOTES:

1. PROVIDE 1-POLE 30A BREAKER FOR GENERATOR BATTERY CHARGER, HEATERS, AND CONTROL POWER. PROVIDE 2 - #8 AND 1 - #8 GND. EXTERIOR DUCT AS SPECIFIED IN DUCT BANK SECTION. INTERIOR CONDUIT SHALL BE 3/4" EMT. EXTERIOR ABOVE-GRADE CONDUIT SHALL BE RGS.
2. GENERATOR START COMMAND. 2 - #14 AND 4-#14 SPARE. RUN IN SAME DUCT AS GENERATOR AUX POWER BETWEEN ATS AND GENERATOR.
3. REMOVE EXISTING CHILLER BREAKER.
4. RS-485 TWISTED SHIELDED PAIR IN 2" DUCT (UNDERGROUND), 2" RGS (EXTERIOR ABOVE-GRADE), AND 3/4" BLUE-COLORED EMT (INDOORS) IN DEDICATED RACEWAY. DAISY CHAIN BETWEEN GENERATOR, ATS, AND MICROLOGIC TRIP UNITS.
5. PROVIDE 3 SETS 4-1/C 600kcmil AND #3/0 GND IN 3.5" DUCT AND RGS.
6. PROVIDE 3 SETS 4-1/C 600kcmil AND #3/0 GND IN 3.5" RGS. COORDINATE LINE TERMINATION WITH UTILITY.
7. REPLACE TRIP UNIT IN EXISTING SQUARE D POWERPACT RG BREAKER WITH NEW MICROLOGIC 5.0H TRIP UNIT AND MODBUS COMMUNICATION MODULE.
8. PROVIDE 2-#14 IN 3/4" EMT FOR DC CONTROL POWER.
9. IN COORDINATION WITH COMED, PULL UTILITY CABLES FROM SWITCHBOARD BACK TO WEATHERHEAD. REUSE AND RE-TERMINATE UTILITY CABLES AT NEW UTILITY CT CABINET.
10. PROVIDE SCHNEIDER ELECTRIC POWERPACT P-FRAME MOLDED CASE CIRCUIT BREAKER WITH MICROLOGIC 5.0P TRIP UNIT, 600AF/450AT, 65KAIC @ 240V, AND MODBUS COMMUNICATION MODULE.
11. PROVIDE 1-POLE 15A BREAKER, 2-#12 AND 1-#12 FOR CONTROL POWER TRANSFORMER. PROVIDE CONTROL POWER TRANSFORMER AND RECTIFIER WITH PROTECTIVE FUSING ON INPUT AND OUTPUT, ALL IN A NEMA 1 WALL-MOUNT ENCLOSURE.
12. PROVIDE QED-2 MOUNTED SCHNEIDER ELECTRIC SURGELOGIC SPD. RELOCATE BRANCH BREAKERS AND SPLICE FEEDERS AS NECESSARY.
13. PROVIDE 2-#14 IN 3/4" EMT FOR SURGE COUNTER.

LICENSED PROFESSIONAL ENGINEER
STEVEN R. KOSS
062-059958
STATE OF ILLINOIS

EXP. DATE 11-30-13

NO.	REVISIONS	DWN	APVD	APVD	DATE
1	ADDENDUM 1	BK	SK	MZ	8/21/13

Stanley Consultants INC.
8501 West Higgins Road, Suite 730, Chicago, Illinois 60631-2801
www.stanleyconsultants.com

STANDBY GENERATOR FOR LAKE COUNTY
ADULT PROBATION BUILDING
WAUKEGAN, ILLINOIS

ONE LINE
AND CONTROLS
Illinois Firm Registration No.: 184-001533

DESIGNED S. KOSS
DRAWN B. KOWALCZYKOWSKA
CHECKED M. ZARGAR
APPROVED M. ZARGAR
APPROVED
DATE 03-22-2013

SCALE: NO SCALE
NO. 23934.01.00
E001
REV. 1

© STANLEY CONSULTANTS

Prj: 23934.01 C:\projects\datasource-1\common\d0107049\13_2393401_E001.dwg
CADD D1-R3

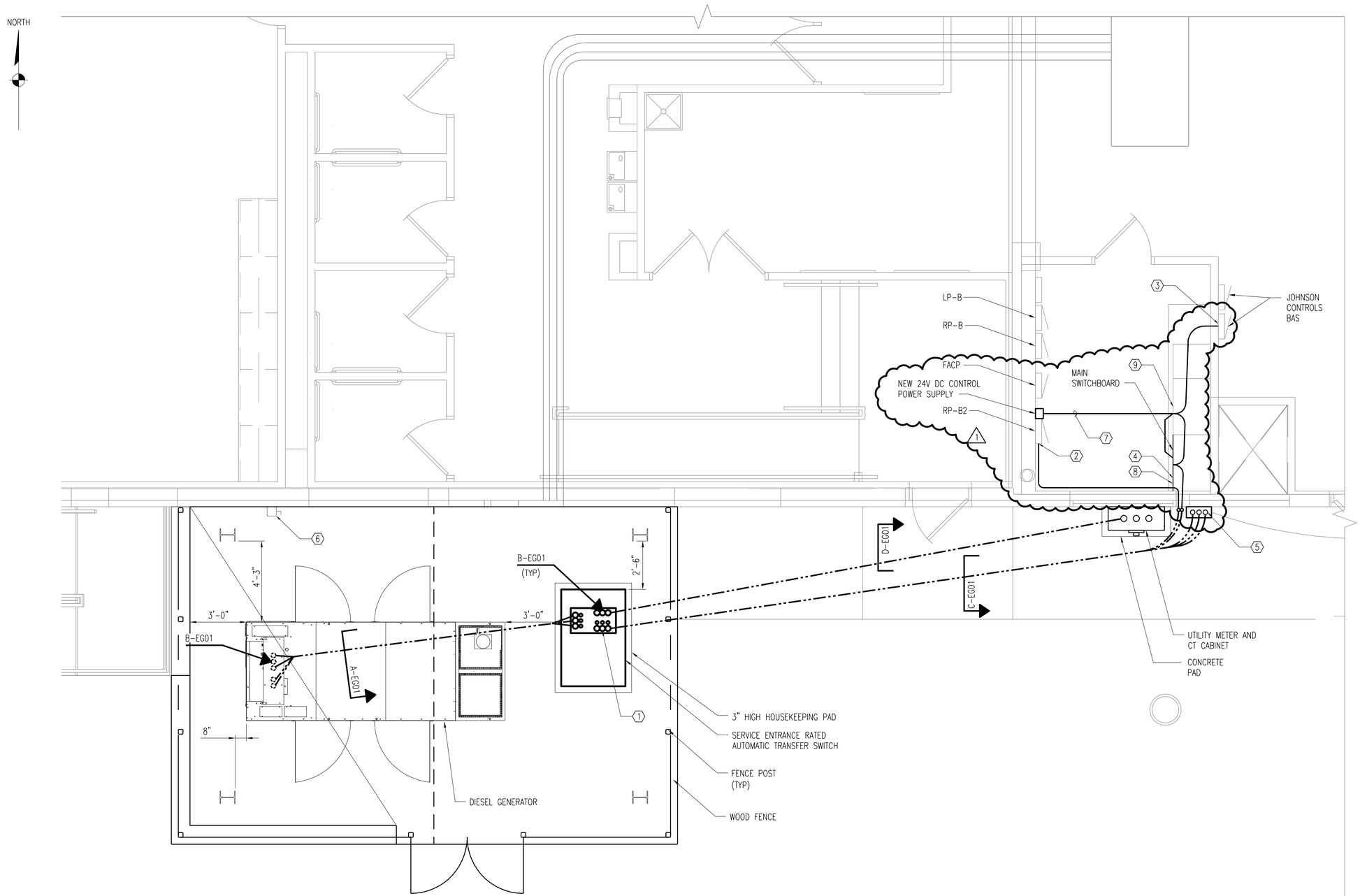

SITE PLAN
SCALE: 3/8" = 1'-0"

GENERAL NOTES:

1. COORDINATE DEMOLITION AND CUTOVER OF SERVICE WITH COMED AND OWNER TO MINIMIZE DOWNTIME.

KEYED NOTES: ⬡

1. PULL THE GENERATOR AUX POWER THROUGH THE BASE OF THE ATS TO THE GENERATOR.
2. PROVIDE GENERATOR AUX POWER CIRCUIT FROM RP-B2. SEE E001 FOR CIRCUIT DETAILS.
3. PROVIDE RS-485 CABLE DAISY CHAINED FROM GENERATOR ATS, AND TRIP UNITS TO EXISTING BUILDING AUTOMATION SYSTEM PANELS. PROVIDE 2-#14 FROM SPD TO EXISTING BUILDING AUTOMATION SYSTEM PANELS. PROVIDE 10' SLACK FOR TERMINATION BY DIV 25.
4. PROVIDE NEW HINGED SOLID SWITCHBOARD DOOR SECTION TO REPLACE DEMOLISHED CT SECTION DOOR. DOOR SHALL HAVE A PADLOCKABLE HANDLE, BE SAME GAUGE AS THE REST OF THE SWITCHBOARD CONSTRUCTION, AND POWDER COAT PAINTED TO MATCH.
5. PULL NEW LOAD FEEDERS FROM ATS THROUGH NEW JUNCTION BOX INTO TOP OF EXISTING SWITCHBOARD. TERMINATE ON LINE SIDE OF EXISTING SWITCHBOARD MAIN BREAKER (PROVIDING LUGS AS NECESSARY).
6. PROVIDE NEW CIRCUIT FROM LOAD SIDE OF EXISTING DISCONNECT SWITCH TO RELOCATED CONDENSING UNIT. PROVIDE CABLE IN IMC CONDUIT TO MATCH EXISTING CONDUIT SIZE AND CABLE QUANTITY SIZE AND TYPE.
7. PROVIDE CONTROL POWER TO TRIP UNITS AS SHOWN ON E001.
8. PROVIDE NEW TRIP UNIT FOR EXISTING BREAKER AS SHOWN ON E001.
9. PROVIDE NEW CHILLER BREAKER AND TRIP UNIT AND SPD AS SHOWN ON E001.

1

LICENSED PROFESSIONAL ENGINEER
STEVEN R. KOSS
062-059958
STATE OF ILLINOIS

EXP. DATE 11-30-13

NO.	REVISIONS	DWN	APVD	APVD	DATE
1	ADDENDUM 1	BK	SK	MZ	08/21/13

Stanley Consultants INC.
8501 West Higgins Road, Suite 730, Chicago, Illinois 60631-2801
www.stanleyconsultants.com

STANDBY GENERATOR FOR LAKE COUNTY
ADULT PROBATION BUILDING
WAUKEGAN, ILLINOIS

ELECTRICAL SITE PLAN

Illinois Firm Registration No.: 184-001533

DESIGNED S. KOSS
DRAWN B. KOWALCZYKOWSKA
CHECKED M. ZARGAR
APPROVED M. ZARGAR
APPROVED
DATE 03-22-2013

SCALE: AS NOTED
NO. 23934.01.00
REV. 1
EP01

AT FULL SIZE
0 1 2 3 IN
0 1 2 3 4 5 6 7 8 cm

© STANLEY CONSULTANTS

C:\projects\datasource-1\common\d0107049\14_2393401_EP01.dwg
Prj: 23934.01
CADD D1-R3

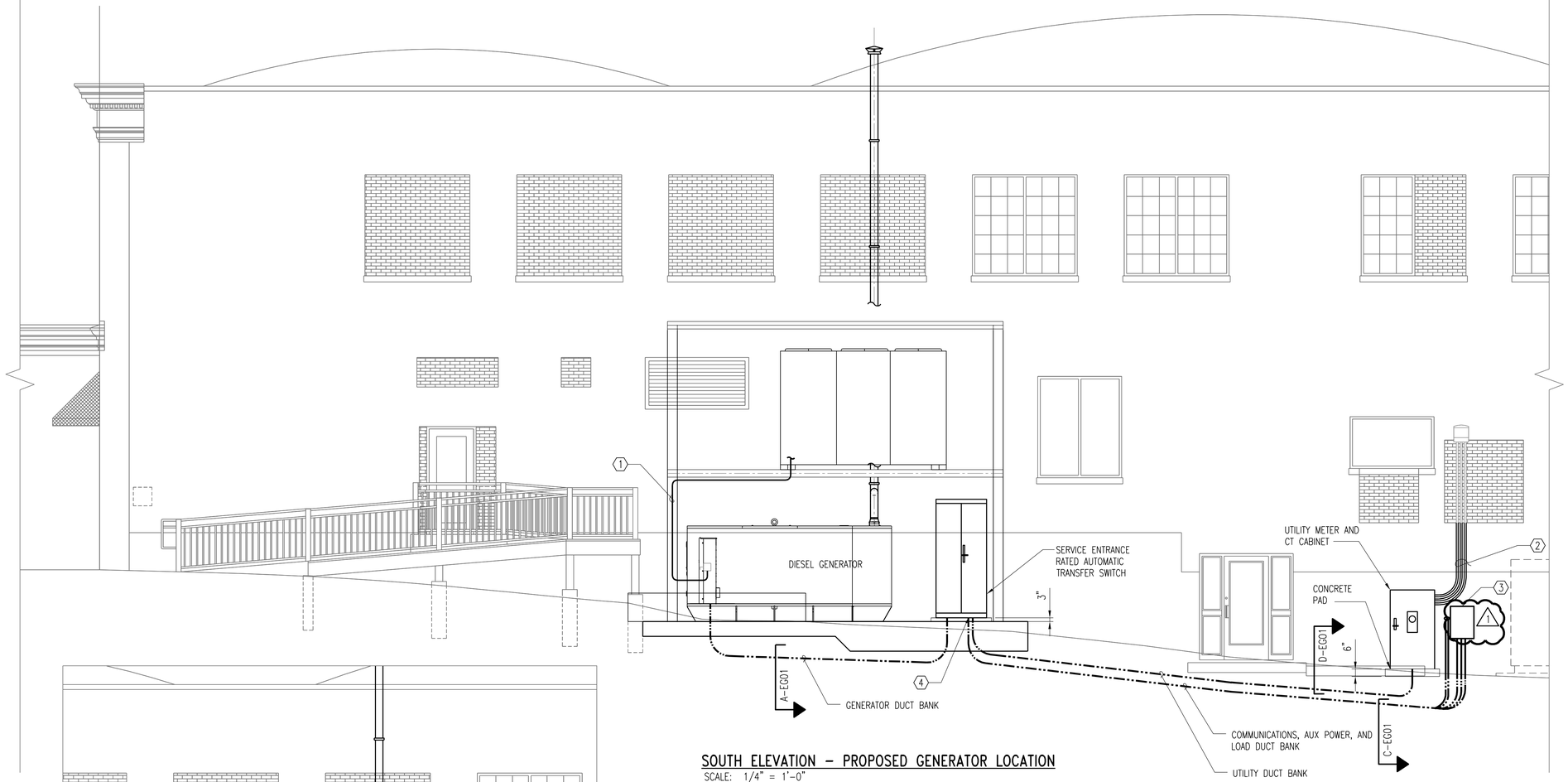

SOUTH ELEVATION – PROPOSED GENERATOR LOCATION

SCALE: 1/4" = 1'-0"

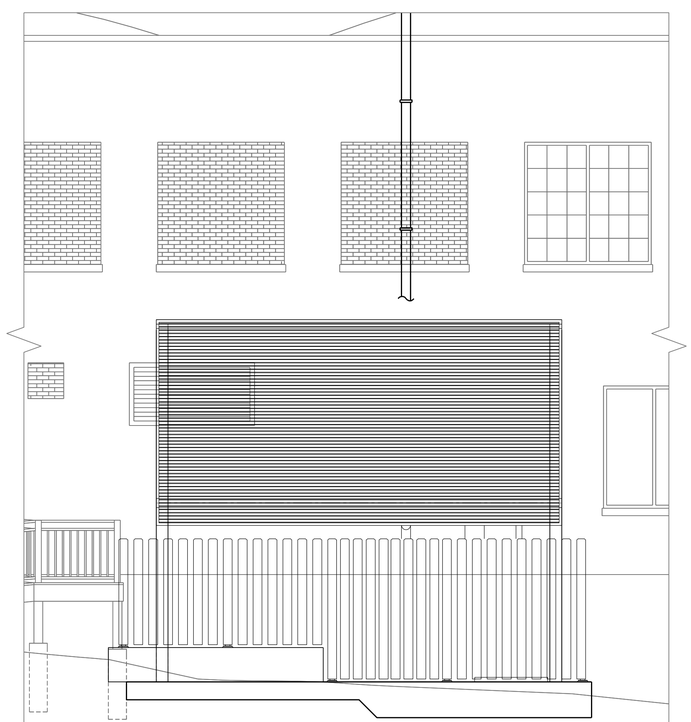

SOUTH ELEVATION – PROPOSED FENCE AND LOUVERS

SCALE: 1/4" = 1'-0"

GENERAL NOTES:

1. COORDINATE DEMOLITION AND CUTOVER OF SERVICE WITH COMED AND OWNER TO MINIMIZE DOWNTIME.

KEYED NOTES:

1. PROVIDE NEW CIRCUIT FROM LOAD SIDE OF EXISTING DISCONNECT SWITCH TO RELOCATED CONDENSING UNIT. PROVIDE CABLE IN IMC CONDUIT TO MATCH EXISTING CONDUIT SIZE AND CABLE QUANTITY SIZE AND TYPE.
2. PROVIDE NEW RGS CONDUIT OF SIZE NOTED ON E001 FROM WEATHERHEAD TO NEW CT CABINET.
3. PROVIDE NEW STAINLESS STEEL NEMA 3R OR 4 JUNCTION BOX SIZED PER NEC 314.28.
4. PULL GENERATOR COMMUNICATIONS AND AUX POWER THROUGH BASE AT ATS AND CONTINUE TO GENERATOR.

LICENSED PROFESSIONAL ENGINEER
STEVEN R. KOSS
062-059958
STATE OF ILLINOIS

EXP. DATE 11-30-13

NO.	REVISIONS	DWN	APVD	APVD	DATE
1	ADDENDUM 1	BK	SK	MZ	08/21/13

Stanley Consultants INC.
8501 West Higgins Road, Suite 730, Chicago, Illinois 60631-2801
www.stanleyconsultants.com

STANDBY GENERATOR FOR LAKE COUNTY
ADULT PROBATION BUILDING
WAUKEGAN, ILLINOIS

ELECTRICAL SITE ELEVATION

Illinois Firm Registration No.: 184-001533

DESIGNED S. KOSS
DRAWN B. KOWALCZYKOWSKA
CHECKED M. ZARGAR
APPROVED M. ZARGAR
APPROVED
DATE 03-22-2013

SCALE: AS NOTED
NO. 23934.01.00
EP02
REV. 1

AT FULL SIZE
0 1 2 3 IN
0 1 2 3 4 5 6 7 8 cm

© STANLEY CONSULTANTS

Prj: 23934.01 C:\projects\datasource-1\common\d0107049\15_2393401_EP02.dwg
CADD 03-R3

Lake County
Bid# 13225
Lake County Emergency Generator for Adult Probation
08-19-2013

All Division 25 Contract Documents are copyrighted by APPIN Associates. They are considered proprietary documents and shall not be duplicated by any means. Additional copies are available to approved Contractors for use during the Bid period or during the Work.

TABLE OF CONTENTS

25 00 01 Integrated Automation – General Requirements – Division 25 Bid Submittal Checklist 1
25 00 02 Integrated Automation – General Requirements – Division 25 Procurement Definitions 2
25 00 11 Integrated Automation – General Requirements – Division 25 Summary Of Work 3
25 00 33 Integrated Automation - General Requirements - Submittal Procedures 8
25 00 42 Integrated Automation - General Requirements - References 15
25 00 77 Integrated Automation - General Requirements - Closeout Procedures 22
25 00 78 Integrated Automation - General Requirements - Closeout Submittals 24
25 00 79 Integrated Automation – General Requirements - Demonstration & Training 29
25 05 01 Integrated Automation - Common Work Results - General 31
25 05 13 Integrated Automation - Common Work Results - Conductors & Cables 34
25 05 26 Integrated Automation - Common Work Results - Grounding & Bonding 35
25 05 28 Integrated Automation - Common Work Results - Pathways 36
25 05 53 Integrated Automation – Common Work Results - Identification 37
25 08 00 Integrated Automation - Controls Commissioning 40
25 13 16 Integrated Automation - Control & Monitoring Network - Integration Panels/Devices 44
25 15 11 Integrated Automation - Operator Workstation Software 48
25 20 26.28.17 Integrated Automation – BACnet Interface Device (Gateways/Native BACnet Devices) –Moulded Case Circuit Breakers (All Types) 49
25 20 26.32 Integrated Automation – BACnet Interface Device (Gateways/Native BACnet Devices) – Packaged Generator Assemblies (All Types) 61
25 20 26.36 Integrated Automation – BACnet Interface Device (Gateways/Native BACnet Devices) – Transfer Switches (All Types) 149
25 25 26.24.02 Integrated Automation – Wired Connection – SPD (TVSS) (All Types) 188

-○O○-

25 00 01 INTEGRATED AUTOMATION – GENERAL REQUIREMENTS – DIVISION 25 BID SUBMITTAL CHECKLIST

1 - GENERAL

1.01 General Conditions

1.01.1 The intent of this section is to provide Bidder(s) with a clear understanding of what information the Bidder must submit.

1.01.2 Bidders shall submit written documentation (schedules, brochures and other documents required) by the date shown in the Bid Documents.

1.01.3 Co-ordinate the Work of this Division with Work outlined in the Stanley Consultants Project Manual.

1.02 Submissions

1.01.1 Bidders shall complete the Submissions listed below in order for the Bid to be accepted.

1.01.1.1 Pricing
1.01.1.2 Network Architecture Block Diagrams Showing Panel Layouts
1.01.1.3 Controls System Warranty
1.01.1.4 Project Work Plan
1.01.1.5 BAS System Server Software Supplied
1.01.1.6 Spare Parts List
1.01.1.7 Inter-connection to equipment provided with integrated controls interface. Controls Contractor is responsible for providing an acceptable BACnet Interface Device Object List based on the Modbus Devices provided by the Equipment Suppliers.
1.01.1.8 Other items listed throughout the Contract Documents

2 - PRODUCTS

Not Used

3 - EXECUTION

Not Used

End of Section

25 00 02 INTEGRATED AUTOMATION – GENERAL REQUIREMENTS – DIVISION 25 PROCUREMENT DEFINITIONS

1 - GENERAL

1.01 Definitions

1.01.1 The following definitions apply throughout the Specification:

1.01.1.1 References to the "Contractor", "BAS Contractor" or "Controls Contractor" in this Specification are to the General Contractor or the responsible Subcontractor who is integrating the various BACnet Interface Devices to the Equipment Suppliers' Modbus Devices together into one common Front End., per the terms and conditions of the Contract Documents.

1.01.1.2 References to the "Controls Consultant" are to Appin Associates who is responsible for the BACnet Device Interface integration as outlined in this Specification.

1.01.1.3 Reference to "Modbus Device" or "Modbus Devices" are to the devices that are provided by the Equipment Suppliers.

1.01.1.4 References to "BACnet Interface Device" or "BACnet Interface Device Panel" or "BAS panels" are to Building Automation System (BAS) BACnet Interface Device or Devices. The Contractor is responsible for integrating the these devices together so there is only one BACnet/IP interface to all the Modbus Devices provided by the Equipment Suppliers in the Work. There shall be no requirement for the Owner to make separate connections to control any individual piece of equipment provided as part of the Work.

1.02 Recognized Controls Contractors

1.02.1 The following BAS Contractors are permitted to submit on this Bid.

1.02.1.1 Johnson Controls.

2 - PRODUCTS

Not Used

3 - EXECUTION

Not Used

End of Section

25 00 11 INTEGRATED AUTOMATION – GENERAL REQUIREMENTS – DIVISION 25 SUMMARY OF WORK

1 - GENERAL

1.01 General Conditions

1.01.1 The Specification shall be read as a whole by all parties concerned. Sectioning of the Specification is for convenience only; each section may contain less or more than the completed Work of any trade. The Contractor is solely responsible to understand the scope of Work, and make clear to Subcontractors the extent of their Work in this section.

1.01.2 Sections of these Specifications are not intended to delegate functions or to delegate Work and supply to any specific trade. The Work shall include all labour, materials, equipment and tools required for a complete and working installation as described in the Drawings and these Specifications.

1.01.3 Perform all Work as outlined herein and shown on the Drawings and outlined in the Specifications. Provide all materials, tools and labour to complete the installation and commission the Work, to the satisfaction of the Owner.

1.01.4 The Work shall be performed by skilled technicians under the direction of experienced project managers/co-coordinators, all of whom shall be properly trained and qualified for this Work.

1.01.5 Improper installation or erection of products or supplying and installing unapproved materials, due to failure in complying with the requirements outlined in the Contract Documents, authorizes the Owner to require removal and re-installation at no additional cost for the Work.

1.01.6 Contract Documents include all Specifications, Drawings and other Contract Documents prepared for the Work.

1.01.7 Where an instruction is given in a clause of these Specifications and it is not obvious to whom the instruction has been given, it shall be deemed to be an instruction given to the Contractor(s) responsible for the Work in this Division.

1.01.8 Where a list of items to be provided is given in the Specifications, the Contractor shall provide all items listed (i.e., the items listed in a series of subclauses).

1.01.9 In this Division Provide means to supply, install, connect and set system to operate to the satisfaction of the Engineer. If commissioning is specified, Contractor shall commission system as specified, to fulfil the intended function to the satisfaction of the Owner.

1.01.10 Unless otherwise stated, all references in this Specification to the Contractor shall be to the BAS Contractor.

1.01.10.1 The Contractor shall not be allowed to deviate from his proposed system architecture, location of equipment and equipment Specification (as detailed in the Submittals) unless express written approval has been granted by the Controls Consultant.

1.01.11 If no application for deviation or substitution is made prior to installation, all Work and equipment not in compliance with this Specification or approved as an alternate, shall be rejected and shall be rectified at the Contractor's expense.

1.01.12 The Contract Documents shall be interpreted according to the laws of the Place of the Work. The following is the reference to the Place of the Work.

1.01.12.1 Lake County Adult Probation, Waukegan, IL.

1.02 Contractor Work Responsibilities

1.02.1 Supply, install and commission a complete operating BACnet/IP-based Building Automation System (BAS) for the BACnet Interface Devices to the Equipment Suppliers' Modbus Devices listed in the Contract Documents.

1.02.2 This Contractor shall provide a single BACnet/IP User Interface that connects and integrates all BACnet-based control systems provided in the Work.

1.02.2.1 See the individual Specification Sections for equipment that shall come complete with BACnet interfaces to be integrated into the BACnet Internetwork created for the Work.

1.02.2.2 Provide all related auxiliary items required herein, including but not restricted to the following:

1.02.2.2.1 Wiring and conduit.
1.02.2.2.2 Operating and Maintenance Manuals
1.02.2.2.3 All other required equipment as outlined in this Division.

1.02.2.3 The Contractor and the Owner's Controls Consultant will verify communications between each BACnet Interface Device and the Owner's IP client.

1.02.2.4 The Controls Consultant will set conventions for object names that will be applied to the BACnet Interface Devices to the Equipment Suppliers' Modbus Devices.

1.03 Compliance With Code

1.03.1 Perform Work in accordance with national codes including all amendments up to tender closing date and other codes of state or local application provided that in case of conflict or discrepancy, more stringent requirements apply.

1.03.2 Meet or exceed requirements of:

1.03.2.1 Contract Documents

1.03.2.2 Specified standards, codes and referenced documents

1.03.3 Comply with the requirements of the latest edition of the applicable UL standards, the requirements of National, State or local Codes, and all other Authorities Having Jurisdiction. These codes and regulations constitute an integral part of these Specifications.

1.03.4 Submit equipment to the local Electrical Authority for special inspection and obtain approval before delivery of equipment to site where there is no alternative to supply equipment that is UL listed.

1.03.5 In case of conflict, applicable Codes take precedence over the Contract Documents. In no instance reduce the standard or scope of Work or intent established by the Drawings and Specifications by applying any of the codes referred to herein.

1.04 Permits, Fees And Inspections By Authorities

1.04.1 Apply for, obtain and pay for all permits, licenses, inspections, examinations and fees required before starting any Work. Submit any additional information requested by the Authorities Having Jurisdiction. Should the Authorities Having Jurisdiction require the information on specific forms, fill in these forms with the required information.

1.04.2 Before starting any Work, submit the required number of copies of Drawings and Specifications to the Authorities Having Jurisdiction for their approval and comments. Comply with any changes requested as part of the Contract, but notify the Controls Consultant immediately of such changes, for proper processing of these requirements. Prepare and furnish any additional drawings, details or information as may be required.

1.04.3 Arrange for inspection of all Work by the Authorities Having Jurisdiction over the Work. For acceptance for Total Completion, the Contractor must furnish an unconditional Certificate of Acceptance from the Authority Having Jurisdiction.

1.05 Contractor Networking Scope of Work

1.05.1 The Contractor shall provide all communication media, connectors, repeaters, hubs, and routers necessary for the Intranet.

1.05.2 The Contractor shall assume that the Intranet at the Place of Work networks all buildings together using an IP infrastructure by the Owner's IT department. Provide a BACnet Annex J router to pass messages from the Place of Work to the server farm via the Intranet connection on the Intranet.

1.05.2.1 It shall be the Contractor's responsibility to configure each router.

1.05.2.2 Each router shall be configured such that all network layer error messages are directed to a specific Level 0 device using the BACnet ConfirmedTextMessage service.

1.05.2.3 The Contractor shall provide software to manage alarm transmission to the Front End. Add an entry in the Recipient_List and create Notification Class objects to send alarm data to the Front End.

1.05.3 The Contractor is expected to co-ordinate the Work with the Owner.

1.05.3.1 The Owner will assign blocks of IP addresses and BACnet Interface Device instance numbers so there are no address duplications as future BAS systems are installed.

1.05.3.2 Contractor shall co-ordinate network numbering so BAS systems in all buildings can reside on the Owner's Intranet. The Owner will provide a list of acceptable network numbers for the Contractor.

1.05.3.3 It shall be the Contractor's responsibility to initially configure each router with routing tables containing all network numbers that are part of the IP subnet using the specified network numbering scheme for the Work.

1.05.3.4 Broadcasts are not allowed on the Intranet. There are existing BBMDs on the Intranet. This Contractor has a dedicated IP subnet. Configure the BBMD to prevent broadcast "storms".

1.05.3.5 The Owner will provide credentials for the email account used to transmit alarms to a remote wireless device (e.g., cell phone).

1.05.3.6 The Owner will set conventions for object names, graphic layouts and colorization standards that will be applied to this BAS system and all future BAS systems.

1.05.3.7 The Owner has set up an Intranet of BAS systems to segment this traffic from the rest of the traffic at the Place of the Work. This Contractor shall work with the Owner's IT department to connect this BAS system to the Intranet. Contractor is responsible for meeting all security requirements set out by the Owner a user-ID and password can be assigned to allow the Contractor to remotely connect to the Owner's Intranet.

1.05.3.8 Contractor shall co-ordinate selection of MAC addresses so there is no potential for duplication of addresses on the Owner's Intranet. Provide a list of the MAC addresses to be used so the Owner can verify that there are no duplicate MAC addresses.

1.06 Division 25 BACnet Gateway Installation Scope of Work

1.06.1 Systems requiring Division 25 to provide BACnet gateways to integrate non-BACnet Interface Devices provided by others in the Work, shall include, but not be limited to, the following:

1.06.1.1 Generator Modbus to BACnet/IP Interface. It is assumed that the Equipment Supplier has an integral interface to the tank monitoring system.

1.06.1.2 Transfer Switch Modbus to BACnet/IP Interface.

1.06.1.3 Main Breaker Modbus to BACnet/IP Interface.

1.06.1.4 Chiller Breaker Modbus to BACnet/IP Interface.

1.07 Division 25 BACnet Hardwired Points Scope of Work

1.07.1 This Contractor is responsible for connecting to an aux contact at each SPD provided in the Work. Count the pulses from these aux contacts and map this data to an Integer Value Object Type for display by ALC Chicago.

1.08 Division 25 BACnet Interface Device Integration Scope of Work

1.08.1 Systems requiring a network connection to a BACnet Interface Device to the Equipment Supplier's Modbus Deviceprovided by others shall include, but not be limited to, the following:

1.08.1.1 Not required as it assumed that all devices listed in this Specification are Modbus Devices.

1.09 Requirements for Control Panel Devices Provided by Division 25

1.09.1 Level 0 Software Requirements

1.09.1.1.1 References to *"Front End"* are to a BACnet-based proprietary graphics creation/configuration and device programming tool that runs on a computer that shall provide the required trending, alarming and scheduling requirements.

1.09.1.1.1.1 There is no requirement for Division 25 to install a Front End for the BACnet Interface Device. This Work will be provided by ALC Chicago outside of the Contract Documents for this project.

1.09.1.1.1.2 Division 25 is responsible for providing information as outlined in this Division as Submittals so ALC Chicago can create graphics, trends, schedules and alarms using their Front End software.

1.09.1.1.2 In addition, the Contractor shall provide all BAS programming, documentation, etc. supplied/developed in this project for installation on the existing Web Server provided by ALC Chicago.

1.09.1.1.3 The Contractor shall provide extended trending on all hardware inputs, hardware outputs, feedback points and setpoints at the Level 0 device.

1.09.1.2 Contractor is responsible for providing an account and a password to the supplier of any BACnet MS/TP or IP device provided as part of the Work so the supplier can view and change parameters of objects for that device. Access is restricted to the graphics, trends, alarms and schedules created for the device or devices provided in the Work. Contractor shall provide an audit log of any transactions for review by the Owner. Contractor is not responsible for any equipment damage or problems as a result of the actions taken by the equipment supplier.

1.09.1.3 Contractor is responsible for providing up to 10 accounts and passwords to Owner. The Owner will provide the access rights for each account. Contractor shall provide an audit log of any transactions for

review by the Owner. Contractor is not responsible for any equipment damage or problems as a result of the actions taken by the Modbus Device equipment supplier.

1.09.2 Level 1/1A Device Locations and Requirements

1.09.2.1 Contractor shall provide a Level 1 device at the following locations:

1.09.2.1.1 In the Mechanical Room to provide the BACnet/IP interface for all the controls Work in this building.

1.09.2.1.1.1 The device must be sized to handle the throughput of a minimum of 5,000 objects.
1.09.2.1.1.2 This device shall come with a local display device attached to it or as an outboard BACnet MS/TP device that is part of the BAS panel MS/TP network.

1.10 Division 25 Contractor Execution Scope of Work

1.10.1 The Contractor must run all wiring in conduit. Wiremould may only be used with written permission of the Owner.
1.10.2 All other electrical and related Work not specified in other sections of this Specification is within the Controls Contractor's Scope of Work and is the responsibility of the Controls Contractor to provide.
1.10.3 All electrical control wiring supplied in this Section, including interlock wiring below 50 V required for the Work, except where otherwise noted, shall be provided by the Controls Contractor. Contractor shall provide wire and conduit to each BAS device. BAS devices shall be mounted in new device enclosures (tub).
1.10.4 All wiring in "wet" locations shall be wired to satisfy watertight wiring requirements (see specification and construction drawings for additional details).
1.10.5 The Contractor is responsible for providing equipment or protection of equipment that is suitable to the environment in the Work.
1.10.6 Allow for in-situ approval of new devices if required by the Authority Having Jurisdiction.
1.10.7 The Specification may include Control Sequences which require additions and alterations to the mechanical systems or electrical systems (e.g., addition of Hand-Off-Autos (HOAs)) in order to achieve the control strategy outlined in the Control Sequences Sections. The Contractor is responsible for identifying such Work to be done that is outside the scope of this Specification.

1.11 Division 25 Contractor Testing, Adjusting and Balancing (TAB) Scope of Work

1.11.1 Not required.

1.12 Division 25 Contractor Commissioning Scope of Work

1.12.1 Provide a complete commissioning and performance test in the presence of the Owner(s) per Section 25 08 00. The Contractor is responsible for reviewing the Owner's Commissioning Plan Contract Documents to determine Work requirements. These Work requirements include but are not limited to:

1.12.1.1 Interconnections to and commissioning the connections to the Generator, Transfer Switch and other equipment shown in the Contract Documents.
1.12.1.2 Allow for on-site time to co-ordinate this Work with other trades
1.12.1.3 Assisting the Mechanical Contractor with start-up of devices under BAS control

1.12.2 The Controls Subcontractor shall provide a written guarantee to the Owner, consistent with the project-specific General Conditions, stating that the Work provided under this Section is guaranteed against faulty material and workmanship for a period of one (1) year after Final Completion.
1.12.3 The Controls Contractor is responsible for working with other trades (particularly Mechanical and Electrical) to co-ordinate Work and to resolve construction problems. Co-ordinate the interconnections to and commissioning of the connections to BACnet-based controllers integrated into equipment supplied by other Divisions. Allow for on-site time to co-ordinate this Work with other trades.
1.12.4 The Contractor is responsible for providing the necessary staff and equipment so the BAS system shall be ready for the projected start-up date shown in the Contract Documents.

1.13 BACnet Interface Device Scope of Work

1.13.1 The list of devices that make up the Work include the following. This is a brief summary of the Work requirements. See the individual Specification Sections for details:

1.13.1.1 25 20 26.28.17 Moulded Case Circuit Breakers

1.13.1.1.1 There are two Moulded Case Circuit Breakers that are being added by the Owner. One is for the Main Breaker. The other is for the Chiller Breaker. Contractor is responsible for providing a

BACnet/IP connection to the device that is acting as the BACnet/IP interface to the Modbus/RTU interface.

1.13.1.1.2 Contractor is responsible for reporting alarms and for creating trends. Report the start of the generator as a critical alarm. The Owner will provide the Recipient List. There is no scheduling requirement.

1.13.1.2 25 20 26.32 Generator:

1.13.1.2.1 There is one Generator that is being added by the Owner. Contractor is responsible for providing a BACnet/IP connection to the device that is acting as the BACnet/IP interface to the Modbus/RTU interface.

1.13.1.2.2 Contractor is responsible for reporting alarms and for creating trends. Report the start of the generator as a critical alarm. The Owner will provide the Recipient List. There is no scheduling requirement.

1.13.1.3 25 20 26.36 Transfer Switch:

1.13.1.3.1 There is one Transfer Switch that is being added by the Owner. Contractor is responsible for providing a BACnet/IP connection to the device that is acting as the BACnet/IP interface to the Modbus/RTU interface.

1.13.1.3.2 Contractor is responsible for reporting alarms and for creating trends. Report the start of the generator as a critical alarm. The Owner will provide the Recipient List. There is no scheduling requirement.

1.14 Contractor Commissioning Scope of Work

1.14.1 Contractor shall commission all Work per the Specification requirements.

1.15 Warranty Requirements

1.15.1 The Controls Subcontractor shall provide a written guarantee to the Owner, consistent with the project-specific General Conditions, stating that the Work provided under this Section is guaranteed against faulty material and workmanship for a period of one (1) year after Final Completion.

1.16 Work By Others

1.16.1 There is no Work by others. All Work shown in the Responsibility Matrix is by this Contractor.

Responsibility Matrix				
Work	**Furnish**	**Install**	**Low Volt Wiring**	**Line Power**
Modbus Device ready for integration as as BACnet Interface Device	Equipment Supplier			
BACnet Interface Device low voltage and communication wiring	This Contractor			
Controls low voltage and communication wiring (excluding IP drops, which are by Owner).	This Contractor			
BACnet Interface Device conduits	This Contractor			
BACnet Interface Device equipment, housings and enclosures.	This Contractor			

2 - PRODUCTS

Not Used

3 - EXECUTION

Not Used

End of Section

25 00 33 INTEGRATED AUTOMATION - GENERAL REQUIREMENTS - SUBMITTAL PROCEDURES

1 - GENERAL

1.01 Administrative

1.01.1 Submit to Owner Submittals listed for review. During construction, submittals may include the following:

1.01.1.1 Contract schedule
1.01.1.2 Submittal schedule
1.01.1.3 Shop drawings, product data, and samples
1.01.1.4 Test reports
1.01.1.5 Materials and equipment substitution requests
1.01.1.6 Permits and Certifications
1.01.1.7 Calculations
1.01.1.8 Qualifications of installers

1.01.2 Submit promptly and in orderly sequence to not cause delay in Work. Failure to submit in ample time is not considered sufficient reason for extension of Contract Time and no claim for extension by reason of such default shall be allowed.
1.01.3 Do not proceed with Work affected by Submittal until review is complete.
1.01.4 Present Shop Drawings, product data, samples and mock-ups in SI Metric units.
1.01.5 Where items or information is not produced in SI Metric units converted values are acceptable.
1.01.6 Review Submittals prior to submission to Owner. This review represents that the Contractor has determined and verified materials, field measurements, and field construction criteria related thereto, or will do so, and has checked and co-ordinated the information contained within such Submittals with the requirements of the Work and of the Contract Documents.. Submittals not stamped, signed, dated and identified as to specific project shall be returned without being examined and considered rejected.
1.01.7 Notify Owner, in writing at time of submission, identifying deviations from requirements of Contract Documents stating reasons for deviations.
1.01.8 Contractor's responsibility for errors and omissions in Submission is not relieved by Owner's review of submittals.
1.01.9 Contractor's responsibility for deviations in submission from requirements of Contract Documents is not relieved by Owner's review.
1.01.10 Keep one reviewed copy of each Submittal on site.

1.02 Shop Drawings and Product Data

1.02.1 The term "Shop Drawings" means drawings, diagrams, illustrations, schedules, performance charts, brochures and other data which are to be provided by Contractor to illustrate details of a portion of Work. Do not assume applicable catalogues are available in the Owner's Office. Maintenance and Operating Manuals alone are not suitable submittals as Shop Drawings.
1.02.2 Take full responsibility for securing and verifying field dimensions. In instances where fabrication must proceed prior to field dimensions being available, use all available Drawings and product data for dimensional information. Guarantee that dimensions shall be worked to and ensure that other trades are aware of these dimensions and shall comply with them.
1.02.3 Where articles or equipment attach or connect to other articles or equipment, indicate that such items have been co-ordinated, regardless of Division under which adjacent items will be supplied and installed. Indicate cross references to design drawings and Specifications. Clearly show Division of responsibility. No item, equipment or description of Work shall be indicated to be supplied or Work to be done "By Others" or "By Purchaser". Any item, equipment or description of Work shown on Shop Drawings shall form part of the Agreement between the Contractor and the Owner, unless specifically noted to the contrary.
1.02.4 Clearly mark each sheet of printed submittal material (e.g., using arrows, underlining or circling) to show particular sizes, types, model numbers, ratings, pressure drops, capacities, performance and factory available options actually being proposed. Cross out non-applicable material. Note specified features on the submittal. Note on the submittal specified requirements such as special tank linings, pump seals, materials or painting.

1.03 Submittals

1.03.1 Submit Shop Drawings for equipment having long ordering times within ten (10) days of Contract award to expedite delivery of this equipment. Other than this exception, piecemeal submittal of Shop Drawings is not

accepted. Submit Shop Drawings in a timely manner for all equipment so that the Total Completion of the Work can be completed by the deadline specified in the Contract Documents. While the Owner shall review the drawings in a timely manner, Contractor shall allow a minimum of fourteen (14) working days for review by the Owner.

1.03.2 Accompany Submittals with Transmittal Letter, in duplicate, containing:

1.03.2.1 Date
1.03.2.2 Project title and number
1.03.2.3 Contractor's name and address
1.03.2.4 Identification and quantity of each Shop Drawing, product data and sample
1.03.2.5 Other pertinent data

1.03.3 Submittals shall include:

1.03.3.1 Date and revision dates
1.03.3.2 Project title and number
1.03.3.3 Name and address of:

1.03.3.3.1 Subcontractor
1.03.3.3.2 Supplier
1.03.3.3.3 Manufacturer
1.03.3.3.4 Contractor's stamp, signed by Contractor's authorized representative certifying approval of submissions, verification of field measurements and compliance with Contract Documents
1.03.3.3.5 Details of appropriate portions of Work as applicable:

1.03.3.3.5.1 Fabrication
1.03.3.3.5.2 Layout, showing dimensions, including identified field dimensions, and clearances
1.03.3.3.5.3 Setting or erection details
1.03.3.3.5.4 Capacities
1.03.3.3.5.5 Performance characteristics
1.03.3.3.5.6 Standards
1.03.3.3.5.7 Operating weight
1.03.3.3.5.8 Wiring diagrams
1.03.3.3.5.9 Single line and schematic diagrams
1.03.3.3.5.10 Relationship to adjacent work

1.03.4 Submit three digital copies of Shop Drawings in AutoCAD™ format on 11" X 17" size drawings. Hard copy shall not be accepted. The minimum font size on the Drawings shall be ten (10) point. Failure to meet this minimum requirement will result in the Shop Drawings package being returned for re-submission.
1.03.5 After Owner's review, distribute copies.
1.03.6 Delete information not applicable to project.
1.03.7 Supplement standard information to provide details applicable to project.
1.03.8 Shop Drawings shall be required by the Owner for all systems, equipment, devices, products and connections to the control system required to fulfill the terms and conditions of the Contract Documents. The Owner shall ensure that the quality and level of completeness and detail on the Shop Drawings are satisfactory to him. The Shop Drawings shall contain the following information as a minimum:

1.03.8.1 Network Architecture Block Diagrams Showing Device Layout

1.03.8.1.1 A block diagram of the complete system architecture, physical layout and location of equipment in the building and BAS device Input/Output (I/O) point termination schematics. Provide system point capacity and expansion limits including the device type, location and size of memory, and location of all spare points. Organise submission on a device-by-device basis.
1.03.8.1.2 Show the layout of the devices on the floor plans for each building.
1.03.8.1.3 Provide a Shop Drawing of the network layout with the device locations labelled.
1.03.8.1.4 Detail the wireless text message communications connection requirements.
1.03.8.1.5 Schematic drawings of each system listed in the 25 20 nn.nn Specification Sections and the Control Sequences, showing all connected device locations, model numbers, scales and operating ranges, settings, setpoints, reset schedules, fail safe positions, input/output point numbers and related names, and all wiring and air piping layouts. Organise submission on a system-by-system basis.
1.03.8.1.6 Schematic drawings of points, field devices and junction/pull boxes located outside the BAS system devices. Show these points, devices and boxes on building floor plans.

1.03.8.1.7 Proposed line voltage power connections including breaker panel number, breaker number and type, and amperage.

1.03.8.2 Input/Output Object List

1.03.8.2.1 Provide a hardware and software points/variables list to comply with the all requirements of devices listed in the 25 20 nn.nn sections, complete with a description of the purpose of the point, sorted in alphabetical order.

1.03.8.2.2 Provide a complete database for all system points detailed in the 25 20 nn.nn sections, including point names, point descriptors, alarm messages, menu penetration, Operator access, colour graphics, custom system reports as defined elsewhere in this Specification and operating schedule one (1) per system or independent control zone).

1.03.8.3 Project Work Plan

1.03.8.3.1 The Project Work Plan shall include information on the following:

1.03.8.3.1.1 Scope and objectives of the project
1.03.8.3.1.2 Deliverables the project will produce
1.03.8.3.1.3 Process which shall be employed to produce those deliverables
1.03.8.3.1.4 Time frame and milestones for the production of the deliverable (see below)
1.03.8.3.1.5 Organization and staffing which will be established
1.03.8.3.1.6 Responsibilities of those involved
1.03.8.3.1.7 Work steps to be undertaken

1.03.8.3.2 Provide additional details of where Work requires temporary interruption of mechanical and other services described in the Contract Documents.

1.03.8.3.3 Complete the following projected Work schedule showing completion dates (weeks after Contract Award Date):

Contract Award date..... Week- 0
Complete Controls Specification Submittals by..... Week- _____
Submit Security Clearance Forms for staff assigned to Work by..... Week- _____
Submit Hardware (Input/Output Object List, floor plan layout, device layout)
Shop Drawings for review by..... Week- _____
Submit Software (programming) Shop Drawings for review by..... Week- _____
Submit Software (alarm and event object list and definitions) Shop Drawings
for review by ..... Week- _____
Submit Software (trendlog) Shop Drawings for review by ..... Week- _____
Submit Software (complete database listing) Shop Drawings for review by ..... Week- _____
Submit list of required network drops c/w IP addresses to devices, building level
WS (if any),building printers (if any) Shop Drawings by ..... Week- _____
Submit list of required network drops to Server Farm (if any),
Server Farm printers (if any) Shop Drawings by..... Week- _____
Submit Front End design and graphics Shop Drawings by ..... Week- _____
Submit Firewall Password Request Shop Drawing by ..... Week- _____

Installation Work Phase:
Complete rough-in and field wiring by ..... Week- _____
Install and make device terminations by ..... Week- _____
Work ready for Owner's Rough-In Review by ..... Week- _____
Provide Front End/Web Server by ..... Week- _____
Implement BACnet communications on Intranet and any interoperability functions by ..... Week- _____

Commissioning Work Phase:
Mechanical has systems ready for Mechanical Static Commissioning by ..... Week- _____
Complete Controls Hardware Commissioning by..... Week- _____
Submit Hardware Commissioning Forms for review by Owner by ..... Week- _____
System ready for Hardware Commissioning review by ..... Week- _____
Complete all Front End/Software Work by..... Week- _____
Submit draft As-Built Controls Drawings for review by Owner by..... Week- _____
Provide As-Built Control Drawings by ..... Week- _____
Submit draft Operating and Maintenance Manuals for review by Owner by..... Week- _____
Provide Operating and Maintenance Manuals by..... Week- _____
System ready for Front End/Software Commissioning review by ..... Week- _____
System ready for Functional Performance Testing by ..... Week- _____

Closeout Work Phase:
Request Controls Substantial Completion (Interim Certificate) by..... Week- _____
Complete initial equipment training by..... Week- _____
Complete final Front End System training by..... Week- _____
Request Final Completion Certificate (First Year Warranty Start) by ..... Week- _____

In-warranty Work Phase:
Start after sales service by..... Week- _____
Complete after sales service by ..... Week- _____
Complete Month eleven (11) warranty inspection by ..... Week- _____
Close out Warranty by..... Week- _____

1.03.8.4 BAS System Hardware Supplied

1.03.8.4.1 Shop Drawings shall include, but not be limited to Manufacturer's performance data including dimensional drawings, customer connection drawings, power circuit diagrams, installation and maintenance manuals, warranty description, ratings, certification agency file numbers and catalogue information. Provide Shop Drawings for all control system hardware, including:

1.03.8.4.1.1 Level 1 through 3 BAS control device hardware and I/O extender devices
1.03.8.4.1.2 Field equipment
1.03.8.4.1.3 Instrumentation and termination devices
1.03.8.4.1.4 Actuators and Operators
1.03.8.4.1.5 Sensors and Transmitters

1.03.8.4.1.6 Outdoor air temperature sensor sun shield
1.03.8.4.1.7 Space temperature sensor guards
1.03.8.4.1.8 Control valves
1.03.8.4.1.9 Control dampers
1.03.8.4.1.10 VSDs
1.03.8.4.1.11 Power metering devices.

1.03.8.5 Level 0 Hardware and Software Supplied

1.03.8.5.1 Shop Drawings shall include:

1.03.8.5.1.1 Server hardware and software details and configuration complete with all attached peripheral devices, batteries, power supplies, etc. with interconnection diagrams
1.03.8.5.1.2 Workstation hardware and software details and configuration complete with all attached peripheral devices, batteries, power supplies, etc. with interconnection diagrams
1.03.8.5.1.3 POT hardware and software details and configuration complete with all attached peripheral devices, batteries, power supplies, etc. with interconnection diagrams
1.03.8.5.1.4 Description of the alarm and graphics/report printers
1.03.8.5.1.5 Description of all Network Devices and communication interfaces, gateways, repeaters, and connected systems and equipment. Provide details on the network layout, IP addressing, network protocols used, special configuration, etc.
1.03.8.5.1.6 Wireless text message hardware and software details and configuration complete with all attached peripheral devices, batteries, power supplies, etc. with interconnection diagrams

1.03.8.6 Device-By-Device Factory Memory Calculation

1.03.8.6.1 Provide a factory-authorized memory usage calculation with this submission to justify that this requirement is met on a device-by-device basis.

1.03.8.7 Proposed Programming

1.03.8.7.1 The Submission shall detail the programming for all controlled and monitored equipment, and all documentation required to maintain and operate the control system. The Owner reserves the right to review the programming and require the Contractor to change software for systems where field conditions necessitate modification of the Control Sequences.
1.03.8.7.2 Software submissions shall be based on the Control Sequences outlined in the Contract Documents.
1.03.8.7.3 Provide a description of software programs and any additional equipment required to provide a complete and operational system.
1.03.8.7.4 Provide descriptive data and Control Sequences of all operating, user, and application software including a complete Operating and Maintenance Manual, Programmer's Manual and all instruction tailored for this project.
1.03.8.7.5 The Contractor shall list which programming features are not supported in Level 3 devices.
1.03.8.7.6 Alarm logic, limits, delays, classification and message format transmitted by the BAS devices and Front End.
1.03.8.7.7 The Contractor may apply to the Owner for an exemption to providing written Control Sequences as one of the documentation deliverables if the software comments, in the opinion of the Owner, are clear enough so as not to warrant the provision of written Control Sequences.

1.03.8.8 Proposed Front End Graphics

1.03.8.8.1 The Owner reserves the right to review the graphics and require the Contractor to change the graphics for systems where field conditions necessitate modification of the Control Sequences, graphical hierarchy or organizational structure.
1.03.8.8.2 Start-up graphic.
1.03.8.8.3 Object Tree/building isometric showing all links to other graphics.
1.03.8.8.4 Graphics and sub-graphics for each equipment grouping as typical what the Contractor has provided on other Lake County Work.
1.03.8.8.5 Graphics and sub-graphics for each floor plan.
1.03.8.8.6 Front End submissions shall be based on the Control Sequences outlined in the Specifications.
1.03.8.8.7 Provide a Graphics List as a guide based on the 25 20 nn.nn Specification Sections. It is sufficient to use words like *Boiler #1 layout* or *Chiller #1 circuit*. Contractor shall add graphics as required to meet the Control Sequences.
1.03.8.8.8 Provide details on the hierarchical structure and linkage between the graphics.

1.03.8.9 BACnet Object List

1.03.8.9.1 A BACnet Object list based on the Points List and Control Sequences. In addition to standard I/O information, the Object list shall contain the following items to ensure BACnet interoperability:

1.03.8.9.1.1 Proposed I/O Names - An I/O point naming convention shall be specified by the Owner in order to clearly identify system points. No BACnet Objects shall be labelled until the proposed I/O Names are approved by the Owner.

1.03.8.9.1.2 BACnet Object Description - This description includes the Object ID and Device ID for each I/O point. The Contractor shall ensure that no device ID's are duplicated. Document all non-standard BACnet objects and properties including their structure and data types.

1.03.8.9.1.3 List exceptions to support for optional properties of all standard BACnet objects required to meet the Control Sequences.

1.03.8.9.1.4 List exceptions to support for writable properties required to meet the Control Sequences. If the property is writable, then all data types shall be supported.

1.03.8.9.1.5 Proprietary macro objects which represent equipment such as chillers, boilers, AHUs etc.

1.03.8.9.2 Objects and their respective property values shall be approved via the Shop Drawing process.

1.03.8.10 Spare Parts List

1.03.8.10.1 Not required.

1.03.8.11 Inter-Connection to Equipment provided with integrated controls.

1.03.8.11.1 Provide information on what hard-wired interlock and interconnects are made between the equipment control system and the BAS system.

1.03.8.11.2 Indicate what additional gateways, protocol convertors or BACnet interfaces are being used to control mechanical equipment.

1.03.8.12 Motorized Dampers Submittal

1.03.8.12.1 Not required.

1.03.8.13 Motorized Valves Submittal

1.03.8.13.1 Not required.

1.03.8.14 List of Manufacturers

1.03.8.14.1 Contractor shall submit one copy of a complete List of Manufacturers, with names of Manufacturers of products which shall be used to execute the Work described in the Contract Documents, within two (2) working days of notification of Contract award from Owner. If the List of Manufacturers is not submitted within the two (2) working day timeframe, Contractor shall use the product name outlined in each individual clause of the Specification.

1.03.8.14.2 Submit Shop Drawings for all items included in the Work that will be provided by the List of Manufacturers.

1.03.8.15 Other items listed throughout the Contract Documents

1.03.8.15.1 Identification labelling method, naming conventions used and representative samples of the tags, labels and labelling stencils used. See Section 25 05 53 for requirements.

1.03.9 The required number of Shop Drawings shall be submitted with the Authority Having Jurisdiction approvals where required. Prepare and furnish additional drawings, details or information in the Shop Drawing submission, where the requirements of the Authority having Jurisdiction varies from the requirements set out in this Project Manual.

1.04 BAS System Shop Drawing Review

1.04.1 See Division 01 for Shop Drawing requirements for the Work. The requirements in this clause apply to this Division only.

1.04.2 The Owner is responsible for reviewing and approving submittals, and for maintaining a file of approved submittals.

1.04.3 The review of Shop Drawings by the Owner is for the sole purpose of ascertaining conformance with the general concept. This review shall not mean that the Owner approves the detail design inherent in the Shop Drawings, responsibility for which shall remain with the Contractor submitting same, and such review shall not relieve the Contractor of responsibility for errors or omissions in the Shop Drawings or of responsibility

for meeting all requirements of the construction and Contract Documents. Without restricting the generality of the foregoing, the Contractor is responsible for dimensions to be confirmed and correlated at the Place of Work, for information that pertains solely to fabrication processes or to techniques of construction and installation and for co-ordination of the work of all Subcontractors.

1.04.4 Allow ten (10) working days for Owner's review of each Submission.

1.04.5 Adjustments made on Shop Drawings by Owner are not intended to change Contract Price. If adjustments affect value of Work, state such in writing to Owner prior to proceeding with Work.

1.04.6 Make changes in Shop Drawings as Owner may require, consistent with Contract Documents. When resubmitting, notify Owner in writing of revisions other than those requested.

1.04.7 If upon review by Owner, no errors or omissions are discovered or if only minor corrections are made, copies shall be returned and fabrication and installation of Work may proceed. If Shop Drawings are rejected, noted copy shall be returned and resubmission of corrected Shop Drawings, through same procedure indicated above, must be performed before fabrication and installation of Work may proceed.

1.04.8 No work shall be undertaken nor shall equipment delivery be accepted until final or partial approval of Shop Drawings has been granted by the Owner.

1.04.9 Fabrication of equipment shall not commence until Shop Drawings of such equipment have been reviewed by the Owner.

1.04.10 BAS programming or Front End software development and installation shall not commence until Shop Drawings have been reviewed by the Owner.

1.04.11 In addition to project identification, date, etc., the form of stamp used by the Owner in Shop Drawings review shall be as follows:

> Date_____
>
> This review is to ascertain certain conformance to design concept only and does not imply approval of detail design inherent in the Shop Drawings. Contractor remains responsible for all dimensions and site conditions, meeting all contract document requirements and for any errors and/or omissions in the Shop Drawings.
>
> ☐ Contractor Review Done ☐ Y ☐ N
> ☐ Reviewed/No Letter Attached
> ☐ Reviewed as Modified on Shop Drawing Document
> ☐ Revise and Re-submit as per Attached Letter/Memo
> ☐ Not Reviewed
> ☐ Reviewed as per Attached Letter/Memo

1.04.12 This stamp or sticker shall be applied by the Owner to the Shop Drawings.

2 - PRODUCTS

Not Used

3 - EXECUTION

Not Used

End of Section

25 00 42 INTEGRATED AUTOMATION - GENERAL REQUIREMENTS - REFERENCES

1 - GENERAL

1.01 General

1.01.1 Terminology used in this Specification is intended to be generic in nature and consistent with meanings that have been defined through general use and/or accepted trade practices.

1.01.2 BACnet as used in this Specification shall refer implicitly to ANSI/ASHRAE 135-2010 and approved Addenda unless otherwise noted.

1.01.3 The abbreviations, acronyms, definitions and reference standards shall apply to all parts of the Division 25 Specification.

1.02 Abbreviations and Acronyms

1.02.1 AI - Analog Input
1.02.2 AHU - Air Handling Unit
1.02.3 ANSI - American National Standards Institute
1.02.4 AO - Analog Output
1.02.5 ASCII - American Standard Code for Information Interchange
1.02.6 ASHRAE - American Society of Heating, Refrigerating, and Air Conditioning Engineers
1.02.7 ASME - American Society of Mechanical Engineers
1.02.8 ASTM - American Society for Testing Materials
1.02.9 BACnet - Building Automation and Control network
1.02.10 BBMD - BACnet Broadcast Management Device
1.02.11 BDT - Broadcast Distribution Table
1.02.12 BI - Binary Input
1.02.13 BIBB - BACnet Interoperability Building Block
1.02.14 BIL - basic impulse insulation level
1.02.15 BTL - BACnet Testing Laboratories™
1.02.16 BO - Binary Output
1.02.17 CSA - Canadian Standards Association
1.02.18 CD - Compact Disc
1.02.19 CISPR - International Special Committee on Radio Interference
1.02.20 BAS - Direct Digital Control
1.02.21 DOT - Department Of Transportation
1.02.22 DVD - Digital Versatile Disc or Digital Video Disc
1.02.23 FCC - Federal Communications Commission
1.02.24 HVAC - Heating, Ventilation and Air Conditioning
1.02.25 I/O - Input/Output
1.02.26 ID - Identifier
1.02.27 IEC - International Electrotechnical Commission
1.02.28 IEEE - Institute of Electrical and Electronic Engineers
1.02.29 IP - Internet Protocol
1.02.30 ISA - Instrument Society of America
1.02.31 LAN - Local Area Network
1.02.32 MS/TP - Master-Slave/Token Passing.
1.02.33 MAC - Media Access Control
1.02.34 MUA - Make-Up Air handler
1.02.35 NBC - National Building Code
1.02.36 NEC - National Electrical Code
1.02.37 NEIS - National Electrical Installation Standards
1.02.38 NEMA - National Electrical Manufacturers Association
1.02.39 NIST - National Institute of Standards and Technology
1.02.40 NFPA - National Fire Protection Association
1.02.41 NSTA - National Safe Transit Association
1.02.42 OSI - Open Systems Interconnection
1.02.43 PICS - Protocol Implementation Conformance Statement
1.02.44 POT - Portable Operator’s Terminal

1.02.45 PTP - Point-To-Point (or Peer-To-Peer)
1.02.46 RAS - Remote Access Service
1.02.47 RTU - Roof Top Unit
1.02.48 SAE - Society of Automotive Engineers
1.02.49 TAB - Testing And Balancing
1.02.50 TAP - Telelocator Alphanumeric Input Protocol.
1.02.51 TCP - Transmission Control Protocol
1.02.52 UBD - Uniform Building Code
1.02.53 UDP - User Datagram Protocol
1.02.54 UL - Underwriters Laboratories
1.02.55 cUL - Underwriters Laboratories Canada
1.02.56 ULC - Underwriters Laboratories Canada (This symbol is used for firestopping only).
1.02.57 UMC - Uniform Mechanical Code
1.02.58 VPN - Virtual Private Network
1.02.59 WAN - Wide Area Network
1.02.60 WS –Workstation
1.02.61 BAS - Building Automation System
1.02.62 BAS Device Network - a network of BAS controllers provided in the Work.

1.03 General Definitions

1.03.1 Accessible concealed areas - include crawl spaces not covered by the "accessible open" definition and T-bar ceiling spaces.
1.03.2 Accessible open areas - include boiler rooms, mechanical rooms, crawl spaces used for storage and full height, walkable crawl spaces, hallways, offices, areas used by the public or occupants, workshops, etc. Such spaces are also referred to as exposed spaces.
1.03.3 BETA equipment - any component that has not been released by the Manufacturer for general distribution prior to the Owner issuing the Bid.
1.03.4 Owner - shall be considered the Owner in the Specification.
1.03.5 Engineer - shall refer to mechanical design engineer, commissioning agent, and/or representative chosen by the Owner.
1.03.6 Ethernet - A carrier sensing, multiple access with collision detection, network technology defined by ISO/IEC 8802-3.
1.03.7 Inaccessible concealed areas - include walls, shafts, or ceiling pipe chases, block walls, drywall ceilings and other areas that do not permit human entry.
1.03.8 Internet Protocol (IP) - a protocol that handles the breaking up of data messages into packets (also called datagrams), the routing of the packets from their origin to the destination network and node, and the reassembling of the packets into the data message at the destination. IP operates at the Internetwork layer of the TCP/IP model, which is equivalent to the network layer of the ISO/OSI reference model.
1.03.9 Operator, Owner - These terms refer to the person or persons who will own and operate the BAS system.
1.03.10 Product Data - are illustrations, standard schedules, performance charts, instructions, brochures, diagrams and other information furnished by the Contractor to illustrate materials or equipment for some portion of the Work.
1.03.11 Provide - Supply, install, connect, document and commission the system to operate to the satisfaction of the Owner.
1.03.12 Shall or Must - This word, or the term "required", means that complete compliance with the Mandatory Specification clause(s) and/or those clauses relating to items where points were claimed in the Scored items are mandatory.
1.03.13 Shall not or Must not - This phrase means that the specified prohibition(s) will not be accepted in the Work under any circumstances.
1.03.14 Samples - are physical examples which illustrate materials, equipment or workmanship and establish standards by which the Work will be judged.
1.03.15 Shop Drawings - are drawings, diagrams, illustrations schedules, performance charts, control point schematics, BAS equipment and programming and other data specially prepared for the Work by the Contractor or a Subcontractor, Manufacturer, Supplier or Distributor to illustrate some portion of the Work.
1.03.16 Should - This word means that complete compliance with a Specification clause is optional. Valid reasons may exist in particular circumstances in which the Contractor wishes to deviate from fully complying with the specification clause(s), however the full implications must be understood and carefully weighed before choosing to deviate from the Specification.

1.03.17 Substantial Completion -This the date that the Owner considers the Work to be complete sufficient to allow the warranty to start. The Owner will provide a list of deficiencies to the Contractor.

1.03.18 Testing And Balancing (TAB) - means to test, adjust and balance all systems, equipment and devices to perform in accordance with Contract Documents.

1.03.19 Total Completion - This is the data that the Owner considers the Work to be totally complete including all deficiencies.

1.03.20 Transmission Control Protocol (TCP) - a protocol that enables two (2) hosts to establish a connection and exchange streams of data. TCP handles delivery and order of data streams.

1.03.21 Year 2036 compliant - correctly present the date and time, the day of the week, leap years, date calculations, to the year 2036. The date and time to the year 2036 shall be correct after a power failure. This date and time shall be presented without Operator intervention. All hardware and software provided in the Work shall be Year 2036 compliant.

1.03.22 Intranet - A privately maintained computer network that can only be accessed by persons authorized by the organization that operates it.

1.04 BAS Definitions

1.04.1 Client - An application or device acting as a requestor or consumer of data in networked systems. A client requests a server device for data resident in the server.

1.04.2 Colour graphics - These are pictorial representations of all mechanical systems, BAS system devices and the building floor plans stored on the server, POT or a BAS device hard drive.

1.04.3 Downloading - This means transferring programming and/or configuration data from a Level 0 device to a lower level control device. BACnet refers to this operation as writing to a BACnet device using AtomicFileWrite.

1.04.4 Extended logging - This is the process of collecting and archiving trend data in excess of two hundred (200) samples on an input, output or software variable, setpoint, etc. to the Front End archive. The extended logs shall be stored in the Front End software native format or automatically saved in an EXCEL™ (or approved equal) spreadsheet for retrieval by the Operator. Extended logging could also be done by a hard drive connected directly to the BAS device.

1.04.5 Front End - This is the graphical interface software to the BAS system device network.

1.04.6 Internetwork - a set of two (2) or more networks inter-connected by routers. In a BACnet Internetwork, there shall be no more than one (1) message path between any two (2) nodes.

1.04.7 Local connection - This shall mean connecting a computer or Service Tool via a cable, directly into a communications port on the device to which communications is being attempted.

1.04.8 MS/TP - A type of LAN implementation defined in BACnet that usually uses the EIA-485 signalling standard. To initiate communications on the network, a node will have an electronic “token”, which is passed from one node to another around the network. Master devices are allowed to have the token, whereas slave devices are allowed only to respond to requests from master devices.

1.04.9 Operator Workstation (OWS) - a desktop computer used to provide direct or remote communications to the BAS system.

1.04.10 Peer-to-Peer - A network in which messages are passed between nodes that are considered equal peers on the network.

1.04.11 Portable Operators Terminal (POT) - a laptop computer used to provide direct and remote communications to the BAS system.

1.04.12 Server - In networked systems, a computer, application or device acting as a server of data and/or services

1.04.13 Service Tool - a proprietary tool used to provide direct communications to the BAS system device network in order to configure, diagnose, read values, etc during installation and periodically when devices require reconfiguration. The Service Tool is sometimes used in combination with the POT to provide direct communications to the BAS system device network.

1.04.14 Set, command, override or modify - These terms are used interchangeably and refer to the process of taking a hardware or software point out of programmed control and placing it into manual control or a fixed state or value by the Operator.

1.04.15 Software point/variable - These terms are used interchangeably and refer to the software setpoints, limits, virtual points, subroutine arguments, etc. that are used to pass data from device to device or in and out of subroutines. Software points/variables are considered objects in this Specification.

1.04.16 Terminal mode - This means accessing the BAS system device network via local or remote connection using a computer in VT100 emulation or Windows HyperTerminal (ASCII text) mode.

1.04.17 Transmit/Transmission - This means sending data to servers, WS, POT, BAS device, printer, wireless text message device, etc. via a data communications link (e.g., serial connection, telephone, Ethernet network).

1.04.18 Trending - This is the process of collecting historical data at the device level on an input, output or software variable or setpoint. The terms “history” and “trend log” are used interchangeably in this Specification. There are two (2) types of trends. Logged trends are the accumulation of historical data. Dynamic trends are the real time graphical display of data.

1.04.19 Uploading - This means transferring programming and/or configuration data from the BAS devices to a Level 0 device. BACnet refers to this operation as reading from a BACnet device using AtomicFileRead.

1.04.20 All other definitions shall be based on the following references: Direct Digital Controls for HVAC Systems by T. Hartman (McGraw-Hill, 1993); Direct Digital Control of Building Systems: Theory and Practice by M. Newman (Wiley, 1994) and BAS for HVAC Monitoring and Control course by ASHRAE (ASHRAE, 1995). The Owner shall be the final arbiter of all definitions or terms.

1.05 BACnet Definitions

1.05.1 BACnet/IP - One (1) of the LAN types defined by BACnet, whose use is specifically suited to IP centric infrastructure. The protocol is fully described in Annex J of the BACnet Specification.

1.05.2 BACnet/NS - defines a security architecture for BACnet. BACnet Network Security is a mechanism in Standard 135 for encrypting and authenticating network communications using the Advanced Encryption Standard (AES). The intent of this architecture is to provide peer entity, data origin, and operator authentication, as well as data confidentiality and integrity. Other aspects of communications security, such as authorization policies, access control lists, and non-repudiation, are not defined by this standard. Systems that require these functions may add them to BACnet using the proprietary extensibility features provided for by this architecture, or by some other proprietary means.

1.05.3 BACnet/WS – BACnet Web services are a standard way of integrating applications over an IP network. This service is intended to be communication "protocol neutral" in that the defined Web services can be used with any underlying protocol including BACnet, Konnex, MODBUS, LON or legacy proprietary protocols. This protocol defines how to read and write the common elements of all building automation and control systems such as values, schedules, trend logs and alarm information using services such as 'getValue' and 'setValue' that use a simple "path" to define the intended data source

1.05.4 BACnet gateway - Devices that use BACnet objects, services and communication protocols to represent data in BACnet format. They translate this data into one or more non-BACnet protocols.

1.05.5 BACnet Identifier - BACnet defines three (3) important IDs used to identify BACnet 1) devices, 2) objects, and 3) properties. A Vendor ID defines who manufactured a device. An Object ID identifies an object’s type and instance number. A Property ID identifies a property by a code.

1.05.6 BACnet Interoperability Building Blocks (BIBBs) - These are BACnet objects and services grouped together by ANSI/ASHRAE 135-2010 to define interoperable features. These are prescribed in terms of an “A” and a “B” device. Both of these devices are nodes on a BACnet Internetwork. In most cases the “A” device will act as the user of data (client) and the “B” device will be the provider of this data (server). In addition, certain BIBBs may also be predicated on the support of certain, otherwise optional BACnet objects or properties and may place constraints on the allowable values of specific properties or service parameters.

1.05.7 BACnet PICS - A Protocol Implementation Conformance Statement document that details the particular BACnet objects, services and capabilities supported by a type of BACnet device. Every BACnet-compliant device has an associated PICS published by the Manufacturer.

1.05.8 BACnet Testing Laboratories™ (BTL) - A lab operated by BACnet International to test building automation products and certify them as BACnet compliant. Listings of tested products are available at www.bacnetinternational.org.

1.05.9 BBMD - BACnet Broadcast Management Devices are used to distribute Broadcast-messages across multiple IP subnets. Only one BBMD shall be active per IP Broadcast Domain, otherwise a “telegram flood” may occur due to broadcast messages repeating themselves. All BBMDs of a BACnet/IP network must have the same BDT (Broadcast Distribution Table) configuration. BBMDs are fully described in Annex J of the BACnet Specification.

1.05.10 Bridge - A device that connects two LANs or segments of the same LAN at the MAC or Datalink layers. The LANs can be alike or different. A bridge can connect an Ethernet and token-ring network, for example. Unlike routers that operate at the OSI Network and higher layers, bridges forward messages without analyzing or rerouting them.

1.05.11 Datalink - a layer defined in the OSI (Open Systems Interconnection) model to add basic packet organization to groupings of octets transmitted using physical layer signalling.

1.05.12 Device Profile - A collection of BIBBs that describes the minimum BACnet capabilities of a particular device in order to achieve reliable exchange of information

1.05.13 Half-Router - a device that can participate as one partner in a point-to-point (PTP) connection. Two (2) half-routers form an active PTP connection and act as a single router.

1.05.14 Instance - a number that uniquely identifies an object within a device or a device on a BACnet Internetwork.

1.05.15 Interoperability - the ability of devices to provide objects and services to support BIBBs and other BACnet features in a network visible manner.

1.05.16 Local matter - A feature provided in a proprietary matter which does not need to meet the test of interoperability or network visibility.

1.05.17 Media Access Control (MAC) - The combination of physical and datalink layers that together control access to a given medium. In BACnet, each device has a unique MAC Address/Network Number combination that identifies it on the BACnet Internetwork. In BACnet ANSI/ASHRAE Standard135-2010, the MAC LAN types are: BACnet ARCnet, BACnet Ethernet 8802-3, BACnet/IP, BACnet MS/TP (master-slave/token passing), BACnet over LonTalk Foreign Frames, and BACnet PTP (point-to-point).

1.05.18 Native BACnet BAS devices - These are Level 1/1A, 2/2A and 3/3A BAS devices that have an embedded BACnet protocol stack. These devices use BACnet objects, services and communication protocols (e.g., MS/TP) directly without use of translation devices or drivers. Only the programming language of the device may be done as a local matter.

1.05.19 Native BACnet WS - These are Level 0 computers that use a BACnet protocol stack that is either embedded in the device (in the case of a web appliance or a display device) or in the Front End software. These devices use BACnet objects, services and communication protocols without the use of translation devices or drivers. Graphics, programming and configuration services and tools may be done as a local matter.

1.05.20 Network visible - BACnet objects whose properties can be read using BACnet ReadProperty and ReadPropertyMultiple services from another Manufacturer's BACnet client.

1.05.21 Object - a collection of information in a BACnet system described by a group of properties (see ANSI/ASHRAE 135-2010 for full definition). An Object might represent information about a physical input or output, or it may represent a logical grouping of points that perform some function, such as a setpoint. Every Object has an identifier that allows the BACnet system to identify it. An Object is similar to a data point, although it contains additional information other than present value. It is only through its properties that an Object is monitored and controlled. The terms input, output, variable, and points are considered Objects in this Specification. References to the Points List are to the Points Lists found in the 25 09 nn Stick Built sections where "nn' refers to all section numbers listed in the Contract Documents. The term Object shall also mean Object Type.

1.05.22 Property (of an Object) - the means by which objects are monitored and controlled. BACnet defines over three hundred (300) properties of Objects. Three (3) properties (Object-identifier, Object-name, and Object-type) must be present in every object. BACnet also requires that certain Objects support specific additional properties. The type of Object and the type of device in which that Object resides determine which properties are present. Some properties are writable, and others can only be read. The attribute of a point is considered to mean a property of an Object. See ANSI/ASHRAE 135-2010 for a complete description of objects and their properties.

1.05.23 Router - A device that connects two (2) or more LANs. Routers are similar to bridges, but provide additional functions, such as message filtering and forwarding based on various criteria.

1.05.24 Services - the method by which one (1) BACnet device gets information from another BACnet device, commands a BACnet device to perform certain actions (through its objects and properties, of course), or lets other BACnet devices know that something has happened. The only mandatory service required by all BACnet devices is the Readproperty service. There are a total of thirty nine (39) standard services.

1.05.25 UDP - One of the IP family of protocols. UDP is used to convey BACnet/IP messages and is characterized by a "port number" for each protocol. The UDP-Port can take a value between 47808 (BAC0 hex) and 47817 (BAC9 hex).

1.05.26 Other definitions as outlined in the ANSI/ASHRAE 135-2010 standard and subsequent Addenda up to Bid Close shall form part of the Specification Documents.

1.06 Reference Standards

1.06.1 518 IEEE Guide for the Installation of Electrical Equipment to Minimize Noise Inputs to Controllers from External Sources

1.06.2 ANSI/ASHRAE Standard 135-2010: *BACnet - A Data Communications Protocol for Building Automation and Control Networks*, as amended from time to time. Simply referred to as "BACnet" in this document

1.06.3 ASTM D999-91

1.06.4 ISO/IEC 8802-3 (2000), Information Processing Systems - Local Area Networks - Part 3: Carrier sense multiple access with collision detection (CSMA/CD) access method and physical layer Specifications.

1.06.5 Underwriters Laboratories: Products shall be UL-916-PAZX listed

1.06.6 NFPA 70

1.06.7 Federal Communications Commission - Part J

1.06.8 UL 508 and CSA Standard C22.2 No. 142 for Isolation Voltages
1.06.9 IEC 60068-2.1, 2.2, 2.3, 2.6 and 2.27
1.06.10 IEC 61000-4.2, 4.3, 4.4, 4.5 and 4.6
1.06.11 NSTA Project 1A
1.06.12 CISPR 11 (EN 55011)
1.06.13 National Electrical Manufacturers Association (NEMA)
1.06.14 IA 2.1/IEC 1131, Part 1 Programmable Controllers - General Information
1.06.15 IA 2.2/IEC 1131, Part 2 Programmable Controllers - Equipment Requirements and Tests
1.06.16 ICS 1 Industrial Control and Systems: General Requirements
1.06.17 ICS 6 Industrial Control and Systems: Enclosures
1.06.18 ES0, Enclosures for Electrical Equipment (1000 Volts Maximum)
1.06.19 EI 21.1 Instrument Transformers for Revenue Metering (110 kV BIL and less)
1.06.20 EI 21.2 Instrument Transformers for Revenue Metering (125 kV BIL through 350 kV BIL)
1.06.21 ICS 2-230
1.06.22 ICS 3-304-42
1.06.23 Institute of Electrical and Electronic Engineers (IEEE)
1.06.24 C12.11 Instrument Transformers for Revenue Metering, 10 kV BIL through 350 kV BIL (0.6 kV NSV through 69 kV NSV)
1.06.25 IEEE Std. 472-1974/ANSI C37.90/90A-1974
1.06.26 National Fire Protection Association (NFPA) 70
1.06.27 National Electrical Code (NEC)
1.06.28 National Electrical Contractors Association
1.06.29 National Electrical Installation Standards (NEIS)
1.06.30 SAE HS-1738, Electrical Standard for Industrial Machinery

1.07 Trademarks

1.07.1 AutoCAD® - registered trademark of Autodesk, Inc. in the United States and other countries
1.07.2 BACnet® - registered trademark of American Society of Heating, Refrigerating and Air-Conditioning Engineers (ASHRAE)
1.07.3 BTL® - registered trademark of BACnet International
1.07.4 Caddy® - a registered trademark of Erico, Inc. of Solon, Ohio
1.07.5 Celcon® - registered trademark of Ticona Corporation or its affiliates
1.07.6 Core™ - trademark of Intel Corporation in the United States and other countries
1.07.7 Excel® - registered trademark of Microsoft Corporation in the United States and other countries
1.07.8 Explorer® - registered trademark of Microsoft Corporation in the United States and other countries
1.07.9 Intel® - registered trademark of trademark of Intel Corporation in the United States and other countries
1.07.10 LEED® - registered trademark of the U.S. Green Building Council
1.07.11 LONMARK® - registered trademark of the Echelon Corporation
1.07.12 LonTalk® - registered trademark of the Echelon Corporation
1.07.13 LONWORKS® - registered trademark of the Echelon Corporation
1.07.14 Microsoft® - registered trademark of Microsoft Corporation in the United States and/or other countries
1.07.15 Modbus® - registered trademark of Schneider Electric in the United States and other countries
1.07.16 Panduit® - registered trademark of Panduit Corporation in the United States and other countries
1.07.17 Teflon® - registered trademark of E.I. du Pont de Nemours and Company
1.07.18 SnapTrack™ - trademark of Tyco Electronics Corporation
1.07.19 Visio® - registered trademark of Microsoft Corporation in the United States and other countries
1.07.20 Vista® - registered trademark of Microsoft Corporation in the United States and other countries
1.07.21 Windows® - registered trademark of Microsoft Corporation in the United States and other countries
1.07.22 Word® - registered trademark of Microsoft Corporation in the United States and other countries
1.07.23 Xeon® - registered trademark of trademark of Intel Corporation in the United States and other countries

2 - PRODUCTS

Not Used

3 - EXECUTION

Not Used

End of Section

25 00 77 INTEGRATED AUTOMATION - GENERAL REQUIREMENTS - CLOSEOUT PROCEDURES

1 - GENERAL

1.01 Preliminary Closeout Reviews

1.01.1 Before completion of the work, additional submittals are made by the Contractor to the Owner. These submittals include the following:

1.01.1.1 As-built documents
1.01.1.2 Maintenance contracts
1.01.1.3 Warranties and Guarantees
1.01.1.4 Operating and maintenance Documentation

1.02 Final Closeout Reviews

1.02.1 Upon completion of the System Start-up, Field Acceptance Testing and Commissioning, the Owner shall sign off and take complete possession of the Work.

1.03 Safety Device Testing

1.03.1 Make complete inspection and testing of all safety devices to ensure that safety devices are in complete accordance with Specifications and Manufacturer's recommendations and that the safety devices are connected and operating according to all local regulations. Provide a full description of all safety and test procedures required.

1.03.2 On completion of the inspections, supply to Owner letters and/or certificates for their record, confirming that inspections have been completed. Include copies in the Operating and Maintenance Manuals.

1.04 Documentation and Systems Acceptance

1.04.1 Provide the following on completion of the Work:

1.04.1.1 Four (4) copies of "As-Built" drawings reviewed by Owner (including BAS/non-BAS drawings if either or both types of control systems are specified)
1.04.1.2 Provide a CD copy of all "As-Built" drawings
1.04.1.3 Operating and Maintenance Manuals (also include lubricating data for all equipment)

1.04.2 If included as part of the Work, provide certificates for:

1.04.2.1 Electrical permits: If taken out by Contractor or Subcontractor
1.04.2.2 BAS system commissioning: As outlined in this Specification
1.04.2.3 Other: If required by code or by Owner

1.04.3 Contractor shall submit to Owner, suitable document signed by Owner or his representative, confirming:

1.04.3.1 All tests have been witnessed by Owner.
1.04.3.2 Operators have received satisfactory instruction in operation and maintenance of all equipment, systems and safety devices.
1.04.3.3 Operation and Maintenance Manuals and "As-Built" drawings have been reviewed with and approved by Owner.

1.04.4 The Owner reserves the right to recommend that a portion of the contract funds be withheld pending submission of an acceptable record set of "As-Built" drawings.

1.05 Warranties

1.05.1 Contractor shall give a minimum one (1) year warranty for parts and labour on equipment and materials installed and shall select materials and equipment where the Manufacturer gives the same warranty arrangements. Warranty shall commence on the date of the Owner's issuance of the Certificate of Total Completion.

1.05.2 Provide warranty certificates wherever given in excess of the normal warranty period showing the name of the firm giving the warranty, dated from the issuance of the Certificate of Total Completion and acknowledged on specific equipment and systems. Include these certificates with the Operation and Maintenance Manual in the appropriate sections.

1.05.3 The Contractor shall agree to make good at no additional cost, any equipment that fails to operate due to poor workmanship, manufacturing defect or improper installation. Any repairs shall be made at the convenience of the Owner during normal working hours, unless deemed an emergency.

1.05.4 The following items supplied, installed and/or commissioned by the Contractor shall be designated as part of the Work and shall be covered by warranty conditions listed in the Specification:

1.05.4.1 BAS hardware and software
1.05.4.2 Non-BAS control devices or hardware
1.05.4.3 Electrical terminal connections or devices
1.05.4.4 Device mountings and couplings to the building equipment
1.05.4.5 All items covered by Change Order

1.05.5 BAS Software and BAS hardware upgrades (for BAS systems only):

1.05.5.1 The Contractor shall also provide all proprietary software and firmware upgrades to all devices issued during the warranty period at no charge to the Owner.

1.05.5.2 Unless the product is being discontinued during the warranty period, these BAS software and BAS hardware upgrade provisions do not include introduction of new product hardware where a full board replacement is required.

1.06 Warranty Closeout

1.06.1 During the month before the end of the warranty period defined in the Contract Documents, the Owner shall prepare a list of defects identified during the warranty period. The Owner will review the list to determine if the defects are the Contractor's responsibility under the Contract Documents.

1.06.2 Contractor shall promptly remedy defects due to faulty materials, programming or workmanship that the Owner deems to be the Contractor's responsibility under the Contract Documents before the warranty ends. Failure to remedy defects shall make Contractor financially responsible to Owner for repairs (materials and labour) by qualified personnel.

1.06.3 Emergency or other repairs of the Work by qualified personnel under direction of Owner shall not nullify warranty.

2 - PRODUCTS

Not Used

3 - EXECUTION

Not Used

End of Section

25 00 78 INTEGRATED AUTOMATION - GENERAL REQUIREMENTS - CLOSEOUT SUBMITTALS

1 - GENERAL

1.01 Completion And Correction List

1.01.1 The Owner shall provide a Completion and Correction List (also referred to as a deficiency list) as required to inform the Contractor of deficiencies that need to be corrected.

1.02 Controls System Warranty/Maintenance Agreement

1.02.1 Not required.

1.03 Requirements for Emergency Service

1.03.1 The Contractor shall provide emergency service on a twenty four (24) hours-a-day basis, including weekends and public holidays on the demand of the Owner. This service support shall include all necessary labour and materials to repair or replace any worn and/or malfunctioning equipment as covered under the terms of this Specification. For the purpose of this section, emergencies are defined as any mechanical or control failures for which no temporary solution exists, that threatens comfort, health, life, mechanical system integrity, or safe operation of equipment.

1.03.2 Emergency calls during the Warranty period shall be addressed by the Contractor within four (4) hours of notification. Note: this four (4) hour response time does not include travel to the site, but normally includes remote computer connection to the site. Service shall be available twenty four (24) hours per day, seven (7) days a week. Provide the Owner with an emergency phone number for contacting service personnel.

1.03.3 The service call costs shall only be extra to the Warranty if inspection reveals any defect not directly covered under the terms of the Specification.

1.03.4 Only materials used to repair items not covered by the Warranty shall be chargeable as an extra to the Warranty and only if such materials were approved beforehand.

1.04 Documentation Requirements

1.04.1 Provide Operations and Maintenance Manuals as described in this section.

1.04.2 All documentation shall be site specific, i.e., containing information relevant to the Work only. Work specific documentation can be supplemented with standard or factory documentation.

1.04.2.1 Arrange submittals in the same sequence as these Specifications and reference at the upper right-hand corner the particular Specification provision for which each submittal is intended.

1.04.3 Digital copies of all documentation for each site shall be supplied on CDs.

1.04.4 Each CD shall be fully indexed. Each CD shall also contain a comprehensive index for all CDs in the documentation package. Clearly identify each CD's contents on the label and the box.

1.04.5 Provide the following:

1.04.5.1 How to use and find information in documentation

1.04.5.2 System operational procedures for all modes of operation including: warm-up, cool-down, occupied, unoccupied, emergency, seasonal change-over, etc.

1.04.5.3 Acceptable tolerances for system adjustment in all operating modes

1.04.5.4 Procedures for dealing with abnormal conditions and emergency situations for which there is a specified system response

1.04.6 One complete set of documentation for the Work shall be furnished to the Owner at least three (3) weeks prior to training sessions, and system and equipment tests, and the remaining sets of documentation shall be furnished prior to the commencement of the third training session. Piecemeal submittal of data is not acceptable and shall not be reviewed by the Owner.

1.04.7 The final documentation packages shall include:

1.04.7.1 Digital copies of the Control Sequences if the programming is not documented to the Owner's satisfaction

1.04.7.2 Flow charts

1.04.7.3 Manufacturer's data

1.04.7.4 Factory Operating and Maintenance manuals c/w any customization required

1.04.7.5 Soft copies of programming and each controller's database (hard copy output of programming is not necessary)

1.04.8 Provide clear, concise descriptions of all control sequences in the Working Language. OCL source code must be fully commented to aid in program debugging if the written sequence is not provided. Copies of Control Sequences shall be in Word™ format.

1.04.9 Provide computer generated flow charts of each unique control program if requested to do so by the Owner. At minimum, flow charts will be required for the optimum start routine.

1.04.10 Provide Manufacturer's technical data sheets of all hardware and software.

1.04.11 Provide all programming and Front End software and any customized documentation for the Work on CD. Provide four (4) CD copies. The CD shall have an index of all materials on the CD-ROM.

1.04.12 The Certificate of Total Completion shall not be given until all documentation required is satisfactorily provided.

1.05 Operating and Maintenance Manual

1.05.1 Provide information on warranties, certificates, etc. outlined in this Contract in the Operating and Maintenance Manual.

1.05.2 Provide operation and maintenance data for incorporation into Operating and Maintenance Manual specified elsewhere in Specification.

1.05.3 Final copies of the Operation and Maintenance Manual shall be provided to and approved by the Owner before training is given.

1.05.4 Organise Operation and Maintenance Manual as follows:

1.05.4.1 Cover sheet showing project name, Contractor name, Owner

1.05.4.2 Table of Contents

1.05.4.3 List of Subcontractors and Manufacturer's representatives including name, address and email address and emergency phone number

1.05.4.4 Organise Operation and Maintenance Manual by Specification Section.

1.05.4.5 Place all tests, certificates, permits, training signoffs in the corresponding tab of the consolidated O&M Manual for the Work

1.05.4.6 Complete set of checked Shop Drawings. Include Owner's Shop Drawing letters and any alterations to the Shop Drawings called up by these letters

1.05.5 Operational data:

1.05.5.1 Description of each system and its controls

1.05.5.2 Description of operation of each system at various loads together with reset schedules and seasonal variances

1.05.5.3 Operation instructions for each system and component

1.05.5.4 Description of actions to be taken in event of equipment failure

1.05.5.5 Valves Schedule and flow diagram shall be marked on "As-Built" drawings

1.05.5.6 Colour coding chart

1.05.6 Maintenance data:

1.05.6.1 Servicing, maintenance, operation and trouble-shooting instructions for each item of equipment

1.05.6.2 Data to include schedules of tasks, frequency, tools required and task time

1.05.7 Performance data:

1.05.7.1 Equipment Manufacturer's performance data sheets with point of operation as left after installation and commissioning is complete

1.05.7.2 Equipment performance verification test results

1.05.7.3 Special performance data as specified elsewhere

1.05.8 Submittal of Operation and Maintenance Manuals for approval:

1.05.8.1 Submit a complete digital copy of draft Operation and Maintenance Manual to Owner for approval. Submission of individual data shall not be accepted unless so directed by Owner.

1.05.8.2 Make changes as required and re-submit digital copies as directed by Owner.

1.05.9 Additional data:

1.05.9.1 Prepare and insert into Operation and Maintenance Manual when need for same becomes apparent during demonstrations and instructions specified above.

1.05.9.2 Include MSDSs for each product supplied on the project (e.g., boiler chemicals).

1.06 Operations Manual Requirements

1.06.1 Provide final version of the Operating and Maintenance Manuals (described in 25 00 78) on CDs, each containing all Subcontractor's and suppliers' names and telephone numbers, data sheets, valve charts, equipment charts if changes to equipment are made, brochures, operating, maintenance and lubricating instructions as well as number coded wiring diagrams and a complete set of reviewed Shop Drawings prior to providing Demonstration and Training. Present to the Owner for review in ample time for use during Demonstration and Training.

1.06.2 The Contractor shall provide at his cost, two (2) digital sets of all the standard Manufacturer's hardware and software programming and Front End manuals for all control system devices, devices and the Front End equipment. The Contractor shall provide digital versions of all equipment servicing, Programmer's and Operating and Maintenance Manuals used by factory trained personnel or Contractor's staff for the equipment installed.

1.06.3 Contractor shall provide all manual updates and Applications Notes relevant to the installation during the warranty period.

1.06.4 The Contractor shall also create supplementary operations Manuals to reflect any customization and unusual design of control system and Front End not covered by the standard factory Manuals.

1.06.5 Describe in concise terms in the Working Language, all functional and operational requirements for the system. It shall not require knowledge of binary processor programming, electronic techniques, or control system theory to understand the description.

1.06.6 Include complete guidance and procedures for operation of the system. Provide step-by-step instructions for system start-up, back-up equipment operation and execution of all system functions and operating modes.

1.06.7 Hardware and software functions, interfaces and requirements shall be explicitly detailed for all system components in all system functions and operating modes. Person-machine interactions shall be functionally described.

1.06.8 Document the theory, design, interface requirements, and functions of all software modules and systems for Front End and all BAS devices. This shall include test and verification procedures and detailed description of program requirements and capabilities. Provide all data necessary to permit modification, relocation, or other reprogramming and to permit combination of new and existing software modules to respond to changing system functional requirements without disrupting normal system operation.

1.07 Maintenance Manual Requirements

1.07.1 The Contractor shall include all information required to service and maintain all control system and server hardware and software in optimum operating condition.

1.07.2 The Contractor shall provide four (4) copies of a site specific, customized digital Maintenance Manual on CDs. Contractor shall supplement the Manual with standard or factory supplied material.

1.07.3 Provide detailed documentation on:

1.07.3.1 Theory of BAS system operation, design philosophy and specific functions of the BAS system.

1.07.3.2 Full details of network communications, how data is stored on the network, the function of system gateways or node controllers.

1.07.3.3 Operator test or self-test of all system components and computer peripherals during each function and operating mode.

1.07.4 This Manual shall be organized by HVAC or building system and shall as a minimum, detail:

1.07.4.1 Safety precautions
1.07.4.2 Service schedules
1.07.4.3 Preventive maintenance procedures
1.07.4.4 Fault diagnosis procedures
1.07.4.5 Over-ride control on component failure
1.07.4.6 Re-calibration procedures
1.07.4.7 Components replacement procedures
1.07.4.8 Re-commissioning procedures

1.08 Manufacturer's Technical Data Requirements

1.08.1 Submittals for each manufactured item shall contain Manufacturer's equipment Specification sheet, equipment drawings, schematic diagrams, performance or characteristic curves and catalogue cut sheets. The manufacturer's name, trade name, catalogue model or number, nameplate data, size, layout dimension, capacity, and any other information necessary to establish contract compliance shall be included.

1.08.2 Information shall be submitted for all material, equipment and software the Contractor proposes to furnish for accomplishment of the Work.

1.09 Documentation Requirements

1.09.1 All documentation shall be site specific, i.e., containing information relevant to the Work.
1.09.2 Arrange submittals in the same sequence as these Specifications and reference the particular Specification provision for which each submittal is intended.
1.09.3 Four (4) copies of all documentation for each site shall be supplied on CDs.
1.09.4 Each CD shall have a full index. Each CD shall also contain a comprehensive index for all CDs in the documentation package. Clearly identify each CD's contents on the label and the box.
1.09.5 One (1) complete set of documentation for each site shall be furnished to the Owner at least three (3) weeks prior to training sessions, and system and equipment tests, and the remaining sets of documentation shall be furnished prior to the commencement of the third training session. Piecemeal submittal of data is not acceptable and shall not be reviewed by the Owner.
1.09.6 The final documentation packages shall include:

1.09.6.1 Digital copies of the Owner's existing drawings marked up to show As-Built conditions.
1.09.6.2 The Contractor shall provide soft copies of all AutoCAD™ drawings.

1.09.7 The Certificate of Total Completion shall not be given until all documentation required is satisfactorily provided.

1.10 As-Built Drawing Requirements

1.10.1 Keep a record set of Drawings on the site at all times recording any changes that occur. Submit these Drawings to the Owner upon completion of the Work. As-builts shall include circuiting and dimensions of cable from walls where buried. The Contractor shall assume all costs to have all changes transferred to AutoCAD™ As-Builts in a clear and legible manner.
1.10.2 Building layout drawings shall show all sensor locations, field device junction box and pull box locations, and alarm and monitoring stations. All main conduit runs shall be shown diagrammatically. The size and fill details shall be shown in diagrammatic form and amended to reflect the "As-Built" conditions.

1.10.2.1 Provide original B-size (11" x 17") drawing and soft copies of AutoCAD™ file(s) for all drawings for the Work.
1.10.2.2 Drawings shall fully illustrate and describe the entire installation, showing location of each of the following:

1.10.2.2.1 All pieces of equipment connected into the system (show as-installed device layout)
1.10.2.2.2 All terminal blocks (show the number of cable(s) or wire pairs between interconnected pieces of equipment, including terminal boards)
1.10.2.2.3 Riser block diagram for each building
1.10.2.2.4 Floor plan for each building
1.10.2.2.5 System plan block diagram
1.10.2.2.6 Zones served by AHUs, boilers, fan coils, refrigeration compressors, etc

1.10.2.3 Provide an As-Built schematic of circuit piping layouts (hot water, steam, glycol, etc.) c/w the BAS inputs and outputs for the entire building including makeup water connections, hand valves, gauges, drains, etc. Unless piping and valve changes are part of the Work, the Drawing need not show the layout of the piping after it leaves the boiler or mechanical room. Drawing does not have to be to scale.
1.10.2.4 Identify details by reference to sheet and detail numbers shown on schematics
1.10.2.5 Provide date of issuance and initials of person(s) preparing schematics
1.10.2.6 List terminal board identification: Provide a directory for all terminal boards describing the following for all points on the board:

1.10.2.6.1 Point number
1.10.2.6.2 Cable or wire code (pair colour, cable or wire number, etc.)
1.10.2.6.3 Equipment name and equipment location connected to the cable or wire pair

1.10.2.7 Submit a Certificate of Inspection from the local Inspection Authority upon completion of Work and include with Operating and Maintenance Manual.

1.10.3 Include copies of device wiring diagrams as they appear in the field.
1.10.4 System block diagrams shall identify all equipment interfaces and modules, including all modification and/or interfacing to the existing electric or electronic systems.
1.10.5 Points List Submittals shall identify points by device, I/O number, type of signal and range, name, connected device (model or catalogue number), and mechanical system.

1.10.6 Control program listings shall contain flow charts for each typical algorithm as well as a complete description of Control Sequences in lay person's terms.

1.10.7 A single line drawing of all power distribution and communications lines to control equipment and Level 0 devices shall be included.

1.11 Special Tools and Spare Parts

1.11.1 Provide spare parts, special tools, components, etc. to the Owner according to Table 1. Contractor is not required to provide spare parts for sensor and actuators provided by others in the Work.

TABLE 1 : SPECIAL TOOLS & SPARE PARTS

SPARE PART	WHERE REQUIRED
One spare set of fuses	For any equipment provided under the Work.
One spare set of MOVs (if used in the Work) or other lightning protection equipment	For each Binary Output provided under the Work and for each BAS system device network connection.
One spare set of BAS tub keys	For each key provided under the Work.
One spare set of special tools	For each special tool provided under the Work.

1.12 Access To Spare Parts for BAS System Devices

1.12.1 Parts stock availability shall be guaranteed for the equipment proposed for a minimum of seven (7) years from the date of Total Completion. Provide a signed letter from an authorized agent of the Control System Manufacturer confirming same.

2 - PRODUCTS

Not Used

3 - EXECUTION

Not Used

End of Section

25 00 79 INTEGRATED AUTOMATION – GENERAL REQUIREMENTS - DEMONSTRATION & TRAINING

1 - GENERAL

1.01 Training Requirements

1.01.1 Instruct the Owners in all aspects of the operations of systems and equipment.

1.01.2 Provide training to cover operation of the building BAS system and the software procedures to allow the Owner's personnel to add, modify, or create points, BAS loops, graphics or energy management programs. The instruction shall consist of both hands-on and classroom training at the project site. Training shall include a "Question Period" at the close of each session.

1.01.3 Supply tools, spare parts (if listed in 25 00 78 1.11.1), equipment and personnel to demonstrate and instruct operating and maintenance personnel in operating, controlling, adjusting, troubleshooting and servicing of all systems and equipment during regular work hours, prior to acceptance.

1.01.4 Manufacturers shall provide demonstrations and instructions on all equipment and materials.

1.01.5 Use final version of Operating and Maintenance Manual, "As-Built" drawings, audio visual aids, etc. as part of instructional materials. Owner's training shall not start until these documents are completed and shall be completed just prior to the Certificate of Total Completion being granted.

1.01.6 Contractor commissioning and assistance provided to the Owner during the trial usage period shall not count as training time.

1.01.7 Commissioning and time spent with Contractor's staff by Owner's personnel shall not substitute for nor count as training. Owner's personnel shall be allowed to participate in the commissioning process.

1.01.8 Obtain Owner's acceptance of instruction in writing after instructions to Owner is completed.

1.02 Instructor Qualifications

1.02.1 The Contractor shall provide competent instructors who shall give full instruction to the Owner's designated personnel in the adjustment, operation and maintenance, including pertinent safety requirements of the equipment and systems specified, with emphasis on:

1.02.1.1 How to use and find information in documentation

1.02.1.2 System operational procedures for all modes of operation including: warm-up, cool-down, emergency, seasonal change-over, occupied, unoccupied, etc.

1.02.1.3 Acceptable tolerances for system adjustment in all operating modes

1.02.1.4 Procedures for dealing with abnormal conditions and emergency situations for which there is a specified system response

1.02.1.5 Troubleshooting procedures to deal with equipment malfunction or failure

1.02.2 Arrange and pay for services of Manufacturers' representatives required for instruction on specialized portions of the installation, maintenance and/or operation.

1.02.3 Owner shall have the right to approve or reject the instructors based on their qualifications.

1.02.4 Contractor shall permit the Owner to videotape the training sessions for the Owner's internal use such as training new employees.

1.03 Training Plan

1.03.1 Submit the training plan for approval by the Owner thirty (30) days prior to the first scheduled training session. The plan shall cover:

1.03.1.1 Proposed curriculum and teaching methods.

1.03.1.2 Required entering skills. It shall be the responsibility of the Owner to ensure that the trainees have the required entering skills prior to taking the Contractor's course.

1.03.2 The duration of the training period shall not be less than thirty (30) hours of general instruction, and not less than ten (10) hours of site specific instruction for the Work, and not limited to a consecutive period. All training shall take place during normal working hours and shall not exceed seven (7) hours per day. Travel time to sites or place of training shall not be counted as training time.

1.03.3 Co-ordinate all sessions with the Owner and/or his representatives. The Owner and/or the Contractor shall provide written notification at least three (3) working days prior to cancellation or postponement of the training session.

1.03.4 Documentation specified in Section 25 00 78 shall be used as source information for the training sessions.

1.03.4.1 Provide a training manual for each trainee, covering in detail the data included in each training program, before training shall commence.

1.03.4.2 If the Contractor wishes to use visual aids such as video tape, slides, overhead, etc. as a part of the training course fulfilment, these visual aids or copies of them shall be made a part of the documentation package for future reference, refresher or retraining.

1.03.4.3 Provide training source material for a minimum of four (4) of the Owner's operations personnel at least four (4) weeks prior to start of session.

1.03.5 Training courses shall be presented in the form of one (4) sessions.

1.03.6 This session shall occur prior to the start of the system test for Substantial Completion. This course shall all include but not be limited to the following:

1.03.6.1 System architecture
1.03.6.2 Equipment operation
1.03.6.3 System communication protocol
1.03.6.4 Maintenance management
1.03.6.5 Alarm management

1.03.7 All training shall be clearly documented on a daily basis, detailing number of hours of instruction, material covered, trainees' names and instructor(s') name. At the end of each training day, this information shall be authorized by the Owner's designated representative and by the Contractor.

2 - PRODUCTS

Not Used

3 - EXECUTION

Not Used

End of Section

25 05 01 INTEGRATED AUTOMATION - COMMON WORK RESULTS - GENERAL

1 - GENERAL

1.01 General Conditions

1.01.1 The Specification shall be read as a whole by all parties concerned. Sectioning of the Specification is for convenience only; each section may contain less or more than the completed Work of any Trade. The Contractor is solely responsible to understand the scope of Work, and make clear to Subcontractors the extent of their Work in this Section.

1.01.2 Sections of these Specifications are not intended to delegate functions or to delegate Work and supply to any specific trade. The Work shall include all labour, materials, equipment and tools required for a complete and working installation as described in the Drawings and these Specifications.

1.02 General Requirements

1.02.1 Provide all remote sensing points and instruments as indicated and/or required for a fully functional BACnet Interface Device to the Equipment Supplier's Modbus Device that meets the Specification requirements.

1.02.2 All equipment shall be installed according to Manufacturers' instruction by trained journeymen (Provincially certified and factory trained).

1.02.3 All employees and Subcontractors of the Contractor must follow and abide by all rules and regulations set forth by local Workplace Safety and Health authorities.

1.02.4 See Section 25 00 11 for more details on general installation requirements.

1.02.5 BAS devices and Front End software shall use English units in calculations, displays, etc. Selection of units on a point by point basis shall be at the Owner's discretion. Verify requirements with Owner before assignment of units.

1.03 Contract Drawings and Site Examination

1.03.1 Examine the Mechanical Drawings to ensure that the Work under this Contract can be satisfactorily carried out. Report any discrepancies to the Owner prior to submission of Bid.

1.03.2 Any Drawings supplied by the Owner are performance drawings, are diagrammatic in nature and are intended to convey the scope of Work and to indicate general arrangement and approximate location of apparatus, fixtures and pipe runs. The Drawings do not intend to show architectural and structural details.

1.03.3 Do not scale Drawings. Obtain accurate dimensions by site measurement.

1.03.4 Not all required offsets, fittings and accessories are shown in the Drawings. Investigate structural and finish conditions affecting this Work and arrange Work accordingly, providing such fittings, valves and accessories required to meet the conditions. Conserve head room and interfere as little as possible with the free use of space.

1.03.5 Examine the site and local conditions, and verify that the supplied equipment is suitable for its intended use in the new construction.

1.03.6 Visit and inspect the site of the Work to verify location and elevation of existing services which affect Work of this Contract (water, electrical, sanitary, ductwork, etc.) before proceeding with Work.

1.04 General Installation Requirements

1.04.1 Include in the Work all requirements of Manufacturers' devices as shown on the Shop Drawings.

1.04.2 Install all equipment and apparatus regarding wiring, maintenance, adjustment or eventual replacement with due allowance therefore.

1.04.3 Replace all Work unsatisfactory to the Owner without extra cost.

1.04.4 Terminations shall use standard conduit box with slot screwdriver compression connector block unless otherwise specified.

1.04.5 Leave space clear and install all Work to accommodate future materials and/or equipment as indicated and to accommodate equipment and/or materials supplied by other trades. Verify spaces in which Work shall be installed. Install pipe runs etc., to maintain maximum headroom and clearances, and to conserve space in shaft and ceiling spaces.

1.04.6 Ensure that all equipment, fixtures and devices requiring normal maintenance and/or cleaning are mounted such that they are fully serviceable. Provide necessary isolation, access doors, union type fittings and the like to facilitate service work.

1.04.7 Protect BAS devices or other equipment from sprinkler damage or from damage when equipment needs to be drained for servicing.

1.04.8 Electrical outlets, switches or other electrical equipment shall be moved to any point within a ten (10) foot radius when relocation is requested by the Owner before the Work has been substantially completed, without additional cost.

1.04.9 Branch circuit wiring shall be installed with circuits arranged exactly as shown on the Drawings. Cable runs shall be modified to suit the installation.

1.04.10 Provide sufficient slack and flexible connections to allow for vibration of piping and equipment.

1.04.11 Verify integrity of all wiring to ensure continuity and freedom from shorts and grounds.

1.04.12 All equipment, installation, and wiring shall comply with acceptable industry Specifications and standards for performance, reliability, and compatibility and be executed in strict adherence to local codes and standard practices.

1.04.13 All BAS devices, transducers and relays shall be installed in approved enclosures.

1.04.14 All field devices shall be properly calibrated and tested for performance and accuracy.

1.04.15 Alter the locations of materials and/or equipment that do not necessitate additional material as directed at no additional cost.

1.04.16 All hardware, interface and junction boxes shall be installed so they are easily accessible for maintenance. Hardware etc. that is installed in locations the Owner deems to be unsafe or inaccessible shall be relocated at the Contractor's expense.

1.05 Integration of BACnet Interfaces

1.05.1 See 25 20 nn.nn Specification Sections for details.

1.06 Manufacturers' Instructions

1.06.1 Unless otherwise indicated in the Drawings and Specifications, install or erect products in accordance with Manufacturers' instructions.

1.06.2 Notify Owner in writing of any conflict between Manufacturers' instructions and Contract Documents. Owner shall designate which document shall be followed.

1.06.3 Improper installation or erection of products due to failure in complying with these requirements authorizes the Owner to require removal and re-installation at no increase in Bid Price.

1.07 Workmanship

1.07.1 Workmanship shall be the best quality, executed by workers experienced and skilled in the respective duties for which they are employed. Contractor shall immediately notify the Owner if required Work is such as to make it impractical to produce required results.

1.07.2 Install equipment, ductwork, conduit, cables and piping in a manner to present a neat appearance and to function properly to the acceptance of the Owner.

1.07.2.1 Install cable runs parallel and perpendicular in chases, behind furring or above ceilings.

1.07.2.2 Install ducts and pipes parallel and perpendicular to building planes.

1.07.2.3 Install piping and ductwork concealed in chases, behind furring or above ceiling.

1.07.2.4 Install exposed system neatly and group to present a neat appearance.

1.07.3 Decisions as to the quality or fitness of workmanship in cases of dispute rest solely with the Owner, whose decision is final and binding on the Contractor.

1.08 Standard Of Material

1.08.1 Control devices of each category to be of same type and manufacturer.

1.08.2 External trim materials to be corrosion resistant. Internal parts to be assembled in watertight, shockproof, vibration proof, and heat resistant assembly, as required to suite the application.

1.08.3 Provide new material and equipment of first class quality, delivered, erected, connected and finished in every detail and supplied with the acceptance of the Owner. Assume responsibility of ensuring that equipment provided performs as specified.

1.09 Field Quality Control

1.09.1 All electrical Work to be carried out by qualified, licensed electricians or apprentices as per the conditions of the National, State and Local codes and laws.

1.10 Equipment Power Protection

1.10.1 Provide power line filtering for all Level 0 equipment and BAS system devices either internally or as an external component.

1.10.2 Provide an always online double conversion Uninterruptible Power Supply (UPS) for all Level 1 BAS devices and Level 0 equipment. Use emergency power if equipment must operate during emergencies. Co-ordinate power requirements with Division 26.

1.11 Sprinkler Proof Equipment

1.11.1 All electrical equipment installed in areas where sprinklers are also installed shall be constructed so that exposure to water from the sprinkler heads shall not impair the effectiveness of the BAS system equipment.

1.11.2 Sprinkler proof or relocate all BAS devices that are within 3 m [10 ft] of a backflow preventer, sprinkler head or water relief valve.

2 - PRODUCTS

Not Used

3 - EXECUTION

Not Used

End of Section

25 05 13 INTEGRATED AUTOMATION - COMMON WORK RESULTS - CONDUCTORS & CABLES

1 - GENERAL

1.01 General Conditions

1.01.1 Electrical material and installation shall be in accordance with the appropriate requirements of all applicable Sections of the current edition of the National Electrical Code, State and Local codes and regulations and the local Electrical Authority. Refer to Electrical Division for requirements for wiring installation.

2 - PRODUCTS

Not Used

3 - EXECUTION

3.01 Installation

3.01.1 Refer to Stanley Consultants documents.

End of Section

25 05 26 INTEGRATED AUTOMATION - COMMON WORK RESULTS - GROUNDING & BONDING

1 - GENERAL

1.01 General Conditions

1.01.1 Obtain and comply with Manufacturer's installation instructions.

2 - PRODUCTS

Not Used

3 - EXECUTION

3.01 Grounding

3.01.1 Refer to Stanley Consultants documents.

End of Section

25 05 28 INTEGRATED AUTOMATION - COMMON WORK RESULTS - PATHWAYS

1 - GENERAL

1.01 General Conditions

1.01.1 Obtain and comply with Manufacturer's installation instructions.

1.02 Electrical Installation

1.02.1 Refer to Stanley Consultants documents.

End of section

25 05 53 INTEGRATED AUTOMATION – COMMON WORK RESULTS - IDENTIFICATION

1 - GENERAL

1.01 General Conditions

1.01.1 All devices and equipment, whether installed by the Contractor or existing, that is used for monitoring or control by the BAS system, shall be clearly identified by a permanently attached label, tag or nameplate as specified below. Locate identification in a conspicuous location.

1.01.2 Each inscription shall be in the Working Language, identifying the device type, point number and corresponding zone it controls. All labelling shall be consistent with the naming convention and methods approved by the Owner via the Shop Drawing process.

1.01.3 No labelling (hardware and software) shall begin until approved by the Owner.

2 - PRODUCTS

2.01 Labels

2.01.1 Labels shall be embossed plastic with 6 mm [¼ in] high letters unless specified otherwise. Allow for an average of twenty-five (25) letters per label.

2.02 Tags

2.02.1 Provide brass or lamacoid numbered tags, 32 mm [1¼ in] diameter with stamped numbers secured by brass jack chains, brass "S" hooks or one piece nylon ties around the valve stem-on all valves that are controlled by the BAS system. Rectangular waterproof luggage style tags are an acceptable alternate. Prepare an approved list detailing the valve location, tag numbers and purpose it serves. Mount one (1) copy of this list in a glazed frame where advised by the Owner and provide additional copies for the Operating and Maintenance Manuals.

2.03 Nameplates

2.03.1 Nameplates shall be engraved plastic laminate with bevelled edges, either screwed or riveted in place in accordance with the Contract Documents.

2.03.2 Lamacoid shall consist of a 3 mm [1/8 in] thick plastic engraving sheet with a white face and a black core.

NAMEPLATE SIZES	DIMENSIONS	LINES	LETTER HEIGHT
Size 1	10 mm x 50 mm	1	3 mm
Size 2	12 mm x 70 mm	1	5 mm
Size 3	12 mm x 70 mm	2	3 mm
Size 4	20 mm x 90 mm	1	8 mm
Size 5	20 mm x 90 mm	2	5 mm
Size 6	25 mm x 100 mm	1	12 mm
Size 7	25 mm x 100 mm	2 lines	6 mm high letters

2.04 Naming Conventions

2.04.1 Use device identification that is consistent with the established naming conventions at the Place of Work. Co-ordinate identification of equipment and systems supplied by other Divisions to ensure that identical naming conventions are used.

2.04.2 The BAS device system network shall support up to a 32 character Object Name consisting only of ASCII printable characters. The convention to be used for all Object Names is as follows:

2.04.2.1 Object Name format shall be in the form of LCB#-AAAAAA-NNN-AAAAAAAAAAAAA, where "A" designates an alphanumeric character and "N" is a digit from 0 to 9. The underscore character is not allowed so all names are compliant with Domain Naming conventions.

2.04.2.2 The next three digits LCB# followed by a dash "-" designate the Lake Co Building Number. If less than three digits are used, the front of the Lake County Building Number must be padded with leading zeroes.

2.04.2.3 The next six alphanumeric characters AAAAAA followed by a dash "-", designate the equipment or system name. No spaces are allowed in the equipment/system name; however the name length may be shortened as required to no less than three alphanumeric characters.

2.04.2.4 The three digits NNN followed by a dash "-" designate the System Number. If less than three digits are used, the front of the System Number must be padded with leading zeroes.

2.04.2.5 The final thirteen alphanumeric characters AAAAAAAAAAAAA designate the device or sensor connected to that system. No spaces are allowed in the device/sensor name; however the name length may be shortened as required to no less than six alphanumeric characters.

2.04.3 This naming convention applies to all objects provided by this Contractor as well as to all objects that are mapped from the BACnet devices provided by others in the Work.

2.04.4 If the Contractor's panel does not support a maximum 32 character object name, map all objects to a BAS panel that does support this requirement.

2.05 Identification Conventions

2.05.1 Co-ordinate with equipment identification systems defined in other Divisions of the Specification.

2.05.2 Provide apparatus (including electric motors) with proper nameplates affixed thereto, showing the size, name of equipment, serial number and all information usually provided, which also includes voltage, cycle, phase and horsepower of motors and the name of the Manufacturer and his address.

2.05.3 Identify all new and reused devices, sensors etc. Use lamacoid plastic plates of an approved size complete with bevelled edges having engraved white 3 mm [1/8 in] letters on black background giving the name of the equipment or equipment service and its number, e.g., "Main Circulating Pump P-1", "Radiation Valve V-1". Fix to equipment using pop rivets or sheet metal screws. Stick-on nameplates of any type are not acceptable under any circumstances.

2.05.4 Identify all conduits, cable junction boxes and pull boxes in the colour assigned by the Owner.

2.05.5 Identify locations of all control devices installed in the ceiling space on the T-bar or access door directly below it, with a dot or star in the Contractor's corporate colours.

2.06 Panel Identification

2.06.1 Each control device cabinet shall be identified using a Size six (6) lamacoid label.

2.06.2 Nameplates for terminal cabinets and junction boxes to indicate system and/or voltage characteristics

2.06.3 Identify equipment with Size three (3) labels engraved "ASSET INVENTORY No. [_____]". Number as directed by the Owner.

2.06.4 Disconnects, starters and contactors: indicate equipment being controlled and voltage.

2.06.5 Terminal cabinets and pull boxes: indicate system and voltage.

2.06.6 Transformers: indicate capacity, primary and secondary voltages.

2.06.7 Provide apparatus (including electric motors) with proper nameplates affixed thereto, showing the size, name of equipment, serial number and all information usually provided, which also includes voltage, cycle, phase and horsepower of motors and the name of the Manufacturer and his address.

2.06.8 Identify all new and reused devices, sensors etc. Use lamacoid plastic plates of an approved size complete with bevelled edges having engraved white 3 mm [1/8 in] letters on black background giving the name of the equipment or equipment service and its number, i.e., *"Main Circulating Pump PU-1", "Radiation Valve V-1", "Air Handling Unit AHU-1", "Motor M-1",* etc. Fix to equipment using pop rivets or sheet metal screws. Stick-on nameplates of any type are not acceptable under any circumstances.

2.06.9 Provide all valves that are new or re-used with brass numbered tags, 16 mm [5/8 in] diameter with stamped numbers secure be chains to the valve. Prepare an approved list detailing the valve location, tag numbers and purpose it serves. Mount one (1) copy of this list in a glazed frame where advised by the Owner and provide additional copies for the Operating and Maintenance Manuals.

2.06.10 Stencil on identification approved by Owner complete with flow arrows for all piping installed during the Work.

2.07 Panel Wiring Diagrams

2.07.1 Each BAS device shall have a permanent, non-fading, "As-Built" interconnection wiring diagram of the complete field installed system, with properly identified device model and catalogue number of each system component and device and list of the meaning of the alarm and other lights.

2.07.2 Clearly identify all I/O address numbers and associated BAS point name on each input and output.

2.07.3 The diagram shall be sealed by plastic laminate and affixed to the inside of the field device.

2.07.4 All device and junction box terminal strips shall be fully labelled to identify wiring connections.

2.08 Warning Labels

2.08.1 Warning labels shall use white lettering on a red background on a Size 7 Nameplate.

3 - EXECUTION

Not Used

End of section

25 08 00 INTEGRATED AUTOMATION - CONTROLS COMMISSIONING

1 - GENERAL

1.01 Summary

1.01.1 Section Includes:

1.01.1.1 Methods and procedures for start-up, verification and commissioning of all control system components and systems and includes:

1.01.1.1.1 Start-up testing and verification of systems
1.01.1.1.2 Check out demonstration or proper operation of components

1.02 Commissioning

1.02.1 Do commissioning in accordance with Section 25 08 00.
1.02.2 Carry out commissioning under direction of Owner and in presence of Owner [and Commissioning Manager].
1.02.3 Inform, and obtain approval from, Owner in writing at least fourteen (14) days prior to commissioning or each test. Indicate:

1.02.3.1 Location and part of system to be tested or commissioned.
1.02.3.2 Testing/commissioning procedures, anticipated results.
1.02.3.3 Names of testing/commissioning personnel.
1.02.3.4 Correct deficiencies, re test in presence of Owner until satisfactory performance is obtained.
1.02.3.5 Acceptance of tests shall not relieve Contractor from responsibility for ensuring that complete systems meet every requirement of Contract.
1.02.3.6 Load system with project software.
1.02.3.7 Perform tests as required.

1.03 Completion Of Commissioning

1.03.1 Commissioning to be considered as satisfactorily completed when objectives of commissioning have been achieved and reviewed by Owner.

1.04 Issuance Of Final Certificate of Completion

1.04.1 Final Certificate of Completion shall not be issued until receipt of written approval indicating successful completion of specified commissioning activities including receipt of commissioning documentation.

2 - PRODUCTS

Not Used

3 - EXECUTION

3.01 Procedures and Requirements

3.01.1 The Contractor is responsible for commissioning all new and existing points integrated into the Work.
3.01.2 Through the commissioning process, the Contractor shall, to the satisfaction of the Owner:

3.01.2.1 Verify the installation, operation and functional performance of BAS systems hardware and software under the appropriate seasonal conditions, for compliance with design intent and the Contract Documents.
3.01.2.2 Document the data generated by tests and inspections.
3.01.2.3 Verify accuracy and logical organization of Operation and Maintenance Manuals, As-Built drawings, spare parts, special tools and documentation.

3.01.3 A complete static and dynamic commissioning test shall be performed for all hardware and software points at each site, all BAS devices and for all Level 0 devices by the Contractor.

3.01.3.1 Static tests: Commissioning tests shall consist of a full range of static tests carried out to verify that all hardware points, software, devices, transducers, all Level 0 devices and other components, function in accordance with the Specifications.

3.01.3.2 Dynamic tests: System performance shall be checked under dynamic conditions which simulate varying load and operating modes, including pre-conditioning, start-up, normal operating, emergency and fail-safe modes, shut-down interlocks and lock-outs defined in the Control Sequences.

3.01.4 The Contractor shall provide all commissioning test equipment required.

3.01.5 The Owner shall be given written notice at least seven (7) days in advance of the dates of all tests. Detail the locations and parts of system(s) being tested, the test procedures proposed and the anticipated results.

3.01.6 Acceptance of test procedures outlined in detail in Section 25 08 00 by the Owner shall not relieve the Contractor of responsibility for the complete system meeting the requirements of these Specifications after installation.

3.01.7 Final acceptance tests shall be performed for individual site(s) and for the BAS system as a whole.

3.01.7.1 Upon complete installation of the BAS system, the Contractor shall start up the system and perform all necessary testing and run diagnostics to ensure proper operation.

3.01.7.2 An acceptance test in the presence of the Owner(s) and/or Engineer shall be performed.

3.01.7.3 Upon successful completion of these tests and receipt of all documentation, training, etc., the system parts will be accepted for Total Completion and placed under warranty.

3.01.8 All testing shall be completed at least fourteen (14) days before system turnover. If any check or test cannot be accomplished for seasonal reasons, lack of occupancy, or for other reasons, this fact shall be noted along with an indication of when the test will be rescheduled.

3.02 Static Commissioning Input and Output Hardware

3.02.1 There are no hardware points in the Work. Contractor is responsible for verifying the object list provided by the Equipment Supplier. Allow 8 hours for this Work.

3.03 Static Commissioning BAS System Software

3.03.1 The Owner shall review the final versions of all BAS system software to ensure that the software complies with the Control Sequences in every respect. The Contractor shall provide assistance and technical manuals as required.

3.03.2 Contractor shall allocate sufficient time to review the BAS system software with the Owner and shall provide the necessary documentation or other information as required to enable the Owner to conduct a thorough review of the software.

3.03.3 The Contractor shall provide an electronic copy of the database of each controller. The file(s) can be ASCII .PRN files or in Word or WordPerfect format. Provide software to read the database if required.

3.03.4 The Contractor shall provide a paper copy of the database of each controller printed on single sided paper.

3.03.5 The Contractor and the Owner shall commission the Front End graphics and reports.

3.04 Static Commissioning BAS System Device Network and Level 0 Devices

3.04.1 Each BAS device shall be checked for compliance with standalone and fail-safe requirements, proper grounding and other features. All features listed in Section 25 13 16 shall be checked and verified by the Contractor in the presence of the Owner. Devices that do not pass the standalone tests shall be replaced at no cost to the Owner. In this context, “standalone” means that the device, with the network cable disconnected, shall accurately maintain reference time, continue trending data, maintain communications with any devices connected to it and control the equipment connected to the device.

3.04.2 The features of the Level 0 software listed in Section 25 15 11 shall be checked and verified in the presence of the Owner.

3.04.2.1 Approved software packages shall be entered into the appropriate Level 0 hardware, and then debugged.

3.04.2.2 Prior to full operation, a complete commissioning test shall be performed in the presence of the Owner. The demonstration, having satisfactorily met previously approved submittals, shall, with the Owner’s approval, allow commissioning of the Front End.

3.04.2.3 The printers and other Level 0 ancillary devices shall undergo the same testing.

3.05 Dynamic Commissioning The Work As A Whole

3.05.1 With all points enabled and automatically controlled, all systems and associated programs shall operate for seven (7) consecutive days on history/trend logs to verify all types of conditions that occurred in the period.

3.05.2 All history/trend logs shall be set up by the Contractor and shall be submitted to the Owner for review and approval.

3.05.3 The Contractor shall provide a minimum of seven (7) day's worth of trend data to verify that the following functions:

3.05.3.1 Optimum start/stop data showing that preheat, purge and precool functions.

3.05.3.2 Reset schedules for setpoints.

3.05.3.3 The coast function.

3.05.3.4 Free cooling during the occupied cycle.

3.05.3.5 Control loop stability.

3.05.3.6 Contractor shall provide trend data at intervals and duration specified by the Owner at the start of the dynamic commissioning process to determine that the above Control Sequences functions perform to his satisfaction.

3.05.4 This condition of the commissioning process is met when all alarms and system values are appropriate for the defined Control Sequences.

3.05.5 Verify Year 2036 Compliance. All equipment provided in the Work shall be tested to meet Year 2036 compliant.

PROJECT NAME: Lake County Emergency Generator for Adult Probation **LEVEL 0 HARDWARE & SOFTWARE**
COMMISSIONING COMPLETED BY (*Print Name*): _____.

Level 0 Device conforms to cutsheet # _____ (provide cutsheet)

SOFTWARE PACKAGES LOADED AND CONFIGURED	REV'D
Software Package Name _____ Version _____ Software operational as per Specification ____. Software Package Name _____ Version _____ Software operational as per Specification ____. Software Package Name _____ Version _____ Software operational as per Specification ____. Software Package Name _____ Version _____ Software operational as per Specification ____. Software Package Name _____ Version _____ Software operational as per Specification ____.	

FRONT END CAPABILITY AND PROGRAMMING	REV'D
_____ **Multitasking:** *Test all application programs for concurrent operation with Front End software. Typical test is simultaneous upload or download of panel data/programs, printing report or graphic, word processing, spreadsheet recalculation, receiving alarms, etc.* _____ **Panel Management:** *Verify the ability to manage panel features.* _____ **Security:** *Verify all Front End security measures have been implemented.* ____ **Alarm Buffering:** *Verify alarm buffering for Operator "signed on" and "signed off" intervals.* _____ **Reporting:** *Verify reporting capabilities as defined in Specification* _____ **Command Trace/Archive Reports:** *Verify capability to trace program execution, Operator override commands, etc. and historical logging of this information as detailed in Specification* _____ **Utility Reports:** *Utility usage reporting as defined in Specification* _____ **Trend Reports:** *Trending as defined in Specification* _____ **Runtime Reports:** *Runtime reporting as defined in Specification*	

GRAPHICS	REV'D
_____ **Network Architecture:** *Provide network architecture graphics penetration path and cross-linkages to systems and panel graphic displays; sequence of operations; trend, runtime and scheduling displays; etc.* _____ **Building Systems:** *Provide building systems and floor layout graphics penetration path and cross-linkages to network architecture and panel graphic displays; sequence of operation; trend, runtime, and scheduling displays;* _____ **Alarms Display:** *Alarms are prioritised and "float to top" as they arrive while logged into Front End.* _____ **Dynamic Trend Display:** *Trends are pre-configured to allow trending of all parameters in distinct control loops. Up to six points can be shown in each trend display at Operator definable sampling rate.*	
_____ **Printing:** Provide a colour printout of each graphic complete with notations of embedded linkages to other graphic tree penetration paths.	

LEVEL 0 HARDWARE	REV'D
Level 0 hardware operation verified *(stroke out device if not applicable)*: Router ☐ Yes ☐ No Switch ☐ Yes ☐ No Gateway ☐ Yes ☐ No Server ☐ Yes ☐ No Workstation ☐ Yes ☐ No Graphics printer ☐ Yes ☐ No Alarm printer ☐ Yes ☐ No Portable Operator Terminal ☐ Yes ☐ No Wireless text message device ☐ Yes ☐ No	
Factory Manuals provided: Programming ☐ Yes ☐ No Operator Manual ☐ Yes ☐ No Front End Manual ☐ Yes ☐ No Customized Maintenance Manual complete ☐ Yes ☐ No	
Training: Front End function and operation covered during the training courses ☐ Yes ☐ No Client initials _____.	

REVIEWING ENGINEER'S SIGNATURE _____ **DATE** _____
AUTHORISED CONTRACTOR'S SIGNATURE _____ **DATE** _____
AUTHORISED ENGINEER'S SIGNATURE _____ **DATE** _____

25 13 16 INTEGRATED AUTOMATION - CONTROL & MONITORING NETWORK - INTEGRATION PANELS/DEVICES

1 - GENERAL

1.01 General Conditions

1.01.1 All materials and equipment used shall be standard components, regularly manufactured for this and/or similar systems. No materials or equipment shall be custom designed especially for this project, nor shall this equipment be "BETA" equipment unless expressly approved by the Owner (BETA provisions for BACnet features are waived).

1.01.2 Contractors shall read the BACnet sections of the Specification in conjunction with the non-BACnet sections to determine the scope of the BACnet Work requirements

1.01.3 The terms "BAS panels" or "panels" and "device" are used interchangeably. The term "device" applies to a BAS panel that is a native BACnet panel that uses BACnet objects and services. The term "device" is also used to describe computers or other equipment provided in the Work that use BACnet objects and services. The terms Building Automation System (BAS) and Direct Digital Control system (BAS) are used interchangeably in this Specification.

1.01.4 Contractor shall provide a BACnet/IP device suitable for mapping in objects from the Generator and Transfer Switch. Allow for 1000 objects.

2 - PRODUCTS

2.01 BAS System Device Network - Definition of Levels

2.01.1 The four (4) levels of control devices in the BAS system architecture shall be defined as follows.

2.01.1.1 Level 0:

2.01.1.1.1 This level includes Servers, Workstations (WS) and Portable Operator Terminals (POT) c/w Front End and other software specified herein, all associated peripheral devices such as the alarm printer, graphics printer, display devices, and all associated communications devices.

2.01.1.1.2 The following protocols are considered acceptable network communications protocols:

2.01.1.1.2.1 BACnet/IP

2.01.1.1.3 Application of the Level 0 device definition to BACnet device profiles

2.01.1.1.3.1 BACnet B-OWS devices are considered Level 0 devices if they support BACnet objects and services listed in the Specification for this device.

2.01.1.1.3.2 BACnet B-AWS devices are considered Level 0 devices if they support BACnet objects and services listed in the Specification for this device.

2.01.1.1.3.3 BACnet B-LSWS devices are considered Level 0 devices if they support BACnet objects and services listed in the Specification for this device. "Support" is defined as complying with:

2.01.1.1.3.3.1 Listed or in the process of being listed as a UUKL-864 device.

2.01.1.1.3.3.2 Comply with the BACnet Life Safety objects and services that the BACnet standard defines as mandatory.

2.01.1.1.3.4 BACnet B-BC devices that function as Web servers and which provide for programming tools on board the device for programming the device itself plus any devices connected to it are considered Level 0 devices. This Specification outlines where B-BC devices may be used as Level 0 devices in the Work. BACnet B-BC devices shall not be used in the Work as Level 0 devices without written permission of the Owner.

2.01.1.2 Level 1:

2.01.1.2.1 This level includes all BAS devices that communicate on a network using peer-to-peer protocols such as contention, token passing or token interrupt. The definition of peer-to-peer is found in the references listed in 25 00 42 1.04.20. The Owner will not consider equipment peer-to-peer unless the equipment meets all the referenced definitions.

2.01.1.2.2 The following protocols are considered acceptable peer-to-peer network communications protocols:

2.01.1.2.2.1 BACnet MS/TP where the devices operate as master devices

2.01.1.2.3 Level 1 devices may also perform the functions of routers, protocol convertors, network interface devices. This last device is also called a "node controller", " network extender device" or "area controller". Multiple layers of Level 1 device networks connected via these devices shall be considered a Level 1 device provided the top level device and all the devices below this device meet all of the criteria listed above for Level 1 devices.

2.01.1.2.4 Level 1 devices provide the master communications control for connected networks of Level 1A, 2/2A and 3/3A BAS devices.

2.01.1.2.5 Level 1 devices shall meet all the following minimum requirements:

2.01.1.2.5.1 Meet the memory requirements for programming, trending and alarming required in the Work.

2.01.1.2.5.1.1 Devices that exclusively use canned, application specific, or template style programming shall be considered Level 3 or 3A devices.

2.01.1.2.5.2 All other peer-to-peer devices that do not meet all these minimum requirements shall be considered Level 1A devices in the Specification Documents.

2.01.1.2.6 Application of the Level 1 device definition to BACnet device profiles.

2.01.1.2.6.1 Application to BACnet B-BC devices:

2.01.1.2.6.1.1 BACnet B-BC devices are considered Level 1 devices if they support BACnet objects and services listed in the Specification for this device.

2.01.1.2.6.1.2 BACnet B-BC devices residing as Master devices on a BACnet Master Slave/Token Passing (MS/TP) LAN are considered Level 1 devices if they meet all the criteria listed herein.

2.01.1.2.6.1.3 BACnet B-BC devices may act as system routers, protocol convertors, network interface devices. These devices are also referred to as "node controllers", " network extender devices" or "area controllers". They shall be considered Level 1 devices if they meet all the criteria listed herein. The same requirements apply to the B-BC devices connected to these devices.

2.01.1.2.6.1.4 BACnet B-BC devices that that perform the function of slave proxy devices shall be considered Level 1 devices if they meet all the criteria listed herein.

2.01.1.2.6.1.5 BACnet B-BC devices shall also provide both client and server functionality in order to be a Level 1 device.

2.01.1.2.6.2 Application to BACnet B-AAC devices:

2.01.1.2.6.2.1 BACnet B-AAC devices are considered Level 1A devices if they support BACnet objects and services listed in the Specification for this device.

2.01.1.2.6.2.2 BACnet B-AAC devices shall meet all requirements for the Level 1A devices listed herein.

2.01.1.2.6.3 Application to BACnet B-ASC devices:

2.01.1.2.6.3.1 These devices are considered Level 3 or 3A devices.

2.01.1.3 Level 2:

2.01.1.3.1 This level shall include all BAS devices that rely on a Level 1/1A BAS device for exchange of information with all other BAS devices.

2.01.1.3.1.1 Level 2 BAS devices communicate with Level 1/1A BAS devices using a request/response or poll/poll response protocol. The definition of request/response or poll/poll response protocol is found in the references listed in clause 25 00 42 1.04.20.

2.01.1.3.1.2 Level 2 devices shall operate in a standalone mode using the last known values passed to them by the Level 1/1A devices to which they are connected.

2.01.1.3.1.3 Level 2/2A devices may be devices that use a proprietary or a legacy protocol. The Owner will not consider equipment as request/response or poll/poll response unless the equipment meets all the referenced definitions for Level 2 devices.

2.01.1.3.2 Level 2 devices are not allowed in the Work.

2.01.1.4 Level 3:

2.01.1.4.1 This level shall include all BAS devices that rely on higher level devices, gateways or servers for exchange of information with all other BAS devices. Level 3 BAS devices communicate with the higher level BAS devices using a peer-to-peer protocol or a non-peer-to-peer protocol.

2.01.1.4.2 Level 3/3A devices do not use the same programming language as the Level 1/1A and 2/2A devices. They are referred to as Application Specific Controllers (ASCs) in this Specification and normally have "canned" programming routines or use a configuration menu as the programming method.

2.01.1.4.3 Level 3 devices are Application Specific Controllers (ASCs) that support dynamic device binding. Level 3A devices Application Specific Controllers (ASCs) that support manual device binding.

2.01.1.4.4 Terminal device controllers (e. g., VAV boxes) that are fully programmable with the same programming language as the Level 1 devices shall be considered Level 1, 1A, 2 or 2A devices, depending on how these devices meet the other criteria listed herein.

2.01.1.4.5 Level 3 devices are not allowed in the Work.

2.02 BAS System Device Network - Support for BACnet

2.02.1 All BAS devices provided by the Contractor in the Work shall support all mandatory and shall support all optional properties of all objects and all services as defined as BACnet Interoperability Building Blocks (BIBBs) as listed in the ANSI/ASHRAE 135-2008. This includes any Addenda issued up to the time of Bid, or as, required to comply with the Sequences of Operation.

2.02.1.1 The following clauses apply as a project specific condition:

2.02.1.1.1 All optional properties of all standard BACnet objects required to meet the Sequence of Operations shall be supported.

2.02.1.1.2 All properties that must be writable to meet the Sequence of Operations shall be writable. If the property is writable, then all data types shall be supported.

2.02.1.1.3 All forms of a BACnet service required to meet the Sequence of Operations shall be supported.

2.02.2 Support the following BACnetEngineeringUnits:

2.02.2.1 Level 0 devices shall support all BACnetEngineeringUnits required in the Work to meet the Sequence of Operations.

2.02.2.2 Level 1/1A BAS devices shall support all BACnetEngineeringUnits required in the Work to meet the Sequence of Operations.

2.02.2.3 Level 2/2A BAS devices need not support BACnetEngineeringUnits required in the Work providing the data can be mapped into the Level 0 computers to meet the Sequence of Operations.

2.02.2.4 Level 3/3A BAS devices need not support BACnetEngineeringUnits required in the Work providing the data can be mapped into the Level 0 computers to meet the Sequence of Operations.

2.02.3 BACnet features may be tested per the provisions of the network test throughput described elsewhere in this Specification.

2.02.3.1 The Owner reserves the right to test the network performance using a network protocol "sniffer". The Contractor shall co-operate with the Owner by providing password access to the network, a physical connection and the time of qualified personnel to review the results.

2.02.4 Provide the following BACnet features and services:

2.02.4.1 The Contractor's BAS equipment shall support BACnet over IP as defined in Annex J of the BACnet standard.

2.02.4.2 A time master shall be provided. The format of the time synchronization messages shall be to local time. UTC support is not necessary. This function may be done in a Level 0 device.

2.02.4.3 Use the appropriate character set to comply with the Working Language requirements of the Specification.

2.02.4.4 Level 0 computers and devices shall support all sixteen (16) command priorities per Table 2.

2.02.4.4.1 Structure the command priorities as shown in Table 2 below:

TABLE 2 : STANDARD COMMAND PRIORITIES

Priority Level	Application	Priority Level	Application
1	Manual-Life Safety	9	Temperature Override
2	Automatic-Life Safety	10	Available
3	Available	11	Electrical Demand Limiting
4	Available	12	Manual Occupancy Override by Occupant
5	Critical Equipment Control	13	Occupancy sensor control
6	Minimum ON/OFF	14	Night winter setback, Night summer set up

Priority Level	Application	Priority Level	Application
7	Available	15	Free cooling/purge
8	Manual Operator	16	Optimum start-stop

2.02.4.4.2 Support the following command priorities:

2.02.4.4.2.1 Level 1/1A BAS devices containing commandable object properties shall accept ALL sixteen (16) command priorities. Priority 6 is prohibited for any use other than minimum on/off time. It's use is restricted to binary outputs.

2.02.4.4.2.2 Level 0 and 1/1A devices that act as clients that can initiate writes to these properties shall support the use of ANY priority including priority 6.

2.02.4.4.2.3 Level 2/2A devices shall support priorities 8 and 10 at minimum.

2.02.4.4.2.4 Level 3/3A devices shall support priorities 8 and 10 at minimum.

2.02.4.4.2.5 All hardware outputs that are writable shall be commandable. All setpoints called up in the Sequence of Operations shall be commandable.

2.02.4.4.3 Where a BACnet device performs the functions of a gateway as defined in this Specification, support the Priority_Array properties of objects to provide network visible command priorities. Safeties for starting and stopping fans, boilers and other equipment shall be provided in the Contractor's BAS programming language as a local matter.

3 - PRODUCTS

Not Used

4 - EXECUTION

Not Used

End of Section

25 15 11 INTEGRATED AUTOMATION - OPERATOR WORKSTATION SOFTWARE

1 - GENERAL

Not Used

2 - PRODUCTS

2.01 Level 0 Front End Software - General Requirements

2.01.1 This Contractor shall provide the necessary NAE 55 devices to integrate all the Equipment Suppliers' Modbus Devices to the BACnet Interface Device together. Provide 200 spare objects over the expected 4800 object count.

2.01.2 There is no requirement to map these points to the existing ADX server as graphics will be done by ALC Chicago.

3 - EXECUTION

Not Used

End of Section

25 20 26.28.17 INTEGRATED AUTOMATION – BACNET INTERFACE DEVICE (GATEWAYS/NATIVE BACNET DEVICES) –MOULDED CASE CIRCUIT BREAKERS (ALL TYPES)

1 - GENERAL

1.01 Controls Coordination Meeting

1.01.1 This Contractor shall meet with all other Contractors (and/or Manufacturer's representative) who are supplying equipment to coordinate Work for this BACnet Interface Device.

1.01.2 The Controls Contractor shall meet with all Contractors (and/or supplier's representatives) who are supplying equipment with the control options as described above, that are to be integrated with the BACnet Internetwork, to coordinate details of the integration.

1.01.3 The Owner or his designated representative shall be present at this meeting.

1.01.4 Each Contractor and/or supplier providing Modbus Device(s) in this section shall provide the Owner and all other effected Contractors, with details of the proposed interface, including:

1.01.4.1 PICS for BACnet equipment detailed the BACnet BIBBs, BACnet Object Types and BACnet services supported.

1.01.4.2 If a gateway provide details on the proprietary protocol used in the supplier's equipment and the BACnet protocol to which the proprietary points are being mapped.

1.01.4.3 Hardware and software object list using the object list in this section as a guide. This would include object instances for BACnet, register mapping numbers for Modbus, SNVTs for LonMark or other identifiers.

1.01.4.4 Networking requirements including any network address range restrictions, bus communication speeds and any required network accessories.

1.01.4.5 Communications and power wiring requirements for the gateway and ancillary equipment to be terminated into the BACnet Interface Device to the Equipment Supplier's Modbus Device (valves, dampers, sensors, etc.).

1.01.4.6 Equipment installation and mounting requirements if the device is not integral to the supplier's equipment.

1.01.4.7 AutoCAD files to be used to create the BAS graphics.

1.01.4.8 The purpose of this meeting shall be to insure there are no unresolved issues regarding the integration of these products into the BAS Device Network.

1.01.5 Once this information is reviewed and approved, provide a formal submittal via the Shop Drawing process.

1.01.6 Submittals for these products shall not be approved prior to the completion of this meeting.

1.01.7 If the equipment supplier is providing a BACnet gateway device from an OEM supplier, both suppliers shall jointly warrant in writing that the gateway can successfully parse the proprietary protocol used by the packaged controls that come with the equipment.

1.01.8 The BACnet Interface Device to the Equipment Supplier's Modbus Deviceshall permit ALC Chicago to plot the BACnet objects into a graphic his non-UL Front End. This Contractor shall be able to monitor alarms and events and will be able to have control over objects as permitted by the BACnet Interface Device(s).

1.02 Shop Drawings

1.02.1 Provide product data sheets illustrating the equipment packaged controls interface(s) to be integrated with the BAS device network in the Work per the list above.

1.03 BACnet Interface Device Type

1.03.1 This BACnet Interface Device to the Equipment Supplier's Modbus Deviceshall be provided as:

1.03.1.1 <u>Single On-board BACnet Interface Device Type</u>:

1.03.1.1.1 This device is a single onboard BACnet interface device. Controls Contractor is responsible for providing and installing this device. Electrical is responsible for providing power to this device is power is not available via the single point of connection. Division 25 is responsible for networking this device.

1.03.1.1.1.1 Division 26 or Equipment Supplier will provide a Modbus to BACnet/IP gateway to network all Moulded Case Circuit Breakers (Trip Units) as Modbus slaves to a single BACnet/IP device.

This is not considered a Plant Controller BACnet Interface Device as there is no supervisory control over each unit.

1.03.1.1.2 The demarcation of Work responsibilities between Division 25 and other Divisions for this device shall be as outlined in the Responsibility Matrix.

1.04 Work By Others for this BACnet Interface Device

1.04.1 References to Division 23 shall be interpreted to mean Divisions 21, 22 and 23 or the Mechanical Subcontractor.

1.04.2 References to Division 26 shall be interpreted to mean Divisions 26, 27, 28 and 33 or the Electrical Subcontractor.

1.04.3 References to other MasterFormat 2004 Divisions shall be interpreted to mean the Subcontractor responsible for supplying and installing the equipment for this Division.

2 - PRODUCTS

2.01 General

2.01.1 Contractor (and/or Manufacturer's representative) equipment that comes with a Modbus Device, is responsible for the following:

2.01.1.1 Configuration, programming, start-up and testing of the BACnet Interface Device to the Equipment Supplier's Modbus Deviceto comply with this Section.

2.01.1.2 Working with this Contractor to commission the BACnet Interface Device to the Equipment Supplier's Modbus Deviceonce it is connected the Intranet at the Place of the Work.

2.01.1.3 Providing alarming details to the Controls Contractor, who is responsible for the alarms that are represented as AV and BV objects by the equipment interface.

2.01.1.4 Providing trending details to the Controls Contractor, who is responsible for the trends that are represented as AV and BV objects by the equipment interface.

2.02 BACnet Interface Device to the Equipment Supplier's Modbus DeviceGeneral Requirements

2.02.1 This Contractor shall shall provide a BACnet/IP BACnet Interface Device complete with an Annex J router to support BACnet/IP to act as a client and/or server for all BACnet information from this system to the BAS System.

2.02.2 The device shall support use of a static IP address for remote access through the Owner's firewall. Provision of remote access is not included in the Work.

2.02.3 The device shall have an open Ethernet port for connection to the network infrastructure (network connection to panel by the Owner). Co-ordinate network configuration requirements with the IT department through the Owner.

2.02.4 The Modbus Device shall be a product that is manufactured directly by the equipment supplier or may be an OEM product that is supported by the equipment supplier.

2.02.4.1 If the Modbus Device supplier is providing a device from an OEM supplier, both suppliers shall jointly warrant in writing that the gateway can successfully parse the equipment protocol. Provide this information as a Shop Drawing.

2.02.5 It is assumed that this device is not a native BACnet Interface Device.

2.02.6 BACnet/PTP devices used as gateways are not allowed in the Work without the written permission of the Owner.

2.02.6.1 The following BACnet Interface Devices to the Equipment Suppliers' Modbus Devices may be provided as BACnet/PTP:

2.02.6.1.1 NONE.

2.02.7 The BACnet Interface Device to the Equipment Supplier's Modbus Device shall support the following BACnet Interoperability Building Blocks (BIBBs):

2.02.7.1 Data Sharing - ReadProperty - B (DS-RP-B)
2.02.7.2 Data Sharing - ReadPropertyMultiple - B (DS-RPM-B)
2.02.7.3 Data Sharing - WriteProperty - B (DS-WP-B)
2.02.7.4 Data Sharing - WritePropertyMultiple - B (DS-WPM-B)
2.02.7.5 Alarm and Event - Notification Internal - B (AE-N-I-B)

2.02.7.6 Alarm and Event - ACK - B (AE-ACK-B)
2.02.7.7 Alarm and Event - Information - B (AE-INFO-B)
2.02.7.8 Device Management - Dynamic Device Binding - B (DM-DDB-B)
2.02.7.9 Device Management - Dynamic Object Binding - B (DM-DOB-B)
2.02.7.10 Device Management - DeviceCommunicationControl - B (DM-DCC-B)
2.02.7.11 Device Management - TimeSynchronization - B (DM-TS-B)
2.02.7.12 Device Management - UTCTimeSynchronization - B (DM-UTC-B)
2.02.7.13 Device Management - ReinitializeDevice - B (DM-RD-B)
2.02.7.14 Device Management - Restart - B (DM-R-B)

2.02.8 All BACnet Interface Devices to the Equipment Suppliers' Modbus Devices shall utilize the BACnet standard profile fault codes enumerated for the applicable device. The fault code values between zero and two fifty five (0 and 255) are reserved for BACnet standard fault codes and all values above two fifty five (255) are open to Manufacturer value added codes.

2.02.9 The BACnet Interface Device to the Equipment Supplier's Modbus Deviceshall support the following Object types:

2.02.9.1 Analog Input
2.02.9.2 Analog Output
2.02.9.3 Analog Value
2.02.9.4 Binary Input
2.02.9.5 Binary Output
2.02.9.6 Binary Value
2.02.9.7 Device Object
2.02.9.8 Multi-state Input
2.02.9.9 Multi-state Output
2.02.9.10 Multi-state Value

2.02.10 The BACnet Interface Device to the Equipment Supplier's Modbus Deviceshall support the required optional properties to comply with the Specification requirements and Control Sequences.

2.03 Moulded Case Circuit Breaker (Trip Unit) BACnet Interface

2.03.1 The BACnet Interface Device to the Equipment Supplier's Modbus Deviceshall be represented externally as a BACnet/IP device on the Owner's network.

2.03.2 There shall be a Modbus Device for the Main Breaker and another Modbus Device for the Chiller Breaker

2.03.3 The following points shall be represented as BACnet objects on the Controls Contractor's BACnet/IP BACnet Interface Device. Provide the following points as a minimum:

BACnet Moulded Case Circuit Breaker (Trip Unit) Object list (Typical for each Unit)																
Object List	**Mapped Object List**	**Read/ Write**	**Object Type**	**Supply Device**	**Install Device**	**Power Device**	**Wire Device**	**Pgm Device**	**Alarmable**	**Alarm Limit**	**Alarm Type**	**Graphic**	**Trend**	**Com'd**	**Units**	**Description (acceptable value range)**
Vendor Name	LCB#-NNN-LVSwtg-MMM-VendorName	R	ASCII	ES	ES	ES	ES	ES			N					no-units
Model Name	LCB#-NNN-LVSwtg-MMM-ModelName	R	ASCII	ES	ES	ES	ES	ES			N					no-units
Display Name	LCB#-NNN-LVSwtg-MMM-DisplayName	R	ASCII	ES	ES	ES	ES	ES			N					no-units
Device Type	LCB#-NNN-LVSwtg-MMM-DeviceType	R	ASCII	ES	ES	ES	ES	ES			N					no-units
Field Replacement Unit	LCB#-NNN-LVSwtg-MMM-FldRepU	R	UINT16	ES	ES	ES	ES	ES			N					no-units
Status	LCB#-NNN-LVSwtg-MMM-Status	R	UINT17	ES	ES	ES	ES	ES			Y					no-units
Status Reason	LCB#-NNN-LVSwtg-MMM-StaReason	R	UINT18	ES	ES	ES	ES	ES			N					no-units
Event Count	LCB#-NNN-LVSwtg-MMM-EventCount	R	UINT19	ES	ES	ES	ES	ES			N					no-units
Status Secondary	LCB#-NNN-LVSwtg-MMM-StaSec	R	UINT20	ES	ES	ES	ES	ES			N					no-units
Secondary Status Code	LCB#-NNN-LVSwtg-MMM-SecStaCode	R	UINT21	ES	ES	ES	ES	ES			N					no-units
Vab	LCB#-NNN-LVSwtg-MMM-Vab	R	AV	ES	ES	ES	ES	ES			N				V	volts
Vbc	LCB#-NNN-LVSwtg-MMM-Vbc	R	AV	ES	ES	ES	ES	ES			N				V	volts
Vca	LCB#-NNN-LVSwtg-MMM-Vca	R	AV	ES	ES	ES	ES	ES			N				V	volts
Ia	LCB#-NNN-LVSwtg-MMM-Ia	R	AV	ES	ES	ES	ES	ES			N				A	amperes
Ib	LCB#-NNN-LVSwtg-MMM-Ib	R	AV	ES	ES	ES	ES	ES			N				A	amperes
Ic	LCB#-NNN-LVSwtg-	R	AV	ES	ES	ES	ES	ES			N				A	amperes

BACnet Moulded Case Circuit Breaker (Trip Unit) Object list (Typical for each Unit)																
Object List	**Mapped Object List**	**Read/ Write**	**Object Type**	**Supply Device**	**Install Device**	**Power Device**	**Wire Device**	**Pgm Device**	**Alarmable**	**Alarm Limit**	**Alarm Type**	**Graphic**	**Trend**	**Com'd**	**Units**	**Description (acceptable value range)**
	MMM-Ic															
Ig	LCB#-NNN-LVSwtg-MMM-Ig	R	AV	ES	ES	ES	ES	ES			N				A	amperes
In	LCB#-NNN-LVSwtg-MMM-In	R	AV	ES	ES	ES	ES	ES			N				A	amperes
Demand Ia Peak	LCB#-NNN-LVSwtg-MMM-DmdIaPeak	R	AV	ES	ES	ES	ES	ES			N				A	amperes
Demand Ib Peak	LCB#-NNN-LVSwtg-MMM-DmdIbPeak	R	AV	ES	ES	ES	ES	ES			N				A	amperes
Demand Ic Peak	LCB#-NNN-LVSwtg-MMM-DmdIcPeak	R	AV	ES	ES	ES	ES	ES			N				A	amperes
Demand Ia	LCB#-NNN-LVSwtg-MMM-DemandIa	R	AV	ES	ES	ES	ES	ES			N				A	amperes
Demand Ib	LCB#-NNN-LVSwtg-MMM-DemandIb	R	AV	ES	ES	ES	ES	ES			N				A	amperes
Demand Ic	LCB#-NNN-LVSwtg-MMM-DemandIc	R	AV	ES	ES	ES	ES	ES			N				A	amperes
Real Power	LCB#-NNN-LVSwtg-MMM-RealPwr	R	AV	ES	ES	ES	ES	ES			N				W	watts
Apparent Power	LCB#-NNN-LVSwtg-MMM-AptPwr	R	AV	ES	ES	ES	ES	ES			N				VA	volt-amperes
Reactive Power	LCB#-NNN-LVSwtg-MMM-ReActPwr	R	AV	ES	ES	ES	ES	ES			N				VA	volt-amperes
PF Displacement	LCB#-NNN-LVSwtg-MMM-PFDisp	R	AV	ES	ES	ES	ES	ES			N				PF	power-factor
PF Apparent	LCB#-NNN-LVSwtg-MMM-PFApparent	R	AV	ES	ES	ES	ES	ES			N				PF	power-factor
Forward Real Energy	LCB#-NNN-LVSwtg-MMM-FwdRlEne	R	AV	ES	ES	ES	ES	ES			N				Wh	watt-hours

BACnet Moulded Case Circuit Breaker (Trip Unit) Object list (Typical for each Unit)																
Object List	**Mapped Object List**	**Read/ Write**	**Object Type**	**Supply Device**	**Install Device**	**Power Device**	**Wire Device**	**Pgm Device**	**Alarmable**	**Alarm Limit**	**Alarm Type**	**Graphic**	**Trend**	**Com'd**	**Units**	**Description (acceptable value range)**
Reverse Real Energy	LCB#-NNN-LVSwtg-MMM-RvsRlEne	R	AV	ES	ES	ES	ES	ES			N				Wh	watt-hours
Apparent Energy	LCB#-NNN-LVSwtg-MMM-AptEne	R	AV	ES	ES	ES	ES	ES			N				VAh	volt-ampere-hours
Crest Factor Ia	LCB#-NNN-LVSwtg-MMM-CrtFctIa	R	AV	ES	ES	ES	ES	ES			N					no-units
Crest Factor Ib	LCB#-NNN-LVSwtg-MMM-CrtFctIb	R	AV	ES	ES	ES	ES	ES			N					no-units
Crest Factor Ic	LCB#-NNN-LVSwtg-MMM-CrtFctIc	R	AV	ES	ES	ES	ES	ES			N					no-units
Crest Factor Ig	LCB#-NNN-LVSwtg-MMM-CrtFctIg	R	AV	ES	ES	ES	ES	ES			N					no-units
Crest Factor In	LCB#-NNN-LVSwtg-MMM-CrtFctIn	R	AV	ES	ES	ES	ES	ES			N					no-units
Percent THD Ia	LCB#-NNN-LVSwtg-MMM-PctTHDIa	R	AV	ES	ES	ES	ES	ES			N				%	percent
Percent THD Ib	LCB#-NNN-LVSwtg-MMM-PctTHDIb	R	AV	ES	ES	ES	ES	ES			N				%	percent
Percent THD Ic	LCB#-NNN-LVSwtg-MMM-PctTHDIc	R	AV	ES	ES	ES	ES	ES			N				%	percent
Percent THD In	LCB#-NNN-LVSwtg-MMM-PctTHDIn	R	AV	ES	ES	ES	ES	ES			N				%	percent
Percent THD Ig	LCB#-NNN-LVSwtg-MMM-PctTHDIg	R	AV	ES	ES	ES	ES	ES			N				%	percent
Maximum Temperature	LCB#-NNN-LVSwtg-MMM-MaxTmp	R	AV	ES	ES	ES	ES	ES			N				°C	degrees-Celsius
IST SDT Faults	LCB#-NNN-LVSwtg-MMM-ISTSDTFau	R	UINT16	ES	ES	ES	ES	ES			N					no-units

BACnet Moulded Case Circuit Breaker (Trip Unit) Object list (Typical for each Unit)																
Object List	**Mapped Object List**	**Read/ Write**	**Object Type**	**Supply Device**	**Install Device**	**Power Device**	**Wire Device**	**Pgm Device**	**Alarmable**	**Alarm Limit**	**Alarm Type**	**Graphic**	**Trend**	**Com'd**	**Units**	**Description (acceptable value range)**
LDT GFT Faults	LCB#-NNN-LVSwtg-MMM-LDTGFTFau	R	UINT16	ES	ES	ES	ES	ES			N					no-units
Phase Instantaneous Overcurrent	LCB#-NNN-LVSwtg-MMM-PhaInttOvc	R	UINT16	ES	ES	ES	ES	ES			N					no-units
Phase Inverse Time Overcurrent	LCB#-NNN-LVSwtg-MMM-PhaIvrTOvc	R	UINT16	ES	ES	ES	ES	ES			N					no-units
Neutral Inverse Time Overcurrent	LCB#-NNN-LVSwtg-MMM-NeuIvrTOvc	R	UINT16	ES	ES	ES	ES	ES			N					no-units
Over Voltage	LCB#-NNN-LVSwtg-MMM-OvrVtg	R	UINT16	ES	ES	ES	ES	ES			N					no-units
Under Voltage	LCB#-NNN-LVSwtg-MMM-UdrVtg	R	UINT16	ES	ES	ES	ES	ES			N					no-units
Under Frequency	LCB#-NNN-LVSwtg-MMM-UdrFrq	R	UINT16	ES	ES	ES	ES	ES			N					no-units
Over Frequency	LCB#-NNN-LVSwtg-MMM-OvrFrq	R	UINT16	ES	ES	ES	ES	ES			N					no-units
Amperes Out of Balance	LCB#-NNN-LVSwtg-MMM-AmpOutBal	R	UINT16	ES	ES	ES	ES	ES			N					no-units
Voltage Out of Balance	LCB#-NNN-LVSwtg-MMM-VtgOutBal	R	UINT16	ES	ES	ES	ES	ES			N					no-units
Low Power Factor	LCB#-NNN-LVSwtg-MMM-LoPwrFct	R	UINT16	ES	ES	ES	ES	ES			N					no-units
Power Demand	LCB#-NNN-LVSwtg-MMM-PwrDmd	R	UINT16	ES	ES	ES	ES	ES			N					no-units
VA Demand	LCB#-NNN-LVSwtg-MMM-VADmd	R	UINT16	ES	ES	ES	ES	ES			N					no-units
Total Harmonic Distortion	LCB#-NNN-LVSwtg-MMM-TotHrmDtt	R	UINT16	ES	ES	ES	ES	ES			N					no-units
Operation Counts	LCB#-NNN-LVSwtg-MMM-OpCounts	R	UINT16	ES	ES	ES	ES	ES			N					no-units

BACnet Moulded Case Circuit Breaker (Trip Unit) Object list (Typical for each Unit)																
Object List	**Mapped Object List**	**Read/ Write**	**Object Type**	**Supply Device**	**Install Device**	**Power Device**	**Wire Device**	**Pgm Device**	**Alarmable**	**Alarm Limit**	**Alarm Type**	**Graphic**	**Trend**	**Com'd**	**Units**	**Description (acceptable value range)**
Communications	LCB#-NNN-LVSwtg-MMM-Communication	R	UINT16	ES	ES	ES	ES	ES			N					no-units
RAM Error	LCB#-NNN-LVSwtg-MMM-RAMError	R	UINT16	ES	ES	ES	ES	ES			N					no-units
EEROM Error	LCB#-NNN-LVSwtg-MMM-EEROMError	R	UINT16	ES	ES	ES	ES	ES			N					no-units
Watchdog	LCB#-NNN-LVSwtg-MMM-Watchdog	R	UINT16	ES	ES	ES	ES	ES			N					no-units
Long Delay	LCB#-NNN-LVSwtg-MMM-LongDly	R	UINT16	ES	ES	ES	ES	ES			N					no-units
Short Delay	LCB#-NNN-LVSwtg-MMM-ShortDly	R	UINT16	ES	ES	ES	ES	ES			N					no-units
Discriminator	LCB#-NNN-LVSwtg-MMM-Discriminator	R	UINT16	ES	ES	ES	ES	ES			N					no-units
Bad/Missing Rating Plug	LCB#-NNN-LVSwtg-MMM-BadMisRPlug	R	UINT16	ES	ES	ES	ES	ES			N					no-units
Reverse Power	LCB#-NNN-LVSwtg-MMM-RvsPwr	R	UINT16	ES	ES	ES	ES	ES			N					no-units
Override	LCB#-NNN-LVSwtg-MMM-Override	R	UINT16	ES	ES	ES	ES	ES			N					no-units
Reverse Phase	LCB#-NNN-LVSwtg-MMM-RvsPha	R	UINT16	ES	ES	ES	ES	ES			N					no-units
Phase Rotation	LCB#-NNN-LVSwtg-MMM-PhaRot	R	UINT16	ES	ES	ES	ES	ES			N					no-units
Phase Current Loss	LCB#-NNN-LVSwtg-MMM-PhaCurLos	R	UINT16	ES	ES	ES	ES	ES			N					no-units
Alarm Active	LCB#-NNN-LVSwtg-MMM-AlmAct	R	UINT16	ES	ES	ES	ES	ES			N					no-units
Bad Frame	LCB#-NNN-LVSwtg-MMM-	R	UINT16	ES	ES	ES	ES	ES			N					no-units

BACnet Moulded Case Circuit Breaker (Trip Unit) Object list (Typical for each Unit)																
Object List	**Mapped Object List**	**Read/ Write**	**Object Type**	**Supply Device**	**Install Device**	**Power Device**	**Wire Device**	**Pgm Device**	**Alarmable**	**Alarm Limit**	**Alarm Type**	**Graphic**	**Trend**	**Com'd**	**Units**	**Description (acceptable value range)**
	BadFrame															
High Load	LCB#-NNN-LVSwtg-MMM-HighLoad	R	UINT16	ES	ES	ES	ES	ES			N					no-units
Lockout	LCB#-NNN-LVSwtg-MMM-Lockout	R	UINT16	ES	ES	ES	ES	ES			N					no-units
Making Current Release	LCB#-NNN-LVSwtg-MMM-MkCurRls	R	UINT16	ES	ES	ES	ES	ES			N					no-units
High Instantaneous	LCB#-NNN-LVSwtg-MMM-HiIntt	R	UINT16	ES	ES	ES	ES	ES			N					no-units
Setpoint Error	LCB#-NNN-LVSwtg-MMM-SetErr	R	UINT16	ES	ES	ES	ES	ES			N					no-units
Over Temperature	LCB#-NNN-LVSwtg-MMM-OvrTmp	R	UINT16	ES	ES	ES	ES	ES			N					no-units
Accessory Bus	LCB#-NNN-LVSwtg-MMM-AcsBus	R	UINT16	ES	ES	ES	ES	ES			N					no-units
Neutral	LCB#-NNN-LVSwtg-MMM-Neutral	R	UINT16	ES	ES	ES	ES	ES			N					no-units
Historical Data	LCB#-NNN-LVSwtg-MMM-HstData	R	UINT16	ES	ES	ES	ES	ES			N					no-units
Ground Fault	LCB#-NNN-LVSwtg-MMM-GndFau	R	UINT16	ES	ES	ES	ES	ES			N					no-units
Earth Fault	LCB#-NNN-LVSwtg-MMM-EarthFau	R	UINT16	ES	ES	ES	ES	ES			N					no-units
Earth Fault	LCB#-NNN-LVSwtg-MMM-EarthFau	R	UINT16	ES	ES	ES	ES	ES			N					no-units
Trip Blocked	LCB#-NNN-LVSwtg-MMM-TripBlk	R	UINT16	ES	ES	ES	ES	ES			N					no-units
Frequency Out of Bounds	LCB#-NNN-LVSwtg-MMM-FrqOutBou	R	UINT16	ES	ES	ES	ES	ES			N					no-units
Check Aux Switch	LCB#-NNN-LVSwtg-MMM-	R	UINT16	ES	ES	ES	ES	ES			N					no-units

BACnet Moulded Case Circuit Breaker (Trip Unit) Object list (Typical for each Unit)																
Object List	**Mapped Object List**	**Read/ Write**	**Object Type**	**Supply Device**	**Install Device**	**Power Device**	**Wire Device**	**Pgm Device**	**Alarmable**	**Alarm Limit**	**Alarm Type**	**Graphic**	**Trend**	**Com'd**	**Units**	**Description (acceptable value range)**
	ChkAuxSwt															
Receive Date and Time	LCB#-NNN-LVSwtg-MMM-RcvTimeDate	R	Time	E S	E S	E S	E S	E S			N					no-units
Reset Alarm	LCB#-NNN-LVSwtg-MMM-RstAlm	W	BV	E S	E S	E S	E S	E S			N					no-units
Reset Trip	LCB#-NNN-LVSwtg-MMM-RstTrip	W	BV	E S	E S	E S	E S	E S			N					no-units
Reset Peak Demand Watts	LCB#-NNN-LVSwtg-MMM-RstPkDmdWt	W	BV	E S	E S	E S	E S	E S			N					no-units
Reset Peak Demand Current	LCB#-NNN-LVSwtg-MMM-RstPkDmdCur	W	BV	E S	E S	E S	E S	E S			N					no-units

3 - EXECUTION

3.01 BACnet Interface Device to the Equipment Supplier's Modbus DeviceInstallation and Commissioning: BACnet/IP requirements

3.01.1 The following BACnet Interface Devices to the Equipment Suppliers' Modbus Devices described in this Section shall reside on the Owner's network as a BACnet/IP device.

3.01.1.1 Moulded Case Circuit Breaker Network.

3.01.2 A BACnet/IP device provided in the Work shall meet the following requirements:

3.01.2.1 BACnet/IP device shall include an Annex J B/IP router to support BACnet/IP to act as a client and/or server for all BACnet information from the supplied equipment to the BAS Device Network, which is considered a "directly connected network".

3.01.2.2 The BAS Device Network is treated as a "remote network" that is reachable by communicating using BACnet/IP with a router supplied by others that serves the remote network.

3.01.2.3 The BACnet/IP device shall come c/w a BBMD that will be configured to traverse IP subnets.

3.01.2.4 The interface shall have an open Ethernet RJ-45 port for connection to the BAS system device network infrastructure using communications cabling that complies with the TIA/EIA 568-B standard.

3.01.2.5 The interface shall operate at a minimum of 10 Mbps, full duplex.

3.01.3 The Owner will arrange for the following:

3.01.3.1 The IT department will provide a static IP address for the BACnet/IP BACnet Interface Device.

3.01.3.2 The IT department will assist with the commissioning of the network connection with this Contractor and the Modbus Device supplier. The Owner and designated personnel are only responsible for providing the termination to the building switch in the Comms room and for ensuring that the IP connection to the Intranet is operational.

3.01.3.3 The Owner will provide the passwords and access levels required for the Work.

3.01.4 Controls Contractor is the supplier of the BACnet Interface Device to the Equipment Supplier's Modbus Deviceand this Contractor shall provide the following:

3.01.4.1 Configuration of the device with the assigned IP address.
3.01.4.2 Connection of the network cable to the BACnet Interface Device.
3.01.4.3 Commissioning the final network connection to the Owner's network.
3.01.4.4 Providing details of the required alarms, schedules and trends as outlined in the Sequence of Operation.
3.01.4.5 Review of the graphics created by this Contractor.
3.01.4.6 Creation and assignment of passwords and access levels within the device.
3.01.4.7 Joint commissioning of the BACnet Interface Device to the Equipment Supplier's Modbus Devicewith this Contractor to the satisfaction of the Owner or the designated Commissioning Authority. The Work includes the following:

3.01.4.7.1 Use the commissioning forms and procedures outlined in this Division.
3.01.4.7.2 All network visible objects shall be commissioned.
3.01.4.7.3 The process shall be overseen by Controls Engineer.
3.01.4.7.4 Allow 8 hours of on-site time for this Work.
3.01.4.7.5 The following special provisions apply to the commissioning Work.

3.01.4.7.5.1 NONE.

3.01.5 This Contractor shall provide the following:

3.01.5.1 A schedule as to when the networking requirements need to be completed. See the Division 25 section for this information to be provided as a Shop Drawing.
3.01.5.2 Joint commissioning the final network connection to the Owner's Intranet.
3.01.5.3 Creating of the required alarms, schedules and trends as outlined in the Sequence of Operation. The following minimums apply to this Section:

3.01.5.3.1 A minimum of 10 alarms or an alarm for each equipment fault. Two of which are considered critical.
3.01.5.3.2 A minimum of 1 schedule.
3.01.5.3.3 A minimum of 10 Extended Trends.

3.01.5.4 Assistance to ALC Chicago for the creation of the Front End graphics based on information from the supplier of the BACnet Interface Device. The following minimums apply to this Section:

3.01.5.4.1 The equipment supplier shall provide material so ALC Chicago can create a graphic that matches the device. Emulate the functionality of the supplied equipment local interface (e.g., annunciator panel, LCD display, GUI interface) at the BAS system Front End.
3.01.5.4.2 Provide one master alarm graphic showing the Critical Alarms and all equipment fault alarms.
3.01.5.4.3 Where a table of Object Types is not provided in this section, allow for a minimum of 500 objects to be mapped from the BACnet Interface Device.

3.01.5.5 Documentation of passwords and access levels within the device using information provided by the Owner.
3.01.5.6 Commission the BACnet Interface Device to the Equipment Supplier's Modbus Devicewith the equipment supplier, to the satisfaction of the Owner or the designated Commissioning Authority. The Work includes the following:

3.01.5.6.1 Use the commissioning forms and procedures outlined in this Division.
3.01.5.6.2 The process shall be overseen by Controls Engineer.
3.01.5.6.3 Provide confirmation via the Shop Drawing process before the Work starts. Any variations shall be approved via the Shop Drawing process.
3.01.5.6.4 Complete commissioning of all network visible object types according to the procedures outlined in Section 25 08 00, using the relevant Commissioning Forms for each BACnet Object Types.
3.01.5.6.5 Verify all network visible BACnet Object Types correctly display the same information on the Front End as is being displayed on the equipment local interface. All network visible objects shall be commissioned.
3.01.5.6.6 Parse all equipment packaged controls alarms, trends and schedules that are represented as AV and BV BACnet Object Types by the equipment packaged controls interface.
3.01.5.6.7 Allow 8 hours of on-site time for this Work.

3.01.5.6.8 The following special provisions apply to the commissioning Work.

3.01.5.6.8.1 NONE

End of Section

25 20 26.32 INTEGRATED AUTOMATION – BACNET INTERFACE DEVICE (GATEWAYS/NATIVE BACNET DEVICES) – PACKAGED GENERATOR ASSEMBLIES (ALL TYPES)

1 - GENERAL

1.01 Controls Coordination Meeting

1.01.1 This Contractor shall meet with all other Contractors (and/or Manufacturer's representative) who are supplying equipment to coordinate Work for this BACnet Interface Device.

1.01.2 The Controls Contractor shall meet with all Contractors (and/or supplier's representatives) who are supplying equipment with the control options as described above, that are to be integrated with the BACnet Internetwork, to coordinate details of the integration.

1.01.3 The Owner or his designated representative shall be present at this meeting.

1.01.4 Each Contractor and/or supplier providing Modbus Device(s) in this section shall provide the Owner and all other effected Contractors, with details of the proposed interface, including:

1.01.4.1 PICS for BACnet equipment detailed the BACnet BIBBs, BACnet Object Types and BACnet services supported.

1.01.4.2 If a gateway provide details on the proprietary protocol used in the supplier's equipment and the BACnet protocol to which the proprietary points are being mapped.

1.01.4.3 Hardware and software object list using the object list in this section as a guide. This would include object instances for BACnet, register mapping numbers for Modbus, SNVTs for LonMark or other identifiers.

1.01.4.4 Networking requirements including any network address range restrictions, bus communication speeds and any required network accessories.

1.01.4.5 Communications and power wiring requirements for the gateway and ancillary equipment to be terminated into the BACnet Interface Device to the Equipment Supplier's Modbus Device(valves, dampers, sensors, etc.).

1.01.4.6 Equipment installation and mounting requirements if the device is not integral to the supplier's equipment.

1.01.4.7 AutoCAD files to be used to create the BAS graphics.

1.01.4.8 The purpose of this meeting shall be to insure there are no unresolved issues regarding the integration of these products into the BAS Device Network.

1.01.5 Once this information is reviewed and approved, provide a formal submittal via the Shop Drawing process.

1.01.6 Submittals for these products shall not be approved prior to the completion of this meeting.

1.01.7 If the equipment supplier is providing a BACnet gateway device from an OEM supplier, both suppliers shall jointly warrant in writing that the gateway can successfully parse the proprietary protocol used by the packaged controls that come with the equipment.

1.01.8 The BACnet Interface Device to the Equipment Supplier's Modbus Deviceshall permit ALC Chicago to plot the BACnet objects into a graphic his non-UL Front End. This Contractor shall be able to monitor alarms and events and will be able to have control over objects as permitted by the BACnet Interface Device(s).

1.02 Shop Drawings

1.02.1 Provide product data sheets illustrating the equipment packaged controls interface(s) to be integrated with the BAS device network in the Work per the list above.

1.03 BACnet Interface Device Type

1.03.1 This BACnet Interface Device to the Equipment Supplier's Modbus Deviceshall be provided as:

1.03.1.1 <u>Single On-board BACnet Interface Device Type</u>:

1.03.1.1.1 This device is a single onboard BACnet Interface Device. Controls Contractor is responsible for providing and installing this device. Electrical is responsible for providing power to this device is power is not available via the single point of connection. Division 25 is responsible for networking this device.

1.03.1.1.2 The demarcation of Work responsibilities between Division 25 and other Divisions for this device shall be as outlined in the Responsibility Matrix.

1.04 Work By Others for this BACnet Interface Device

1.04.1 References to Division 23 shall be interpreted to mean Divisions 21, 22 and 23 or the Mechanical Subcontractor.
1.04.2 References to Division 26 shall be interpreted to mean Divisions 26, 27, 28 and 33 or the Electrical Subcontractor.
1.04.3 References to Division 13, 41 or other MasterFormat 2004 Divisions shall be interpreted to mean the Subcontractor responsible for supplying and installing the equipment for this Division.

2 - PRODUCTS

2.01 General

2.01.1 Contractor (and/or Manufacturer's representative) equipment that comes with a Modbus Device, is responsible for the following:

2.01.1.1 Configuration, programming, start-up and testing of the BACnet Interface Device to the Equipment Supplier's Modbus Deviceto comply with this Section.
2.01.1.2 Working with this Contractor to commission the BACnet Interface Device to the Equipment Supplier's Modbus Deviceonce it is connected the Intranet at the Place of the Work.
2.01.1.3 Providing alarming details to the Controls Contractor, who is responsible for the alarms that are represented as AV and BV objects by the equipment interface.
2.01.1.4 Providing trending details to the Controls Contractor, who is responsible for the trends that are represented as AV and BV objects by the equipment interface.

2.02 BACnet Interface Device to the Equipment Supplier's Modbus DeviceGeneral Requirements

2.02.1 This Contractor shall provide a BACnet/IP BACnet Interface Device complete with an Annex J router to support BACnet/IP to act as a client and/or server for all BACnet information from this system to the BAS System.
2.02.2 The device shall support use of a static IP address for remote access through the Owner's firewall. Provision of remote access is not included in the Work.
2.02.3 The device shall have an open Ethernet port for connection to the network infrastructure (network connection to panel by the Owner). Co-ordinate network configuration requirements with the IT department through the Owner.
2.02.4 The Modbus Device shall be a product that is manufactured directly by the equipment supplier or may be an OEM product that is supported by the equipment supplier.

2.02.4.1 If the Modbus Device supplier is providing a device from an OEM supplier, both suppliers shall jointly warrant in writing that the gateway can successfully parse the equipment protocol. Provide this information as a Shop Drawing.

2.02.5 It is assumed that this device is not a native BACnet Interface Device.
2.02.6 BACnet/PTP devices used as gateways are not allowed in the Work without the written permission of the Owner.

2.02.6.1 The following BACnet Interface Devices to the Equipment Suppliers' Modbus Devices may be provided as BACnet/PTP:

2.02.6.1.1 NONE.

2.02.7 The BACnet Interface Device to the Equipment Supplier's Modbus Device shall support the following BACnet Interoperability Building Blocks (BIBBs):

2.02.7.1 Data Sharing - ReadProperty - B (DS-RP-B)
2.02.7.2 Data Sharing - ReadPropertyMultiple - B (DS-RPM-B)
2.02.7.3 Data Sharing - WriteProperty - B (DS-WP-B)
2.02.7.4 Data Sharing - WritePropertyMultiple - B (DS-WPM-B)
2.02.7.5 Alarm and Event - Notification Internal - B (AE-N-I-B)
2.02.7.6 Alarm and Event - ACK - B (AE-ACK-B)
2.02.7.7 Alarm and Event - Information - B (AE-INFO-B)
2.02.7.8 Device Management - Dynamic Device Binding - B (DM-DDB-B)
2.02.7.9 Device Management - Dynamic Object Binding - B (DM-DOB-B)
2.02.7.10 Device Management - DeviceCommunicationControl - B (DM-DCC-B)
2.02.7.11 Device Management - TimeSynchronization - B (DM-TS-B)

2.02.7.12 Device Management - UTCTimeSynchronization - B (DM-UTC-B)
2.02.7.13 Device Management - ReinitializeDevice - B (DM-RD-B)
2.02.7.14 Device Management - Restart - B (DM-R-B)

2.02.8 All BACnet Interface Devices to the Equipment Suppliers' Modbus Devices shall utilize the BACnet standard profile fault codes enumerated for the applicable device. The fault code values between zero and two fifty five (0 and 255) are reserved for BACnet standard fault codes and all values above two fifty five (255) are open to Manufacturer value added codes.

2.02.9 The BACnet Interface Device to the Equipment Supplier's Modbus Deviceshall support the following Object types:

2.02.9.1 Analog Input
2.02.9.2 Analog Output
2.02.9.3 Analog Value
2.02.9.4 Binary Input
2.02.9.5 Binary Output
2.02.9.6 Binary Value
2.02.9.7 Device Object
2.02.9.8 Multi-state Input
2.02.9.9 Multi-state Output
2.02.9.10 Multi-state Value

2.02.10 The BACnet Interface Device to the Equipment Supplier's Modbus Deviceshall support the required optional properties to comply with the Specification requirements and Control Sequences.

2.03 Emergency Generator BACnet Interface

2.03.1 The BACnet Interface Device to the Equipment Supplier's Modbus Deviceshall be represented externally as a BACnet/IP device on the Owner's network.

2.03.2 The following points shall be represented as BACnet objects on the Controls Contractor's BACnet/IP BACnet Interface Device. Provide the following points as a minimum:

BACnet Generator Object list (Typical for each Unit)																
Object List	**Mapped Object List**	**Read/ Write**	**Object Type**	**Supply Device**	**Install Device**	**Power Device**	**Wire Device**	**Pgm Device**	**Alarmable**	**Alarm Limit**	**Alarm Type**	**Graphic**	**Trend**	**Com'd**	**Units**	**Description (acceptable value range)**
L1 -- L2 Voltage	LCB#-NNN-Gen-MMM-L1L2Vtg	R	AV	25	25	25	25	25	25	25	25	25	25	25	V	Volts AC
L2 -- L3 Voltage	LCB#-NNN-Gen-MMM-L2L3Vtg	R	AV	25	25	25	25	25	25	25	25	25	25	25	V	
L3 -- L1 Voltage	LCB#-NNN-Gen-MMM-L3L1Vtg	R	AV	25	25	25	25	25	25	25	25	25	25	25	V	
L1 -- L0 Voltage	LCB#-NNN-Gen-MMM-L1L0Vtg	R	AV	25	25	25	25	25	25	25	25	25	25	25	V	
L2 -- L0 Voltage	LCB#-NNN-Gen-MMM-L2L0Vtg	R	AV	25	25	25	25	25	25	25	25	25	25	25	V	
L3 -- L0 Voltage	LCB#-NNN-Gen-MMM-L3L0Vtg	R	AV	25	25	25	25	25	25	25	25	25	25	25	V	
L1 Current	LCB#-NNN-Gen-MMM-L1Current	R	AV	25	25	25	25	25	25	25	25	25	25	25	A	
L2 Current	LCB#-NNN-Gen-MMM-L2Current	R	AV	25	25	25	25	25	25	25	25	25	25	25	A	
L3 Current	LCB#-NNN-Gen-MMM-L3Current	R	AV	25	25	25	25	25	25	25	25	25	25	25	A	
Frequency	LCB#-NNN-Gen-MMM-Frequency	R	AV	25	25	25	25	25	25	25	25	25	25	25	Hz	

BACnet Generator Object list (Typical for each Unit)																
Object List	**Mapped Object List**	**Read/ Write**	**Object Type**	**Supply Device**	**Install Device**	**Power Device**	**Wire Device**	**Pgm Device**	**Alarmable**	**Alarm Limit**	**Alarm Type**	**Graphic**	**Trend**	**Com'd**	**Units**	**Description (acceptable value range)**
Total kW	LCB#-NNN-Gen-MMM-TotalKw	R	AV	25	25	25	25	25	25	25	25	25	25	25	kW	
Percent of Rated kW	LCB#-NNN-Gen-MMM-PctRKw	R	AV	25	25	25	25	25	25	25	25	25	25	25	%	
Total Power Factor	LCB#-NNN-Gen-MMM-TotPwrFct	R	AV	25	25	25	25	25	25	25	25	25	25	25	PF	
L1 kW	LCB#-NNN-Gen-MMM-L1Kw	R	AV	25	25	25	25	25	25	25	25	25	25	25	kW	
L1 Power Factor	LCB#-NNN-Gen-MMM-L1PwrFct	R	AV	25	25	25	25	25	25	25	25	25	25	25	PF	
L2 kW	LCB#-NNN-Gen-MMM-L2Kw	R	AV	25	25	25	25	25	25	25	25	25	25	25	kW	
L2 Power Factor	LCB#-NNN-Gen-MMM-L2PwrFct	R	AV	25	25	25	25	25	25	25	25	25	25	25	PF	
L3 kW	LCB#-NNN-Gen-MMM-L3Kw	R	AV	25	25	25	25	25	25	25	25	25	25	25	kW	
L3 Power Factor	LCB#-NNN-Gen-MMM-L3PwrFct	R	AV	25	25	25	25	25	25	25	25	25	25	25	PF	
Total kVAR	LCB#-NNN-Gen-MMM-TotalKVAR	R	AV	25	25	25	25	25	25	25	25	25	25	25	kvar	

BACnet Generator Object list (Typical for each Unit)																
Object List	**Mapped Object List**	**Read/ Write**	**Object Type**	**Supply Device**	**Install Device**	**Power Device**	**Wire Device**	**Pgm Device**	**Alarmable**	**Alarm Limit**	**Alarm Type**	**Graphic**	**Trend**	**Com'd**	**Units**	**Description (acceptable value range)**
L1 kVAR	LCB#-NNN-Gen-MMM-L1KVAR	R	AV	25	25	25	25	25	25	25	25	25	25	25	kvar	
L2 kVAR	LCB#-NNN-Gen-MMM-L2KVAR	R	AV	25	25	25	25	25	25	25	25	25	25	25	kvar	
L3 kVAR	LCB#-NNN-Gen-MMM-L3KVAR	R	AV	25	25	25	25	25	25	25	25	25	25	25	kvar	
Total kVA	LCB#-NNN-Gen-MMM-TotalKVA	R	AV	25	25	25	25	25	25	25	25	25	25	25	kVA	
L1 kVA	LCB#-NNN-Gen-MMM-L1KVA	R	AV	25	25	25	25	25	25	25	25	25	25	25	kVA	
L2 kVA	LCB#-NNN-Gen-MMM-L2KVA	R	AV	25	25	25	25	25	25	25	25	25	25	25	kVA	
L3 kVA	LCB#-NNN-Gen-MMM-L3KVA	R	AV	25	25	25	25	25	25	25	25	25	25	25	kVA	
Current Lead/Lag	LCB#-NNN-Gen-MMM-CurLeadLag	R		25	25	25	25	25	25	25	25	25	25	25		Bits 0--1 Total Current -- Leading = 10 Lagging = 01; Bits 2--3 L1 Current -- Leading = 10 Lagging = 01; Bits 4--5 L2 Current -- Leading = 10 Lagging = 01; Bits 6--7 L3 Current -- Leading = 10 Lagging = 01
Oil Pressure*	LCB#-NNN-Gen-MMM-OilPrs	R	AV	25	25	25	25	25	25	25	25	25	25	25	kPa	kPa/psi
Coolant Temperature*	LCB#-NNN-Gen-MMM-ColTmp	R	AV	25	25	25	25	25	25	25	25	25	25	25	°C	DegreesC/DegreesF

BACnet Generator Object list (Typical for each Unit)																
Object List	**Mapped Object List**	**Read/ Write**	**Object Type**	**Supply Device**	**Install Device**	**Power Device**	**Wire Device**	**Pgm Device**	**Alarmable**	**Alarm Limit**	**Alarm Type**	**Graphic**	**Trend**	**Com'd**	**Units**	**Description (acceptable value range)**
Engine Speed*	LCB#-NNN-Gen-MMM-EngineSpeed	R	AV	25	25	25	25	25	25	25	25	25	25	25	rpm	RPM
Local Battery Voltage*	LCB#-NNN-Gen-MMM-LocBttVtg	R	AV	25	25	25	25	25	25	25	25	25	25	25	dV	VoltsDCX10
Fuel Pressure*	LCB#-NNN-Gen-MMM-FuelPrs	R	AV	25	25	25	25	25	25	25	25	25	25	25	kPa	kPa/psiDDEC/MDEC/ADEC only
Fuel Temperature*	LCB#-NNN-Gen-MMM-FuelTmp	R	AV	25	25	25	25	25	25	25	25	25	25	25	°C	DegreesC/DegreesF; DDEC/MDEC/ADEConly
Fuel Rate*	LCB#-NNN-Gen-MMM-FuelRate	R	AV	25	25	25	25	25	25	25	25	25	25	25	L/h	Liters/HourX100orGallons/HourX100DDEConly
Used Last Run*	LCB#-NNN-Gen-MMM-UsedLastRun	R	AV	25	25	25	25	25	25	25	25	25	25	25	L	Liters/GallonsDDEConly
Coolant Pressure*	LCB#-NNN-Gen-MMM-ColPrs	R	AV	25	25	25	25	25	25	25	25	25	25	25	kPa	kPa/psiDDEConly
Coolant Level*	LCB#-NNN-Gen-MMM-ColLvl	R	AV	25	25	25	25	25	25	25	25	25	25	25		%X10; DDEConly
Lube Oil Temperature*	LCB#-NNN-Gen-MMM-LubeOilTmp	R	AV	25	25	25	25	25	25	25	25	25	25	25	°C	DegreesC/DegreesFDDEC/MDEC/ADEC/Waukeshaonly
Oil Level*	LCB#-NNN-Gen-MMM-OilLevel	R	AV	25	25	25	25	25	25	25	25	25	25	25		%X10; DDEConly
Crankcase Pressure*	LCB#-NNN-Gen-	R	AV	25	25	25	25	25	25	25	25	25	25	25	kPa	kPa/psiDDEConly

BACnet Generator Object list (Typical for each Unit)																
Object List	**Mapped Object List**	**Read/ Write**	**Object Type**	**Supply Device**	**Install Device**	**Power Device**	**Wire Device**	**Pgm Device**	**Alarmable**	**Alarm Limit**	**Alarm Type**	**Graphic**	**Trend**	**Com'd**	**Units**	**Description (acceptable value range)**
	MMM-CrankcasePrs															
Ambient Temperature*	LCB#-NNN-Gen-MMM-AmbTmp	R	AV	25	25	25	25	25	25	25	25	25	25	25	°C	DegreesC/DegreesF; DDEConly
ECM Battery Voltage*	LCB#-NNN-Gen-MMM-ECMBttVtg	R	AV	25	25	25	25	25	25	25	25	25	25	25	dV	VoltsDCX10; DDEC/MDEC/ADEConly
ECM Status	LCB#-NNN-Gen-MMM-ECMStatus	R	MSV	25	25	25	25	25	25	25	25	25	25	25		0=DDEC-Equipped,1=Non-ECM, 2=MDEC/ADEC-Equipped
Intake Air Temperature	LCB#-NNN-Gen-MMM-IntAirTmp	R	AV	25	25	25	25	25	25	25	25	25	25	25	°C	DegreesC/DegreesF; MDEC/ADEC/Waukeshaonly
Intake Air Pressure	LCB#-NNN-Gen-MMM-IntAirPrs	R	AV	25	25	25	25	25	25	25	25	25	25	25	°C	DegreesC/DegreesF; MDEC/ADEConly
MDEC/ADEC Fault Codes	LCB#-NNN-Gen-MMM-MDECFauCod	R		25	25	25	25	25	25	25	25	25	25	25		NumericFaultCodeMDEC/ADEConly
Analog Input00(BatteryVoltage)*	LCB#-NNN-Gen-MMM-AnalogIn00	R	AV	25	25	25	25	25	25	25	25	25	25	25	V	VoltsDC
Analog Input01*	LCB#-NNN-Gen-MMM-AnalogIn01	R		25	25	25	25	25	25	25	25	25	25	25		User-defined and calibrated through the 550 controller. See the controller operation manual.
Analog Input02*	LCB#-NNN-Gen-MMM-AnalogIn02	R		25	25	25	25	25	25	25	25	25	25	25		

BACnet Generator Object list (Typical for each Unit)																
Object List	**Mapped Object List**	**Read/ Write**	**Object Type**	**Supply Device**	**Install Device**	**Power Device**	**Wire Device**	**Pgm Device**	**Alarmable**	**Alarm Limit**	**Alarm Type**	**Graphic**	**Trend**	**Com'd**	**Units**	**Description (acceptable value range)**
Analog Input 03*	LCB#-NNN-Gen-MMM-AnalogIn03	R		25	25	25	25	25	25	25	25	25	25	25		
Analog Input 04*	LCB#-NNN-Gen-MMM-AnalogIn04	R		25	25	25	25	25	25	25	25	25	25	25		
Analog Input 05*	LCB#-NNN-Gen-MMM-AnalogIn05	R		25	25	25	25	25	25	25	25	25	25	25		
Analog Input 06*	LCB#-NNN-Gen-MMM-AnalogIn06	R		25	25	25	25	25	25	25	25	25	25	25		
Analog Input 07*	LCB#-NNN-Gen-MMM-AnalogIn07	R		25	25	25	25	25	25	25	25	25	25	25		
Digital Input Status/Option Flags	LCB#-NNN-Gen-MMM-DgtInStaFlg	R		25	25	25	25	25	25	25	25	25	25	25		Word #1 Digital Inputs 0--15: Bit 0 Remote start contacts Bit 1 Emergency stop Bit 2 Low coolant level Bit 3 Digital Input #3 Bit 4 Digital Input #4 Bit 5 Digital Input #5 Bit 6 Digital Input #6 Bit 7 Digital Input #7 Bit 8 Digital Input #8 Bit 9 Digital Input #9 Bit 10 Digital Input #10 Bit 11 Digital Input #11 Bit 12 Digital Input #12 Bit 13 Digital Input #13 Bit 14 Digital Input #14 Bit 15 Digital Input #15
Digital Input Status/Option Flags	LCB#-NNN-Gen-MMM-DgtInStaFlg	R		25	25	25	25	25	25	25	25	25	25	25		Word #2: Bit 0 Digital Input #16 Bit 1 Digital Input #17 Bit 2 Digital Input #18 Bit 3 Digital Input #19 Bit 4 Digital Input #20 Bit 5 Digital Input #21 Bit 6 Digital Input #22 Bit 7 Digital Input #23 Bit 8 DDEC Flag

BACnet Generator Object list (Typical for each Unit)																
Object List	**Mapped Object List**	**Read/ Write**	**Object Type**	**Supply Device**	**Install Device**	**Power Device**	**Wire Device**	**Pgm Device**	**Alarmable**	**Alarm Limit**	**Alarm Type**	**Graphic**	**Trend**	**Com'd**	**Units**	**Description (acceptable value range)**
																Bit 9 MDEC/ADEC Flag Bit 10 Tier1 Flag Bit 11 Waukesha Flag Bits 12--15 Unused Input Is high/option enabled if bit is set. Digital inputs are user-defined through the controller or Monitor III software. See the related operation manual.
Master Switch Position	LCB#-NNN-Gen-MMM-MsrSwtPos	R	MSV	25	25	25	25	25	25	25	25	25	25	25		0=Error,1=Auto,2=Off,3=Run
Programming Mode Status	LCB#-NNN-Gen-MMM-PrgMdSta	R	MSV	25	25	25	25	25	25	25	25	25	25	25		1=Off,2=Local,3=Remote
Total Number of Starts	LCB#-NNN-Gen-MMM-TotNumSt	R	AV	25	25	25	25	25	25	25	25	25	25	25		Starts
Total Run Time Hrs	LCB#-NNN-Gen-MMM-TotRunThr	R	AV	25	25	25	25	25	25	25	25	25	25	25		HRSX100(LSWFIRST)
Total Run Time Loaded Hrs	LCB#-NNN-Gen-MMM-TotRunTLdHr	R	AV	25	25	25	25	25	25	25	25	25	25	25		HRSX100(LSWFIRST)
Total Run Time Unloaded Hrs	LCB#-NNN-Gen-MMM-TotRunTUnLdHr	R	AV	25	25	25	25	25	25	25	25	25	25	25		HRSX100(LSWFIRST)
Total Run Time kWHrs	LCB#-NNN-Gen-MMM-TotRunTKwHr	R	AV	25	25	25	25	25	25	25	25	25	25	25	kWh	kWHrs(LSWFirst)
RTSM Total Hrs	LCB#-NNN-Gen-MMM-	R	AV	25	25	25	25	25	25	25	25	25	25	25		HRSX100(LSWFIRST)

BACnet Generator Object list (Typical for each Unit)																
Object List	**Mapped Object List**	**Read/ Write**	**Object Type**	**Supply Device**	**Install Device**	**Power Device**	**Wire Device**	**Pgm Device**	**Alarmable**	**Alarm Limit**	**Alarm Type**	**Graphic**	**Trend**	**Com'd**	**Units**	**Description (acceptable value range)**
	RTSMTotHr															
RTSM Loaded Hrs	LCB#-NNN-Gen-MMM-RTSMLdHr	R	AV	25	25	25	25	25	25	25	25	25	25	25		HRSX100(LSWFIRST)
RTSM Unloaded Hrs	LCB#-NNN-Gen-MMM-RTSMUnLdHr	R	AV	25	25	25	25	25	25	25	25	25	25	25		HRSX100(LSWFIRST)
RTSM kWHrs	LCB#-NNN-Gen-MMM-RTSMKwHr	R	AV	25	25	25	25	25	25	25	25	25	25	25	kWh	kWHrs(LSWFIRST)
Last Maintenance Date	LCB#-NNN-Gen-MMM-LastMncDate	R		25	25	25	25	25	25	25	25	25	25	25		Day|Month--Year
Operating Days Since Maint.	LCB#-NNN-Gen-MMM-OpDaysMnc	R	AV	25	25	25	25	25	25	25	25	25	25	25	Day	Days
Number of Starts Since Maint.	LCB#-NNN-Gen-MMM-NumStSinceMnc	R	AV	25	25	25	25	25	25	25	25	25	25	25		Starts
Last Start Date	LCB#-NNN-Gen-MMM-LastStDate	R		25	25	25	25	25	25	25	25	25	25	25		Day|Month--Year
Last Start Time	LCB#-NNN-Gen-MMM-LastStTime	R		25	25	25	25	25	25	25	25	25	25	25		Hr|Min
Last Run Length	LCB#-NNN-Gen-MMM-LastRunLth	R	AV	25	25	25	25	25	25	25	25	25	25	25		HrsX100

BACnet Generator Object list (Typical for each Unit)																
Object List	**Mapped Object List**	**Read/ Write**	**Object Type**	**Supply Device**	**Install Device**	**Power Device**	**Wire Device**	**Pgm Device**	**Alarmable**	**Alarm Limit**	**Alarm Type**	**Graphic**	**Trend**	**Com'd**	**Units**	**Description (acceptable value range)**
Last Run Loaded	LCB#-NNN-Gen-MMM-LastRunLd	R	BV	25	25	25	25	25	25	25	25	25	25	25		0=Unloaded,1=Loaded
Timed Run Time (Hr:Min)	LCB#-NNN-Gen-MMM-TimedRunTime	R/W		25	25	25	25	25	25	25	25	25	25	25		Hr|Min
Timed Run Remaining (Hr:Min)	LCB#-NNN-Gen-MMM-TimedRunTime	R		25	25	25	25	25	25	25	25	25	25	25		Hr|Min
Is Timed Run Active	LCB#-NNN-Gen-MMM-IsTRunAct	R	BV	25	25	25	25	25	25	25	25	25	25	25		1=True,0=False
				25	25	25	25	25	25	25	25	25	25	25		
Current Date	LCB#-NNN-Gen-MMM-CurDate	R/W		25	25	25	25	25	25	25	25	25	25	25		Day | Month -- 2 Digit Year | Day of Week (0=Sunday)
Current Time (24 Hr Clock)	LCB#-NNN-Gen-MMM-CurTime	R/W		25	25	25	25	25	25	25	25	25	25	25		Hr|Min
Time Delay Engine Start	LCB#-NNN-Gen-MMM-TDlyEnSt	R/W		25	25	25	25	25	25	25	25	25	25	25		Min | Sec
Time Delay Starting Aid	LCB#-NNN-Gen-MMM-TDlyStAid	R/W		25	25	25	25	25	25	25	25	25	25	25		Min | Sec
Time Delay Crank On	LCB#-NNN-Gen-MMM-TDlyCrkOn	R/W		25	25	25	25	25	25	25	25	25	25	25		Min | Sec
Time Delay Crank Pause	LCB#-NNN-	R/		25	25	25	25	25	25	25	25	25	25	25		Min | Sec

BACnet Generator Object list (Typical for each Unit)																
Object List	**Mapped Object List**	**Read/ Write**	**Object Type**	**Supply Device**	**Install Device**	**Power Device**	**Wire Device**	**Pgm Device**	**Alarmable**	**Alarm Limit**	**Alarm Type**	**Graphic**	**Trend**	**Com'd**	**Units**	**Description (acceptable value range)**
	Gen-MMM-TDlyCrkPause	W														
Time Delay Engine Cooldown	LCB#-NNN-Gen-MMM-TDlyEnClDn	R/W		25	25	25	25	25	25	25	25	25	25	25		Min | Sec
Time Delay Crank Cycles	LCB#-NNN-Gen-MMM-TDlyCrkCyc	R/W		25	25	25	25	25	25	25	25	25	25	25		Min | Sec
Time Delay Overvoltage	LCB#-NNN-Gen-MMM-TDlyOvrVtg	R/W		25	25	25	25	25	25	25	25	25	25	25		Min | Sec
Time Delay Undervoltage	LCB#-NNN-Gen-MMM-TDlyUdrVtg	R/W		25	25	25	25	25	25	25	25	25	25	25		Min | Sec
Time Delay Load Shed kW	LCB#-NNN-Gen-MMM-TDlyLdShedKw	R/W		25	25	25	25	25	25	25	25	25	25	25		Min | Sec
				25	25	25	25	25	25	25	25	25	25	25		
Operating Mode	LCB#-NNN-Gen-MMM-OpMode	R/W		25	25	25	25	25	25	25	25	25	25	25		Bits0--1: Operating Mode1=Standby, 2=Prime Power Bit2: Unused Bit3: MDEC/ADECDSC Mode 1=Enabled, 0=Dis-abled Bit4: MDEC/ADECVSGMode1=Enabled,0=Dis-abledBits5--7:TempSensorType
System Voltage	LCB#-NNN-Gen-MMM-SysVtg	R/W	AV	25	25	25	25	25	25	25	25	25	25	25	V	VoltsAC
System Frequency	LCB#-NNN-Gen-MMM-SysFrq	R/W	AV	25	25	25	25	25	25	25	25	25	25	25	Hz	Hz
System Phase	LCB#-NNN-	R/	MSV	25	25	25	25	25	25	25	25	25	25	25		1=3PhaseDelta,2=3PhaseWye

BACnet Generator Object list (Typical for each Unit)																
Object List	**Mapped Object List**	**Read/ Write**	**Object Type**	**Supply Device**	**Install Device**	**Power Device**	**Wire Device**	**Pgm Device**	**Alarmable**	**Alarm Limit**	**Alarm Type**	**Graphic**	**Trend**	**Com'd**	**Units**	**Description (acceptable value range)**
	Gen-MMM-SysPhase	W														,3=SinglePhase
kW Rating	LCB#-NNN-Gen-MMM-KwRating	R/W	AV	25	25	25	25	25	25	25	25	25	25	25	kW	kW
Load Shed Output	LCB#-NNN-Gen-MMM-LdShedOutput	R/W	AV	25	25	25	25	25	25	25	25	25	25	25	%	%ofkWRATING
Overvoltage	LCB#-NNN-Gen-MMM-OvrVtg	R/W	AV	25	25	25	25	25	25	25	25	25	25	25	%	%ofSystemVoltage
Undervoltage	LCB#-NNN-Gen-MMM-UdrVtg	R/W	AV	25	25	25	25	25	25	25	25	25	25	25	%	%ofSystemVoltage
Overfrequency	LCB#-NNN-Gen-MMM-OvrFrq	R/W	AV	25	25	25	25	25	25	25	25	25	25	25	%	%ofSystemFrequency
Underfrequency	LCB#-NNN-Gen-MMM-UdrFrq	R/W	AV	25	25	25	25	25	25	25	25	25	25	25	%	%ofSystemFrequency
Overspeed	LCB#-NNN-Gen-MMM-Ovrspeed	R/W	AV	25	25	25	25	25	25	25	25	25	25	25	Hz	Hz
Battery Voltage	LCB#-NNN-Gen-MMM-BttVtg	R/W	AV	25	25	25	25	25	25	25	25	25	25	25	dV	VoltsDCX10
Lo Battery Voltage	LCB#-NNN-Gen-MMM-LoBttVtg	R/W	AV	25	25	25	25	25	25	25	25	25	25	25	dV	VoltsDCX10
Hi Battery Voltage	LCB#-NNN-Gen-MMM-HiBttVtg	R/W	AV	25	25	25	25	25	25	25	25	25	25	25	dV	VoltsDCX10

BACnet Generator Object list (Typical for each Unit)																
Object List	**Mapped Object List**	**Read/ Write**	**Object Type**	**Supply Device**	**Install Device**	**Power Device**	**Wire Device**	**Pgm Device**	**Alarmable**	**Alarm Limit**	**Alarm Type**	**Graphic**	**Trend**	**Com'd**	**Units**	**Description (acceptable value range)**
Metric Units	LCB#-NNN-Gen-MMM-MetricUnits	R/W	BV	25	25	25	25	25	25	25	25	25	25	25		1=True,0=False
NFPA110 Defaults Enabled	LCB#-NNN-Gen-MMM-NFPA110DefEna	R/W	BV	25	25	25	25	25	25	25	25	25	25	25		1=True,0=False
Rated Current	LCB#-NNN-Gen-MMM-RatedCur	R	AV	25	25	25	25	25	25	25	25	25	25	25	A	AmpsAC
Cooldown Temperature Override	LCB#-NNN-Gen-MMM-ClDnTmpOvd	R/W	BV	25	25	25	25	25	25	25	25	25	25	25		1=True,0=False
Final Assembly Date	LCB#-NNN-Gen-MMM-FnlAsbDate	R		25	25	25	25	25	25	25	25	25	25	25		Day|Month--Year
Final Assembly Clock No.	LCB#-NNN-Gen-MMM-FnlAsbClkNo	R		25	25	25	25	25	25	25	25	25	25	25		99999Max(LSWFIRST)
Total Operating Days	LCB#-NNN-Gen-MMM-TotOpDay	R	AV	25	25	25	25	25	25	25	25	25	25	25	Day	Days
Model No.	LCB#-NNN-Gen-MMM-ModelNo	R		25	25	25	25	25	25	25	25	25	25	25		26CharacterString
Spec. No.	LCB#-NNN-Gen-MMM-SpecNo	R		25	25	25	25	25	25	25	25	25	25	25		16CharacterString
Genset Serial No.	LCB#-NNN-Gen-MMM-GensetSrlNo	R		25	25	25	25	25	25	25	25	25	25	25		20CharacterString

BACnet Generator Object list (Typical for each Unit)																
Object List	**Mapped Object List**	**Read/ Write**	**Object Type**	**Supply Device**	**Install Device**	**Power Device**	**Wire Device**	**Pgm Device**	**Alarmable**	**Alarm Limit**	**Alarm Type**	**Graphic**	**Trend**	**Com'd**	**Units**	**Description (acceptable value range)**
Alternator Part No.	LCB#-NNN-Gen-MMM-AltPartNo	R		25	25	25	25	25	25	25	25	25	25	25		20CharacterString
Engine Part No.	LCB#-NNN-Gen-MMM-EnginePartNo	R		25	25	25	25	25	25	25	25	25	25	25		20CharacterString
Control No.	LCB#-NNN-Gen-MMM-ControlNo	R		25	25	25	25	25	25	25	25	25	25	25		(LSWFIRST)
Code Version	LCB#-NNN-Gen-MMM-CodeVersion	R		25	25	25	25	25	25	25	25	25	25	25		6CharacterString
Setup Lock	LCB#-NNN-Gen-MMM-SetupLock	R	BV	25	25	25	25	25	25	25	25	25	25	25		1=Locked,0=Unlocked
Engine Model No.	LCB#-NNN-Gen-MMM-EnMdlNo	R		25	25	25	25	25	25	25	25	25	25	25		8 CharacterString
Engine Serial No.	LCB#-NNN-Gen-MMM-EnSrlNo	R		25	25	25	25	25	25	25	25	25	25	25		10CharacterString
Unit No.	LCB#-NNN-Gen-MMM-UnitNo	R		25	25	25	25	25	25	25	25	25	25	25		10CharacterString
ECM Serial No.	LCB#-NNN-Gen-MMM-ECMSerialNo	R		25	25	25	25	25	25	25	25	25	25	25		8 CharacterString
Digital Inputs 1--21 Setup				25	25	25	25	25	25	25	25	25	25	25		
Digital Input 01 to 21	LCB#-NNN-	R/		25	25	25	25	25	25	25	25	25	25	25		Word 1: Enabled/ Function ID;

BACnet Generator Object list (Typical for each Unit)																
Object List	**Mapped Object List**	**Read/ Write**	**Object Type**	**Supply Device**	**Install Device**	**Power Device**	**Wire Device**	**Pgm Device**	**Alarmable**	**Alarm Limit**	**Alarm Type**	**Graphic**	**Trend**	**Com'd**	**Units**	**Description (acceptable value range)**
	Gen-MMM-DgtIn01to21	W														Word 2: Inhibit Time Min|Sec); Word 3: Delay Time (Min|Sec); Word 4--13: 10 Words for 20 Character Description String; Refer to Section 2 5 7 Digital Auxiliary Input; Functions, for descriptions and codes; See the controller operation manual, TP-6200, for factory-reserved and user-selectable inputs for various applications.
Analog Input Setup				25	25	25	25	25	25	25	25	25	25	25		
Analog Input 01 to 07	LCB#-NNN-Gen-MMM-AnaIn01to07	R/W		25	25	25	25	25	25	25	25	25	25	25		Refer to the controller operation manual, TP-6200, for identification of user inputs and factory-reserved input for specific applications. Word 1: Warning/Shutdown Enable [Bits 8 9] Inhibit Time (Sec); Word 2: Warning Time (Sec) | Shutdown Time (Sec); Word 3: Lower Warning Limit; Word 4: Upper Warning Limit; Word 5: Lower Shutdown Limit; Word 6: Upper Shutdown Limit; Word 7--16:Analog voltage adjust for switchgear applications only; 10 words for 20 character description string.
Analog Inputs 8--15 Setup				25	25	25	25	25	25	25	25	25	25	25		
Reserved For Non-ECM	LCB#-NNN-Gen-MMM-AAAAAA	R		25	25	25	25	25	25	25	25	25	25	25		
Define/Inspect RDO Status (2 WORDS).				25	25	25	25	25	25	25	25	25	25	25		
RDO Status: RDO1 -- RDO16	LCB#-NNN-Gen-MMM-RDOSta01to16	R		25	25	25	25	25	25	25	25	25	25	25		Output Is High If Individual Bit Is Set. Bit 0 = RDO 1
RDO Status: RDO17 -- RDO31	LCB#-NNN-Gen-MMM-	R		25	25	25	25	25	25	25	25	25	25	25		Output Is High If Individual Bit Is Set. Bit 0 = RDO 17

BACnet Generator Object list (Typical for each Unit)																
Object List	**Mapped Object List**	**Read/ Write**	**Object Type**	**Supply Device**	**Install Device**	**Power Device**	**Wire Device**	**Pgm Device**	**Alarmable**	**Alarm Limit**	**Alarm Type**	**Graphic**	**Trend**	**Com'd**	**Units**	**Description (acceptable value range)**
	RDOSta 17to31															
Define/Inspect RDOs (RW, 1 WORD per RDO).				25	25	25	25	25	25	25	25	25	25	25		
Relay Driver Output 01 to 24	LCB#-NNN-Gen-MMM-RlyDrvO 01to24	R / W		25	25	25	25	25	25	25	25	25	25	25		Selection | Setpoint; Function uses the event codes in Section 2 5 6. Setpoints are for analog inputs only; otherwise setpoint=0.
Relay Driver Output 25 to 31	LCB#-NNN-Gen-MMM-RlyDrvO 25to31	R / W		25	25	25	25	25	25	25	25	25	25	25		Function | Setpoint; Function uses the event codes in Section 2 5 6. Setpoints are for analog inputs only; otherwise setpoint=0.
Event History.				25	25	25	25	25	25	25	25	25	25	25		
Event History -- Page 1 (1--10)	LCB#-NNN-Gen-MMM-EvtHstPage1	R		25	25	25	25	25	25	25	25	25	25	25		10 events, 4 words each: Event Code|Setpoint Hr|Min Day|Month Year; See Section 2.5.6 for event codes. Setpoints are for analog inputs only; otherwise setpoint=0; Note: Message code = 0xFFat end of history
Event History -- Page 2 (11--20)	LCB#-NNN-Gen-MMM-EvtHstPage2	R		25	25	25	25	25	25	25	25	25	25	25		10 events, 4 words each: Event Code|Setpoint Hr|Min Day|Month Year; See Section 2.5.6 for event codes. Setpoints are for analog inputs only; otherwise setpoint=0; Note: Message code = 0xFFat end of history
Event History -- Page 3 (21--31)	LCB#-NNN-Gen-MMM-EvtHstPage3	R		25	25	25	25	25	25	25	25	25	25	25		10 events, 4 words each: Event Code|Setpoint Hr|Min Day|Month Year; See Section 2.5.6 for event codes. Setpoints are for analog inputs only; otherwise setpoint=0; Note: Message code = 0xFFat end of history
Event History -- Page 4 (31--40)	LCB#-NNN-Gen-MMM-EvtHstPage4	R		25	25	25	25	25	25	25	25	25	25	25		10 events, 4 words each: Event Code|Setpoint Hr|Min Day|Month Year; See Section 2.5.6 for event codes. Setpoints are for analog inputs only; otherwise setpoint=0; Note: Message code = 0xFFat end of history
Event History -- Page 5 (41--50)	LCB#-NNN-Gen-MMM-	R		25	25	25	25	25	25	25	25	25	25	25		10 events, 4 words each: Event Code|Setpoint Hr|Min Day|Month Year; See Section 2.5.6 for event codes.

BACnet Generator Object list (Typical for each Unit)																
Object List	**Mapped Object List**	**Read/ Write**	**Object Type**	**Supply Device**	**Install Device**	**Power Device**	**Wire Device**	**Pgm Device**	**Alarmable**	**Alarm Limit**	**Alarm Type**	**Graphic**	**Trend**	**Com'd**	**Units**	**Description (acceptable value range)**
	EvtHstPage5															Setpoints are for analog inputs only; otherwise setpoint=0; Note: Message code = 0xFFat end of history
Event History -- Page 6 (51--60)	LCB#-NNN-Gen-MMM-EvtHstPage6	R		25	25	25	25	25	25	25	25	25	25	25		10 events, 4 words each: Event Code|Setpoint Hr|Min Day|Month Year; See Section 2.5.6 for event codes. Setpoints are for analog inputs only; otherwise setpoint=0; Note: Message code = 0xFFat end of history
Event History -- Page 7 (61--70)	LCB#-NNN-Gen-MMM-EvtHstPage7	R		25	25	25	25	25	25	25	25	25	25	25		10 events, 4 words each: Event Code|Setpoint Hr|Min Day|Month Year; See Section 2.5.6 for event codes. Setpoints are for analog inputs only; otherwise setpoint=0; Note: Message code = 0xFFat end of history
Event History -- Page 8 (71--80)	LCB#-NNN-Gen-MMM-EvtHstPage8	R		25	25	25	25	25	25	25	25	25	25	25		10 events, 4 words each: Event Code|Setpoint Hr|Min Day|Month Year; See Section 2.5.6 for event codes. Setpoints are for analog inputs only; otherwise setpoint=0; Note: Message code = 0xFFat end of history
Event History -- Page 9 (81--90)	LCB#-NNN-Gen-MMM-EvtHstPage9	R		25	25	25	25	25	25	25	25	25	25	25		10 events, 4 words each: Event Code|Setpoint Hr|Min Day|Month Year; See Section 2.5.6 for event codes. Setpoints are for analog inputs only; otherwise setpoint=0; Note: Message code = 0xFFat end of history
Event History -- Page 10 (91--100)	LCB#-NNN-Gen-MMM-EvtHstPage10	R		25	25	25	25	25	25	25	25	25	25	25		10 events, 4 words each: Event Code|Setpoint Hr|Min Day|Month Year; See Section 2.5.6 for event codes. Setpoints are for analog inputs only; otherwise setpoint=0; Note: Message code = 0xFFat end of history
Customer-Defined Character Strings (defined through Monitor software)				25	25	25	25	25	25	25	25	25	25	25		
Designation	LCB#-NNN-Gen-MMM-Designati	R/W		25	25	25	25	25	25	25	25	25	25	25		9CharacterString

BACnet Generator Object list (Typical for each Unit)																
Object List	**Mapped Object List**	**Read/ Write**	**Object Type**	**Supply Device**	**Install Device**	**Power Device**	**Wire Device**	**Pgm Device**	**Alarmable**	**Alarm Limit**	**Alarm Type**	**Graphic**	**Trend**	**Com'd**	**Units**	**Description (acceptable value range)**
	on															
Load	LCB#-NNN-Gen-MMM-Load	R/W		25	25	25	25	25	25	25	25	25	25	25		20CharacterString
Location	LCB#-NNN-Gen-MMM-Location	R/W		25	25	25	25	25	25	25	25	25	25	25		20CharacterString
Remote Functions				25	25	25	25	25	25	25	25	25	25	25		
Start Timed Run	LCB#-NNN-Gen-MMM-StTRun	W	BV	25	25	25	25	25	25	25	25	25	25	25		1=Start,0=NoStart
Stop Timed Run	LCB#-NNN-Gen-MMM-StpTRun	W	BV	25	25	25	25	25	25	25	25	25	25	25		1=Stop,0=NoStop
Reset Maintenance Records	LCB#-NNN-Gen-MMM-RstMncRcd	W	BV	25	25	25	25	25	25	25	25	25	25	25		1=Reset,0=NoReset
Remote Fault Reset	LCB#-NNN-Gen-MMM-RemFauRst	W	BV	25	25	25	25	25	25	25	25	25	25	25		1=Reset,0=NoReset
System Event Stack				25	25	25	25	25	25	25	25	25	25	25		
System Events 0--15 Word #1	LCB#-NNN-Gen-MMM-SysEvt0to15W1	R		25	25	25	25	25	25	25	25	25	25	25		System event status. 0=not active; 1=active; Each bit corresponds to a different event code. See Sections 2.5.5 and 2.5.6.
System Events 16--31 Word #2	LCB#-NNN-Gen-MMM-SysEvt16to31W2			25	25	25	25	25	25	25	25	25	25	25		
System Events 32--47 Word #3	LCB#-NNN-Gen-MMM-SysEvt32			25	25	25	25	25	25	25	25	25	25	25		

BACnet Generator Object list (Typical for each Unit)																
Object List	**Mapped Object List**	**Read/ Write**	**Object Type**	**Supply Device**	**Install Device**	**Power Device**	**Wire Device**	**Pgm Device**	**Alarmable**	**Alarm Limit**	**Alarm Type**	**Graphic**	**Trend**	**Com'd**	**Units**	**Description (acceptable value range)**
	to47W3															
System Events 48--63 Word #4	LCB#-NNN-Gen-MMM-SysEvt48to63W4			25	25	25	25	25	25	25	25	25	25	25		
System Events 64--79 Word #5	LCB#-NNN-Gen-MMM-SysEvt64to79W5			25	25	25	25	25	25	25	25	25	25	25		
System Events 80--95 Word #6	LCB#-NNN-Gen-MMM-SysEvt80to95W6			25	25	25	25	25	25	25	25	25	25	25		
System Events 96--111 Word #7	LCB#-NNN-Gen-MMM-SysEvt96to111W7			25	25	25	25	25	25	25	25	25	25	25		
System Events 112--127 Word #8	LCB#-NNN-Gen-MMM-SysEvt112to127W8			25	25	25	25	25	25	25	25	25	25	25		
System Events 128--143 Word #9	LCB#-NNN-Gen-MMM-SysEvt128to143W9			25	25	25	25	25	25	25	25	25	25	25		
System Events 144--159 Word #10	LCB#-NNN-Gen-MMM-SysEvt144to159W10			25	25	25	25	25	25	25	25	25	25	25		
System Events 160--175 Word #11	LCB#-NNN-Gen-MMM-SysEvt160to175W11			25	25	25	25	25	25	25	25	25	25	25		
System Events 176--191 Word	LCB#-NNN-			25	25	25	25	25	25	25	25	25	25	25		

BACnet Generator Object list (Typical for each Unit)																
Object List	**Mapped Object List**	**Read/ Write**	**Object Type**	**Supply Device**	**Install Device**	**Power Device**	**Wire Device**	**Pgm Device**	**Alarmable**	**Alarm Limit**	**Alarm Type**	**Graphic**	**Trend**	**Com'd**	**Units**	**Description (acceptable value range)**
#12	Gen-MMM-SysEvt176to191W12															
System Events 192--207 Word #13	LCB#-NNN-Gen-MMM-SysEvt192to207W13			25	25	25	25	25	25	25	25	25	25	25		
System Events 208--223 Word #14	LCB#-NNN-Gen-MMM-SysEvt208to223W14			25	25	25	25	25	25	25	25	25	25	25		
System Events 224--239 Word #15	LCB#-NNN-Gen-MMM-SysEvt224to239W15			25	25	25	25	25	25	25	25	25	25	25		
System Events 240--255 Word #16	LCB#-NNN-Gen-MMM-SysEvt240to255W16			25	25	25	25	25	25	25	25	25	25	25		
Define/Inspect Defined Common Faults:				25	25	25	25	25	25	25	25	25	25	25		
EmergencyStop	LCB#-NNN-Gen-MMM-EmeStp	R/W		25	25	25	25	25	25	25	25	25	25	25		Selected|Setpoint|pTheselectedbyteindicateswhetheragivenfaulthasbidhdfidflygbeenassignedtothedefinedcommonfault:0tidtthdfidflt;0=notassignedtothedefinedcommonfault;1=assignedtothedefinedcommonfault.esetpontytencatestesetpontvaueortatTThhesetpoiintbbyteiinddiicatesthhesetpoiintvallueffforthhatitem.item.
Overspeed	LCB#-NNN-Gen-MMM-Overspeed			25	25	25	25	25	25	25	25	25	25	25		

BACnet Generator Object list (Typical for each Unit)																
Object List	**Mapped Object List**	**Read/ Write**	**Object Type**	**Supply Device**	**Install Device**	**Power Device**	**Wire Device**	**Pgm Device**	**Alarmable**	**Alarm Limit**	**Alarm Type**	**Graphic**	**Trend**	**Com'd**	**Units**	**Description (acceptable value range)**
Overcrank	LCB#-NNN-Gen-MMM-Overcrank			25	25	25	25	25	25	25	25	25	25	25		
High Coolant Temperature Shutdown	LCB#-NNN-Gen-MMM-HiColTmpSdn			25	25	25	25	25	25	25	25	25	25	25		
Oil Pressure Shutdown	LCB#-NNN-Gen-MMM-OilPrsSdn			25	25	25	25	25	25	25	25	25	25	25		
Low Coolant Temperature (ECMonly)	LCB#-NNN-Gen-MMM-LoColTmp			25	25	25	25	25	25	25	25	25	25	25		
Low Fuel	LCB#-NNN-Gen-MMMLowFuel			25	25	25	25	25	25	25	25	25	25	25		
High Coolant Temperature Warning	LCB#-NNN-Gen-MMM-HiColTmpWrn			25	25	25	25	25	25	25	25	25	25	25		
Oil Pressure Warning	LCB#-NNN-Gen-MMM-OilPrsWrn			25	25	25	25	25	25	25	25	25	25	25		
Master Not In Auto	LCB#-NNN-Gen-MMM-MsrNotInAuto			25	25	25	25	25	25	25	25	25	25	25		
NFPA110 Fault	LCB#-NNN-Gen-MMM-NFPA110Fau			25	25	25	25	25	25	25	25	25	25	25		
Low Battery Voltage	LCB#-NNN-Gen-MMM-			25	25	25	25	25	25	25	25	25	25	25		

BACnet Generator Object list (Typical for each Unit)																
Object List	**Mapped Object List**	**Read/ Write**	**Object Type**	**Supply Device**	**Install Device**	**Power Device**	**Wire Device**	**Pgm Device**	**Alarmable**	**Alarm Limit**	**Alarm Type**	**Graphic**	**Trend**	**Com'd**	**Units**	**Description (acceptable value range)**
	LoBttVtg															
High Battery Voltage	LCB#-NNN-Gen-MMM-HiBttVtg			25	25	25	25	25	25	25	25	25	25	25		
Battery Charger Fault	LCB#-NNN-Gen-MMM-BttCgrFau			25	25	25	25	25	25	25	25	25	25	25		
System Ready	LCB#-NNN-Gen-MMM-SysReady			25	25	25	25	25	25	25	25	25	25	25		
Loss of ECM Comm(ECM only)	LCB#-NNN-Gen-MMM-LossOfECMCom			25	25	25	25	25	25	25	25	25	25	25		
No Oil Pressure Signal	LCB#-NNN-Gen-MMM-NoOilPrsSgl			25	25	25	25	25	25	25	25	25	25	25		
High Oil Temperature Shutdown	LCB#-NNN-Gen-MMM-HiOilTmpSdn			25	25	25	25	25	25	25	25	25	25	25		
No Coolant Temperature Signal	LCB#-NNN-Gen-MMM-NoColTmpSgl			25	25	25	25	25	25	25	25	25	25	25		
Low Coolant Level	LCB#-NNN-Gen-MMM-LoColLvl			25	25	25	25	25	25	25	25	25	25	25		
Speed Sensor Fault	LCB#-NNN-Gen-MMM-SpdSenFau			25	25	25	25	25	25	25	25	25	25	25		

BACnet Generator Object list (Typical for each Unit)																
Object List	**Mapped Object List**	**Read/ Write**	**Object Type**	**Supply Device**	**Install Device**	**Power Device**	**Wire Device**	**Pgm Device**	**Alarmable**	**Alarm Limit**	**Alarm Type**	**Graphic**	**Trend**	**Com'd**	**Units**	**Description (acceptable value range)**
Locked Rotor	LCB#-NNN-Gen-MMM-LockedRotor			25	25	25	25	25	25	25	25	25	25	25		
Master Switch Error	LCB#-NNN-Gen-MMM-MsrSwtError			25	25	25	25	25	25	25	25	25	25	25		
Master Switch Open	LCB#-NNN-Gen-MMM-MsrSwtOpen			25	25	25	25	25	25	25	25	25	25	25		
Master Switch Off	LCB#-NNN-Gen-MMM-MsrSwtOff			25	25	25	25	25	25	25	25	25	25	25		
AC Sensing Loss	LCB#-NNN-Gen-MMM-ACSenLoss			25	25	25	25	25	25	25	25	25	25	25		
Over Voltage	LCB#-NNN-Gen-MMM-OverVoltage			25	25	25	25	25	25	25	25	25	25	25		
Under Voltage	LCB#-NNN-Gen-MMM-UnderVoltage			25	25	25	25	25	25	25	25	25	25	25		
Weak Battery	LCB#-NNN-Gen-MMM-WeakBattery			25	25	25	25	25	25	25	25	25	25	25		
Over Frequency	LCB#-NNN-Gen-MMM-OverFrequency			25	25	25	25	25	25	25	25	25	25	25		
Under Frequency	LCB#-NNN-Gen-			25	25	25	25	25	25	25	25	25	25	25		

BACnet Generator Object list (Typical for each Unit)																
Object List	**Mapped Object List**	**Read/ Write**	**Object Type**	**Supply Device**	**Install Device**	**Power Device**	**Wire Device**	**Pgm Device**	**Alarmable**	**Alarm Limit**	**Alarm Type**	**Graphic**	**Trend**	**Com'd**	**Units**	**Description (acceptable value range)**
	MMM-UnderFrq															
Load Shed kW Overload	LCB#-NNN-Gen-MMM-LdShedKwOvl	R/W		25	25	25	25	25	25	25	25	25	25	25		Selected|Setpoint|p
Load Shed kW Under Frequency	LCB#-NNN-Gen-MMM-LdSdKwUdrFrq			25	25	25	25	25	25	25	25	25	25	25		
Over Current	LCB#-NNN-Gen-MMM-OverCurrent			25	25	25	25	25	25	25	25	25	25	25		
EPS Supplying Load	LCB#-NNN-Gen-MMM-EPSSupLd			25	25	25	25	25	25	25	25	25	25	25		
Internal Fault	LCB#-NNN-Gen-MMM-InternalFault			25	25	25	25	25	25	25	25	25	25	25		
Engine Cooldown Delay	LCB#-NNN-Gen-MMM-EnCldnDly			25	25	25	25	25	25	25	25	25	25	25		
Engine Start Delay	LCB#-NNN-Gen-MMM-EnStDly			25	25	25	25	25	25	25	25	25	25	25		
Starting Aid	LCB#-NNN-Gen-MMM-Starting Aid			25	25	25	25	25	25	25	25	25	25	25		
Generator Running	LCB#-NNN-Gen-MMM-GenRun			25	25	25	25	25	25	25	25	25	25	25		

BACnet Generator Object list (Typical for each Unit)																
Object List	**Mapped Object List**	**Read/ Write**	**Object Type**	**Supply Device**	**Install Device**	**Power Device**	**Wire Device**	**Pgm Device**	**Alarmable**	**Alarm Limit**	**Alarm Type**	**Graphic**	**Trend**	**Com'd**	**Units**	**Description (acceptable value range)**
Air Damper Control	LCB#-NNN-Gen-MMM-AirDmpCtl			25	25	25	25	25	25	25	25	25	25	25		
Ground Fault	LCB#-NNN-Gen-MMM-GroundFault			25	25	25	25	25	25	25	25	25	25	25		
				25	25	25	25	25	25	25	25	25	25	25		
EEPROM Write Failure	LCB#-NNN-Gen-MMM-EEPROMWrtFr	R/W		25	25	25	25	25	25	25	25	25	25	25		Selected|Setpoint|p
Critical Overvoltage	LCB#-NNN-Gen-MMM-CriOvrVtg			25	25	25	25	25	25	25	25	25	25	25		
Alternator Protect Shutdown	LCB#-NNN-Gen-MMM-AltProtectSdn			25	25	25	25	25	25	25	25	25	25	25		
Air Damper Indicator	LCB#-NNN-Gen-MMM-AirDmpIdt			25	25	25	25	25	25	25	25	25	25	25		
Digital Input 01	LCB#-NNN-Gen-MMM-DgtInput01	R/W		25	25	25	25	25	25	25	25	25	25	25		Note: Analog and digital inputs are user-defined through the controller or Monitor III software. See the related operation manual.
Digital Input 02	LCB#-NNN-Gen-MMM-DgtInput02			25	25	25	25	25	25	25	25	25	25	25		
Digital Input 03	LCB#-NNN-Gen-MMM-DgtInput03			25	25	25	25	25	25	25	25	25	25	25		

BACnet Generator Object list (Typical for each Unit)																
Object List	**Mapped Object List**	**Read/ Write**	**Object Type**	**Supply Device**	**Install Device**	**Power Device**	**Wire Device**	**Pgm Device**	**Alarmable**	**Alarm Limit**	**Alarm Type**	**Graphic**	**Trend**	**Com'd**	**Units**	**Description (acceptable value range)**
Digital Input 04	LCB#-NNN-Gen-MMM-DgtInput 04			25	25	25	25	25	25	25	25	25	25	25		
Digital Input 05	LCB#-NNN-Gen-MMM-DgtInput 05			25	25	25	25	25	25	25	25	25	25	25		
Digital Input 06	LCB#-NNN-Gen-MMM-DgtInput 06			25	25	25	25	25	25	25	25	25	25	25		
Digital Input 07	LCB#-NNN-Gen-MMM-DgtInput 07			25	25	25	25	25	25	25	25	25	25	25		
Digital Input 08	LCB#-NNN-Gen-MMM-DgtInput 08			25	25	25	25	25	25	25	25	25	25	25		
Digital Input 09	LCB#-NNN-Gen-MMM-DgtInput 09			25	25	25	25	25	25	25	25	25	25	25		
Digital Input 10	LCB#-NNN-Gen-MMM-DgtInput 10			25	25	25	25	25	25	25	25	25	25	25		
Digital Input 11	LCB#-NNN-Gen-MMM-DgtInput 11			25	25	25	25	25	25	25	25	25	25	25		
Digital Input 12	LCB#-NNN-Gen-MMM-DgtInput 12			25	25	25	25	25	25	25	25	25	25	25		
Digital Input 13	LCB#-NNN-Gen-			25	25	25	25	25	25	25	25	25	25	25		

BACnet Generator Object list (Typical for each Unit)																
Object List	**Mapped Object List**	**Read/ Write**	**Object Type**	**Supply Device**	**Install Device**	**Power Device**	**Wire Device**	**Pgm Device**	**Alarmable**	**Alarm Limit**	**Alarm Type**	**Graphic**	**Trend**	**Com'd**	**Units**	**Description (acceptable value range)**
	MMM-DgtInput 13															
Digital Input 14	LCB#-NNN-Gen-MMM-DgtInput 14			25	25	25	25	25	25	25	25	25	25	25		
Digital Input 15	LCB#-NNN-Gen-MMM-DgtInput 15			25	25	25	25	25	25	25	25	25	25	25		
Digital Input 16	LCB#-NNN-Gen-MMM-DgtInput 16			25	25	25	25	25	25	25	25	25	25	25		
Digital Input 17	LCB#-NNN-Gen-MMM-DgtInput 17			25	25	25	25	25	25	25	25	25	25	25		
Digital Input 18	LCB#-NNN-Gen-MMM-DgtInput 18			25	25	25	25	25	25	25	25	25	25	25		
Digital Input 19	LCB#-NNN-Gen-MMM-DgtInput 19			25	25	25	25	25	25	25	25	25	25	25		
Digital Input 20	LCB#-NNN-Gen-MMM-DgtInput 20			25	25	25	25	25	25	25	25	25	25	25		
Analog Input 01	LCB#-NNN-Gen-MMM-AnalogInput01			25	25	25	25	25	25	25	25	25	25	25		
Analog Input 02	LCB#-NNN-Gen-MMM-AnalogInput02			25	25	25	25	25	25	25	25	25	25	25		

BACnet Generator Object list (Typical for each Unit)																
Object List	**Mapped Object List**	**Read/ Write**	**Object Type**	**Supply Device**	**Install Device**	**Power Device**	**Wire Device**	**Pgm Device**	**Alarmable**	**Alarm Limit**	**Alarm Type**	**Graphic**	**Trend**	**Com'd**	**Units**	**Description (acceptable value range)**
Analog Input 03	LCB#-NNN-Gen-MMM-AnalogInput03			25	25	25	25	25	25	25	25	25	25	25		
Analog Input 04	LCB#-NNN-Gen-MMM-AnalogInput04			25	25	25	25	25	25	25	25	25	25	25		
Analog Input 05	LCB#-NNN-Gen-MMM-AnalogInput05			25	25	25	25	25	25	25	25	25	25	25		
Analog Input 06	LCB#-NNN-Gen-MMM-AnalogInput06			25	25	25	25	25	25	25	25	25	25	25		
Analog Input 07	LCB#-NNN-Gen-MMM-AnalogInput07			25	25	25	25	25	25	25	25	25	25	25		
Defined Common Fault	LCB#-NNN-Gen-MMM-Defined ComFau			25	25	25	25	25	25	25	25	25	25	25		
Software Controlled RDO#1	LCB#-NNN-Gen-MMM-SfwCtlRDO01	R/W		25	25	25	25	25	25	25	25	25	25	25		Selected | Setpoint
Software Controlled RDO#2	LCB#-NNN-Gen-MMM-SfwCtlRDO02			25	25	25	25	25	25	25	25	25	25	25		
Software Controlled RDO#3	LCB#-NNN-Gen-MMM-SfwCtlRDO03			25	25	25	25	25	25	25	25	25	25	25		
Software Controlled RDO#4	LCB#-NNN-Gen-			25	25	25	25	25	25	25	25	25	25	25		

BACnet Generator Object list (Typical for each Unit)																
Object List	**Mapped Object List**	**Read/ Write**	**Object Type**	**Supply Device**	**Install Device**	**Power Device**	**Wire Device**	**Pgm Device**	**Alarmable**	**Alarm Limit**	**Alarm Type**	**Graphic**	**Trend**	**Com'd**	**Units**	**Description (acceptable value range)**
	MMM-SfwCtlRDO04															
Reserved for factory use	LCB#-NNN-Gen-MMM-RsvFacUse			25	25	25	25	25	25	25	25	25	25	25		
Genset Parameter Warning	LCB#-NNN-Gen-MMM-GensetParWrn			25	25	25	25	25	25	25	25	25	25	25		
Genset S/N mismatch Warning	LCB#-NNN-Gen-MMM-AAAAAA	R/W		25	25	25	25	25	25	25	25	25	25	25		Selected|Setpoint|p
Genset S/N mismatch Shutdown	LCB#-NNN-Gen-MMM-AAAAAA			25	25	25	25	25	25	25	25	25	25	25		
				25	25	25	25	25	25	25	25	25	25	25		
Protective Relay Overvoltage	LCB#-NNN-Gen-MMM-PttRlyOvrVtg	R/W		25	25	25	25	25	25	25	25	25	25	25		Switch gear applications only. Cannot be defined as gppy common fault or assigned as RDO, but can referenced in event stack/log in event stack/log.
Protective Relay Under Voltage	LCB#-NNN-Gen-MMM-PttRlyUdrVtg			25	25	25	25	25	25	25	25	25	25	25		
Protective Relay Overfrequency	LCB#-NNN-Gen-MMM-PttRlyOvrFrq			25	25	25	25	25	25	25	25	25	25	25		
Protective Relay Underfrequency	LCB#-NNN-Gen-MMM-PttRlyUdrFrq			25	25	25	25	25	25	25	25	25	25	25		
Protective Relay Reverse Power	LCB#-NNN-Gen-			25	25	25	25	25	25	25	25	25	25	25		

BACnet Generator Object list (Typical for each Unit)																
Object List	**Mapped Object List**	**Read/ Write**	**Object Type**	**Supply Device**	**Install Device**	**Power Device**	**Wire Device**	**Pgm Device**	**Alarmable**	**Alarm Limit**	**Alarm Type**	**Graphic**	**Trend**	**Com'd**	**Units**	**Description (acceptable value range)**
	MMM-PttRlyRvsPwr															
Protective Relay Over Power	LCB#-NNN-Gen-MMM-PttRlyOvrPwr			25	25	25	25	25	25	25	25	25	25	25		
Protective Relay Loss of Field	LCB#-NNN-Gen-MMM-PttRlyLossFld			25	25	25	25	25	25	25	25	25	25	25		
Protective Relay OvercurrentVr	LCB#-NNN-Gen-MMM-PttRlyOvrCur			25	25	25	25	25	25	25	25	25	25	25		
Reverse Power Shutdown	LCB#-NNN-Gen-MMM-RvsPwrSdn	R/W		25	25	25	25	25	25	25	25	25	25	25		Switchgearapplicationsonlygppy
Over Power Shutdown	LCB#-NNN-Gen-MMM-OvrPwrSdn			25	25	25	25	25	25	25	25	25	25	25		
Loss of Field Shutdown	LCB#-NNN-Gen-MMM-LossFldSdn			25	25	25	25	25	25	25	25	25	25	25		
Over Current Shutdown	LCB#-NNN-Gen-MMM-OvrCurSdn			25	25	25	25	25	25	25	25	25	25	25		
Common Protective Relay Output	LCB#-NNN-Gen-MMM-ComPttRlyO	R/W		25	25	25	25	25	25	25	25	25	25	25		Switchgearapplicationsonly.Cannotbedefinedascommonfault,butcanbeassignedasRDOandreferencedineventstack/log.
				25	25	25	25	25	25	25	25	25	25	25		
Fuel Valve Relay	LCB#-NNN-Gen-	R/W		25	25	25	25	25	25	25	25	25	25	25		Waukesha only.

BACnet Generator Object list (Typical for each Unit)																
Object List	**Mapped Object List**	**Read/ Write**	**Object Type**	**Supply Device**	**Install Device**	**Power Device**	**Wire Device**	**Pgm Device**	**Alarmable**	**Alarm Limit**	**Alarm Type**	**Graphic**	**Trend**	**Com'd**	**Units**	**Description (acceptable value range)**
	MMM-FuelVlvRly															
Pre Lube Relay	LCB#-NNN-Gen-MMM-PreLubeRly			25	25	25	25	25	25	25	25	25	25	25		
Air -Fuel Module Start	LCB#-NNN-Gen-MMM-AirFuelModSt			25	25	25	25	25	25	25	25	25	25	25		
Oil Temperature Loss of Signal	LCB#-NNN-Gen-MMM-OilTmpLossSgl			25	25	25	25	25	25	25	25	25	25	25		
High Oil Temperature Warning	LCB#-NNN-Gen-MMM-HiOilTmpWrn			25	25	25	25	25	25	25	25	25	25	25		
Intake Air Temperature Loss of Signal	LCB#-NNN-Gen-MMM-AirTmpLossSgl			25	25	25	25	25	25	25	25	25	25	25		
High Intake Air Temperature Warning	LCB#-NNN-Gen-MMM-HiIntAirTmWrn	R/W		25	25	25	25	25	25	25	25	25	25	25		Waukesha/MDEC/ADEC only.
High Intake Air Temperature Shutdown	LCB#-NNN-Gen-MMM-HiIntAirTmSdn	R/W		25	25	25	25	25	25	25	25	25	25	25		Waukesha only.
MDEC/ADEC Yellow Alarm	LCB#-NNN-Gen-MMM-MDECYellowAlm	R/W		25	25	25	25	25	25	25	25	25	25	25		MDEC/ADEC only.
MDEC/ADEC Red Alarm	LCB#-NNN-Gen-MMM-MDECR			25	25	25	25	25	25	25	25	25	25	25		

BACnet Generator Object list (Typical for each Unit)																
Object List	**Mapped Object List**	**Read/ Write**	**Object Type**	**Supply Device**	**Install Device**	**Power Device**	**Wire Device**	**Pgm Device**	**Alarmable**	**Alarm Limit**	**Alarm Type**	**Graphic**	**Trend**	**Com'd**	**Units**	**Description (acceptable value range)**
	edAlm															
MDEC/ADEC Block Heater Control	LCB#-NNN-Gen-MMM-MDEC_BHC			25	25	25	25	25	25	25	25	25	25	25		
Low Coolant Temperature Shutdown	LCB#-NNN-Gen-MMM-LoColTmpSdn			25	25	25	25	25	25	25	25	25	25	25		
MDEC/ADEC Load Shed Over Temperature	LCB#-NNN-Gen-MMM-MDECLdSdTmp			25	25	25	25	25	25	25	25	25	25	25		
Reserved For Future Use	LCB#-NNN-Gen-MMM-AAAAAA	R/W		25	25	25	25	25	25	25	25	25	25	25		
Air -Fuel Module Start	LCB#-NNN-Gen-MMM-AirFuelModSt	R/W		25	25	25	25	25	25	25	25	25	25	25		Waukesha only.
DeviceID	LCB#-NNN-Gen-MMM-DeviceID	R		25	25	25	25	25	25	25	25	25	25	25		Dec 550 DeviceID=20
Remapped Registers				25	25	25	25	25	25	25	25	25	25	25		
Emergency Stop	LCB#-NNN-Gen-MMM-EmeStop			25	25	25	25	25	25	25	25	25	25	25		
Overspeed	LCB#-NNN-Gen-MMM-Overspeed			25	25	25	25	25	25	25	25	25	25	25		
Overcrank	LCB#-NNN-Gen-MMM-Overcran			25	25	25	25	25	25	25	25	25	25	25		

BACnet Generator Object list (Typical for each Unit)																
Object List	**Mapped Object List**	**Read/ Write**	**Object Type**	**Supply Device**	**Install Device**	**Power Device**	**Wire Device**	**Pgm Device**	**Alarmable**	**Alarm Limit**	**Alarm Type**	**Graphic**	**Trend**	**Com'd**	**Units**	**Description (acceptable value range)**
	k															
High Coolant Temperature Shutdown	LCB#-NNN-Gen-MMM-HiColTmpSdn			25	25	25	25	25	25	25	25	25	25	25		
Oil Pressure Shutdown	LCB#-NNN-Gen-MMM-OilPrsSdn			25	25	25	25	25	25	25	25	25	25	25		
Low Coolant Temperature	**LCB#-NNN-Gen-MMM-LoColTmp**			25	25	25	25	25	25	25	25	25	25	25		
Low Fuel	LCB#-NNN-Gen-MMM-LowFuel			25	25	25	25	25	25	25	25	25	25	25		
High Coolant Temperature Warning	LCB#-NNN-Gen-MMM-HiColTmpWrn			25	25	25	25	25	25	25	25	25	25	25		
Oil PressureWarning	LCB#-NNN-Gen-MMM-OilPrsWrn			25	25	25	25	25	25	25	25	25	25	25		
Master Not In Auto	LCB#-NNN-Gen-MMM-MsrNotInAuto			25	25	25	25	25	25	25	25	25	25	25		
NFPA110 Fault	LCB#-NNN-Gen-MMM-NFPA110Fau			25	25	25	25	25	25	25	25	25	25	25		
Low Battery Voltage	LCB#-NNN-Gen-MMM-LoBttVtg			25	25	25	25	25	25	25	25	25	25	25		
High Battery Voltage	LCB#-NNN-			25	25	25	25	25	25	25	25	25	25	25		

BACnet Generator Object list (Typical for each Unit)																
Object List	**Mapped Object List**	**Read/ Write**	**Object Type**	**Supply Device**	**Install Device**	**Power Device**	**Wire Device**	**Pgm Device**	**Alarmable**	**Alarm Limit**	**Alarm Type**	**Graphic**	**Trend**	**Com'd**	**Units**	**Description (acceptable value range)**
	Gen-MMM-HiBttVtg															
Battery Charger Fault	LCB#-NNN-Gen-MMM-BttCgrFau			25	25	25	25	25	25	25	25	25	25	25		
System Ready	LCB#-NNN-Gen-MMM-SysReady			25	25	25	25	25	25	25	25	25	25	25		
Loss of ECM Comm	LCB#-NNN-Gen-MMM-LossOfECMCom			25	25	25	25	25	25	25	25	25	25	25		
No Oil Pressure Signal	LCB#-NNN-Gen-MMM-NoOilPrsSgl			25	25	25	25	25	25	25	25	25	25	25		
High Oil Temperature Shutdown	LCB#-NNN-Gen-MMM-HiOilTmpSdn			25	25	25	25	25	25	25	25	25	25	25		
No Coolant Temperature Signal	LCB#-NNN-Gen-MMM-NoColTmpSgl			25	25	25	25	25	25	25	25	25	25	25		
Low Coolant Level	LCB#-NNN-Gen-MMM-LoColLvl			25	25	25	25	25	25	25	25	25	25	25		
Speed Sensor Fault	LCB#-NNN-Gen-MMM-SpdSenFau			25	25	25	25	25	25	25	25	25	25	25		
Locked Rotor	LCB#-NNN-Gen-MMM-LockedRotor			25	25	25	25	25	25	25	25	25	25	25		

BACnet Generator Object list (Typical for each Unit)																
Object List	**Mapped Object List**	**Read/ Write**	**Object Type**	**Supply Device**	**Install Device**	**Power Device**	**Wire Device**	**Pgm Device**	**Alarmable**	**Alarm Limit**	**Alarm Type**	**Graphic**	**Trend**	**Com'd**	**Units**	**Description (acceptable value range)**
Master Switch Error	LCB#-NNN-Gen-MMM-MsrSwtErr			25	25	25	25	25	25	25	25	25	25	25		
Master Switch Open	LCB#-NNN-Gen-MMM-MsrSwtOpn			25	25	25	25	25	25	25	25	25	25	25		
Master Switch Off	LCB#-NNN-Gen-MMM-MsrSwtOff			25	25	25	25	25	25	25	25	25	25	25		
AC Sensing Loss	LCB#-NNN-Gen-MMM-ACSenLoss			25	25	25	25	25	25	25	25	25	25	25		
Over Voltage	LCB#-NNN-Gen-MMM-OverVoltage			25	25	25	25	25	25	25	25	25	25	25		
Under Voltage	LCB#-NNN-Gen-MMM-UnderVoltage			25	25	25	25	25	25	25	25	25	25	25		
Weak Battery	LCB#-NNN-Gen-MMM-WeakBattery			25	25	25	25	25	25	25	25	25	25	25		
Over Frequency	LCB#-NNN-Gen-MMM-OverFrequency			25	25	25	25	25	25	25	25	25	25	25		
Under Frequency	LCB#-NNN-Gen-MMM-UnderFrq			25	25	25	25	25	25	25	25	25	25	25		
Load Shed kW Overload	LCB#-NNN-Gen-			25	25	25	25	25	25	25	25	25	25	25		

BACnet Generator Object list (Typical for each Unit)																
Object List	**Mapped Object List**	**Read/ Write**	**Object Type**	**Supply Device**	**Install Device**	**Power Device**	**Wire Device**	**Pgm Device**	**Alarmable**	**Alarm Limit**	**Alarm Type**	**Graphic**	**Trend**	**Com'd**	**Units**	**Description (acceptable value range)**
	MMM-LdShedKwOvl															
Load Shed kW Under Frequency	LCB#-NNN-Gen-MMM-LdSdKwUdrFrq			25	25	25	25	25	25	25	25	25	25	25		
Over Current	LCB#-NNN-Gen-MMM-OverCurrent			25	25	25	25	25	25	25	25	25	25	25		
EPS Supplying Load	LCB#-NNN-Gen-MMM-EPSSupLd			25	25	25	25	25	25	25	25	25	25	25		
Internal Fault	LCB#-NNN-Gen-MMM-InternalFault			25	25	25	25	25	25	25	25	25	25	25		
Engine Cooldown Delay	LCB#-NNN-Gen-MMM-EnCldnDly			25	25	25	25	25	25	25	25	25	25	25		
Engine Start Delay	LCB#-NNN-Gen-MMM-EnStDly			25	25	25	25	25	25	25	25	25	25	25		
Starting Aid	LCB#-NNN-Gen-MMM-Starting Aid			25	25	25	25	25	25	25	25	25	25	25		
Generator Running	LCB#-NNN-Gen-MMM-GenRun			25	25	25	25	25	25	25	25	25	25	25		
Air Damper Control	LCB#-NNN-Gen-MMM-AirDmpCtl			25	25	25	25	25	25	25	25	25	25	25		

BACnet Generator Object list (Typical for each Unit)																
Object List	**Mapped Object List**	**Read/ Write**	**Object Type**	**Supply Device**	**Install Device**	**Power Device**	**Wire Device**	**Pgm Device**	**Alarmable**	**Alarm Limit**	**Alarm Type**	**Graphic**	**Trend**	**Com'd**	**Units**	**Description (acceptable value range)**
Ground Fault	LCB#-NNN-Gen-MMM-GroundFault			25	25	25	25	25	25	25	25	25	25	25		
EEPROM Write Failure	LCB#-NNN-Gen-MMM-EEPROMWrtFr			25	25	25	25	25	25	25	25	25	25	25		
Critical Overvoltage	LCB#-NNN-Gen-MMM-CriOvrVtg			25	25	25	25	25	25	25	25	25	25	25		
Alternator Protect Shutdown	LCB#-NNN-Gen-MMM-AltProtectSdn			25	25	25	25	25	25	25	25	25	25	25		
Air Damper Indicator	LCB#-NNN-Gen-MMM-AirDmpIdt			25	25	25	25	25	25	25	25	25	25	25		
Digital Input01	LCB#-NNN-Gen-MMM-DgtInput01			25	25	25	25	25	25	25	25	25	25	25		
Digital Input02	LCB#-NNN-Gen-MMM-DgtInput02			25	25	25	25	25	25	25	25	25	25	25		
Digital Input03	LCB#-NNN-Gen-MMM-DgtInput03			25	25	25	25	25	25	25	25	25	25	25		
Digital Input04	LCB#-NNN-Gen-MMM-DgtInput04			25	25	25	25	25	25	25	25	25	25	25		
Digital Input05	LCB#-NNN-Gen-			25	25	25	25	25	25	25	25	25	25	25		

BACnet Generator Object list (Typical for each Unit)																
Object List	**Mapped Object List**	**Read/ Write**	**Object Type**	**Supply Device**	**Install Device**	**Power Device**	**Wire Device**	**Pgm Device**	**Alarmable**	**Alarm Limit**	**Alarm Type**	**Graphic**	**Trend**	**Com'd**	**Units**	**Description (acceptable value range)**
	MMM-DgtInput 05															
Digital Input06	LCB#-NNN-Gen-MMM-DgtInput 06			25	25	25	25	25	25	25	25	25	25	25		
Digital Input07	LCB#-NNN-Gen-MMM-DgtInput 07			25	25	25	25	25	25	25	25	25	25	25		
Digital Input08	LCB#-NNN-Gen-MMM-DgtInput 08			25	25	25	25	25	25	25	25	25	25	25		
Digital Input09	LCB#-NNN-Gen-MMM-DgtInput 09			25	25	25	25	25	25	25	25	25	25	25		
Digital Input10	LCB#-NNN-Gen-MMM-DgtInput 10			25	25	25	25	25	25	25	25	25	25	25		
Digital Input11	LCB#-NNN-Gen-MMM-DgtInput 11			25	25	25	25	25	25	25	25	25	25	25		
Digital Input12	LCB#-NNN-Gen-MMM-DgtInput 12			25	25	25	25	25	25	25	25	25	25	25		
Digital Input13	LCB#-NNN-Gen-MMM-DgtInput 13			25	25	25	25	25	25	25	25	25	25	25		
Digital Input14	LCB#-NNN-Gen-MMM-DgtInput 14			25	25	25	25	25	25	25	25	25	25	25		

BACnet Generator Object list (Typical for each Unit)																
Object List	**Mapped Object List**	**Read/ Write**	**Object Type**	**Supply Device**	**Install Device**	**Power Device**	**Wire Device**	**Pgm Device**	**Alarmable**	**Alarm Limit**	**Alarm Type**	**Graphic**	**Trend**	**Com'd**	**Units**	**Description (acceptable value range)**
Digital Input15	LCB#-NNN-Gen-MMM-DgtInput15			25	25	25	25	25	25	25	25	25	25	25		
Digital Input16	LCB#-NNN-Gen-MMM-DgtInput16			25	25	25	25	25	25	25	25	25	25	25		
Digital Input17	LCB#-NNN-Gen-MMM-DgtInput17			25	25	25	25	25	25	25	25	25	25	25		
Digital Input18	LCB#-NNN-Gen-MMM-DgtInput18			25	25	25	25	25	25	25	25	25	25	25		
Digital Input19	LCB#-NNN-Gen-MMM-DgtInput19			25	25	25	25	25	25	25	25	25	25	25		
Digital Input20	LCB#-NNN-Gen-MMM-DgtInput20			25	25	25	25	25	25	25	25	25	25	25		
Digital Input21	LCB#-NNN-Gen-MMM-DgtInput21			25	25	25	25	25	25	25	25	25	25	25		
Analog Input01	LCB#-NNN-Gen-MMM-AnalogIn01			25	25	25	25	25	25	25	25	25	25	25		
Analog Input02	LCB#-NNN-Gen-MMM-AnalogIn02			25	25	25	25	25	25	25	25	25	25	25		
Analog Input03	LCB#-NNN-Gen-			25	25	25	25	25	25	25	25	25	25	25		

BACnet Generator Object list (Typical for each Unit)																
Object List	**Mapped Object List**	**Read/ Write**	**Object Type**	**Supply Device**	**Install Device**	**Power Device**	**Wire Device**	**Pgm Device**	**Alarmable**	**Alarm Limit**	**Alarm Type**	**Graphic**	**Trend**	**Com'd**	**Units**	**Description (acceptable value range)**
	MMM-AnalogIn03															
Analog Input04	LCB#-NNN-Gen-MMM-AnalogIn04			25	25	25	25	25	25	25	25	25	25	25		
Analog Input05	LCB#-NNN-Gen-MMM-AnalogIn05			25	25	25	25	25	25	25	25	25	25	25		
Analog Input06	LCB#-NNN-Gen-MMM-AnalogIn06			25	25	25	25	25	25	25	25	25	25	25		
Analog Input07	LCB#-NNN-Gen-MMM-AnalogIn07			25	25	25	25	25	25	25	25	25	25	25		
Defined Common Fault	LCB#-NNN-Gen-MMM-Defined ComFau			25	25	25	25	25	25	25	25	25	25	25		
Software Controlled RDO#1	LCB#-NNN-Gen-MMM-SfwCtlRDO01			25	25	25	25	25	25	25	25	25	25	25		
Software Controlled RDO#2	LCB#-NNN-Gen-MMM-SfwCtlRDO02			25	25	25	25	25	25	25	25	25	25	25		
Software Controlled RDO#3	LCB#-NNN-Gen-MMM-SfwCtlRDO03			25	25	25	25	25	25	25	25	25	25	25		
Software Controlled RDO#4	LCB#-NNN-Gen-MMM-SfwCtlRDO04			25	25	25	25	25	25	25	25	25	25	25		

BACnet Generator Object list (Typical for each Unit)																
Object List	**Mapped Object List**	**Read/ Write**	**Object Type**	**Supply Device**	**Install Device**	**Power Device**	**Wire Device**	**Pgm Device**	**Alarmable**	**Alarm Limit**	**Alarm Type**	**Graphic**	**Trend**	**Com'd**	**Units**	**Description (acceptable value range)**
System Event Code Table				25	25	25	25	25	25	25	25	25	25	25		
Emergency Stop	LCB#-NNN-Gen-MMM-EmeStp			25	25	25	25	25	25	25	25	25	25	25		
Overspeed	LCB#-NNN-Gen-MMM-Overspeed			25	25	25	25	25	25	25	25	25	25	25		
Overcrank	LCB#-NNN-Gen-MMM-Overcrank			25	25	25	25	25	25	25	25	25	25	25		
High Coolant Temperature Shutdown	LCB#-NNN-Gen-MMM-HiColTmpSdn			25	25	25	25	25	25	25	25	25	25	25		
Oil Pressure Shutdown	LCB#-NNN-Gen-MMM-OilPrsSdn			25	25	25	25	25	25	25	25	25	25	25		
Low Coolant Temperature	LCB#-NNN-Gen-MMM-LoColTmp			25	25	25	25	25	25	25	25	25	25	25		
Low Fuel	LCB#-NNN-Gen-MMM-LowFuel			25	25	25	25	25	25	25	25	25	25	25		
High Coolant Temperature Warning	LCB#-NNN-Gen-MMM-HiColTmpWrn			25	25	25	25	25	25	25	25	25	25	25		
Oil Pressure Warning	LCB#-NNN-Gen-MMM-OilPrsWrn			25	25	25	25	25	25	25	25	25	25	25		
Master Not In Auto	LCB#-NNN-			25	25	25	25	25	25	25	25	25	25	25		

BACnet Generator Object list (Typical for each Unit)																
Object List	**Mapped Object List**	**Read/ Write**	**Object Type**	**Supply Device**	**Install Device**	**Power Device**	**Wire Device**	**Pgm Device**	**Alarmable**	**Alarm Limit**	**Alarm Type**	**Graphic**	**Trend**	**Com'd**	**Units**	**Description (acceptable value range)**
	Gen-MMM-MsrNotInAuto															
NFPA110 Fault	LCB#-NNN-Gen-MMM-NFPA110Fau			25	25	25	25	25	25	25	25	25	25	25		
Low Battery Voltage	LCB#-NNN-Gen-MMM-LoBttVtg			25	25	25	25	25	25	25	25	25	25	25		
High Battery Voltage	LCB#-NNN-Gen-MMM-HiBttVtg			25	25	25	25	25	25	25	25	25	25	25		
Battery Charger Fault	LCB#-NNN-Gen-MMM-BttCgrFau			25	25	25	25	25	25	25	25	25	25	25		
System Ready	LCB#-NNN-Gen-MMM-SysReady			25	25	25	25	25	25	25	25	25	25	25		
Loss of ECM Comm	LCB#-NNN-Gen-MMM-LossOfECMCom			25	25	25	25	25	25	25	25	25	25	25		
No Oil Pressure Signal	LCB#-NNN-Gen-MMM-NoOilPrsSgl			25	25	25	25	25	25	25	25	25	25	25		
High Oil Temperature Shutdown	LCB#-NNN-Gen-MMM-HiOilTmpSdn			25	25	25	25	25	25	25	25	25	25	25		
No Coolant Temperature Signal	LCB#-NNN-Gen-MMM-NoColTmpSgl			25	25	25	25	25	25	25	25	25	25	25		

BACnet Generator Object list (Typical for each Unit)																
Object List	**Mapped Object List**	**Read/ Write**	**Object Type**	**Supply Device**	**Install Device**	**Power Device**	**Wire Device**	**Pgm Device**	**Alarmable**	**Alarm Limit**	**Alarm Type**	**Graphic**	**Trend**	**Com'd**	**Units**	**Description (acceptable value range)**
Low Coolant Level	LCB#-NNN-Gen-MMM-LoColLvl			25	25	25	25	25	25	25	25	25	25	25		
Speed Sensor Fault	LCB#-NNN-Gen-MMM-SpdSenFau			25	25	25	25	25	25	25	25	25	25	25		
Locked Rotor	LCB#-NNN-Gen-MMM-LockedRotor			25	25	25	25	25	25	25	25	25	25	25		
Master Switch Error	LCB#-NNN-Gen-MMM-MsrSwtError			25	25	25	25	25	25	25	25	25	25	25		
Master Switch Open	LCB#-NNN-Gen-MMM-MsrSwtOpen			25	25	25	25	25	25	25	25	25	25	25		
Master Switch Off	LCB#-NNN-Gen-MMM-MsrSwtOff			25	25	25	25	25	25	25	25	25	25	25		
AC Sensing Loss	LCB#-NNN-Gen-MMM-ACSenLoss			25	25	25	25	25	25	25	25	25	25	25		
Over Voltage	LCB#-NNN-Gen-MMM-OverVoltage			25	25	25	25	25	25	25	25	25	25	25		
Under Voltage	LCB#-NNN-Gen-MMM-UnderVoltage			25	25	25	25	25	25	25	25	25	25	25		
Weak Battery	LCB#-NNN-Gen-			25	25	25	25	25	25	25	25	25	25	25		

BACnet Generator Object list (Typical for each Unit)																
Object List	**Mapped Object List**	**Read/ Write**	**Object Type**	**Supply Device**	**Install Device**	**Power Device**	**Wire Device**	**Pgm Device**	**Alarmable**	**Alarm Limit**	**Alarm Type**	**Graphic**	**Trend**	**Com'd**	**Units**	**Description (acceptable value range)**
	MMM-WeakBattery															
Over Frequency	LCB#-NNN-Gen-MMM-OverFrequency			25	25	25	25	25	25	25	25	25	25	25		
Under Frequency	LCB#-NNN-Gen-MMM-UnderFrq			25	25	25	25	25	25	25	25	25	25	25		
Load Shed kW Overload	LCB#-NNN-Gen-MMM-LdShedKwOvl			25	25	25	25	25	25	25	25	25	25	25		
Load Shed kW Under Frequency	LCB#-NNN-Gen-MMM-LdSdKwUdrFrq			25	25	25	25	25	25	25	25	25	25	25		
Over Current	LCB#-NNN-Gen-MMM-OverCurrent			25	25	25	25	25	25	25	25	25	25	25		
EPS Supplying Load	LCB#-NNN-Gen-MMM-EPSSupLd			25	25	25	25	25	25	25	25	25	25	25		
Internal Fault	LCB#-NNN-Gen-MMM-InternalFault			25	25	25	25	25	25	25	25	25	25	25		
Engine Cooldown Delay	LCB#-NNN-Gen-MMM-EnCldnDly			25	25	25	25	25	25	25	25	25	25	25		
Engine Start Delay	LCB#-NNN-Gen-MMM-EnStDly			25	25	25	25	25	25	25	25	25	25	25		

BACnet Generator Object list (Typical for each Unit)																
Object List	**Mapped Object List**	**Read/ Write**	**Object Type**	**Supply Device**	**Install Device**	**Power Device**	**Wire Device**	**Pgm Device**	**Alarmable**	**Alarm Limit**	**Alarm Type**	**Graphic**	**Trend**	**Com'd**	**Units**	**Description (acceptable value range)**
Starting Aid	LCB#-NNN-Gen-MMM-Starting Aid			25	25	25	25	25	25	25	25	25	25	25		
Generator Running	LCB#-NNN-Gen-MMM-GenRun			25	25	25	25	25	25	25	25	25	25	25		
Air Damper Control	LCB#-NNN-Gen-MMM-AirDmpCtl			25	25	25	25	25	25	25	25	25	25	25		
Ground Fault	LCB#-NNN-Gen-MMM-GroundFault			25	25	25	25	25	25	25	25	25	25	25		
EEPROM Write Failure	LCB#-NNN-Gen-MMM-EEPROMWrtFr			25	25	25	25	25	25	25	25	25	25	25		
Critical Overvoltage	LCB#-NNN-Gen-MMM-CriOvrVtg			25	25	25	25	25	25	25	25	25	25	25		
Alternator Protect Shutdown	LCB#-NNN-Gen-MMM-AltProtectSdn			25	25	25	25	25	25	25	25	25	25	25		
Air Damper Indicator	LCB#-NNN-Gen-MMM-AirDmpIdt			25	25	25	25	25	25	25	25	25	25	25		
Digital Input01	LCB#-NNN-Gen-MMM-DgtInput01			25	25	25	25	25	25	25	25	25	25	25		
Digital Input02	LCB#-NNN-Gen-MMM-			25	25	25	25	25	25	25	25	25	25	25		

BACnet Generator Object list (Typical for each Unit)																
Object List	**Mapped Object List**	**Read/ Write**	**Object Type**	**Supply Device**	**Install Device**	**Power Device**	**Wire Device**	**Pgm Device**	**Alarmable**	**Alarm Limit**	**Alarm Type**	**Graphic**	**Trend**	**Com'd**	**Units**	**Description (acceptable value range)**
	DgtInput 02															
Digital Input03	LCB#-NNN-Gen-MMM-DgtInput 03			25	25	25	25	25	25	25	25	25	25	25		
Digital Input04	LCB#-NNN-Gen-MMM-DgtInput 04			25	25	25	25	25	25	25	25	25	25	25		
Digital Input05	LCB#-NNN-Gen-MMM-DgtInput 05			25	25	25	25	25	25	25	25	25	25	25		
Digital Input06	LCB#-NNN-Gen-MMM-DgtInput 06			25	25	25	25	25	25	25	25	25	25	25		
Digital Input07	LCB#-NNN-Gen-MMM-DgtInput 07			25	25	25	25	25	25	25	25	25	25	25		
Digital Input08	LCB#-NNN-Gen-MMM-DgtInput 08			25	25	25	25	25	25	25	25	25	25	25		
Digital Input09	LCB#-NNN-Gen-MMM-DgtInput 09			25	25	25	25	25	25	25	25	25	25	25		
Digital Input10	LCB#-NNN-Gen-MMM-DgtInput 10			25	25	25	25	25	25	25	25	25	25	25		
Digital Input11	LCB#-NNN-Gen-MMM-DgtInput 11			25	25	25	25	25	25	25	25	25	25	25		

BACnet Generator Object list (Typical for each Unit)																
Object List	**Mapped Object List**	**Read/ Write**	**Object Type**	**Supply Device**	**Install Device**	**Power Device**	**Wire Device**	**Pgm Device**	**Alarmable**	**Alarm Limit**	**Alarm Type**	**Graphic**	**Trend**	**Com'd**	**Units**	**Description (acceptable value range)**
Digital Input12	LCB#-NNN-Gen-MMM-DgtInput12			25	25	25	25	25	25	25	25	25	25	25		
Digital Input13	LCB#-NNN-Gen-MMM-DgtInput13			25	25	25	25	25	25	25	25	25	25	25		
Digital Input14	LCB#-NNN-Gen-MMM-DgtInput14			25	25	25	25	25	25	25	25	25	25	25		
Digital Input15	LCB#-NNN-Gen-MMM-DgtInput15			25	25	25	25	25	25	25	25	25	25	25		
Digital Input16	LCB#-NNN-Gen-MMM-DgtInput16			25	25	25	25	25	25	25	25	25	25	25		
Digital Input17	LCB#-NNN-Gen-MMM-DgtInput17			25	25	25	25	25	25	25	25	25	25	25		
Digital Input18	LCB#-NNN-Gen-MMM-DgtInput18			25	25	25	25	25	25	25	25	25	25	25		
Digital Input19	LCB#-NNN-Gen-MMM-DgtInput19			25	25	25	25	25	25	25	25	25	25	25		
Digital Input20	LCB#-NNN-Gen-MMM-DgtInput20			25	25	25	25	25	25	25	25	25	25	25		
Digital Input21	LCB#-NNN-Gen-			25	25	25	25	25	25	25	25	25	25	25		

BACnet Generator Object list (Typical for each Unit)																
Object List	**Mapped Object List**	**Read/ Write**	**Object Type**	**Supply Device**	**Install Device**	**Power Device**	**Wire Device**	**Pgm Device**	**Alarmable**	**Alarm Limit**	**Alarm Type**	**Graphic**	**Trend**	**Com'd**	**Units**	**Description (acceptable value range)**
	MMM-DgtInput21															
Analog Input01	LCB#-NNN-Gen-MMM-AnalogIn01			25	25	25	25	25	25	25	25	25	25	25		
Analog Input02	LCB#-NNN-Gen-MMM-AnalogIn02			25	25	25	25	25	25	25	25	25	25	25		
Analog Input03	LCB#-NNN-Gen-MMM-AnalogIn03			25	25	25	25	25	25	25	25	25	25	25		
AnalogInput04	LCB#-NNN-Gen-MMM-AnalogIn04			25	25	25	25	25	25	25	25	25	25	25		
Analog Input05	LCB#-NNN-Gen-MMM-AnalogIn05			25	25	25	25	25	25	25	25	25	25	25		
Analog Input06	LCB#-NNN-Gen-MMM-AnalogIn06			25	25	25	25	25	25	25	25	25	25	25		
Analog Input07	LCB#-NNN-Gen-MMM-AnalogIn07			25	25	25	25	25	25	25	25	25	25	25		
Defined Common Fault	LCB#-NNN-Gen-MMM-Defined ComFau			25	25	25	25	25	25	25	25	25	25	25		
Software Controlled RDO#1	LCB#-NNN-Gen-MMM-SfwCtlRDO01			25	25	25	25	25	25	25	25	25	25	25		

BACnet Generator Object list (Typical for each Unit)																
Object List	**Mapped Object List**	**Read/ Write**	**Object Type**	**Supply Device**	**Install Device**	**Power Device**	**Wire Device**	**Pgm Device**	**Alarmable**	**Alarm Limit**	**Alarm Type**	**Graphic**	**Trend**	**Com'd**	**Units**	**Description (acceptable value range)**
Software Controlled RDO#2	LCB#-NNN-Gen-MMM-SfwCtlRDO02			25	25	25	25	25	25	25	25	25	25	25		
Software Controlled RDO#3	LCB#-NNN-Gen-MMM-SfwCtlRDO03			25	25	25	25	25	25	25	25	25	25	25		
Software Controlled RDO#4	LCB#-NNN-Gen-MMM-SfwCtlRDO04			25	25	25	25	25	25	25	25	25	25	25		
Genset Parameter Warning	LCB#-NNN-Gen-MMM-GensetParWrn			25	25	25	25	25	25	25	25	25	25	25		
Genset S/N Mismatch Warning	LCB#-NNN-Gen-MMM-AAAAAA			25	25	25	25	25	25	25	25	25	25	25		
Genset S/N Mismatch Shutdown	LCB#-NNN-Gen-MMM-AAAAAA			25	25	25	25	25	25	25	25	25	25	25		
Protective Relay Overvoltage	LCB#-NNN-Gen-MMM-PttRlyOvrVtg			25	25	25	25	25	25	25	25	25	25	25		
Protective Relay UnderVoltage	LCB#-NNN-Gen-MMM-PttRlyUdrVtg			25	25	25	25	25	25	25	25	25	25	25		
Protective Relay Overfrequency	LCB#-NNN-Gen-MMM-PttRlyOvrFrq			25	25	25	25	25	25	25	25	25	25	25		
Protective Relay Underfrequenc	LCB#-NNN-Gen-			25	25	25	25	25	25	25	25	25	25	25		

BACnet Generator Object list (Typical for each Unit)																
Object List	**Mapped Object List**	**Read/ Write**	**Object Type**	**Supply Device**	**Install Device**	**Power Device**	**Wire Device**	**Pgm Device**	**Alarmable**	**Alarm Limit**	**Alarm Type**	**Graphic**	**Trend**	**Com'd**	**Units**	**Description (acceptable value range)**
y	MMM-PttRlyUdrFrq															
Protective Relay Reverse Power	LCB#-NNN-Gen-MMM-PttRlyRvsPwr			25	25	25	25	25	25	25	25	25	25	25		
Protective Relay Over Power	LCB#-NNN-Gen-MMM-PttRlyOvrPwr			25	25	25	25	25	25	25	25	25	25	25		
Protective Relay Loss of Field	LCB#-NNN-Gen-MMM-PttRlyLossFld			25	25	25	25	25	25	25	25	25	25	25		
Protective Relay Overcurrent Vr	LCB#-NNN-Gen-MMM-PttRlyOvrCur			25	25	25	25	25	25	25	25	25	25	25		
Reverse Power Shutdown	LCB#-NNN-Gen-MMM-RvsPwrSdn			25	25	25	25	25	25	25	25	25	25	25		
Over Power Shutdown	LCB#-NNN-Gen-MMM-OvrPwrSdn			25	25	25	25	25	25	25	25	25	25	25		
Loss of Field Shutdown	LCB#-NNN-Gen-MMM-LossFldSdn			25	25	25	25	25	25	25	25	25	25	25		
Over Current Shutdown	LCB#-NNN-Gen-MMM-OvrCurSdn			25	25	25	25	25	25	25	25	25	25	25		
Common Protective Relay Output	LCB#-NNN-Gen-MMM-ComPttRlyO			25	25	25	25	25	25	25	25	25	25	25		

BACnet Generator Object list (Typical for each Unit)																
Object List	**Mapped Object List**	**Read/ Write**	**Object Type**	**Supply Device**	**Install Device**	**Power Device**	**Wire Device**	**Pgm Device**	**Alarmable**	**Alarm Limit**	**Alarm Type**	**Graphic**	**Trend**	**Com'd**	**Units**	**Description (acceptable value range)**
In Synch	LCB#-NNN-Gen-MMM-InSynch			25	25	25	25	25	25	25	25	25	25	25		
Breaker Trip	LCB#-NNN-Gen-MMM-BreakerTrip			25	25	25	25	25	25	25	25	25	25	25		
Fuel Valve Relay	LCB#-NNN-Gen-MMM-FuelVlvRly			25	25	25	25	25	25	25	25	25	25	25		
Pre Lube Relay	LCB#-NNN-Gen-MMM-PreLubeRly			25	25	25	25	25	25	25	25	25	25	25		
Air-Fuel Module Start	LCB#-NNN-Gen-MMM-AirFuelModSt			25	25	25	25	25	25	25	25	25	25	25		
Oil Temperature Loss of Signal	LCB#-NNN-Gen-MMM-OilTmpLossSgl			25	25	25	25	25	25	25	25	25	25	25		
High Oil Temperature Warning	LCB#-NNN-Gen-MMM-HiOilTmpWrn			25	25	25	25	25	25	25	25	25	25	25		
Intake Air Temperature Loss of Signal	LCB#-NNN-Gen-MMM-AirTmpLossSgl			25	25	25	25	25	25	25	25	25	25	25		
High Intake Air Temperature Warning	LCB#-NNN-Gen-MMM-HiIntAirTmWrn			25	25	25	25	25	25	25	25	25	25	25		
High Intake Air Temperature Shutdown	LCB#-NNN-Gen-MMM-			25	25	25	25	25	25	25	25	25	25	25		

BACnet Generator Object list (Typical for each Unit)																
Object List	**Mapped Object List**	**Read/ Write**	**Object Type**	**Supply Device**	**Install Device**	**Power Device**	**Wire Device**	**Pgm Device**	**Alarmable**	**Alarm Limit**	**Alarm Type**	**Graphic**	**Trend**	**Com'd**	**Units**	**Description (acceptable value range)**
	HiIntAir TmSdn															
MDEC/ADEC Yellow Alarm	LCB#-NNN-Gen-MMM-MDECYellowAlm			25	25	25	25	25	25	25	25	25	25	25		
MDEC/ADEC Red Alarm	LCB#-NNN-Gen-MMM-MDECRedAlm			25	25	25	25	25	25	25	25	25	25	25		
MDEC/ADEC Block Heater Control	LCB#-NNN-Gen-MMM-MDEC_BHC			25	25	25	25	25	25	25	25	25	25	25		
Low Coolant Temperature Shutdown	LCB#-NNN-Gen-MMM-LoColTmpSdn			25	25	25	25	25	25	25	25	25	25	25		
MDEC/ADEC Load Shed Over Temperature	LCB#-NNN-Gen-MMM-MDECLdSdTmp			25	25	25	25	25	25	25	25	25	25	25		
Reserved For Future Use	LCB#-NNN-Gen-MMM-AAAAAA			25	25	25	25	25	25	25	25	25	25	25		
Air -Fuel Module Start	LCB#-NNN-Gen-MMM-DeviceID			25	25	25	25	25	25	25	25	25	25	25		
Digital Auxiliary Input Functions				25	25	25	25	25	25	25	25	25	25	25		
Warning	LCB#-NNN-Gen-MMM-Warning			25	25	25	25	25	25	25	25	25	25	25		
Shutdown Type A	LCB#-NNN-			25	25	25	25	25	25	25	25	25	25	25		

BACnet Generator Object list (Typical for each Unit)																
Object List	**Mapped Object List**	**Read/ Write**	**Object Type**	**Supply Device**	**Install Device**	**Power Device**	**Wire Device**	**Pgm Device**	**Alarmable**	**Alarm Limit**	**Alarm Type**	**Graphic**	**Trend**	**Com'd**	**Units**	**Description (acceptable value range)**
	Gen-MMM-ShutdownTypeA															
Shutdown Type B	LCB#-NNN-Gen-MMM-ShutdownTypeB			25	25	25	25	25	25	25	25	25	25	25		
Voltage Raise	LCB#-NNN-Gen-MMM-VoltageRaise			25	25	25	25	25	25	25	25	25	25	25		
Voltage Lower	LCB#-NNN-Gen-MMM-VoltageLower			25	25	25	25	25	25	25	25	25	25	25		
VAR PF Mode	LCB#-NNN-Gen-MMM-VARPF Mode			25	25	25	25	25	25	25	25	25	25	25		
Remote Shutdown	LCB#-NNN-Gen-MMM-RemSdn			25	25	25	25	25	25	25	25	25	25	25		
Remote Reset	LCB#-NNN-Gen-MMM-RemRst			25	25	25	25	25	25	25	25	25	25	25		
Air Damper	LCB#-NNN-Gen-MMM-AirDamper			25	25	25	25	25	25	25	25	25	25	25		
Low Fuel Warning	LCB#-NNN-Gen-MMM-LoFuelWrn			25	25	25	25	25	25	25	25	25	25	25		
Field Over Volts	LCB#-NNN-Gen-MMM-FldOvrVtg			25	25	25	25	25	25	25	25	25	25	25		

BACnet Generator Object list (Typical for each Unit)																
Object List	**Mapped Object List**	**Read/ Write**	**Object Type**	**Supply Device**	**Install Device**	**Power Device**	**Wire Device**	**Pgm Device**	**Alarmable**	**Alarm Limit**	**Alarm Type**	**Graphic**	**Trend**	**Com'd**	**Units**	**Description (acceptable value range)**
Idle Mode	LCB#-NNN-Gen-MMM-IdleMode			25	25	25	25	25	25	25	25	25	25	25		ECM only
Battle Switch	LCB#-NNN-Gen-MMM-BattleSwitch			25	25	25	25	25	25	25	25	25	25	25		
Ground Fault	LCB#-NNN-Gen-MMM-GroundFault			25	25	25	25	25	25	25	25	25	25	25		
Bat Chgr Fault	LCB#-NNN-Gen-MMM-BttCgrFau			25	25	25	25	25	25	25	25	25	25	25		
High Oil Temperature	LCB#-NNN-Gen-MMM-HiOilTmp			25	25	25	25	25	25	25	25	25	25	25		
Low Coolant Lvl	LCB#-NNN-Gen-MMM-LoColLvl			25	25	25	25	25	25	25	25	25	25	25		
Low Coolant Temperature	LCB#-NNN-Gen-MMM-LoColTmp			25	25	25	25	25	25	25	25	25	25	25		ECM only (not user-assignable)
Breaker Closed	LCB#-NNN-Gen-MMM-BreakerClosed			25	25	25	25	25	25	25	25	25	25	25		(not user-assignable)
Enable Synch	LCB#-NNN-Gen-MMM-EnableSynch			25	25	25	25	25	25	25	25	25	25	25		(not user-assignable)
AFM Shutdown	LCB#-NNN-Gen-			25	25	25	25	25	25	25	25	25	25	25		Waukesha only (not user-assignable)

BACnet Generator Object list (Typical for each Unit)																
Object List	**Mapped Object List**	**Read/ Write**	**Object Type**	**Supply Device**	**Install Device**	**Power Device**	**Wire Device**	**Pgm Device**	**Alarmable**	**Alarm Limit**	**Alarm Type**	**Graphic**	**Trend**	**Com'd**	**Units**	**Description (acceptable value range)**
	MMM-AFMShutdown															
Knock Shutdown	LCB#-NNN-Gen-MMM-KnockShutdown			25	25	25	25	25	25	25	25	25	25	25		Waukesha only (not user-assignable)
Deton Warning	LCB#-NNN-Gen-MMM-DetonWarning			25	25	25	25	25	25	25	25	25	25	25		Waukesha only (not user-assignable)
Deton Shutdown	LCB#-NNN-Gen-MMM-DetonShutdown			25	25	25	25	25	25	25	25	25	25	25		Waukesha only (not user-assignable)
Low Fuel Shutdown	LCB#-NNN-Gen-MMM-LoFuelSdn			25	25	25	25	25	25	25	25	25	25	25		(not user-assignable)
Power Monitor Modbus Registers				25	25	25	25	25	25	25	25	25	25	25		
System Time	LCB#-NNN-Gen-MMM-SystemTime	R		25	25	25	25	25	25	25	25	25	25	25		
Day of Week	LCB#-NNN-Gen-MMM-DayofWeek	R		25	25	25	25	25	25	25	25	25	25	25		
Month	LCB#-NNN-Gen-MMM-Month	R		25	25	25	25	25	25	25	25	25	25	25		1-12
Day	LCB#-NNN-Gen-MMM-Day	R		25	25	25	25	25	25	25	25	25	25	25		1-31
Year	LCB#-NNN-Gen-MMM-	R		25	25	25	25	25	25	25	25	25	25	25		

BACnet Generator Object list (Typical for each Unit)																
Object List	**Mapped Object List**	**Read/ Write**	**Object Type**	**Supply Device**	**Install Device**	**Power Device**	**Wire Device**	**Pgm Device**	**Alarmable**	**Alarm Limit**	**Alarm Type**	**Graphic**	**Trend**	**Com'd**	**Units**	**Description (acceptable value range)**
	Year															
Week of Month	LCB#-NNN-Gen-MMM-Weekof Month	R		25	25	25	25	25	25	25	25	25	25	25		
Voltage L1--L2	LCB#-NNN-Gen-MMM-VtgL1L2	R	AV	25	25	25	25	25	25	25	25	25	25	25	V	volts
Voltage L2--L3	LCB#-NNN-Gen-MMM-VtgL2L3	R	AV	25	25	25	25	25	25	25	25	25	25	25	V	volts
Voltage L3--L1	LCB#-NNN-Gen-MMM-VtgL3L1	R	AV	25	25	25	25	25	25	25	25	25	25	25	V	volts
Frequency	LCB#-NNN-Gen-MMM-Frequency	R	AV	25	25	25	25	25	25	25	25	25	25	25	dHz	Hz * 10
Voltage L1--L0	LCB#-NNN-Gen-MMM-VtgL1L0	R	AV	25	25	25	25	25	25	25	25	25	25	25	V	volts
Voltage L2--L0	LCB#-NNN-Gen-MMM-VtgL2L0	R	AV	25	25	25	25	25	25	25	25	25	25	25	V	volts
Voltage L3--L0	LCB#-NNN-Gen-MMM-VtgL3L0	R	AV	25	25	25	25	25	25	25	25	25	25	25	V	volts
Alert Code	LCB#-NNN-Gen-MMM-AlertCode	R	AV	25	25	25	25	25	25	25	25	25	25	25		Alert Code
Analog Input #1 Percentage	LCB#-NNN-Gen-MMM-AnaIn1Pct	R	AV	25	25	25	25	25	25	25	25	25	25	25		% * 10

BACnet Generator Object list (Typical for each Unit)

Object List	Mapped Object List	Read/ Write	Object Type	Supply Device	Install Device	Power Device	Wire Device	Pgm Device	Alarmable	Alarm Limit	Alarm Type	Graphic	Trend	Com'd	Units	Description (acceptable value range)
Analog Input #2 Percentage	LCB#-NNN-Gen-MMM-AnaIn2Pct	R	AV	25	25	25	25	25	25	25	25	25	25	25		% * 10
Power Supply Voltage	LCB#-NNN-Gen-MMM-PwrSupVlg	R	AV	25	25	25	25	25	25	25	25	25	25	25	dV	VDC * 10
L1 Current	LCB#-NNN-Gen-MMM-L1Current	R	AV	25	25	25	25	25	25	25	25	25	25	25	A	amps
L2 Current	LCB#-NNN-Gen-MMM-L2Current	R	AV	25	25	25	25	25	25	25	25	25	25	25	A	amps
L3 Current	LCB#-NNN-Gen-MMM-L3Current	R	AV	25	25	25	25	25	25	25	25	25	25	25	A	amps
Power Factor	LCB#-NNN-Gen-MMM-PowerFactor	R	AV	25	25	25	25	25	25	25	25	25	25	25	cPF	* 100
Total Real Power	LCB#-NNN-Gen-MMM-TotRealPwr	R	AV	25	25	25	25	25	25	25	25	25	25	25	kW	kW
Total Imaginary Power	LCB#-NNN-Gen-MMM-TotImaPwr	R	AV	25	25	25	25	25	25	25	25	25	25	25	kvar	kVAR
PF Lead/Lag	LCB#-NNN-Gen-MMM-PFLeadLag	R	BV	25	25	25	25	25	25	25	25	25	25	25		0: 0 = leading; 1 = lagging
System Status	LCB#-NNN-Gen-	R		25	25	25	25	25	25	25	25	25	25	25		0--1: Switch Position (00=off; 01=Normal; 10=Emerg; 11=Undefined);

BACnet Generator Object list (Typical for each Unit)																
Object List	**Mapped Object List**	**Read/ Write**	**Object Type**	**Supply Device**	**Install Device**	**Power Device**	**Wire Device**	**Pgm Device**	**Alarmable**	**Alarm Limit**	**Alarm Type**	**Graphic**	**Trend**	**Com'd**	**Units**	**Description (acceptable value range)**
	MMM-SystemStatus															2--3: Contactor Position (00=off; 01=Normal; 10=Emerg; 11=Undefined); 4--5: Program Mode (00=off; 01=Remote; 10=Local; 11=Undefined); 6: Test Mode Timed; 7: Test Mode Active; 8--15: Unused
Aux 1 Delay Time	LCB#-NNN-Gen-MMM-Aux1DlyTime	R	AV	25	25	25	25	25	25	25	25	25	25	25	s	sec.
Aux 2 Delay Time	LCB#-NNN-Gen-MMM-Aux2DlyTime	R	AV	25	25	25	25	25	25	25	25	25	25	25	s	sec.
Aux 3 Delay Time	LCB#-NNN-Gen-MMM-Aux3DlyTime	R	AV	25	25	25	25	25	25	25	25	25	25	25	s	sec.
Aux 4 Delay Time	LCB#-NNN-Gen-MMM-Aux4DlyTime	R	AV	25	25	25	25	25	25	25	25	25	25	25	s	sec.
Aux 5 Delay Time	LCB#-NNN-Gen-MMM-Aux5DlyTime	R	AV	25	25	25	25	25	25	25	25	25	25	25	s	sec.
Aux 6 Delay Time	LCB#-NNN-Gen-MMM-Aux6DlyTime	R	AV	25	25	25	25	25	25	25	25	25	25	25	s	sec.
System Voltage	LCB#-NNN-Gen-MMM-SystemVoltage	R	AV	25	25	25	25	25	25	25	25	25	25	25	V	
System Frequency	LCB#-NNN-Gen-MMM-SystemFrq	R	AV	25	25	25	25	25	25	25	25	25	25	25	Hz	

BACnet Generator Object list (Typical for each Unit)																
Object List	**Mapped Object List**	**Read/ Write**	**Object Type**	**Supply Device**	**Install Device**	**Power Device**	**Wire Device**	**Pgm Device**	**Alarmable**	**Alarm Limit**	**Alarm Type**	**Graphic**	**Trend**	**Com'd**	**Units**	**Description (acceptable value range)**
ATS Rating	LCB#-NNN-Gen-MMM-ATSRating	R		25	25	25	25	25	25	25	25	25	25	25		
Connection	LCB#-NNN-Gen-MMM-Connection	R		25	25	25	25	25	25	25	25	25	25	25		0: 0=wye; 1=delta; 1: 0=single phase; 1=three phase
Time in Normal	LCB#-NNN-Gen-MMM-TimeInNormal	R		25	25	25	25	25	25	25	25	25	25	25		hours*10
Time in Off	LCB#-NNN-Gen-MMM-TimeInOff	R		25	25	25	25	25	25	25	25	25	25	25		hours*10
Time in Emergency	LCB#-NNN-Gen-MMM-TimeInEme	R		25	25	25	25	25	25	25	25	25	25	25		hours*10
Shutdown#1 Code	LCB#-NNN-Gen-MMM-Sdn1Code	R		25	25	25	25	25	25	25	25	25	25	25		code
Shutdown#1 Month	LCB#-NNN-Gen-MMM-Sdn1Month	R		25	25	25	25	25	25	25	25	25	25	25		1--12
Shutdown#1 Day	LCB#-NNN-Gen-MMM-Sdn1Day	R		25	25	25	25	25	25	25	25	25	25	25		1--31
Shutdown#1 Year	LCB#-NNN-Gen-MMM-Sdn1Year	R		25	25	25	25	25	25	25	25	25	25	25		
Shutdown#2 Code	LCB#-NNN-Gen-MMM-	R		25	25	25	25	25	25	25	25	25	25	25		code

BACnet Generator Object list (Typical for each Unit)																
Object List	**Mapped Object List**	**Read/ Write**	**Object Type**	**Supply Device**	**Install Device**	**Power Device**	**Wire Device**	**Pgm Device**	**Alarmable**	**Alarm Limit**	**Alarm Type**	**Graphic**	**Trend**	**Com'd**	**Units**	**Description (acceptable value range)**
	Sdn2Code															
Shutdown#2 Month	LCB#-NNN-Gen-MMM-Sdn2Month	R		25	25	25	25	25	25	25	25	25	25	25		1--12
Shutdown#2 Day	LCB#-NNN-Gen-MMM-Sdn2Day	R		25	25	25	25	25	25	25	25	25	25	25		1--31
Shutdown#2 Year	LCB#-NNN-Gen-MMM-Sdn2Year	R		25	25	25	25	25	25	25	25	25	25	25		
Shutdown#3 Code	LCB#-NNN-Gen-MMM-Sdn3Code	R		25	25	25	25	25	25	25	25	25	25	25		code
Shutdown#3 Month	LCB#-NNN-Gen-MMM-Sdn3Month	R		25	25	25	25	25	25	25	25	25	25	25		1--12
Shutdown#3 Day	LCB#-NNN-Gen-MMM-Sdn3Day	R		25	25	25	25	25	25	25	25	25	25	25		1--31
Shutdown#3 Year	LCB#-NNN-Gen-MMM-Sdn3Year	R		25	25	25	25	25	25	25	25	25	25	25		
Shutdown#4 Code	LCB#-NNN-Gen-MMM-Sdn4Code	R		25	25	25	25	25	25	25	25	25	25	25		code
Shutdown#4 Month	LCB#-NNN-Gen-MMM-Sdn4Month	R		25	25	25	25	25	25	25	25	25	25	25		1--12
Shutdown#4 Day	LCB#-NNN-	R		25	25	25	25	25	25	25	25	25	25	25		1--31

BACnet Generator Object list (Typical for each Unit)																
Object List	**Mapped Object List**	**Read/ Write**	**Object Type**	**Supply Device**	**Install Device**	**Power Device**	**Wire Device**	**Pgm Device**	**Alarmable**	**Alarm Limit**	**Alarm Type**	**Graphic**	**Trend**	**Com'd**	**Units**	**Description (acceptable value range)**
	Gen-MMM-Sdn4Day															
Shutdown #4 Year	LCB#-NNN-Gen-MMM-Sdn4Year	R		25	25	25	25	25	25	25	25	25	25	25		
Designation	LCB#-NNN-Gen-MMM-Designation	R		25	25	25	25	25	25	25	25	25	25	25		9 chars, 1 per byte, first char = LSB, last byte ignored
Load Description	LCB#-NNN-Gen-MMM-LoadDes	R		25	25	25	25	25	25	25	25	25	25	25		20 chars, 1 per byte, first char = LSB
Location	LCB#-NNN-Gen-MMMLocation	R		25	25	25	25	25	25	25	25	25	25	25		20 chars, 1 per byte, first char = LSB
Model No.	LCB#-NNN-Gen-MMM-ModelNum	R		25	25	25	25	25	25	25	25	25	25	25		26 chars, 1 per byte, first char = LSB
Spec. No.	LCB#-NNN-Gen-MMM-SpecNum	R		25	25	25	25	25	25	25	25	25	25	25		16 chars, 1 per byte, first char = LSB
Serial No.	LCB#-NNN-Gen-MMM-SerialNum	R		25	25	25	25	25	25	25	25	25	25	25		6 chars, 1 per byte, first char = LSB
Controller Serial No.	LCB#-NNN-Gen-MMM-CtlSrlNum	R		25	25	25	25	25	25	25	25	25	25	25		6 chars, 1 per byte, first char = LSB
Analog Input #1 Description	LCB#-NNN-Gen-MMM-AnaIn1Des	R		25	25	25	25	25	25	25	25	25	25	25		20 chars, 1 per byte, first char = LSB

BACnet Generator Object list (Typical for each Unit)																
Object List	**Mapped Object List**	**Read/ Write**	**Object Type**	**Supply Device**	**Install Device**	**Power Device**	**Wire Device**	**Pgm Device**	**Alarmable**	**Alarm Limit**	**Alarm Type**	**Graphic**	**Trend**	**Com'd**	**Units**	**Description (acceptable value range)**
Analog Input #2 Description	LCB#-NNN-Gen-MMM-AnaIn2Des	R		25	25	25	25	25	25	25	25	25	25	25		20 chars, 1 per byte, first char = LSB
Auxiliary 1 Description	LCB#-NNN-Gen-MMM-Aux1Des	R		25	25	25	25	25	25	25	25	25	25	25		20 chars, 1 per byte, first char = LSB
Auxiliary 2 Description	LCB#-NNN-Gen-MMM-Aux2Des	R		25	25	25	25	25	25	25	25	25	25	25		20 chars, 1 per byte, first char = LSB
Auxiliary 3 Description	LCB#-NNN-Gen-MMM-Aux3Des	R		25	25	25	25	25	25	25	25	25	25	25		20 chars, 1 per byte, first char = LSB
Auxiliary 4 Description	LCB#-NNN-Gen-MMM-Aux4Des	R		25	25	25	25	25	25	25	25	25	25	25		20 chars, 1 per byte, first char = LSB
Auxiliary 5 Description	LCB#-NNN-Gen-MMM-Aux5Des	R		25	25	25	25	25	25	25	25	25	25	25		20 chars, 1 per byte, first char = LSB
Auxiliary 6 Description	LCB#-NNN-Gen-MMM-Aux6Des	R		25	25	25	25	25	25	25	25	25	25	25		20 chars, 1 per byte, first char = LSB
Timed Run Time	LCB#-NNN-Gen-MMM-TimedRunTime	R/W	AV	25	25	25	25	25	25	25	25	25	25	25	min	MINUT25
Alert Codes				25	25	25	25	25	25	25	25	25	25	25		
Auxiliary1	LCB#-NNN-Gen-MMM-Auxiliary1			25	25	25	25	25	25	25	25	25	25	25		
Auxiliary2	LCB#-NNN-Gen-MMM-Auxiliary2			25	25	25	25	25	25	25	25	25	25	25		

BACnet Generator Object list (Typical for each Unit)																
Object List	**Mapped Object List**	**Read/ Write**	**Object Type**	**Supply Device**	**Install Device**	**Power Device**	**Wire Device**	**Pgm Device**	**Alarmable**	**Alarm Limit**	**Alarm Type**	**Graphic**	**Trend**	**Com'd**	**Units**	**Description (acceptable value range)**
Auxiliary3	LCB#-NNN-Gen-MMM-Auxiliary3			25	25	25	25	25	25	25	25	25	25	25		
Auxiliary4	LCB#-NNN-Gen-MMM-Auxiliary4			25	25	25	25	25	25	25	25	25	25	25		
Auxiliary5	LCB#-NNN-Gen-MMM-Auxiliary5			25	25	25	25	25	25	25	25	25	25	25		
Auxiliary6	LCB#-NNN-Gen-MMM-Auxiliary6			25	25	25	25	25	25	25	25	25	25	25		
Test Mode Active	LCB#-NNN-Gen-MMM-TestModeAct			25	25	25	25	25	25	25	25	25	25	25		
Internal Error	LCB#-NNN-Gen-MMM-InternalError			25	25	25	25	25	25	25	25	25	25	25		
System Ready	LCB#-NNN-Gen-MMM-SystemReady			25	25	25	25	25	25	25	25	25	25	25		
Power Down Error	LCB#-NNN-Gen-MMM-PwrDownError			25	25	25	25	25	25	25	25	25	25	25		
Fuel Leak Detection				25	25	25	25	25	25	25	25	25	25	25		
System				25	25	25	25	25	25	25	25	25	25	25		
1 Printer out of Paper	LCB#-NNN-FDet-MMM-			25	25	25	25	25	25	25	25	25	25	25		

BACnet Generator Object list (Typical for each Unit)																
Object List	**Mapped Object List**	**Read/ Write**	**Object Type**	**Supply Device**	**Install Device**	**Power Device**	**Wire Device**	**Pgm Device**	**Alarmable**	**Alarm Limit**	**Alarm Type**	**Graphic**	**Trend**	**Com'd**	**Units**	**Description (acceptable value range)**
	SysNoPaper															
2 Printer Error	LCB#-NNN-FDet-MMM-SysPrintErr			25	25	25	25	25	25	25	25	25	25	25		
3 EEPROM Configuration Error	LCB#-NNN-FDet-MMM-SysEEPROMErr			25	25	25	25	25	25	25	25	25	25	25		
4 Battery Off	LCB#-NNN-FDet-MMM-SysBttOff			25	25	25	25	25	25	25	25	25	25	25		
5 Too Many Tanks	LCB#-NNN-FDet-MMM-SysOvrTnkNum			25	25	25	25	25	25	25	25	25	25	25		
6 System Security Warning	LCB#-NNN-FDet-MMM-SysSctWrn			25	25	25	25	25	25	25	25	25	25	25		
7 ROM Revision Warning	LCB#-NNN-FDet-MMM-SysROMRevWrn			25	25	25	25	25	25	25	25	25	25	25		
8 Remote Display Communications Error	LCB#-NNN-FDet-MMM-SysRemDspErr			25	25	25	25	25	25	25	25	25	25	25		
9 Autodial Error	LCB#-NNN-FDet-MMM-SysAtdErr			25	25	25	25	25	25	25	25	25	25	25		
10 Software Module Warning	LCB#-NNN-FDet-MMM-SysSfwMdWrn			25	25	25	25	25	25	25	25	25	25	25		

BACnet Generator Object list (Typical for each Unit)																
Object List	**Mapped Object List**	**Read/ Write**	**Object Type**	**Supply Device**	**Install Device**	**Power Device**	**Wire Device**	**Pgm Device**	**Alarmable**	**Alarm Limit**	**Alarm Type**	**Graphic**	**Trend**	**Com'd**	**Units**	**Description (acceptable value range)**
11 Tank Test Shutdown Warning	LCB#-NNN-FDet-MMM-SysTnkTsSdn			25	25	25	25	25	25	25	25	25	25	25		
12 Protective Cover Alarm	LCB#-NNN-FDet-MMM-SysPttCovrAlm			25	25	25	25	25	25	25	25	25	25	25		
13 BIR Shift Close Pending	LCB#-NNN-FDet-MMM-SysShiftCls			25	25	25	25	25	25	25	25	25	25	25		
14 BIR Daily Close Pending	LCB#-NNN-FDet-MMM-SysDayCls			25	25	25	25	25	25	25	25	25	25	25		
15 PC (H8) Revision Warning	LCB#-NNN-FDet-MMM-SysPCRevWrn			25	25	25	25	25	25	25	25	25	25	25		
16 System Self Test Error	LCB#-NNN-FDet-MMM-SysTsErr			25	25	25	25	25	25	25	25	25	25	25		
17 System Clock Incorrect Warning	LCB#-NNN-FDet-MMM-SysClkErrWrn			25	25	25	25	25	25	25	25	25	25	25		
18 System Device Poll Timeout	LCB#-NNN-FDet-MMM-SysDevTo			25	25	25	25	25	25	25	25	25	25	25		
Tank				25	25	25	25	25	25	25	25	25	25	25		
1 Tank Setup Data Warning	LCB#-NNN-FDet-MMM-TnkStuWrn			25	25	25	25	25	25	25	25	25	25	25		

BACnet Generator Object list (Typical for each Unit)																
Object List	**Mapped Object List**	**Read/ Write**	**Object Type**	**Supply Device**	**Install Device**	**Power Device**	**Wire Device**	**Pgm Device**	**Alarmable**	**Alarm Limit**	**Alarm Type**	**Graphic**	**Trend**	**Com'd**	**Units**	**Description (acceptable value range)**
2 Tank Leak Alarm	LCB#-NNN-FDet-MMM-TnkLeakAlm			25	25	25	25	25	25	25	25	25	25	25		
3 Tank High Water Alarm	LCB#-NNN-FDet-MMM-TnkHiWtrAlm			25	25	25	25	25	25	25	25	25	25	25		
4 Tank Overfill Alarm	LCB#-NNN-FDet-MMM-TnkOvrFilAlm			25	25	25	25	25	25	25	25	25	25	25		
5 Tank Low Product Alarm	LCB#-NNN-FDet-MMM-TnkLoPdtAlm			25	25	25	25	25	25	25	25	25	25	25		
6 Tank Sudden Loss Alarm	LCB#-NNN-FDet-MMM-TnkLossAlm			25	25	25	25	25	25	25	25	25	25	25		
7 Tank High Product Alarm	LCB#-NNN-FDet-MMM-TnkHiPdtAlm			25	25	25	25	25	25	25	25	25	25	25		
8 Tank Invalid Fuel Level Alarm	LCB#-NNN-FDet-MMM-TnkLvlErrAlm			25	25	25	25	25	25	25	25	25	25	25		
9 Tank Probe Out Alarm	LCB#-NNN-FDet-MMM-TnkPrbOutAlm			25	25	25	25	25	25	25	25	25	25	25		
10 Tank High Water Warning	LCB#-NNN-FDet-MMM-TnkHiWtrWrn			25	25	25	25	25	25	25	25	25	25	25		
11 Tank Delivery Needed	LCB#-NNN-FDet-			25	25	25	25	25	25	25	25	25	25	25		

BACnet Generator Object list (Typical for each Unit)																
Object List	**Mapped Object List**	**Read/ Write**	**Object Type**	**Supply Device**	**Install Device**	**Power Device**	**Wire Device**	**Pgm Device**	**Alarmable**	**Alarm Limit**	**Alarm Type**	**Graphic**	**Trend**	**Com'd**	**Units**	**Description (acceptable value range)**
Warning	MMM-TnkDelNeedWrn															
12 Tank Maximum Product Alarm	LCB#-NNN-FDet-MMM-TnkMaxPdtAlm			25	25	25	25	25	25	25	25	25	25	25		
13 Tank Gross Leak Test Fail Alarm	LCB#-NNN-FDet-MMM-TnkGroLeakFai			25	25	25	25	25	25	25	25	25	25	25		
14 Tank Periodic Leak Test Fail Alarm	LCB#-NNN-FDet-MMM-TnkPrdLeakFai			25	25	25	25	25	25	25	25	25	25	25		
15 Tank Annual Leak Test Fail Alarm	LCB#-NNN-FDet-MMM-TnkAnlLeakFai			25	25	25	25	25	25	25	25	25	25	25		
16 Tank Periodic Test Needed Warning	LCB#-NNN-FDet-MMM-TnkPrdTsWrn			25	25	25	25	25	25	25	25	25	25	25		
17 Tank Annual Test Needed Warning	LCB#-NNN-FDet-MMM-TnkAnlTsWrn			25	25	25	25	25	25	25	25	25	25	25		
18 Tank Periodic Test Needed Alarm	LCB#-NNN-FDet-MMM-TnkPrdTsAlm			25	25	25	25	25	25	25	25	25	25	25		
19 Tank Annual Test Needed Alarm	LCB#-NNN-FDet-MMM-TnkAnlTsAlm			25	25	25	25	25	25	25	25	25	25	25		
20 Tank Leak Test Active	LCB#-NNN-FDet-MMM-TnkLeakTsAct			25	25	25	25	25	25	25	25	25	25	25		

BACnet Generator Object list (Typical for each Unit)																
Object List	**Mapped Object List**	**Read/ Write**	**Object Type**	**Supply Device**	**Install Device**	**Power Device**	**Wire Device**	**Pgm Device**	**Alarmable**	**Alarm Limit**	**Alarm Type**	**Graphic**	**Trend**	**Com'd**	**Units**	**Description (acceptable value range)**
21 Tank No CSLD Idle Time Warning	LCB#-NNN-FDet-MMM-TnkNoIdleTWrn			25	25	25	25	25	25	25	25	25	25	25		
22 Tank Siphon Break Active Warning	LCB#-NNN-FDet-MMM-TnkSipBrkAct			25	25	25	25	25	25	25	25	25	25	25		
23 Tank CSLD Rate Increase Warning	LCB#-NNN-FDet-MMM-TnkRIcrWrn			25	25	25	25	25	25	25	25	25	25	25		
24 Tank AccuChart Calibration Warning	LCB#-NNN-FDet-MMM-TnkClbnWrn			25	25	25	25	25	25	25	25	25	25	25		
25 Tank HRM Reconciliation Warning	LCB#-NNN-FDet-MMM-TnkRecnWrn			25	25	25	25	25	25	25	25	25	25	25		
26 Tank HRM Reconciliation Alarm	LCB#-NNN-FDet-MMM-TnkReconAlm			25	25	25	25	25	25	25	25	25	25	25		
27 Tank Cold Temperature Warning	LCB#-NNN-FDet-MMM-TnkClTmpWrn			25	25	25	25	25	25	25	25	25	25	25		
28 Tank Missing Delivery Ticket Warning	LCB#-NNN-FDet-MMM-TnkNoDelTiket			25	25	25	25	25	25	25	25	25	25	25		
29 Tank/Line Gross Leak Alarm	LCB#-NNN-FDet-MMM-TnkGroLeakAlm			25	25	25	25	25	25	25	25	25	25	25		
Liquid Sensor Alarm				25	25	25	25	25	25	25	25	25	25	25		

BACnet Generator Object list (Typical for each Unit)																
Object List	**Mapped Object List**	**Read/ Write**	**Object Type**	**Supply Device**	**Install Device**	**Power Device**	**Wire Device**	**Pgm Device**	**Alarmable**	**Alarm Limit**	**Alarm Type**	**Graphic**	**Trend**	**Com'd**	**Units**	**Description (acceptable value range)**
2 Sensor Setup Data Warning	LCB#-NNN-FDet-MMM-LiqStuDataWrn			25	25	25	25	25	25	25	25	25	25	25		
3 Sensor Fuel Alarm	LCB#-NNN-FDet-MMM-LiqFAlm			25	25	25	25	25	25	25	25	25	25	25		
4 Sensor Out Alarm	LCB#-NNN-FDet-MMM-LiqSenOutAlm			25	25	25	25	25	25	25	25	25	25	25		
5 Sensor Short Alarm	LCB#-NNN-FDet-MMM-LiqShortAlm			25	25	25	25	25	25	25	25	25	25	25		
6 Sensor Water Alarm	LCB#-NNN-FDet-MMM-LiqWtrAlm			25	25	25	25	25	25	25	25	25	25	25		
7 Sensor Water Out Alarm	LCB#-NNN-FDet-MMM-LiqWtrOutAlm			25	25	25	25	25	25	25	25	25	25	25		
8 Sensor High Liquid Alarm	LCB#-NNN-FDet-MMM-LiqHiLiqAlm			25	25	25	25	25	25	25	25	25	25	25		
9 Sensor Low Liquid Alarm	LCB#-NNN-FDet-MMM-LiqLoLiqAlm			25	25	25	25	25	25	25	25	25	25	25		
10 Sensor Liquid Warning	LCB#-NNN-FDet-MMM-LiqSenLiqWrn			25	25	25	25	25	25	25	25	25	25	25		
Vapour Sensor Alarm				25	25	25	25	25	25	25	25	25	25	25		

BACnet Generator Object list (Typical for each Unit)																
Object List	**Mapped Object List**	**Read/ Write**	**Object Type**	**Supply Device**	**Install Device**	**Power Device**	**Wire Device**	**Pgm Device**	**Alarmable**	**Alarm Limit**	**Alarm Type**	**Graphic**	**Trend**	**Com'd**	**Units**	**Description (acceptable value range)**
2 Sensor Setup Data Warning	LCB#-NNN-FDet-MMM-GasStuDataWrn			25	25	25	25	25	25	25	25	25	25	25		
3 Sensor Fuel Alarm	LCB#-NNN-FDet-MMM-GasFAlm			25	25	25	25	25	25	25	25	25	25	25		
4 Sensor Out Alarm	LCB#-NNN-FDet-MMM-GasSenOutAlm			25	25	25	25	25	25	25	25	25	25	25		
5 Sensor Short Alarm	LCB#-NNN-FDet-MMM-GasShortAlm			25	25	25	25	25	25	25	25	25	25	25		
6 Sensor Water Alarm	LCB#-NNN-FDet-MMM-GasWtrAlm			25	25	25	25	25	25	25	25	25	25	25		
7 Sensor Water Out Alarm	LCB#-NNN-FDet-MMM-GasWtrOutAlm			25	25	25	25	25	25	25	25	25	25	25		
8 Sensor High Liquid Alarm	LCB#-NNN-FDet-MMM-GasHiLiqAlm			25	25	25	25	25	25	25	25	25	25	25		
9 Sensor Low Liquid Alarm	LCB#-NNN-FDet-MMM-GasLoLiqAlm			25	25	25	25	25	25	25	25	25	25	25		
10 Sensor Liquid Warning	LCB#-NNN-FDet-MMM-GasSenLiqWrn			25	25	25	25	25	25	25	25	25	25	25		
Input				25	25	25	25	25	25	25	25	25	25	25		

BACnet Generator Object list (Typical for each Unit)																
Object List	**Mapped Object List**	**Read/ Write**	**Object Type**	**Supply Device**	**Install Device**	**Power Device**	**Wire Device**	**Pgm Device**	**Alarmable**	**Alarm Limit**	**Alarm Type**	**Graphic**	**Trend**	**Com'd**	**Units**	**Description (acceptable value range)**
1 Input Setup Data Warning	LCB#-NNN-FDet-MMM-InStuDataWrn			25	25	25	25	25	25	25	25	25	25	25		
2 Input Normal	LCB#-NNN-FDet-MMM-InNrm			25	25	25	25	25	25	25	25	25	25	25		
3 Input Alarm	LCB#-NNN-FDet-MMM-InAlm			25	25	25	25	25	25	25	25	25	25	25		
Volumetric Line Leak				25	25	25	25	25	25	25	25	25	25	25		
1 VLLD Setup Data Warning	LCB#-NNN-FDet-MMM-VLDStuWrn			25	25	25	25	25	25	25	25	25	25	25		
2 VLLD Self Test Alarm	LCB#-NNN-FDet-MMM-VLDSelfTsAlm			25	25	25	25	25	25	25	25	25	25	25		
3 VLLD Shutdown Alarm	LCB#-NNN-FDet-MMM-VLDSdnAlm			25	25	25	25	25	25	25	25	25	25	25		
4 VLLD Leak Test Fail Alarm	LCB#-NNN-FDet-MMM-VLDLeakTsFai			25	25	25	25	25	25	25	25	25	25	25		
5 VLLD Self test Invalid Warning	LCB#-NNN-FDet-MMM-VLDSelfTsErr			25	25	25	25	25	25	25	25	25	25	25		
6 VLLD Continuous Handle On Warning	LCB#-NNN-FDet-MMM-VLDHdlOnWrn			25	25	25	25	25	25	25	25	25	25	25		
7 VLLD Gross Line Test Fail	LCB#-NNN-			25	25	25	25	25	25	25	25	25	25	25		

BACnet Generator Object list (Typical for each Unit)																
Object List	**Mapped Object List**	**Read/ Write**	**Object Type**	**Supply Device**	**Install Device**	**Power Device**	**Wire Device**	**Pgm Device**	**Alarmable**	**Alarm Limit**	**Alarm Type**	**Graphic**	**Trend**	**Com'd**	**Units**	**Description (acceptable value range)**
Alarm	FDet-MMM-VLDGroLnTs															
8 VLLD Gross Line Self test Fail Alarm	LCB#-NNN-FDet-MMM-VLDGroLnSlfTs			25	25	25	25	25	25	25	25	25	25	25		
9 VLLD Gross Pump Test Fail Alarm	LCB#-NNN-FDet-MMM-VLDGroPmpTs			25	25	25	25	25	25	25	25	25	25	25		
10 VLLD Gross Pump Self test Fail Alarm	LCB#-NNN-FDet-MMM-VLDGroPmpSlf			25	25	25	25	25	25	25	25	25	25	25		
11 VLLD Periodic Test Needed Warning	LCB#-NNN-FDet-MMM-VLDPrdTsReq			25	25	25	25	25	25	25	25	25	25	25		
12 VLLD Annual Test Needed Warning	LCB#-NNN-FDet-MMM-VLDAnlTsReq			25	25	25	25	25	25	25	25	25	25	25		
13 VLLD Periodic Test Needed Alarm	LCB#-NNN-FDet-MMM-VLDPrdTsAlm			25	25	25	25	25	25	25	25	25	25	25		
14 VLLD Annual Test Needed Alarm	LCB#-NNN-FDet-MMM-VLDAnlTsAlm			25	25	25	25	25	25	25	25	25	25	25		
15 VLLD Periodic Line Test Fail Alarm	LCB#-NNN-FDet-MMM-VLDPrdLnTs			25	25	25	25	25	25	25	25	25	25	25		
16 VLLD Periodic Line Self test Fail Alarm	LCB#-NNN-FDet-MMM-VLDPrd			25	25	25	25	25	25	25	25	25	25	25		

BACnet Generator Object list (Typical for each Unit)																
Object List	**Mapped Object List**	**Read/ Write**	**Object Type**	**Supply Device**	**Install Device**	**Power Device**	**Wire Device**	**Pgm Device**	**Alarmable**	**Alarm Limit**	**Alarm Type**	**Graphic**	**Trend**	**Com'd**	**Units**	**Description (acceptable value range)**
	LnSlfTs															
17 VLLD Periodic Pump Test Fail Alarm	LCB#-NNN-FDet-MMM-VLDPrdPmpTs			25	25	25	25	25	25	25	25	25	25	25		
18 VLLD Periodic Pump Self test Fail Alarm	LCB#-NNN-FDet-MMM-VLDPrdPmpSlf			25	25	25	25	25	25	25	25	25	25	25		
19 VLLD Annual Line Test Fail Alarm	LCB#-NNN-FDet-MMM-VLDAnlLnTs			25	25	25	25	25	25	25	25	25	25	25		
20 VLLD Annual Line Self test Fail Alarm	LCB#-NNN-FDet-MMM-VLDAnlLnSlfTs			25	25	25	25	25	25	25	25	25	25	25		
21 VLLD Annual Pump Test Fail Alarm	LCB#-NNN-FDet-MMM-VLDAnlPmpTs			25	25	25	25	25	25	25	25	25	25	25		
22 VLLD Annual Pump Self test Fail Alarm	LCB#-NNN-FDet-MMM-VLDAnlPmpSlf			25	25	25	25	25	25	25	25	25	25	25		
23 VLLD Pressure Warning	LCB#-NNN-FDet-MMM-VLDPrsWrn			25	25	25	25	25	25	25	25	25	25	25		
24 VLLD Pressure Alarm	LCB#-NNN-FDet-MMM-VLDPrsAlm			25	25	25	25	25	25	25	25	25	25	25		
25 VLLD Gross Test Fault Alarm	LCB#-NNN-FDet-MMM-VLDGroTsFau			25	25	25	25	25	25	25	25	25	25	25		

BACnet Generator Object list (Typical for each Unit)																
Object List	**Mapped Object List**	**Read/ Write**	**Object Type**	**Supply Device**	**Install Device**	**Power Device**	**Wire Device**	**Pgm Device**	**Alarmable**	**Alarm Limit**	**Alarm Type**	**Graphic**	**Trend**	**Com'd**	**Units**	**Description (acceptable value range)**
26 VLLD Periodic Test Fault Alarm	LCB#-NNN-FDet-MMM-VLDPrdTsFau			25	25	25	25	25	25	25	25	25	25	25		
27 VLLD Annual Test Fault Alarm	LCB#-NNN-FDet-MMM-VLDAnlTsFau			25	25	25	25	25	25	25	25	25	25	25		
28 VLLD Fuel Out Alarm	LCB#-NNN-FDet-MMM-VLDFOutAlm			25	25	25	25	25	25	25	25	25	25	25		
Groundwater Sensor Alarm				25	25	25	25	25	25	25	25	25	25	25		
2 Sensor Setup Data Warning	LCB#-NNN-FDet-MMM-GdwStuWrn			25	25	25	25	25	25	25	25	25	25	25		
3 Sensor Fuel Alarm	LCB#-NNN-FDet-MMM-GdwSenFAlm			25	25	25	25	25	25	25	25	25	25	25		
4 Sensor Out Alarm	LCB#-NNN-FDet-MMM-GdwSenFOutAlm			25	25	25	25	25	25	25	25	25	25	25		
5 Sensor Short Alarm	LCB#-NNN-FDet-MMM-GdwShortAlm			25	25	25	25	25	25	25	25	25	25	25		
6 Sensor Water Alarm	LCB#-NNN-FDet-MMM-GdwWtrAlm			25	25	25	25	25	25	25	25	25	25	25		
7 Sensor Water Out Alarm	LCB#-NNN-FDet-MMM-GdwWtrOutAlm			25	25	25	25	25	25	25	25	25	25	25		

BACnet Generator Object list (Typical for each Unit)																
Object List	**Mapped Object List**	**Read/ Write**	**Object Type**	**Supply Device**	**Install Device**	**Power Device**	**Wire Device**	**Pgm Device**	**Alarmable**	**Alarm Limit**	**Alarm Type**	**Graphic**	**Trend**	**Com'd**	**Units**	**Description (acceptable value range)**
8 Sensor High Liquid Alarm	LCB#-NNN-FDet-MMM-GdwHiLiqAlm			25	25	25	25	25	25	25	25	25	25	25		
9 Sensor Low Liquid Alarm	LCB#-NNN-FDet-MMM-GdwLoLiqAlm			25	25	25	25	25	25	25	25	25	25	25		
10 Sensor Liquid Warning	LCB#-NNN-FDet-MMM-GdwSenLiqWrn			25	25	25	25	25	25	25	25	25	25	25		
Type-A Sensor Alarm				25	25	25	25	25	25	25	25	25	25	25		
2 Sensor Setup Data Warning	LCB#-NNN-FDet-MMM-TyAStuWrn			25	25	25	25	25	25	25	25	25	25	25		
3 Sensor Fuel Alarm	LCB#-NNN-FDet-MMM-TyASenFAlm			25	25	25	25	25	25	25	25	25	25	25		
4 Sensor Out Alarm	LCB#-NNN-FDet-MMM-TyASenOutAlm			25	25	25	25	25	25	25	25	25	25	25		
5 Sensor Short Alarm	LCB#-NNN-FDet-MMM-TyAShortAlm			25	25	25	25	25	25	25	25	25	25	25		
6 Sensor Water Alarm	LCB#-NNN-FDet-MMM-TyAWtrAlm			25	25	25	25	25	25	25	25	25	25	25		
7 Sensor Water Out Alarm	LCB#-NNN-FDet-MMM-TyAWtrOutAlm			25	25	25	25	25	25	25	25	25	25	25		

BACnet Generator Object list (Typical for each Unit)																
Object List	**Mapped Object List**	**Read/ Write**	**Object Type**	**Supply Device**	**Install Device**	**Power Device**	**Wire Device**	**Pgm Device**	**Alarmable**	**Alarm Limit**	**Alarm Type**	**Graphic**	**Trend**	**Com'd**	**Units**	**Description (acceptable value range)**
8 Sensor High Liquid Alarm	LCB#-NNN-FDet-MMM-TyAHiLiqAlm			25	25	25	25	25	25	25	25	25	25	25		
9 Sensor Low Liquid Alarm	LCB#-NNN-FDet-MMM-TyALoLiqAlm			25	25	25	25	25	25	25	25	25	25	25		
10 Sensor Liquid Warning	LCB#-NNN-FDet-MMM-TyASenLiqWrn			25	25	25	25	25	25	25	25	25	25	25		
Type-B Sensor Alarm				25	25	25	25	25	25	25	25	25	25	25		
2 Sensor Setup Data Warning	LCB#-NNN-FDet-MMM-TyBStuWrn			25	25	25	25	25	25	25	25	25	25	25		
3 Sensor Fuel Alarm	LCB#-NNN-FDet-MMM-TyBSenFAlm			25	25	25	25	25	25	25	25	25	25	25		
4 Sensor Out Alarm	LCB#-NNN-FDet-MMM-TyBSenOutAlm			25	25	25	25	25	25	25	25	25	25	25		
5 Sensor Short Alarm	LCB#-NNN-FDet-MMM-TyBShortAlm			25	25	25	25	25	25	25	25	25	25	25		
6 Sensor Water Alarm	LCB#-NNN-FDet-MMM-TyBWtrAlm			25	25	25	25	25	25	25	25	25	25	25		
7 Sensor Water Out Alarm	LCB#-NNN-FDet-MMM-TyBWtrOutAlm			25	25	25	25	25	25	25	25	25	25	25		

BACnet Generator Object list (Typical for each Unit)																
Object List	**Mapped Object List**	**Read/ Write**	**Object Type**	**Supply Device**	**Install Device**	**Power Device**	**Wire Device**	**Pgm Device**	**Alarmable**	**Alarm Limit**	**Alarm Type**	**Graphic**	**Trend**	**Com'd**	**Units**	**Description (acceptable value range)**
8 Sensor High Liquid Alarm	LCB#-NNN-FDet-MMM-TyBHiLiqAlm			25	25	25	25	25	25	25	25	25	25	25		
9 Sensor Low Liquid Alarm	LCB#-NNN-FDet-MMM-TyBLoLiqAlm			25	25	25	25	25	25	25	25	25	25	25		
10 Sensor Liquid Warning	LCB#-NNN-FDet-MMM-TyBSenLiqWrn			25	25	25	25	25	25	25	25	25	25	25		
Universal Sensor Alarm				25	25	25	25	25	25	25	25	25	25	25		
2 Sensor Setup Data Warning	LCB#-NNN-FDet-MMM-UnvStuWrn			25	25	25	25	25	25	25	25	25	25	25		
3 Sensor Fuel Alarm	LCB#-NNN-FDet-MMM-UnvSenFAlm			25	25	25	25	25	25	25	25	25	25	25		
4 Sensor Out Alarm	LCB#-NNN-FDet-MMM-UnvSenOutAlm			25	25	25	25	25	25	25	25	25	25	25		
5 Sensor Short Alarm	LCB#-NNN-FDet-MMM-UnvShortAlm			25	25	25	25	25	25	25	25	25	25	25		
6 Sensor Water Alarm	LCB#-NNN-FDet-MMM-UnvWtrAlm			25	25	25	25	25	25	25	25	25	25	25		
7 Sensor Water Out Alarm	LCB#-NNN-FDet-MMM-UnvWtrOutAlm			25	25	25	25	25	25	25	25	25	25	25		

BACnet Generator Object list (Typical for each Unit)																
Object List	**Mapped Object List**	**Read/ Write**	**Object Type**	**Supply Device**	**Install Device**	**Power Device**	**Wire Device**	**Pgm Device**	**Alarmable**	**Alarm Limit**	**Alarm Type**	**Graphic**	**Trend**	**Com'd**	**Units**	**Description (acceptable value range)**
8 Sensor High Liquid Alarm	LCB#-NNN-FDet-MMM-UnvHiLiqAlm			25	25	25	25	25	25	25	25	25	25	25		
9 Sensor Low Liquid Alarm	LCB#-NNN-FDet-MMM-UnvLoLiqAlm			25	25	25	25	25	25	25	25	25	25	25		
10 Sensor Liquid Warning	LCB#-NNN-FDet-MMM-UnvSenLiqWrn			25	25	25	25	25	25	25	25	25	25	25		
Auto-Dial				25	25	25	25	25	25	25	25	25	25	25		
1 Autodial Setup Data Warning	LCB#-NNN-FDet-MMM-AtdStuWrn			25	25	25	25	25	25	25	25	25	25	25		
2 Autodial Failed Alarm	LCB#-NNN-FDet-MMM-AtdFaiAlm			25	25	25	25	25	25	25	25	25	25	25		
3 Autodial Service Report Warning	LCB#-NNN-FDet-MMM-AtdSerRcdWrn			25	25	25	25	25	25	25	25	25	25	25		
4 Autodial Alarm Clear Warning	LCB#-NNN-FDet-MMM-AtdAlmCleWrn			25	25	25	25	25	25	25	25	25	25	25		
5 Autodial Delivery Report Warning	LCB#-NNN-FDet-MMM-AtdDelRcdWrn			25	25	25	25	25	25	25	25	25	25	25		
Elec. Dispenser				25	25	25	25	25	25	25	25	25	25	25		
2 DIM Disabled Alarm	LCB#-NNN-FDet-MMM-			25	25	25	25	25	25	25	25	25	25	25		

BACnet Generator Object list (Typical for each Unit)																
Object List	**Mapped Object List**	**Read/ Write**	**Object Type**	**Supply Device**	**Install Device**	**Power Device**	**Wire Device**	**Pgm Device**	**Alarmable**	**Alarm Limit**	**Alarm Type**	**Graphic**	**Trend**	**Com'd**	**Units**	**Description (acceptable value range)**
	ElcDIM DblAlm															
3 DIM Communication Failure Alarm	LCB#-NNN-FDet-MMM-ElcDIM CmmFai			25	25	25	25	25	25	25	25	25	25	25		
4 DIM Transaction Alarm	LCB#-NNN-FDet-MMM-ElcDIM EvtAlm			25	25	25	25	25	25	25	25	25	25	25		
Product Alarm				25	25	25	25	25	25	25	25	25	25	25		
1 BIR Setup Data Warning	LCB#-NNN-FDet-MMM-BIRStu Wrn			25	25	25	25	25	25	25	25	25	25	25		
2 BIR Threshold Alarm	LCB#-NNN-FDet-MMM-BIRLmt Alm			25	25	25	25	25	25	25	25	25	25	25		
3 BIR Close Shift Warning	LCB#-NNN-FDet-MMM-BIRClsS hift			25	25	25	25	25	25	25	25	25	25	25		
4 BIR Close Daily Warning	LCB#-NNN-FDet-MMM-BIRClsD ay			25	25	25	25	25	25	25	25	25	25	25		
Pressure Line Leak				25	25	25	25	25	25	25	25	25	25	25		
1 PLLD Setup Data Warning	LCB#-NNN-FDet-MMM-PLDStu Wrn			25	25	25	25	25	25	25	25	25	25	25		
2 PLLD Gross Test Fail Alarm	LCB#-NNN-FDet-MMM-PLDGro TsFai			25	25	25	25	25	25	25	25	25	25	25		

BACnet Generator Object list (Typical for each Unit)																
Object List	**Mapped Object List**	**Read/ Write**	**Object Type**	**Supply Device**	**Install Device**	**Power Device**	**Wire Device**	**Pgm Device**	**Alarmable**	**Alarm Limit**	**Alarm Type**	**Graphic**	**Trend**	**Com'd**	**Units**	**Description (acceptable value range)**
3 PLLD Annual Test Fail Alarm	LCB#-NNN-FDet-MMM-PLDAnlTsFai			25	25	25	25	25	25	25	25	25	25	25		
4 PLLD Periodic Test Needed Warning	LCB#-NNN-FDet-MMM-PLDPrdTsReq			25	25	25	25	25	25	25	25	25	25	25		
5 PLLD Periodic Test Needed Alarm	LCB#-NNN-FDet-MMM-PLDPrdTsAlm			25	25	25	25	25	25	25	25	25	25	25		
6 PLLD Sensor Open Alarm	LCB#-NNN-FDet-MMM-PLDSenOpnAlm			25	25	25	25	25	25	25	25	25	25	25		
7 PLLD High Pressure Alarm (Obsolete V19)	LCB#-NNN-FDet-MMM-PLDHiPrsAlm			25	25	25	25	25	25	25	25	25	25	25		
8 PLLD Shutdown Alarm	LCB#-NNN-FDet-MMM-PLDSdnAlm			25	25	25	25	25	25	25	25	25	25	25		
9 PLLD High Pressure Warning (Obsolete V19)	LCB#-NNN-FDet-MMM-PLDHiPrsWrn			25	25	25	25	25	25	25	25	25	25	25		
10 PLLD Continuous Handle On Warning (Obsolete V19)	LCB#-NNN-FDet-MMM-PLDHdlOnWrn			25	25	25	25	25	25	25	25	25	25	25		
11 PLLD Periodic Test Fail Alarm	LCB#-NNN-FDet-MMM-PLDPrdTsFai			25	25	25	25	25	25	25	25	25	25	25		
12 PLLD Annual Test Needed	LCB#-NNN-FDet-			25	25	25	25	25	25	25	25	25	25	25		

BACnet Generator Object list (Typical for each Unit)																
Object List	**Mapped Object List**	**Read/ Write**	**Object Type**	**Supply Device**	**Install Device**	**Power Device**	**Wire Device**	**Pgm Device**	**Alarmable**	**Alarm Limit**	**Alarm Type**	**Graphic**	**Trend**	**Com'd**	**Units**	**Description (acceptable value range)**
Warning	MMM-PLDAnlTsReq															
13 PLLD Annual Test Needed Alarm	LCB#-NNN-FDet-MMM-PLDAnlTsAlm			25	25	25	25	25	25	25	25	25	25	25		
14 PLLD Low Pressure Alarm	LCB#-NNN-FDet-MMM-PLDLoPrsAlm			25	25	25	25	25	25	25	25	25	25	25		
15 PLLD Sensor Short Alarm (Obsolete V19)	LCB#-NNN-FDet-MMM-PLDShortAlm			25	25	25	25	25	25	25	25	25	25	25		
16 PLLD Continuous Handle On Alarm	LCB#-NNN-FDet-MMM-PLDHdlOnAlm			25	25	25	25	25	25	25	25	25	25	25		
17 PLLD Fuel Out Alarm	LCB#-NNN-FDet-MMM-PLDFOutAlm			25	25	25	25	25	25	25	25	25	25	25		
18 PLLD Line Equipment Alarm	LCB#-NNN-FDet-MMM-PLDLnEqpAlm			25	25	25	25	25	25	25	25	25	25	25		
Wireless PLLD				25	25	25	25	25	25	25	25	25	25	25		
1 WPLLD Setup Data Warning	LCB#-NNN-FDet-MMM-WPLDStuWrn			25	25	25	25	25	25	25	25	25	25	25		
2 WPLLD Gross Test Fail Alarm	LCB#-NNN-FDet-MMM-WPLDGroTsFai			25	25	25	25	25	25	25	25	25	25	25		
3 WPLLD Periodic Test Fail Alarm	LCB#-NNN-FDet-			25	25	25	25	25	25	25	25	25	25	25		

BACnet Generator Object list (Typical for each Unit)																
Object List	**Mapped Object List**	**Read/ Write**	**Object Type**	**Supply Device**	**Install Device**	**Power Device**	**Wire Device**	**Pgm Device**	**Alarmable**	**Alarm Limit**	**Alarm Type**	**Graphic**	**Trend**	**Com'd**	**Units**	**Description (acceptable value range)**
	MMM-WPLDPrdTsFai															
4 WPLLD Periodic Test Needed Warning	LCB#-NNN-FDet-MMM-WPLDPrdTsReq			25	25	25	25	25	25	25	25	25	25	25		
5 WPLLD Periodic Test Needed Alarm	LCB#-NNN-FDet-MMM-WPLDPrdTsAlm			25	25	25	25	25	25	25	25	25	25	25		
6 WPLLD Sensor Open Alarm	LCB#-NNN-FDet-MMM-WPLDSenOpnAlm			25	25	25	25	25	25	25	25	25	25	25		
7 WPLLD Communications Alarm	LCB#-NNN-FDet-MMM-WPLDCmmAlm			25	25	25	25	25	25	25	25	25	25	25		
8 WPLLD Shutdown Alarm	LCB#-NNN-FDet-MMM-WPLDSdnAlm			25	25	25	25	25	25	25	25	25	25	25		
9 WPLLD Continuous Handle On Warning (Obsolete V19)	LCB#-NNN-FDet-MMM-WPLDHdlOnWrn			25	25	25	25	25	25	25	25	25	25	25		
10 WPLLD Annual Test Fail Alarm	LCB#-NNN-FDet-MMM-WPLDAnlTsFai			25	25	25	25	25	25	25	25	25	25	25		
11 WPLLD Annual Test Needed Warning	LCB#-NNN-FDet-MMM-WPLDAnlTsReq			25	25	25	25	25	25	25	25	25	25	25		
12 WPLLD Annual Test Needed Alarm	LCB#-NNN-FDet-MMM-WPLDA			25	25	25	25	25	25	25	25	25	25	25		

BACnet Generator Object list (Typical for each Unit)																
Object List	**Mapped Object List**	**Read/ Write**	**Object Type**	**Supply Device**	**Install Device**	**Power Device**	**Wire Device**	**Pgm Device**	**Alarmable**	**Alarm Limit**	**Alarm Type**	**Graphic**	**Trend**	**Com'd**	**Units**	**Description (acceptable value range)**
	nlTsAlm															
13 WPLLD High Pressure Warning (Obsolete V19)	LCB#-NNN-FDet-MMM-WPLDHiPrsWrn			25	25	25	25	25	25	25	25	25	25	25		
14 WPLLD High Pressure Alarm (Obsolete V19)	LCB#-NNN-FDet-MMM-WPLDHiPrsAlm			25	25	25	25	25	25	25	25	25	25	25		
15 WPLLD Sensor Short Alarm (Obsolete V19)	LCB#-NNN-FDet-MMM-WPLDShortAlm			25	25	25	25	25	25	25	25	25	25	25		
16 WPLLD Continuous Handle On Alarm	LCB#-NNN-FDet-MMM-WPLDHdlOnAlm			25	25	25	25	25	25	25	25	25	25	25		
17 WPLLD Fuel Out Alarm	LCB#-NNN-FDet-MMM-WPLDFOutAlm			25	25	25	25	25	25	25	25	25	25	25		
18 WPLLD Line Equipment Alarm	LCB#-NNN-FDet-MMM-WPLDLnEqpAlm			25	25	25	25	25	25	25	25	25	25	25		
Externally Detected Alarm				25	25	25	25	25	25	25	25	25	25	25		
1 Externally Detected Communication Alarm	LCB#-NNN-FDet-MMM-ExtCmmAlm			25	25	25	25	25	25	25	25	25	25	25		
2 Communications - Data Reception Timeout	LCB#-NNN-FDet-MMM-ExtCmmDataTo			25	25	25	25	25	25	25	25	25	25	25		
3 Communicatio	LCB#-NNN-			25	25	25	25	25	25	25	25	25	25	25		

BACnet Generator Object list (Typical for each Unit)																
Object List	**Mapped Object List**	**Read/ Write**	**Object Type**	**Supply Device**	**Install Device**	**Power Device**	**Wire Device**	**Pgm Device**	**Alarmable**	**Alarm Limit**	**Alarm Type**	**Graphic**	**Trend**	**Com'd**	**Units**	**Description (acceptable value range)**
ns - Failed Checksum	FDet-MMM-ExtCmmFaiChk															
4 Communications - Parity Error	LCB#-NNN-FDet-MMM-ExtCmmPtyErr			25	25	25	25	25	25	25	25	25	25	25		
5 Modem - Line Busy	LCB#-NNN-FDet-MMM-ExtMdmLnBusy			25	25	25	25	25	25	25	25	25	25	25		
6 Modem - No Answer	LCB#-NNN-FDet-MMM-ExtMdmNoAnsw			25	25	25	25	25	25	25	25	25	25	25		
7 Modem - No Carrier	LCB#-NNN-FDet-MMM-ExtMdmNoCarr			25	25	25	25	25	25	25	25	25	25	25		
8 Modem - No Dial Tone	LCB#-NNN-FDet-MMM-ExtMdmNoDltn			25	25	25	25	25	25	25	25	25	25	25		
9 Modem - Modem Error	LCB#-NNN-FDet-MMM-ExtMdmErr			25	25	25	25	25	25	25	25	25	25	25		
10 Modem - Modem Not Responding	LCB#-NNN-FDet-MMM-ExtMdmNoAck			25	25	25	25	25	25	25	25	25	25	25		
11 Modem - Port Not Available	LCB#-NNN-FDet-MMM-ExtMdmNoPort			25	25	25	25	25	25	25	25	25	25	25		
12 Polling - Could Not Update Queue	LCB#-NNN-FDet-MMM-ExtPollQ			25	25	25	25	25	25	25	25	25	25	25		

BACnet Generator Object list (Typical for each Unit)																
Object List	**Mapped Object List**	**Read/ Write**	**Object Type**	**Supply Device**	**Install Device**	**Power Device**	**Wire Device**	**Pgm Device**	**Alarmable**	**Alarm Limit**	**Alarm Type**	**Graphic**	**Trend**	**Com'd**	**Units**	**Description (acceptable value range)**
	ueErr															
13 Polling - Invalid Data Type Requested	LCB#-NNN-FDet-MMM-ExtPollTyErr			25	25	25	25	25	25	25	25	25	25	25		

3 - EXECUTION

3.01 BACnet Interface Device to the Equipment Supplier's Modbus DeviceInstallation and Commissioning: BACnet/IP requirements

3.01.1 The following BACnet Interface Devices to the Equipment Suppliers' Modbus Devices described in this Section shall reside on the Owner's network as a BACnet/IP device.

3.01.1.1 Packaged Generator Assembly.

3.01.2 A BACnet/IP device provided in the Work shall meet the following requirements:

3.01.2.1 BACnet/IP device shall include an Annex J B/IP router to support BACnet/IP to act as a client and/or server for all BACnet information from the supplied equipment to the BAS Device Network, which is considered a "directly connected network".

3.01.2.2 The BAS Device Network is treated as a "remote network" that is reachable by communicating using BACnet/IP with a router supplied by others that serves the remote network.

3.01.2.3 The BACnet/IP device shall come c/w a BBMD that will be configured to traverse IP subnets.

3.01.2.4 The interface shall have an open Ethernet RJ-45 port for connection to the BAS system device network infrastructure using communications cabling that complies with the TIA/EIA 568-B standard.

3.01.2.5 The interface shall operate at a minimum of 10 Mbps, full duplex.

3.01.3 The Owner will arrange for the following:

3.01.3.1 The IT department will provide a static IP address for the BACnet/IP BACnet Interface Device.

3.01.3.2 The IT department will assist with the commissioning of the network connection with this Contractor and the Modbus Device supplier. The Owner and designated personnel are only responsible for providing the termination to the building switch in the Comms room and for ensuring that the IP connection to the Intranet is operational.

3.01.3.3 The Owner will provide the passwords and access levels required for the Work.

3.01.4 Controls Contractor is the supplier of the BACnet Interface Device to the Equipment Supplier's Modbus Deviceand this Contractor shall provide the following:

3.01.4.1 Configuration of the device with the assigned IP address.

3.01.4.2 Connection of the network cable to the BACnet Interface Device.

3.01.4.3 Commissioning the final network connection to the Owner's network.

3.01.4.4 Providing details of the required alarms, schedules and trends as outlined in the Sequence of Operation.

3.01.4.5 Review of the graphics created by this Contractor.

3.01.4.6 Creation and assignment of passwords and access levels within the device.

3.01.4.7 Joint commissioning of the BACnet Interface Device to the Equipment Supplier's Modbus Devicewith this Contractor to the satisfaction of the Owner or the designated Commissioning Authority. The Work includes the following:

3.01.4.7.1 Use the commissioning forms and procedures outlined in this Division.
3.01.4.7.2 All network visible objects shall be commissioned.
3.01.4.7.3 The process shall be overseen by Controls Engineer.
3.01.4.7.4 Allow 8 hours of on-site time for this Work.
3.01.4.7.5 The following special provisions apply to the commissioning Work.

3.01.4.7.5.1 NONE.

3.01.5 This Contractor shall provide the following:

3.01.5.1 A schedule as to when the networking requirements need to be completed. See the Division 25 section for this information to be provided as a Shop Drawing.
3.01.5.2 Joint commissioning the final network connection to the Owner's Intranet.
3.01.5.3 Creating of the required alarms, schedules and trends as outlined in the Sequence of Operation. The following minimums apply to this Section:

3.01.5.3.1 A minimum of 10 alarms or an alarm for each equipment fault. Two of which are considered critical.
3.01.5.3.2 A minimum of 1 schedule.
3.01.5.3.3 A minimum of 10 Extended Trends.

3.01.5.4 Assistance to ALC Chicago for the creation of the Front End graphics based on information from the supplier of the BACnet Interface Device. The following minimums apply to this Section:

3.01.5.4.1 The equipment supplier shall provide material so ALC Chicago can create a graphic that matches the device. Emulate the functionality of the supplied equipment local interface (e.g., annunciator panel, LCD display, GUI interface) at the BAS system Front End.
3.01.5.4.2 Provide one master alarm graphic showing the Critical Alarms and all equipment fault alarms.
3.01.5.4.3 Where a table of Object Types is not provided in this section, allow for a minimum of 500 objects to be mapped from the BACnet Interface Device.

3.01.5.5 Documentation of passwords and access levels within the device using information provided by the Owner.
3.01.5.6 Commission the BACnet Interface Device to the Equipment Supplier's Modbus Devicewith the equipment supplier, to the satisfaction of the Owner or the designated Commissioning Authority. The Work includes the following:

3.01.5.6.1 Use the commissioning forms and procedures outlined in this Division.
3.01.5.6.2 The process shall be overseen by Controls Engineer.
3.01.5.6.3 Provide confirmation via the Shop Drawing process before the Work starts. Any variations shall be approved via the Shop Drawing process.
3.01.5.6.4 Complete commissioning of all network visible object types according to the procedures outlined in Section 25 08 00, using the relevant Commissioning Forms for each BACnet Object Types.
3.01.5.6.5 Verify all network visible BACnet Object Types correctly display the same information on the Front End as is being displayed on the equipment local interface. All network visible objects shall be commissioned.
3.01.5.6.6 Parse all equipment packaged controls alarms, trends and schedules that are represented as AV and BV BACnet Object Types by the equipment packaged controls interface.
3.01.5.6.7 Allow 8 hours of on-site time for this Work.
3.01.5.6.8 The following special provisions apply to the commissioning Work.

3.01.5.6.8.1 NONE

End of Section

25 20 26.36 INTEGRATED AUTOMATION – BACNET INTERFACE DEVICE (GATEWAYS/NATIVE BACNET DEVICES) – TRANSFER SWITCHES (ALL TYPES)

1 - GENERAL

1.01 Controls Coordination Meeting

1.01.1 This Contractor shall meet with all other Contractors (and/or Manufacturer's representative) who are supplying equipment to coordinate Work for this BACnet Interface Device.

1.01.2 The Controls Contractor shall meet with all Contractors (and/or supplier's representatives) who are supplying equipment with the control options as described above, that are to be integrated with the BACnet Internetwork, to coordinate details of the integration.

1.01.3 The Owner or his designated representative shall be present at this meeting.

1.01.4 Each Contractor and/or supplier providing Modbus Device(s) in this section shall provide the Owner and all other effected Contractors, with details of the proposed interface, including:

1.01.4.1 PICS for BACnet equipment detailed the BACnet BIBBs, BACnet Object Types and BACnet services supported.

1.01.4.2 If a gateway provide details on the proprietary protocol used in the supplier's equipment and the BACnet protocol to which the proprietary points are being mapped.

1.01.4.3 Hardware and software object list using the object list in this section as a guide. This would include object instances for BACnet, register mapping numbers for Modbus, SNVTs for LonMark or other identifiers.

1.01.4.4 Networking requirements including any network address range restrictions, bus communication speeds and any required network accessories.

1.01.4.5 Communications and power wiring requirements for the gateway and ancillary equipment to be terminated into the BACnet Interface Device to the Equipment Supplier's Modbus Device(valves, dampers, sensors, etc.).

1.01.4.6 Equipment installation and mounting requirements if the device is not integral to the supplier's equipment.

1.01.4.7 AutoCAD files to be used to create the BAS graphics.

1.01.4.8 The purpose of this meeting shall be to insure there are no unresolved issues regarding the integration of these products into the BAS Device Network.

1.01.5 Once this information is reviewed and approved, provide a formal submittal via the Shop Drawing process.

1.01.6 Submittals for these products shall not be approved prior to the completion of this meeting.

1.01.7 If the equipment supplier is providing a BACnet gateway device from an OEM supplier, both suppliers shall jointly warrant in writing that the gateway can successfully parse the proprietary protocol used by the packaged controls that come with the equipment.

1.01.8 The BACnet Interface Device to the Equipment Supplier's Modbus Deviceshall permit ALC Chicago to plot the BACnet objects into a graphic his non-UL Front End. This Contractor shall be able to monitor alarms and events and will be able to have control over objects as permitted by the BACnet Interface Device(s).

1.02 Shop Drawings

1.02.1 Provide product data sheets illustrating the equipment packaged controls interface(s) to be integrated with the BAS device network in the Work per the list above.

1.03 BACnet Interface Device Type

1.03.1 This BACnet Interface Device to the Equipment Supplier's Modbus Deviceshall be provided as:

1.03.1.1 <u>Single On-board BACnet Interface Device Type</u>:

1.03.1.1.1 This device is a single onboard BACnet Interface Device. Controls Contractor is responsible for providing and installing this device. Electrical is responsible for providing power to this device is power is not available via the single point of connection. Division 25 is responsible for networking this device.

1.03.1.1.2 The demarcation of Work responsibilities between Division 25 and other Divisions for this device shall be as outlined in the Responsibility Matrix.

1.04 Work By Others for this BACnet Interface Device

1.04.1 References to Division 23 shall be interpreted to mean Divisions 21, 22 and 23 or the Mechanical Subcontractor.
1.04.2 References to Division 26 shall be interpreted to mean Divisions 26, 27, 28 and 33 or the Electrical Subcontractor.
1.04.3 References to Division 13, 41 or other MasterFormat 2004 Divisions shall be interpreted to mean the Subcontractor responsible for supplying and installing the equipment for this Division.

2 - PRODUCTS

2.01 General

2.01.1 Contractor (and/or Manufacturer's representative) equipment that comes with a Modbus Device, is responsible for the following:

2.01.1.1 Configuration, programming, start-up and testing of the BACnet Interface Device to the Equipment Supplier's Modbus Deviceto comply with this Section.
2.01.1.2 Working with this Contractor to commission the BACnet Interface Device to the Equipment Supplier's Modbus Deviceonce it is connected the Intranet at the Place of the Work.
2.01.1.3 Providing alarming details to the Controls Contractor, who is responsible for the alarms that are represented as AV and BV objects by the equipment interface.
2.01.1.4 Providing trending details to the Controls Contractor, who is responsible for the trends that are represented as AV and BV objects by the equipment interface.

2.02 BACnet Interface Device to the Equipment Supplier's Modbus DeviceGeneral Requirements

2.02.1 This Contractor shall provide a BACnet/IP BACnet Interface Device complete with an Annex J router to support BACnet/IP to act as a client and/or server for all BACnet information from this system to the BAS System.
2.02.2 The device shall support use of a static IP address for remote access through the Owner's firewall. Provision of remote access is not included in the Work.
2.02.3 The device shall have an open Ethernet port for connection to the network infrastructure (network connection to panel by the Owner). Co-ordinate network configuration requirements with the IT department through the Owner.
2.02.4 The Modbus Device shall be a product that is manufactured directly by the equipment supplier or may be an OEM product that is supported by the equipment supplier.

2.02.4.1 If the Modbus Device supplier is providing a device from an OEM supplier, both suppliers shall jointly warrant in writing that the gateway can successfully parse the equipment protocol. Provide this information as a Shop Drawing.

2.02.5 It is assumed that this device is not a native BACnet Interface Device.
2.02.6 BACnet/PTP devices used as gateways are not allowed in the Work without the written permission of the Owner.

2.02.6.1 The following BACnet Interface Devices to the Equipment Suppliers' Modbus Devices may be provided as BACnet/PTP:

2.02.6.1.1 NONE.

2.02.7 The BACnet Interface Device to the Equipment Supplier's Modbus Device shall support the following BACnet Interoperability Building Blocks (BIBBs):

2.02.7.1 Data Sharing - ReadProperty - B (DS-RP-B)
2.02.7.2 Data Sharing - ReadPropertyMultiple - B (DS-RPM-B)
2.02.7.3 Data Sharing - WriteProperty - B (DS-WP-B)
2.02.7.4 Data Sharing - WritePropertyMultiple - B (DS-WPM-B)
2.02.7.5 Alarm and Event - Notification Internal - B (AE-N-I-B)
2.02.7.6 Alarm and Event - ACK - B (AE-ACK-B)
2.02.7.7 Alarm and Event - Information - B (AE-INFO-B)
2.02.7.8 Device Management - Dynamic Device Binding - B (DM-DDB-B)
2.02.7.9 Device Management - Dynamic Object Binding - B (DM-DOB-B)
2.02.7.10 Device Management - DeviceCommunicationControl - B (DM-DCC-B)
2.02.7.11 Device Management - TimeSynchronization - B (DM-TS-B)

2.02.7.12 Device Management - UTCTimeSynchronization - B (DM-UTC-B)
2.02.7.13 Device Management - ReinitializeDevice - B (DM-RD-B)
2.02.7.14 Device Management - Restart - B (DM-R-B)

2.02.8 All BACnet Interface Devices to the Equipment Suppliers' Modbus Devices shall utilize the BACnet standard profile fault codes enumerated for the applicable device. The fault code values between zero and two fifty five (0 and 255) are reserved for BACnet standard fault codes and all values above two fifty five (255) are open to Manufacturer value added codes.

2.02.9 The BACnet Interface Device to the Equipment Supplier's Modbus Deviceshall support the following Object types:

2.02.9.1 Analog Input
2.02.9.2 Analog Output
2.02.9.3 Analog Value
2.02.9.4 Binary Input
2.02.9.5 Binary Output
2.02.9.6 Binary Value
2.02.9.7 Device Object
2.02.9.8 Multi-state Input
2.02.9.9 Multi-state Output
2.02.9.10 Multi-state Value

2.02.10 The BACnet Interface Device to the Equipment Supplier's Modbus Deviceshall support the required optional properties to comply with the Specification requirements and Control Sequences.

2.03 Transfer Switch Unit BACnet Interface

2.03.1 The BACnet Interface Device to the Equipment Supplier's Modbus Deviceshall be represented externally as a BACnet/IP device on the Owner's network.

2.03.2 The following points shall be represented as BACnet objects on the Controls Contractor's BACnet/IP BACnet Interface Device. Provide the following points as a minimum:

BACnet Automatic Transfer Switch Object list (Typical for each Unit)																
Object List	**Mapped Object List**	**Read/ Write**	**Object Type**	**Supply Device**	**Install Device**	**Power Device**	**Wire Device**	**Pgm Device**	**Alarmable**	**Alarm Limit**	**Alarm Type**	**Graphic**	**Trend**	**Com'd**	**Units**	**Description (acceptable value range)**
System Overview	LCB#-NNN-ATS-MMM-SysOvv	R	AV	25	25	25	25	25	25	25	25	25	25	25		0--1: Contactor Position (00 = Off; 01 = Normal; 10 = Emerg; 11 = Fault) 2: Preferred Source (0 = Source1; 1= Source2) 3--12: Top Event on Warning Stack 13: Preferred Source Available (0 = No, 1 = Yes) 14: Standby Source Available (0 = No, 1 = Yes) 15: Reserved for future use (always 0)
Source N Line--Neutral L1--L0	LCB#-NNN-ATS-MMM-VtgNLn1ToNeu	R	AV	25	25	25	25	25	25	25	25	25	25	25	dV	Volts AC * 10
Source N Line--Neutral L2--L0	LCB#-NNN-ATS-MMM-VtgNLn2ToNeu	R	AV	25	25	25	25	25	25	25	25	25	25	25	dV	Volts AC * 10
Source N Line--Neutral L3--L0	LCB#-NNN-ATS-MMM-VtgNLn3ToNeu	R	AV	25	25	25	25	25	25	25	25	25	25	25	dV	Volts AC * 10
Source E Line--Neutral L1--L0	LCB#-NNN-ATS-MMM-VtgELn1ToNeu	R	AV	25	25	25	25	25	25	25	25	25	25	25	dV	Volts AC * 10
Source E Line--Neutral L2--L0	LCB#-NNN-ATS-MMM-VtgELn2ToNeu	R	AV	25	25	25	25	25	25	25	25	25	25	25	dV	Volts AC * 10
Source E Line--Neutral L3--L0	LCB#-NNN-ATS-MMM-VtgELn3ToNeu	R	AV	25	25	25	25	25	25	25	25	25	25	25	dV	Volts AC * 10
Source N Line Voltage L1--L2	LCB#-NNN-ATS-MMM-VtgNLn1ToLn2	R	AV	25	25	25	25	25	25	25	25	25	25	25	dV	Volts AC * 10
Source N Line Voltage L2--L3	LCB#-NNN-ATS-MMM-VtgNLn2ToLn3	R	AV	25	25	25	25	25	25	25	25	25	25	25	dV	Volts AC * 10
Source N Line Voltage L3--L1	LCB#-NNN-ATS-MMM-VtgNLn3ToLn1	R	AV	25	25	25	25	25	25	25	25	25	25	25	dV	Volts AC * 10
Source E Line Voltage L1--L2	LCB#-NNN-ATS-MMM-VtgELn1ToLn2	R	AV	25	25	25	25	25	25	25	25	25	25	25	dV	Volts AC * 10
Source E Line Voltage L2--L3	LCB#-NNN-ATS-MMM-VtgELn2ToLn3	R	AV	25	25	25	25	25	25	25	25	25	25	25	dV	Volts AC * 10

BACnet Automatic Transfer Switch Object list (Typical for each Unit)																
Object List	**Mapped Object List**	**Read/ Write**	**Object Type**	**Supply Device**	**Install Device**	**Power Device**	**Wire Device**	**Pgm Device**	**Alarmable**	**Alarm Limit**	**Alarm Type**	**Graphic**	**Trend**	**Com'd**	**Units**	**Description (acceptable value range)**
Source E Line Voltage L3--L1	LCB#-NNN-ATS-MMM-VtgELn3ToLn1	R	AV	25	25	25	25	25	25	25	25	25	25	25	dV	Volts AC * 10
Source N Frequency	LCB#-NNN-ATS-MMM-SrcNFrq	R	AV	25	25	25	25	25	25	25	25	25	25	25	dHz	Hz * 10
Source E Frequency	LCB#-NNN-ATS-MMM-SrcEFrq	R	AV	25	25	25	25	25	25	25	25	25	25	25	dHz	Hz * 10
Current L1	LCB#-NNN-ATS-MMM-CurLn1	R	AV	25	25	25	25	25	25	25	25	25	25	25	dA	Amps * 10
Current L2	LCB#-NNN-ATS-MMM-CurLn2	R	AV	25	25	25	25	25	25	25	25	25	25	25	dA	Amps * 10
Current L3	LCB#-NNN-ATS-MMM-CurLn3	R	AV	25	25	25	25	25	25	25	25	25	25	25	dA	Amps * 10
Phase Rotation Actual	LCB#-NNN-ATS-MMM-PhaRotAcl	R	AV	25	25	25	25	25	25	25	25	25	25	25		0 = disabled; 1 = ABC; 2 = CBA (MSB = Normal; LSB = Emerg.)
Phase Rotation Expected	LCB#-NNN-ATS-MMM-PhaRotXpt	R	AV	25	25	25	25	25	25	25	25	25	25	25		0 = disabled; 1 = ABC; 2 = CBA
Nominal Normal Voltage	LCB#-NNN-ATS-MMM-NomNrmVtg	R	AV	25	25	25	25	25	25	25	25	25	25	25	dV	Volts AC * 10
Nominal Emergency Voltage	LCB#-NNN-ATS-MMM-NomEmeVtg	R	AV	25	25	25	25	25	25	25	25	25	25	25	dV	Volts AC * 10
Nominal Normal Frequency	LCB#-NNN-ATS-MMM-NomNrmFrq	R	AV	25	25	25	25	25	25	25	25	25	25	25	dHz	Hz * 10
Nominal Emergency Frequency	LCB#-NNN-ATS-MMM-NomEmeFrq	R	AV	25	25	25	25	25	25	25	25	25	25	25	dHz	Hz * 10
Normal Number of Phases	LCB#-NNN-ATS-MMM-NrmNumOfPha	R	AV	25	25	25	25	25	25	25	25	25	25	25		1 or 3
Emergency Number of Phases	LCB#-NNN-ATS-MMM-EmeNumOfPha	R	AV	25	25	25	25	25	25	25	25	25	25	25		1 or 3
Rated Amperage	LCB#-NNN-ATS-MMM-RatedAmperage	R	AV	25	25	25	25	25	25	25	25	25	25	25	A	0--4000
Transition Mode	LCB#-NNN-ATS-MMM-TrtMode	R	AV	25	25	25	25	25	25	25	25	25	25	25		0--1: 00 = Open; 01 = Programmed; 10 = Closed; 11 = Reserved
Mode of Operation	LCB#-NNN-ATS-MMM-ModeOfOp	R	AV	25	25	25	25	25	25	25	25	25	25	25		2--3: 01 = Genset to Util; 10 = Util to Util; 00 = Genset to Genset; 11 = Util to Gen--Gen

BACnet Automatic Transfer Switch Object list (Typical for each Unit)																
Object List	**Mapped Object List**	**Read/ Write**	**Object Type**	**Supply Device**	**Install Device**	**Power Device**	**Wire Device**	**Pgm Device**	**Alarmable**	**Alarm Limit**	**Alarm Type**	**Graphic**	**Trend**	**Com'd**	**Units**	**Description (acceptable value range)**
Supervised Transfer Control Switch Position	LCB#-NNN-ATS-MMM-SpvXfrCtlSwt	R	AV	25	25	25	25	25	25	25	25	25	25	25		4: 0 = Auto; 1 = Manual
Password for writing register 40057	LCB#-NNN-ATS-MMM-Pwd40057	R	AV	25	25	25	25	25	25	25	25	25	25	25		0 -- 32768
Normal Engine Start Time Delay	LCB#-NNN-ATS-MMM-NrmEnStTDly	R	AV	25	25	25	25	25	25	25	25	25	25	25	s	0--10 sec
Emergency Engine Start Time Delay	LCB#-NNN-ATS-MMM-EmeEnStTDly	R	AV	25	25	25	25	25	25	25	25	25	25	25	s	0--10 sec
Normal Ext. Engine Start Time Delay	LCB#-NNN-ATS-MMM-NrmExtEnStDly	R	AV	25	25	25	25	25	25	25	25	25	25	25	s	0--3600 sec
Emergency Ext. Engine Start Time Delay	LCB#-NNN-ATS-MMM-EmeExtEnStDly	R	AV	25	25	25	25	25	25	25	25	25	25	25	s	0--3600 sec
Normal Engine Cooldown	LCB#-NNN-ATS-MMM-NrmEnCld	R	AV	25	25	25	25	25	25	25	25	25	25	25	s	0--3600 sec
Emergency Engine Cooldown	LCB#-NNN-ATS-MMM-EmeEnCld	R	AV	25	25	25	25	25	25	25	25	25	25	25	s	0--3600 sec
Standby to Preferred	LCB#-NNN-ATS-MMM-SbyToPfd	R	AV	25	25	25	25	25	25	25	25	25	25	25	s	0--3600 sec
Preferred to Standby	LCB#-NNN-ATS-MMM-PfdToSby	R	AV	25	25	25	25	25	25	25	25	25	25	25	s	0--3600 sec
Off (Preferred to Standby -- Prog. Transition)	LCB#-NNN-ATS-MMM-OffPfdToSby	R	AV	25	25	25	25	25	25	25	25	25	25	25	s	0--3600 sec
Off (Standby to Preferred -- Prog. Transition)	LCB#-NNN-ATS-MMM-OffSbyToPfd	R	AV	25	25	25	25	25	25	25	25	25	25	25	s	0--3600 sec
Fail to Acquire Preferred	LCB#-NNN-ATS-MMM-FaiToAcqPfd	R	AV	25	25	25	25	25	25	25	25	25	25	25	s	1--3600 sec (1--300 sec for closed transition)
Fail to Acquire Standby	LCB#-NNN-ATS-MMM-FaiToAcqSby	R	AV	25	25	25	25	25	25	25	25	25	25	25	s	1--3600 sec (1--300 sec for closed transition)
Fail to Synchronize	LCB#-NNN-ATS-MMM-FaiToSyn	R	AV	25	25	25	25	25	25	25	25	25	25	25	s	1--3600 sec
Fail to Synch. Enable	LCB#-NNN-ATS-MMM-FaiToSynEna	R	AV	25	25	25	25	25	25	25	25	25	25	25		0 = disabled; 1 = enabled
Active Time Delay #	LCB#-NNN-ATS-MMM-ActTDlyNum	R	AV	25	25	25	25	25	25	25	25	25	25	25		

BACnet Automatic Transfer Switch Object list (Typical for each Unit)																
Object List	**Mapped Object List**	**Read/ Write**	**Object Type**	**Supply Device**	**Install Device**	**Power Device**	**Wire Device**	**Pgm Device**	**Alarmable**	**Alarm Limit**	**Alarm Type**	**Graphic**	**Trend**	**Com'd**	**Units**	**Description (acceptable value range)**
Active Time Delay Remaining	LCB#-NNN-ATS-MMM-ActTDlyRmn	R	AV	25	25	25	25	25	25	25	25	25	25	25		Seconds * 10
Active Time Delay Preset	LCB#-NNN-ATS-MMM-ActTDlyPst	R	AV	25	25	25	25	25	25	25	25	25	25	25		Seconds * 10
Normal Over Voltage Dropout	LCB#-NNN-ATS-MMM-NrmOvrVtgDpo	R	AV	25	25	25	25	25	25	25	25	25	25	25		105%--135% of Nominal
Normal Over Voltage Pickup	LCB#-NNN-ATS-MMM-NrmOvrVtgPku	R	AV	25	25	25	25	25	25	25	25	25	25	25		95%--100% of Nominal
Normal Under Voltage Pickup	LCB#-NNN-ATS-MMM-NrmUdrVtgPku	R	AV	25	25	25	25	25	25	25	25	25	25	25		85%--100% of Nominal
Normal Under Voltage Dropout	LCB#-NNN-ATS-MMM-NrmUdrVtgDpo	R	AV	25	25	25	25	25	25	25	25	25	25	25		75%--98% of Pickup
Normal Unbalance Enabled	LCB#-NNN-ATS-MMM-NrmUblEna	R	AV	25	25	25	25	25	25	25	25	25	25	25		0 = disabled; 1 = enabled
Normal Unbalance Voltage Dropout	LCB#-NNN-ATS-MMM-NrmUblVtgDpo	R	AV	25	25	25	25	25	25	25	25	25	25	25		5%--20%
Normal Unbalance Voltage Pickup	LCB#-NNN-ATS-MMM-NrmUblVtgPku	R	AV	25	25	25	25	25	25	25	25	25	25	25		3%--18%
Normal Voltage Debounce Time	LCB#-NNN-ATS-MMM-NrmVtgDbcT	R	AV	25	25	25	25	25	25	25	25	25	25	25		0.1 -- 9.9 sec * 10
Emergency Over Voltage Dropout	LCB#-NNN-ATS-MMM-EmeOvrVtgDpo	R	AV	25	25	25	25	25	25	25	25	25	25	25		105%--135% of Nominal
Emergency Over Voltage Pickup	LCB#-NNN-ATS-MMM-EmeOvrVtgPku	R	AV	25	25	25	25	25	25	25	25	25	25	25		95%--100% of Nominal
Emergency Under Voltage Pickup	LCB#-NNN-ATS-MMM-EmeUdrVtgPku	R	AV	25	25	25	25	25	25	25	25	25	25	25		85%--100% of Nominal
Emergency Under Voltage Dropout	LCB#-NNN-ATS-MMM-EmeUdrVtgDpo	R	AV	25	25	25	25	25	25	25	25	25	25	25		75%--98% of Pickup
Emergency Unbalance Enabled	LCB#-NNN-ATS-MMM-EmeUblEna	R	AV	25	25	25	25	25	25	25	25	25	25	25		0 = disabled; 1 = enabled

BACnet Automatic Transfer Switch Object list (Typical for each Unit)																
Object List	**Mapped Object List**	**Read/ Write**	**Object Type**	**Supply Device**	**Install Device**	**Power Device**	**Wire Device**	**Pgm Device**	**Alarmable**	**Alarm Limit**	**Alarm Type**	**Graphic**	**Trend**	**Com'd**	**Units**	**Description (acceptable value range)**
Emergency Unbalance Voltage Dropout	LCB#-NNN-ATS-MMM-EmeUblVtgDpo	R	AV	25	25	25	25	25	25	25	25	25	25	25		
Emergency Unbalance Voltage Pickup	LCB#-NNN-ATS-MMM-EmeUblVtgPku	R	AV	25	25	25	25	25	25	25	25	25	25	25		3%--18%
Emergency Voltage Debounce Time	LCB#-NNN-ATS-MMM-EmeVtgDbcT	R	AV	25	25	25	25	25	25	25	25	25	25	25		0.1 -- 9.9 sec * 10
Normal Over Freq Dropout	LCB#-NNN-ATS-MMM-NrmOvrFrqDpo	R	AV	25	25	25	25	25	25	25	25	25	25	25		101%--105% of Pickup
Normal Over Freq Pickup	LCB#-NNN-ATS-MMM-NrmOvrFrqPku	R	AV	25	25	25	25	25	25	25	25	25	25	25		105%--120% of Nominal
Normal Under Freq Dropout	LCB#-NNN-ATS-MMM-NrmUdrFrqDpo	R	AV	25	25	25	25	25	25	25	25	25	25	25		95%--99% of Pickup
Normal Under Freq Pickup	LCB#-NNN-ATS-MMM-NrmUdrFrqPku	R	AV	25	25	25	25	25	25	25	25	25	25	25		80%--95% of Nominal
Normal Freq Dropout Time	LCB#-NNN-ATS-MMM-NrmFrqDpoT	R	AV	25	25	25	25	25	25	25	25	25	25	25		0.1 -- 15.0 sec * 10
Emergency Over Freq Dropout	LCB#-NNN-ATS-MMM-EmeOvrFrqDpo	R	AV	25	25	25	25	25	25	25	25	25	25	25		101%--105% of Pickup
Emergency Over Freq Pickup	LCB#-NNN-ATS-MMM-EmeOvrFrqPku	R	AV	25	25	25	25	25	25	25	25	25	25	25		105%--120% of Nominal
Emergency Under Freq Dropout	LCB#-NNN-ATS-MMM-EmeUdrFrqDpo	R	AV	25	25	25	25	25	25	25	25	25	25	25		95%--99% of Pickup
Emergency Under Freq Pickup	LCB#-NNN-ATS-MMM-EmeUdrFrqPku	R	AV	25	25	25	25	25	25	25	25	25	25	25		80%--95% of Nominal
Emergency Freq Dropout Time	LCB#-NNN-ATS-MMM-EmeFrqDpoT	R	AV	25	25	25	25	25	25	25	25	25	25	25		0.1 -- 15.0 sec * 10
MLB Programmable Output #1	LCB#-NNN-ATS-MMM-MLBPgmO1	R	AV	25	25	25	25	25	25	25	25	25	25	25		Event Code
MLB Programmable Output #2	LCB#-NNN-ATS-MMM-MLBPgmO2	R	AV	25	25	25	25	25	25	25	25	25	25	25		Event Code

BACnet Automatic Transfer Switch Object list (Typical for each Unit)																
Object List	**Mapped Object List**	**Read/ Write**	**Object Type**	**Supply Device**	**Install Device**	**Power Device**	**Wire Device**	**Pgm Device**	**Alarmable**	**Alarm Limit**	**Alarm Type**	**Graphic**	**Trend**	**Com'd**	**Units**	**Description (acceptable value range)**
MLB Programmable Input #1	LCB#-NNN-ATS-MMM-MLBPgmIn1	R	AV	25	25	25	25	25	25	25	25	25	25	25		Event Code
MLB Programmable Input #2	LCB#-NNN-ATS-MMM-MLBPgmIn2	R	AV	25	25	25	25	25	25	25	25	25	25	25		Event Code
Expansion Board Address 1 Output #1	LCB#-NNN-ATS-MMM-ExpBrdAdr1O1	R	AV	25	25	25	25	25	25	25	25	25	25	25		Event Code
Expansion Board Address 1 Output #2	LCB#-NNN-ATS-MMM-ExpBrdAdr1O2	R	AV	25	25	25	25	25	25	25	25	25	25	25		Event Code
Expansion Board Address 1 Output #3	LCB#-NNN-ATS-MMM-ExpBrdAdr1O3	R	AV	25	25	25	25	25	25	25	25	25	25	25		Event Code
Expansion Board Address 1 Output #4	LCB#-NNN-ATS-MMM-ExpBrdAdr1O4	R	AV	25	25	25	25	25	25	25	25	25	25	25		Event Code
Expansion Board Address 1 Output #5	LCB#-NNN-ATS-MMM-ExpBrdAdr1O5	R	AV	25	25	25	25	25	25	25	25	25	25	25		Event Code
Expansion Board Address 1 Output #6	LCB#-NNN-ATS-MMM-ExpBrdAdr1O6	R	AV	25	25	25	25	25	25	25	25	25	25	25		Event Code
Expansion Board Address 2 Output #1	LCB#-NNN-ATS-MMM-ExpBrdAdr2O1	R	AV	25	25	25	25	25	25	25	25	25	25	25		Event Code
Expansion Board Address 2 Output #2	LCB#-NNN-ATS-MMM-ExpBrdAdr2O2	R	AV	25	25	25	25	25	25	25	25	25	25	25		Event Code
Expansion Board Address 2 Output #3	LCB#-NNN-ATS-MMM-ExpBrdAdr2O3	R	AV	25	25	25	25	25	25	25	25	25	25	25		Event Code
Expansion Board Address 2 Output #4	LCB#-NNN-ATS-MMM-ExpBrdAdr2O4	R	AV	25	25	25	25	25	25	25	25	25	25	25		Event Code
Expansion Board Address 2 Output #5	LCB#-NNN-ATS-MMM-ExpBrdAdr2O5	R	AV	25	25	25	25	25	25	25	25	25	25	25		Event Code
Expansion Board Address 2 Output #6	LCB#-NNN-ATS-MMM-ExpBrdAdr2O6	R	AV	25	25	25	25	25	25	25	25	25	25	25		Event Code
Expansion Board Address 3 Output #1	LCB#-NNN-ATS-MMM-ExpBrdAdr3O	R	AV	25	25	25	25	25	25	25	25	25	25	25		Event Code

BACnet Automatic Transfer Switch Object list (Typical for each Unit)																
Object List	**Mapped Object List**	**Read/ Write**	**Object Type**	**Supply Device**	**Install Device**	**Power Device**	**Wire Device**	**Pgm Device**	**Alarmable**	**Alarm Limit**	**Alarm Type**	**Graphic**	**Trend**	**Com'd**	**Units**	**Description (acceptable value range)**
	1															
Expansion Board Address 3 Output #2	LCB#-NNN-ATS-MMM-ExpBrdAdr3O2	R	AV	25	25	25	25	25	25	25	25	25	25	25		Event Code
Expansion Board Address 3 Output #3	LCB#-NNN-ATS-MMM-ExpBrdAdr3O3	R	AV	25	25	25	25	25	25	25	25	25	25	25		Event Code
Expansion Board Address 3 Output #4	LCB#-NNN-ATS-MMM-ExpBrdAdr3O4	R	AV	25	25	25	25	25	25	25	25	25	25	25		Event Code
Expansion Board Address 3 Output #5	LCB#-NNN-ATS-MMM-ExpBrdAdr3O5	R	AV	25	25	25	25	25	25	25	25	25	25	25		Event Code
Expansion Board Address 3 Output #6	LCB#-NNN-ATS-MMM-ExpBrdAdr3O6	R	AV	25	25	25	25	25	25	25	25	25	25	25		Event Code
Expansion Board Address 4 Output #1	LCB#-NNN-ATS-MMM-ExpBrdAdr4O1	R	AV	25	25	25	25	25	25	25	25	25	25	25		Event Code
Expansion Board Address 4 Output #2	LCB#-NNN-ATS-MMM-ExpBrdAdr4O2	R	AV	25	25	25	25	25	25	25	25	25	25	25		Event Code
Expansion Board Address 4 Output #3	LCB#-NNN-ATS-MMM-ExpBrdAdr4O3	R	AV	25	25	25	25	25	25	25	25	25	25	25		Event Code
Expansion Board Address 4 Output #4	LCB#-NNN-ATS-MMM-ExpBrdAdr4O4	R	AV	25	25	25	25	25	25	25	25	25	25	25		Event Code
Expansion Board Address 4 Output #5	LCB#-NNN-ATS-MMM-ExpBrdAdr4O5	R	AV	25	25	25	25	25	25	25	25	25	25	25		Event Code
Expansion Board Address 4 Output #6	LCB#-NNN-ATS-MMM-ExpBrdAdr4O6	R	AV	25	25	25	25	25	25	25	25	25	25	25		Event Code
Expansion Board Address 1 Input #1	LCB#-NNN-ATS-MMM-ExpBrdAdr1In1	R	AV	25	25	25	25	25	25	25	25	25	25	25		Event Code
Expansion Board Address 1 Input #2	LCB#-NNN-ATS-MMM-ExpBrdAdr1In2	R	AV	25	25	25	25	25	25	25	25	25	25	25		Event Code

BACnet Automatic Transfer Switch Object list (Typical for each Unit)																
Object List	**Mapped Object List**	**Read/ Write**	**Object Type**	**Supply Device**	**Install Device**	**Power Device**	**Wire Device**	**Pgm Device**	**Alarmable**	**Alarm Limit**	**Alarm Type**	**Graphic**	**Trend**	**Com'd**	**Units**	**Description (acceptable value range)**
Expansion Board Address 2 Input #1	LCB#-NNN-ATS-MMM-ExpBrdAdr2In1	R	AV	25	25	25	25	25	25	25	25	25	25	25		Event Code
Expansion Board Address 2 Input #2	LCB#-NNN-ATS-MMM-ExpBrdAdr2In2	R	AV	25	25	25	25	25	25	25	25	25	25	25		Event Code
Expansion Board Address 3 Input #1	LCB#-NNN-ATS-MMM-ExpBrdAdr3In1	R	AV	25	25	25	25	25	25	25	25	25	25	25		Event Code
Expansion Board Address 3 Input #2	LCB#-NNN-ATS-MMM-ExpBrdAdr3In2	R	AV	25	25	25	25	25	25	25	25	25	25	25		Event Code
Expansion Board Address 4 Input #1	LCB#-NNN-ATS-MMM-ExpBrdAdr4In1	R	AV	25	25	25	25	25	25	25	25	25	25	25		Event Code
Expansion Board Address 4 Input #2	LCB#-NNN-ATS-MMM-ExpBrdAdr4In2	R	AV	25	25	25	25	25	25	25	25	25	25	25		Event Code
Expansion Board Address 1 Board Type	LCB#-NNN-ATS-MMM-ExpBrdAdr1Ty	R	AV	25	25	25	25	25	25	25	25	25	25	25		0 = No Board Installed; 1 = Standard; 2 = Power
Expansion Board Address 2 Board Type	LCB#-NNN-ATS-MMM-ExpBrdAdr2Ty	R	AV	25	25	25	25	25	25	25	25	25	25	25		0 = No Board Installed; 1 = Standard; 2 = Power
Expansion Board Address 3 Board Type	LCB#-NNN-ATS-MMM-ExpBrdAdr3Ty	R	AV	25	25	25	25	25	25	25	25	25	25	25		
Expansion Board Address 4 Board Type	LCB#-NNN-ATS-MMM-ExpBrdAdr4Ty	R	AV	25	25	25	25	25	25	25	25	25	25	25		0 = No Board Installed; 1 = Standard; 2 = Power
Alarm Option Board	LCB#-NNN-ATS-MMM-AlmOptnBrd	R	AV	25	25	25	25	25	25	25	25	25	25	25		0 = No Board Installed; 1 = Normal; 2 = Chicago; 3 = Silence
Battery Option Board Installed	LCB#-NNN-ATS-MMM-BttOptnBrdIst	R	AV	25	25	25	25	25	25	25	25	25	25	25		0 = No Board Installed; 1 = Installed
MLB Output State	LCB#-NNN-ATS-MMM-MLBOStt	R	AV	25	25	25	25	25	25	25	25	25	25	25		One bit per output
MLB Input State	LCB#-NNN-ATS-MMM-MLBInStt	R	AV	25	25	25	25	25	25	25	25	25	25	25		One bit per input
Expansion Board #1 Outputs State	LCB#-NNN-ATS-MMM-ExpBrd1OStt	R	AV	25	25	25	25	25	25	25	25	25	25	25		One bit per output

BACnet Automatic Transfer Switch Object list (Typical for each Unit)																
Object List	**Mapped Object List**	**Read/ Write**	**Object Type**	**Supply Device**	**Install Device**	**Power Device**	**Wire Device**	**Pgm Device**	**Alarmable**	**Alarm Limit**	**Alarm Type**	**Graphic**	**Trend**	**Com'd**	**Units**	**Description (acceptable value range)**
Expansion Board #2 Outputs State	LCB#-NNN-ATS-MMM-ExpBrd2OStt	R	AV	25	25	25	25	25	25	25	25	25	25	25		
Expansion Board #3 Outputs State	LCB#-NNN-ATS-MMM-ExpBrd3OStt	R	AV	25	25	25	25	25	25	25	25	25	25	25		
Expansion Board #4 Outputs State	LCB#-NNN-ATS-MMM-ExpBrd4OStt	R	AV	25	25	25	25	25	25	25	25	25	25	25		
Expansion Board #1 Inputs State	LCB#-NNN-ATS-MMM-ExpBrd1InStt	R	AV	25	25	25	25	25	25	25	25	25	25	25		One bit per input
Expansion Board #2 Inputs State	LCB#-NNN-ATS-MMM-ExpBrd2InStt	R	AV	25	25	25	25	25	25	25	25	25	25	25		
Expansion Board #3 Inputs State	LCB#-NNN-ATS-MMM-ExpBrd3InStt	R	AV	25	25	25	25	25	25	25	25	25	25	25		
Expansion Board #4 Inputs State	LCB#-NNN-ATS-MMM-ExpBrd4InStt	R	AV	25	25	25	25	25	25	25	25	25	25	25		
Software Controlled Outputs State	LCB#-NNN-ATS-MMM-SfwCtlOStt	R	AV	25	25	25	25	25	25	25	25	25	25	25		One bit per output
Software Controlled Outputs Assigned	LCB#-NNN-ATS-MMM-SfwCtlOAsg	R	AV	25	25	25	25	25	25	25	25	25	25	25		One bit per output
Remote Monitoring Input State	LCB#-NNN-ATS-MMM-RemMonInStt	R	AV	25	25	25	25	25	25	25	25	25	25	25		One bit per input
Remote Monitoring Input Assigned	LCB#-NNN-ATS-MMM-RemMonInAsg	R	AV	25	25	25	25	25	25	25	25	25	25	25		One bit per input
SCO #1 Description	LCB#-NNN-ATS-MMM-SCO1Des	R	AV	25	25	25	25	25	25	25	25	25	25	25		Software controller output
SCO #2 Description	LCB#-NNN-ATS-MMM-SCO2Des	R	AV	25	25	25	25	25	25	25	25	25	25	25		
SCO #3 Description	LCB#-NNN-ATS-MMM-SCO3Des	R	AV	25	25	25	25	25	25	25	25	25	25	25		
SCO #4 Description	LCB#-NNN-ATS-MMM-SCO4Des	R	AV	25	25	25	25	25	25	25	25	25	25	25		
Remote Monitored Input #1Description	LCB#-NNN-ATS-MMM-RemMonIn1Des	R	AV	25	25	25	25	25	25	25	25	25	25	25		
Remote Monitored Input #2 Description	LCB#-NNN-ATS-MMM-RemMonIn2Des	R	AV	25	25	25	25	25	25	25	25	25	25	25		

BACnet Automatic Transfer Switch Object list (Typical for each Unit)																
Object List	**Mapped Object List**	**Read/ Write**	**Object Type**	**Supply Device**	**Install Device**	**Power Device**	**Wire Device**	**Pgm Device**	**Alarmable**	**Alarm Limit**	**Alarm Type**	**Graphic**	**Trend**	**Com'd**	**Units**	**Description (acceptable value range)**
Remote Monitored Input #3 Description	LCB#-NNN-ATS-MMM-RemMonIn3Des	R	AV	25	25	25	25	25	25	25	25	25	25	25		
Remote Monitored Input #4 Description	LCB#-NNN-ATS-MMM-RemMonIn4Des	R	AV	25	25	25	25	25	25	25	25	25	25	25		
Accessory Setup	LCB#-NNN-ATS-MMM-AcsStu	R	AV	25	25	25	25	25	25	25	25	25	25	25		0: Enable Engine Start Extended Time Delay 1: Reserved for future use (always 0) 2: Enable In Phase Monitor 3: Remote Test Loading (0=Loaded; 1=Unloaded) 4: Commit to Transfer 5: Peak Shave Delay Bypass 6: 3--Source Eng. Start Mode (0=pref. first; 1=both @ same time) 7: 3--source Pref. Source Toggle 8: In Phase Transition Angle (0=Lagging; 1=Leading) 9--15: In Phase Transition Angle
Accessory Status	LCB#-NNN-ATS-MMM-AcsSta	R	AV	25	25	25	25	25	25	25	25	25	25	25		0: Exercise In Progress 1: In Phase Monitor Active 2: Load Control In Progress 3: Peak Shaving In Progress 4: Loaded Test Occurring 5: Unloaded Test Occurring 6: Auto-Loaded Test Occurring
DIP Switch Position	LCB#-NNN-ATS-MMM-DIPSwtPos	R	AV	25	25	25	25	25	25	25	25	25	25	25		0: Maintenance Mode 1: Password Disabled 2: Spare 3 On 3: Spare 4 On
Disconnect from N Before Transfer N-->E Delay #1	LCB#-NNN-ATS-MMM-DcnNBfXfrDly1	R	AV	25	25	25	25	25	25	25	25	25	25	25	s	0--3600 Sec
Disconnect from N Before Transfer N-->E Delay #2	LCB#-NNN-ATS-MMM-DcnNBfXfrDly2	R	AV	25	25	25	25	25	25	25	25	25	25	25	s	0--3600 Sec
Disconnect from N Before Transfer N-->E Delay #3	LCB#-NNN-ATS-MMM-DcnNBfXfrDly3	R	AV	25	25	25	25	25	25	25	25	25	25	25	s	0--3600 Sec
Disconnect from N Before Transfer N-->E Delay #4	LCB#-NNN-ATS-MMM-DcnNBfXfrDly4	R	AV	25	25	25	25	25	25	25	25	25	25	25	s	0--3600 Sec
Disconnect from N Before Transfer N-->E	LCB#-NNN-ATS-MMM-DcnNBfXfrDl	R	AV	25	25	25	25	25	25	25	25	25	25	25	s	0--3600 Sec

BACnet Automatic Transfer Switch Object list (Typical for each Unit)																
Object List	**Mapped Object List**	**Read/ Write**	**Object Type**	**Supply Device**	**Install Device**	**Power Device**	**Wire Device**	**Pgm Device**	**Alarmable**	**Alarm Limit**	**Alarm Type**	**Graphic**	**Trend**	**Com'd**	**Units**	**Description (acceptable value range)**
Delay #5	y5															
Disconnect from N Before Transfer N-->E Delay #6	LCB#-NNN-ATS-MMM-DcnNBfXfrDly6	R	AV	25	25	25	25	25	25	25	25	25	25	25	s	0--3600 Sec
Disconnect from N Before Transfer N-->E Delay #7	LCB#-NNN-ATS-MMM-DcnNBfXfrDly7	R	AV	25	25	25	25	25	25	25	25	25	25	25	s	0--3600 Sec
Disconnect from N Before Transfer N-->E Delay #8	LCB#-NNN-ATS-MMM-DcnNBfXfrDly8	R	AV	25	25	25	25	25	25	25	25	25	25	25	s	0--3600 Sec
Disconnect from N Before Transfer N-->E Delay #9	LCB#-NNN-ATS-MMM-DcnNBfXfrDly9	R	AV	25	25	25	25	25	25	25	25	25	25	25	s	0--3600 Sec
Connect to E After Transfer N-->E Delay #1	LCB#-NNN-ATS-MMM-CnnEAfXfrDly1	R	AV	25	25	25	25	25	25	25	25	25	25	25	s	0--3600 Sec
Connect to E After Transfer N-->E Delay #2	LCB#-NNN-ATS-MMM-CnnEAfXfrDly2	R	AV	25	25	25	25	25	25	25	25	25	25	25	s	0--3600 Sec
Connect to E After Transfer N-->E Delay #3	LCB#-NNN-ATS-MMM-CnnEAfXfrDly3	R	AV	25	25	25	25	25	25	25	25	25	25	25	s	0--3600 Sec
Connect to E After Transfer N-->E Delay #4	LCB#-NNN-ATS-MMM-CnnEAfXfrDly4	R	AV	25	25	25	25	25	25	25	25	25	25	25	s	0--3600 Sec
Connect to E After Transfer N-->E Delay #5	LCB#-NNN-ATS-MMM-CnnEAfXfrDly5	R	AV	25	25	25	25	25	25	25	25	25	25	25	s	0--3600 Sec
Connect to E After Transfer N-->E Delay #6	LCB#-NNN-ATS-MMM-CnnEAfXfrDly6	R	AV	25	25	25	25	25	25	25	25	25	25	25	s	0--3600 Sec
Connect to E After Transfer N-->E Delay #7	LCB#-NNN-ATS-MMM-CnnEAfXfrDly7	R	AV	25	25	25	25	25	25	25	25	25	25	25	s	0--3600 Sec
Connect to E After Transfer N-->E Delay #8	LCB#-NNN-ATS-MMM-CnnEAfXfrDly8	R	AV	25	25	25	25	25	25	25	25	25	25	25	s	0--3600 Sec
Connect to E After Transfer N-->E Delay #9	LCB#-NNN-ATS-MMM-CnnEAfXfrDly9	R	AV	25	25	25	25	25	25	25	25	25	25	25	s	0--3600 Sec

BACnet Automatic Transfer Switch Object list (Typical for each Unit)																
Object List	**Mapped Object List**	**Read/ Write**	**Object Type**	**Supply Device**	**Install Device**	**Power Device**	**Wire Device**	**Pgm Device**	**Alarmable**	**Alarm Limit**	**Alarm Type**	**Graphic**	**Trend**	**Com'd**	**Units**	**Description (acceptable value range)**
Disconnect from E Before Transfer E-->N Delay #1	LCB#-NNN-ATS-MMM-DcnEBfXfrDly1	R	AV	25	25	25	25	25	25	25	25	25	25	25	s	0--3600 Sec
Disconnect from E Before Transfer E-->N Delay #2	LCB#-NNN-ATS-MMM-DcnEBfXfrDly2	R	AV	25	25	25	25	25	25	25	25	25	25	25	s	0--3600 Sec
Disconnect from E Before Transfer E-->N Delay #3	LCB#-NNN-ATS-MMM-DcnEBfXfrDly3	R	AV	25	25	25	25	25	25	25	25	25	25	25	s	0--3600 Sec
Disconnect from E Before Transfer E-->N Delay #4	LCB#-NNN-ATS-MMM-DcnEBfXfrDly4	R	AV	25	25	25	25	25	25	25	25	25	25	25	s	0--3600 Sec
Disconnect from E Before Transfer E-->N Delay #5	LCB#-NNN-ATS-MMM-DcnEBfXfrDly5	R	AV	25	25	25	25	25	25	25	25	25	25	25	s	0--3600 Sec
Disconnect from E Before Transfer E-->N Delay #6	LCB#-NNN-ATS-MMM-DcnEBfXfrDly6	R	AV	25	25	25	25	25	25	25	25	25	25	25	s	0--3600 Sec
Disconnect from E Before Transfer E-->N Delay #7	LCB#-NNN-ATS-MMM-DcnEBfXfrDly7	R	AV	25	25	25	25	25	25	25	25	25	25	25	s	0--3600 Sec
Disconnect from E Before Transfer E-->N Delay #8	LCB#-NNN-ATS-MMM-DcnEBfXfrDly8	R	AV	25	25	25	25	25	25	25	25	25	25	25	s	0--3600 Sec
Disconnect from E Before Transfer E-->N Delay #9	LCB#-NNN-ATS-MMM-DcnEBfXfrDly9	R	AV	25	25	25	25	25	25	25	25	25	25	25	s	0--3600 Sec
Connect to N After Transfer E-->N Delay #1	LCB#-NNN-ATS-MMM-CnnNAfXfrDly1	R	AV	25	25	25	25	25	25	25	25	25	25	25	s	0--3600 Sec
Connect to N After Transfer E-->N Delay #2	LCB#-NNN-ATS-MMM-CnnNAfXfrDly2	R	AV	25	25	25	25	25	25	25	25	25	25	25	s	0--3600 Sec
Connect to N After Transfer E-->N Delay #3	LCB#-NNN-ATS-MMM-CnnNAfXfrDly3	R	AV	25	25	25	25	25	25	25	25	25	25	25	s	0--3600 Sec
Connect to N After Transfer E-->N Delay #4	LCB#-NNN-ATS-MMM-CnnNAfXfrDly4	R	AV	25	25	25	25	25	25	25	25	25	25	25	s	0--3600 Sec
Connect to N After Transfer E-->N Delay #5	LCB#-NNN-ATS-MMM-CnnNAfXfrDly5	R	AV	25	25	25	25	25	25	25	25	25	25	25	s	0--3600 Sec

BACnet Automatic Transfer Switch Object list (Typical for each Unit)																
Object List	**Mapped Object List**	**Read/ Write**	**Object Type**	**Supply Device**	**Install Device**	**Power Device**	**Wire Device**	**Pgm Device**	**Alarmable**	**Alarm Limit**	**Alarm Type**	**Graphic**	**Trend**	**Com'd**	**Units**	**Description (acceptable value range)**
Connect to N After Transfer E-->N Delay #6	LCB#-NNN-ATS-MMM-CnnNAfXfrDly6	R	AV	25	25	25	25	25	25	25	25	25	25	25	s	0--3600 Sec
Connect to N After Transfer E-->N Delay #7	LCB#-NNN-ATS-MMM-CnnNAfXfrDly7	R	AV	25	25	25	25	25	25	25	25	25	25	25	s	0--3600 Sec
Connect to N After Transfer E-->N Delay #8	LCB#-NNN-ATS-MMM-CnnNAfXfrDly8	R	AV	25	25	25	25	25	25	25	25	25	25	25	s	0--3600 Sec
Connect to N After Transfer E-->N Delay #9	LCB#-NNN-ATS-MMM-CnnNAfXfrDly9	R	AV	25	25	25	25	25	25	25	25	25	25	25	s	0--3600 Sec
Number of Loads to Add to E w/ N-->E	LCB#-NNN-ATS-MMM-NumLdAdENToE	R	AV	25	25	25	25	25	25	25	25	25	25	25		1--9
Number of Loads to Add to N w/ E-->N	LCB#-NNN-ATS-MMM-NumLdAdNEToN	R	AV	25	25	25	25	25	25	25	25	25	25	25		1—9
Common Event Alarms	LCB#-NNN-ATS-MMM-ComEvtAlm	R	AV	25	25	25	25	25	25	25	25	25	25	25		0--12: Msg Code of defined common alarm 13: 0=Not audible alarm; 1 = Audible alarm 14: 0=Not assigned to DCA #2; 1= Assigned to DCA #2 15: 0=Not assigned to DCA #1; 1= Assigned to DCA #1
Enabled / Loaded / Interval Code / Repeat Rate Next Cal. Event	LCB#-NNN-ATS-MMM-EnaLdInvRREvt	R	AV	25	25	25	25	25	25	25	25	25	25	25		0: 0 = Disabled; 1 = Enabled 1: 0 = Unloaded; 1 = Loaded 2--3: Interval Code (00 = DMO; 01 = day; 10 = week; 11 = month) 4--7: Repeat Rate (1--12) 8: 0 = Not Running; 1 = Running (read only)
Start Time Next Cal. Event	LCB#-NNN-ATS-MMM-StTNxtEvt	R	AV	25	25	25	25	25	25	25	25	25	25	25	min	Minutes since midnight
Start Date Next Cal. Event	LCB#-NNN-ATS-MMM-StDtNxtEvt	R	AV	25	25	25	25	25	25	25	25	25	25	25		0--4: Day of Month 5--8: Month of Year 9--15: Year + 2000 (2000--2128)
Run Time Next Cal. Event	LCB#-NNN-ATS-MMM-RunTNxtEvt	R	AV	25	25	25	25	25	25	25	25	25	25	25	min	1--5999 Minutes
Enabled / Loaded / Interval Code / Repeat Rate Exer. Event #1	LCB#-NNN-ATS-MMM-EnaInvRREvt01	R	AV	25	25	25	25	25	25	25	25	25	25	25		0: 0 = Disabled; 1 = Enabled 1: 0 = Unloaded; 1 = Loaded 2--3: Interval Code (00 = DMO; 01 = day; 10 = week; 11 =

BACnet Automatic Transfer Switch Object list (Typical for each Unit)																
Object List	**Mapped Object List**	**Read/ Write**	**Object Type**	**Supply Device**	**Install Device**	**Power Device**	**Wire Device**	**Pgm Device**	**Alarmable**	**Alarm Limit**	**Alarm Type**	**Graphic**	**Trend**	**Com'd**	**Units**	**Description (acceptable value range)**
																month) 4--7: Repeat Rate (1--12) 8: 0 = Not Running; 1 = Running (read only) 9: 0 = N source; 1 = E source (Gen--Gen Only)
Start Time Exer. Event #1	LCB#-NNN-ATS-MMM-StTExeEvt01	R	AV	25	25	25	25	25	25	25	25	25	25	25	min	Minutes since midnight
Start Date Exer. Event #1	LCB#-NNN-ATS-MMM-StDtExeEvt01	R	AV	25	25	25	25	25	25	25	25	25	25	25		0--4: Day of Month 5--8: Month of Year (Jan = 1, Feb = 2,… Dec = 12) 9--15: Year + 2000 (2001--2128)
Run Time Exer. Event #1	LCB#-NNN-ATS-MMM-RunTExeEvt01	R	AV	25	25	25	25	25	25	25	25	25	25	25	min	1--5999 Minutes
Enabled / Loaded / Interval Code / Repeat Rate Exer. Event #2	LCB#-NNN-ATS-MMM-EnaInvRREvt02	R	AV	25	25	25	25	25	25	25	25	25	25	25		0: 0 = Disabled; 1 = Enabled 1: 0 = Unloaded; 1 = Loaded 2--3: Interval Code (00 = DMO; 01 = day; 10 = week; 11 = month) 4--7: Repeat Rate (1--12) 8: 0 = Not Running; 1 = Running (read only) 9: 0 = N source; 1 = E source (Gen--Gen Only)
Start Time Exer. Event #2	LCB#-NNN-ATS-MMM-StTExeEvt02	R	AV	25	25	25	25	25	25	25	25	25	25	25	min	Minutes since midnight
Start Date Exer. Event #2	LCB#-NNN-ATS-MMM-StDtExeEvt02	R	AV	25	25	25	25	25	25	25	25	25	25	25		0--4: Day of Month 5--8: Month of Year (Jan = 1, Feb = 2,… Dec = 12) 9--15: Year + 2000 (2001--2128)
Run Time Exer. Event #2	LCB#-NNN-ATS-MMM-RunTExeEvt02	R	AV	25	25	25	25	25	25	25	25	25	25	25	min	1--5999 Minutes
Enabled / Loaded / Interval Code / Repeat Rate Exer. Event #3	LCB#-NNN-ATS-MMM-EnaInvRREvt03	R	AV	25	25	25	25	25	25	25	25	25	25	25		0: 0 = Disabled; 1 = Enabled 1: 0 = Unloaded; 1 = Loaded 2--3: Interval Code (00 = DMO; 01 = day; 10 = week; 11 = month) 4--7: Repeat Rate (1--12) 8: 0 = Not Running; 1 = Running (read only) 9: 0 = N source; 1 = E source (Gen--Gen Only)
Start Time Exer. Event #3	LCB#-NNN-ATS-MMM-StTExeEvt03	R	AV	25	25	25	25	25	25	25	25	25	25	25	min	Minutes since midnight

BACnet Automatic Transfer Switch Object list (Typical for each Unit)																
Object List	**Mapped Object List**	**Read/ Write**	**Object Type**	**Supply Device**	**Install Device**	**Power Device**	**Wire Device**	**Pgm Device**	**Alarmable**	**Alarm Limit**	**Alarm Type**	**Graphic**	**Trend**	**Com'd**	**Units**	**Description (acceptable value range)**
Start Date Exer. Event #3	LCB#-NNN-ATS-MMM-StDtExeEvt03	R	AV	25	25	25	25	25	25	25	25	25	25	25		0--4: Day of Month 5--8: Month of Year (Jan = 1, Feb = 2,… Dec = 12) 9--15: Year + 2000 (2001--2128)
Run Time Exer. Event #3	LCB#-NNN-ATS-MMM-RunTExeEvt03	R	AV	25	25	25	25	25	25	25	25	25	25	25	min	1--5999 Minutes
Enabled / Loaded / Interval Code / Repeat Rate Exer. Event #4	LCB#-NNN-ATS-MMM-EnaInvRREvt04	R	AV	25	25	25	25	25	25	25	25	25	25	25		0: 0 = Disabled; 1 = Enabled 1: 0 = Unloaded; 1 = Loaded 2--3: Interval Code (00 = DMO; 01 = day; 10 = week; 11 = month) 4--7: Repeat Rate (1--12) 8: 0 = Not Running; 1 = Running (read only) 9: 0 = N source; 1 = E source (Gen--Gen Only)
Start Time Exer. Event #4	LCB#-NNN-ATS-MMM-StTExeEvt04	R	AV	25	25	25	25	25	25	25	25	25	25	25	min	Minutes since midnight
Start Date Exer. Event #4	LCB#-NNN-ATS-MMM-StDtExeEvt04	R	AV	25	25	25	25	25	25	25	25	25	25	25		0--4: Day of Month 5--8: Month of Year (Jan = 1, Feb = 2,… Dec = 12) 9--15: Year + 2000 (2001--2128)
Run Time Exer. Event #4	LCB#-NNN-ATS-MMM-RunTExeEvt04	R	AV	25	25	25	25	25	25	25	25	25	25	25	min	1--5999 Minutes
Enabled / Loaded / Interval Code / Repeat Rate Exer. Event #5	LCB#-NNN-ATS-MMM-EnaInvRREvt05	R	AV	25	25	25	25	25	25	25	25	25	25	25		0: 0 = Disabled; 1 = Enabled 1: 0 = Unloaded; 1 = Loaded 2--3: Interval Code (00 = DMO; 01 = day; 10 = week; 11 = month) 4--7: Repeat Rate (1--12) 8: 0 = Not Running; 1 = Running (read only) 9: 0 = N source; 1 = E source (Gen--Gen Only)
Start Time Exer. Event #5	LCB#-NNN-ATS-MMM-StTExeEvt05	R	AV	25	25	25	25	25	25	25	25	25	25	25	min	Minutes since midnight
Start Date Exer. Event #5	LCB#-NNN-ATS-MMM-StDtExeEvt05	R	AV	25	25	25	25	25	25	25	25	25	25	25		0--4: Day of Month 5--8: Month of Year (Jan = 1, Feb = 2,… Dec = 12) 9--15: Year + 2000 (2001--2128)
Run Time Exer. Event #5	LCB#-NNN-ATS-MMM-RunTExeEvt05	R	AV	25	25	25	25	25	25	25	25	25	25	25	min	1--5999 Minutes

BACnet Automatic Transfer Switch Object list (Typical for each Unit)																
Object List	**Mapped Object List**	**Read/ Write**	**Object Type**	**Supply Device**	**Install Device**	**Power Device**	**Wire Device**	**Pgm Device**	**Alarmable**	**Alarm Limit**	**Alarm Type**	**Graphic**	**Trend**	**Com'd**	**Units**	**Description (acceptable value range)**
Enabled / Loaded / Interval Code / Repeat Rate Exer. Event #6	LCB#-NNN-ATS-MMM-EnaInvRREvt06	R	AV	25	25	25	25	25	25	25	25	25	25	25		0: 0 = Disabled; 1 = Enabled 1: 0 = Unloaded; 1 = Loaded 2--3: Interval Code (00 = DMO; 01 = day; 10 = week; 11 = month) 4--7: Repeat Rate (1--12) 8: 0 = Not Running; 1 = Running (read only) 9: 0 = N source; 1 = E source (Gen--Gen Only)
Start Time Exer. Event #6	LCB#-NNN-ATS-MMM-StTExeEvt06	R	AV	25	25	25	25	25	25	25	25	25	25	25	min	Minutes since midnight
Start Date Exer. Event #6	LCB#-NNN-ATS-MMM-StDtExeEvt06	R	AV	25	25	25	25	25	25	25	25	25	25	25		0--4: Day of Month 5--8: Month of Year (Jan = 1, Feb = 2,… Dec = 12) 9--15: Year + 2000 (2001--2128)
Run Time Exer. Event #6	LCB#-NNN-ATS-MMM-RunTExeEvt06	R	AV	25	25	25	25	25	25	25	25	25	25	25	min	1--5999 Minutes
Enabled / Loaded / Interval Code / Repeat Rate Exer. Event #7	LCB#-NNN-ATS-MMM-EnaInvRREvt07	R	AV	25	25	25	25	25	25	25	25	25	25	25		0: 0 = Disabled; 1 = Enabled 1: 0 = Unloaded; 1 = Loaded 2--3: Interval Code (00 = DMO; 01 = day; 10 = week; 11 = month) 4--7: Repeat Rate (1--12) 8: 0 = Not Running; 1 = Running (read only) 9: 0 = N source; 1 = E source (Gen--Gen Only)
Start Time Exer. Event #7	LCB#-NNN-ATS-MMM-StTExeEvt07	R	AV	25	25	25	25	25	25	25	25	25	25	25	min	Minutes since midnight
Start Date Exer. Event #7	LCB#-NNN-ATS-MMM-StDtExeEvt07	R	AV	25	25	25	25	25	25	25	25	25	25	25		0--4: Day of Month 5--8: Month of Year (Jan = 1, Feb = 2,… Dec = 12) 9--15: Year + 2000 (2001--2128)
Run Time Exer. Event #7	LCB#-NNN-ATS-MMM-RunTExeEvt07	R	AV	25	25	25	25	25	25	25	25	25	25	25	min	1--5999 Minutes
Enabled / Loaded / Interval Code / Repeat Rate Exer. Event #8	LCB#-NNN-ATS-MMM-EnaInvRREvt08	R	AV	25	25	25	25	25	25	25	25	25	25	25		0: 0 = Disabled; 1 = Enabled 1: 0 = Unloaded; 1 = Loaded 2--3: Interval Code (00 = DMO; 01 = day; 10 = week; 11 = month) 4--7: Repeat Rate (1--12) 8: 0 = Not Running; 1 = Running (read only) 9: 0 = N source; 1 = E source (Gen--Gen Only)

BACnet Automatic Transfer Switch Object list (Typical for each Unit)																
Object List	**Mapped Object List**	**Read/ Write**	**Object Type**	**Supply Device**	**Install Device**	**Power Device**	**Wire Device**	**Pgm Device**	**Alarmable**	**Alarm Limit**	**Alarm Type**	**Graphic**	**Trend**	**Com'd**	**Units**	**Description (acceptable value range)**
Start Time Exer. Event #8	LCB#-NNN-ATS-MMM-StTExeEvt08	R	AV	25	25	25	25	25	25	25	25	25	25	25	min	Minutes since midnight
Start Date Exer. Event #8	LCB#-NNN-ATS-MMM-StDtExeEvt08	R	AV	25	25	25	25	25	25	25	25	25	25	25		0--4: Day of Month 5--8: Month of Year (Jan = 1, Feb = 2,… Dec = 12) 9--15: Year + 2000 (2001--2128)
Run Time Exer. Event #8	LCB#-NNN-ATS-MMM-RunTExeEvt08	R	AV	25	25	25	25	25	25	25	25	25	25	25	min	1--5999 Minutes
Enabled / Loaded / Interval Code / Repeat Rate Exer. Event #9	LCB#-NNN-ATS-MMM-EnaInvRREvt09	R	AV	25	25	25	25	25	25	25	25	25	25	25		0: 0 = Disabled; 1 = Enabled 1: 0 = Unloaded; 1 = Loaded 2--3: Interval Code (00 = DMO; 01 = day; 10 = week; 11 = month) 4--7: Repeat Rate (1--12) 8: 0 = Not Running; 1 = Running (read only) 9: 0 = N source; 1 = E source (Gen--Gen Only)
Start Time Exer. Event #9	LCB#-NNN-ATS-MMM-StTExeEvt09	R	AV	25	25	25	25	25	25	25	25	25	25	25	min	Minutes since midnight
Start Date Exer. Event #9	LCB#-NNN-ATS-MMM-StDtExeEvt09	R	AV	25	25	25	25	25	25	25	25	25	25	25		0--4: Day of Month 5--8: Month of Year (Jan = 1, Feb = 2,… Dec = 12) 9--15: Year + 2000 (2001--2128)
Run Time Exer. Event #9	LCB#-NNN-ATS-MMM-RunTExeEvt09	R	AV	25	25	25	25	25	25	25	25	25	25	25	min	1--5999 Minutes
Enabled / Loaded / Interval Code / Repeat Rate Exer. Event #10	LCB#-NNN-ATS-MMM-EnaInvRREvt10	R	AV	25	25	25	25	25	25	25	25	25	25	25		0: 0 = Disabled; 1 = Enabled 1: 0 = Unloaded; 1 = Loaded 2--3: Interval Code (00 = DMO; 01 = day; 10 = week; 11 = month) 4--7: Repeat Rate (1--12) 8: 0 = Not Running; 1 = Running (read only) 9: 0 = N source; 1 = E source (Gen--Gen Only)
Start Time Exer. Event #10	LCB#-NNN-ATS-MMM-StTExeEvt10	R	AV	25	25	25	25	25	25	25	25	25	25	25	min	Minutes since midnight
Start Date Exer. Event #10	LCB#-NNN-ATS-MMM-StDtExeEvt10	R	AV	25	25	25	25	25	25	25	25	25	25	25		0--4: Day of Month 5--8: Month of Year (Jan = 1, Feb = 2,… Dec = 12) 9--15: Year + 2000 (2001--2128)
Run Time Exer. Event #10	LCB#-NNN-ATS-MMM-RunTExeEvt1	R	AV	25	25	25	25	25	25	25	25	25	25	25	min	1--5999 Minutes

BACnet Automatic Transfer Switch Object list (Typical for each Unit)																
Object List	**Mapped Object List**	**Read/ Write**	**Object Type**	**Supply Device**	**Install Device**	**Power Device**	**Wire Device**	**Pgm Device**	**Alarmable**	**Alarm Limit**	**Alarm Type**	**Graphic**	**Trend**	**Com'd**	**Units**	**Description (acceptable value range)**
	0															
Enabled / Loaded / Interval Code / Repeat Rate Exer. Event #11	LCB#-NNN-ATS-MMM-EnaInvRREvt11	R	AV	25	25	25	25	25	25	25	25	25	25	25		0: 0 = Disabled; 1 = Enabled 1: 0 = Unloaded; 1 = Loaded 2--3: Interval Code (00 = DMO; 01 = day; 10 = week; 11 = month) 4--7: Repeat Rate (1--12) 8: 0 = Not Running; 1 = Running (read only) 9: 0 = N source; 1 = E source (Gen--Gen Only)
Start Time Exer. Event #11	LCB#-NNN-ATS-MMM-StTExeEvt11	R	AV	25	25	25	25	25	25	25	25	25	25	25	min	Minutes since midnight
Start Date Exer. Event #11	LCB#-NNN-ATS-MMM-StDtExeEvt11	R	AV	25	25	25	25	25	25	25	25	25	25	25		0--4: Day of Month 5--8: Month of Year (Jan = 1, Feb = 2,… Dec = 12) 9--15: Year + 2000 (2001--2128)
Run Time Exer. Event #11	LCB#-NNN-ATS-MMM-RunTExeEvt11	R	AV	25	25	25	25	25	25	25	25	25	25	25	min	1--5999 Minutes
Enabled / Loaded / Interval Code / Repeat Rate Exer. Event #12	LCB#-NNN-ATS-MMM-EnaInvRREvt12	R	AV	25	25	25	25	25	25	25	25	25	25	25		0: 0 = Disabled; 1 = Enabled 1: 0 = Unloaded; 1 = Loaded 2--3: Interval Code (00 = DMO; 01 = day; 10 = week; 11 = month) 4--7: Repeat Rate (1--12) 8: 0 = Not Running; 1 = Running (read only) 9: 0 = N source; 1 = E source (Gen--Gen Only)
Start Time Exer. Event #12	LCB#-NNN-ATS-MMM-StTExeEvt12	R	AV	25	25	25	25	25	25	25	25	25	25	25	min	Minutes since midnight
Start Date Exer. Event #12	LCB#-NNN-ATS-MMM-StDtExeEvt12	R	AV	25	25	25	25	25	25	25	25	25	25	25		0--4: Day of Month 5--8: Month of Year (Jan = 1, Feb = 2,… Dec = 12) 9--15: Year + 2000 (2001--2128)
Run Time Exer. Event #12	LCB#-NNN-ATS-MMM-RunTExeEvt12	R	AV	25	25	25	25	25	25	25	25	25	25	25	min	1--5999 Minutes
Enabled / Loaded / Interval Code / Repeat Rate Exer. Event #13	LCB#-NNN-ATS-MMM-EnaInvRREvt13	R	AV	25	25	25	25	25	25	25	25	25	25	25		0: 0 = Disabled; 1 = Enabled 1: 0 = Unloaded; 1 = Loaded 2--3: Interval Code (00 = DMO; 01 = day; 10 = week; 11 = month) 4--7: Repeat Rate (1--12) 8: 0 = Not Running; 1 = Running

BACnet Automatic Transfer Switch Object list (Typical for each Unit)																
Object List	**Mapped Object List**	**Read/ Write**	**Object Type**	**Supply Device**	**Install Device**	**Power Device**	**Wire Device**	**Pgm Device**	**Alarmable**	**Alarm Limit**	**Alarm Type**	**Graphic**	**Trend**	**Com'd**	**Units**	**Description (acceptable value range)**
																(read only) 9: 0 = N source; 1 = E source (Gen--Gen Only)
Start Time Exer. Event #13	LCB#-NNN-ATS-MMM-StTExeEvt13	R	AV	25	25	25	25	25	25	25	25	25	25	25	min	Minutes since midnight
Start Date Exer. Event #13	LCB#-NNN-ATS-MMM-StDtExeEvt13	R	AV	25	25	25	25	25	25	25	25	25	25	25		0--4: Day of Month 5--8: Month of Year (Jan = 1, Feb = 2,… Dec = 12) 9--15: Year + 2000 (2001--2128)
Run Time Exer. Event #13	LCB#-NNN-ATS-MMM-RunTExeEvt13	R	AV	25	25	25	25	25	25	25	25	25	25	25	min	1--5999 Minutes
Enabled / Loaded / Interval Code / Repeat Rate Exer. Event #14	LCB#-NNN-ATS-MMM-EnaInvRREvt14	R	AV	25	25	25	25	25	25	25	25	25	25	25		0: 0 = Disabled; 1 = Enabled 1: 0 = Unloaded; 1 = Loaded 2--3: Interval Code (00 = DMO; 01 = day; 10 = week; 11 = month) 4--7: Repeat Rate (1--12) 8: 0 = Not Running; 1 = Running (read only) 9: 0 = N source; 1 = E source (Gen--Gen Only)
Start Time Exer. Event #14	LCB#-NNN-ATS-MMM-StTExeEvt14	R	AV	25	25	25	25	25	25	25	25	25	25	25	min	Minutes since midnight
Start Date Exer. Event #14	LCB#-NNN-ATS-MMM-StDtExeEvt14	R	AV	25	25	25	25	25	25	25	25	25	25	25		0--4: Day of Month 5--8: Month of Year (Jan = 1, Feb = 2,… Dec = 12) 9--15: Year + 2000 (2001--2128)
Run Time Exer. Event #14	LCB#-NNN-ATS-MMM-RunTExeEvt14	R	AV	25	25	25	25	25	25	25	25	25	25	25	min	1--5999 Minutes
Enabled / Loaded / Interval Code / Repeat Rate Exer. Event #15	LCB#-NNN-ATS-MMM-EnaInvRREvt15	R	AV	25	25	25	25	25	25	25	25	25	25	25		0: 0 = Disabled; 1 = Enabled 1: 0 = Unloaded; 1 = Loaded 2--3: Interval Code (00 = DMO; 01 = day; 10 = week; 11 = month) 4--7: Repeat Rate (1--12) 8: 0 = Not Running; 1 = Running (read only) 9: 0 = N source; 1 = E source (Gen--Gen Only)
Start Time Exer. Event #15	LCB#-NNN-ATS-MMM-StTExeEvt15	R	AV	25	25	25	25	25	25	25	25	25	25	25	min	Minutes since midnight
Start Date Exer. Event #15	LCB#-NNN-ATS-MMM-StDtExeEvt15	R	AV	25	25	25	25	25	25	25	25	25	25	25		0--4: Day of Month 5--8: Month of Year (Jan = 1, Feb = 2,… Dec = 12) 9--15: Year + 2000 (2001--2128)

BACnet Automatic Transfer Switch Object list (Typical for each Unit)																
Object List	**Mapped Object List**	**Read/ Write**	**Object Type**	**Supply Device**	**Install Device**	**Power Device**	**Wire Device**	**Pgm Device**	**Alarmable**	**Alarm Limit**	**Alarm Type**	**Graphic**	**Trend**	**Com'd**	**Units**	**Description (acceptable value range)**
Run Time Exer. Event #15	LCB#-NNN-ATS-MMM-RunTExeEvt15	R	AV	25	25	25	25	25	25	25	25	25	25	25	min	1--5999 Minutes
Enabled / Loaded / Interval Code / Repeat Rate Exer. Event #16	LCB#-NNN-ATS-MMM-EnaInvRREvt16	R	AV	25	25	25	25	25	25	25	25	25	25	25		0: 0 = Disabled; 1 = Enabled 1: 0 = Unloaded; 1 = Loaded 2--3: Interval Code (00 = DMO; 01 = day; 10 = week; 11 = month) 4--7: Repeat Rate (1--12) 8: 0 = Not Running; 1 = Running (read only) 9: 0 = N source; 1 = E source (Gen--Gen Only)
Start Time Exer. Event #16	LCB#-NNN-ATS-MMM-StTExeEvt16	R	AV	25	25	25	25	25	25	25	25	25	25	25	min	Minutes since midnight
Start Date Exer. Event #16	LCB#-NNN-ATS-MMM-StDtExeEvt16	R	AV	25	25	25	25	25	25	25	25	25	25	25		0--4: Day of Month 5--8: Month of Year (Jan = 1, Feb = 2,… Dec = 12) 9--15: Year + 2000 (2001--2128)
Run Time Exer. Event #16	LCB#-NNN-ATS-MMM-RunTExeEvt16	R	AV	25	25	25	25	25	25	25	25	25	25	25	min	1--5999 Minutes
Enabled / Loaded / Interval Code / Repeat Rate Exer. Event #17	LCB#-NNN-ATS-MMM-EnaInvRREvt17	R	AV	25	25	25	25	25	25	25	25	25	25	25		0: 0 = Disabled; 1 = Enabled 1: 0 = Unloaded; 1 = Loaded 2--3: Interval Code (00 = DMO; 01 = day; 10 = week; 11 = month) 4--7: Repeat Rate (1--12) 8: 0 = Not Running; 1 = Running (read only) 9: 0 = N source; 1 = E source (Gen--Gen Only)
Start Time Exer. Event #17	LCB#-NNN-ATS-MMM-StTExeEvt17	R	AV	25	25	25	25	25	25	25	25	25	25	25	min	Minutes since midnight
Start Date Exer. Event #17	LCB#-NNN-ATS-MMM-StDtExeEvt17	R	AV	25	25	25	25	25	25	25	25	25	25	25		0--4: Day of Month 5--8: Month of Year (Jan = 1, Feb = 2,… Dec = 12) 9--15: Year + 2000 (2001--2128)
Run Time Exer. Event #17	LCB#-NNN-ATS-MMM-RunTExeEvt17	R	AV	25	25	25	25	25	25	25	25	25	25	25	min	1--5999 Minutes
Enabled / Loaded / Interval Code / Repeat Rate Exer. Event #18	LCB#-NNN-ATS-MMM-EnaInvRREvt18	R	AV	25	25	25	25	25	25	25	25	25	25	25		0: 0 = Disabled; 1 = Enabled 1: 0 = Unloaded; 1 = Loaded 2--3: Interval Code (00 = DMO; 01 = day; 10 = week; 11 = month) 4--7: Repeat Rate (1--12) 8: 0 = Not

BACnet Automatic Transfer Switch Object list (Typical for each Unit)																
Object List	**Mapped Object List**	**Read/ Write**	**Object Type**	**Supply Device**	**Install Device**	**Power Device**	**Wire Device**	**Pgm Device**	**Alarmable**	**Alarm Limit**	**Alarm Type**	**Graphic**	**Trend**	**Com'd**	**Units**	**Description (acceptable value range)**
																Running; 1 = Running (read only) 9: 0 = N source; 1 = E source (Gen--Gen Only)
Start Time Exer. Event #18	LCB#-NNN-ATS-MMM-StTExeEvt18	R	AV	25	25	25	25	25	25	25	25	25	25	25	min	Minutes since midnight
Start Date Exer. Event #18	LCB#-NNN-ATS-MMM-StDtExeEvt18	R	AV	25	25	25	25	25	25	25	25	25	25	25		0--4: Day of Month 5--8: Month of Year (Jan = 1, Feb = 2,… Dec = 12) 9--15: Year + 2000 (2001--2128)
Run Time Exer. Event #18	LCB#-NNN-ATS-MMM-RunTExeEvt18	R	AV	25	25	25	25	25	25	25	25	25	25	25	min	1--5999 Minutes
Enabled / Loaded / Interval Code / Repeat Rate Exer. Event #19	LCB#-NNN-ATS-MMM-EnaInvRREvt19	R	AV	25	25	25	25	25	25	25	25	25	25	25		0: 0 = Disabled; 1 = Enabled 1: 0 = Unloaded; 1 = Loaded 2--3: Interval Code (00 = DMO; 01 = day; 10 = week; 11 = month) 4--7: Repeat Rate (1--12) 8: 0 = Not Running; 1 = Running (read only) 9: 0 = N source; 1 = E source (Gen--Gen Only)
Start Time Exer. Event #19	LCB#-NNN-ATS-MMM-StTExeEvt19	R	AV	25	25	25	25	25	25	25	25	25	25	25	min	Minutes since midnight
Start Date Exer. Event #19	LCB#-NNN-ATS-MMM-StDtExeEvt19	R	AV	25	25	25	25	25	25	25	25	25	25	25		0--4: Day of Month 5--8: Month of Year (Jan = 1, Feb = 2,… Dec = 12) 9--15: Year + 2000 (2001--2128)
Run Time Exer. Event #19	LCB#-NNN-ATS-MMM-RunTExeEvt19	R	AV	25	25	25	25	25	25	25	25	25	25	25	min	1--5999 Minutes
Enabled / Loaded / Interval Code / Repeat Rate Exer. Event #20	LCB#-NNN-ATS-MMM-EnaInvRREvt20	R	AV	25	25	25	25	25	25	25	25	25	25	25		0: 0 = Disabled; 1 = Enabled 1: 0 = Unloaded; 1 = Loaded 2--3: Interval Code (00 = DMO; 01 = day; 10 = week; 11 = month) 4--7: Repeat Rate (1--12) 8: 0 = Not Running; 1 = Running (read only) 9: 0 = N source; 1 = E source (Gen--Gen Only)
Start Time Exer. Event #20	LCB#-NNN-ATS-MMM-StTExeEvt20	R	AV	25	25	25	25	25	25	25	25	25	25	25	min	Minutes since midnight
Start Date Exer. Event #20	LCB#-NNN-ATS-MMM-StDtExeEvt20	R	AV	25	25	25	25	25	25	25	25	25	25	25		0--4: Day of Month 5--8: Month of Year (Jan = 1, Feb = 2,… Dec = 12) 9--15: Year + 2000 (2001--

BACnet Automatic Transfer Switch Object list (Typical for each Unit)																
Object List	**Mapped Object List**	**Read/ Write**	**Object Type**	**Supply Device**	**Install Device**	**Power Device**	**Wire Device**	**Pgm Device**	**Alarmable**	**Alarm Limit**	**Alarm Type**	**Graphic**	**Trend**	**Com'd**	**Units**	**Description (acceptable value range)**
																2128)
Run Time Exer. Event #20	LCB#-NNN-ATS-MMM-RunTExeEvt20	R	AV	25	25	25	25	25	25	25	25	25	25	25	min	1--5999 Minutes
Enabled / Loaded / Interval Code / Repeat Rate Exer. Event #21	LCB#-NNN-ATS-MMM-EnaInvRREvt21	R	AV	25	25	25	25	25	25	25	25	25	25	25		0: 0 = Disabled; 1 = Enabled 1: 0 = Unloaded; 1 = Loaded 2--3: Interval Code (00 = DMO; 01 = day; 10 = week; 11 = month) 4--7: Repeat Rate (1--12) 8: 0 = Not Running; 1 = Running (read only) 9: 0 = N source; 1 = E source (Gen--Gen Only)
Start Time Exer. Event #21	LCB#-NNN-ATS-MMM-StTExeEvt21	R	AV	25	25	25	25	25	25	25	25	25	25	25	min	Minutes since midnight
Start Date Exer. Event #21	LCB#-NNN-ATS-MMM-StDtExeEvt21	R	AV	25	25	25	25	25	25	25	25	25	25	25		0--4: Day of Month 5--8: Month of Year (Jan = 1, Feb = 2,… Dec = 12) 9--15: Year + 2000 (2001--2128)
Run Time Exer. Event #21	LCB#-NNN-ATS-MMM-RunTExeEvt21	R	AV	25	25	25	25	25	25	25	25	25	25	25	min	1--5999 Minutes
Last Outage Time	LCB#-NNN-ATS-MMM-LstOtgT	R	AV	25	25	25	25	25	25	25	25	25	25	25	min	Minutes since midnight
Last Outage Date	LCB#-NNN-ATS-MMM-LstOtgDt	R	AV	25	25	25	25	25	25	25	25	25	25	25		0--4: Day of Month 5--8: Month of Year 9--15: Year + 2000 (2000--2128)
Duration of Last Outage	LCB#-NNN-ATS-MMM-LstOtgDur	R	AV	25	25	25	25	25	25	25	25	25	25	25	min	Minutes
Designation	LCB#-NNN-ATS-MMM-Designation	R	AV	25	25	25	25	25	25	25	25	25	25	25		20 ASCII characters
Load Description	LCB#-NNN-ATS-MMM-LoadDes	R	AV	25	25	25	25	25	25	25	25	25	25	25		20 ASCII characters
Branch Description	LCB#-NNN-ATS-MMM-BncDes	R	AV	25	25	25	25	25	25	25	25	25	25	25		20 ASCII characters
Location	LCB#-NNN-ATS-MMM-Location	R	AV	25	25	25	25	25	25	25	25	25	25	25		20 ASCII characters
ATS Serial Number	LCB#-NNN-ATS-MMM-ATSSrlNum	R	AV	25	25	25	25	25	25	25	25	25	25	25		10 ASCII characters

BACnet Automatic Transfer Switch Object list (Typical for each Unit)																
Object List	**Mapped Object List**	**Read/ Write**	**Object Type**	**Supply Device**	**Install Device**	**Power Device**	**Wire Device**	**Pgm Device**	**Alarmable**	**Alarm Limit**	**Alarm Type**	**Graphic**	**Trend**	**Com'd**	**Units**	**Description (acceptable value range)**
Password for registers 41150--41154	LCB#-NNN-ATS-MMM-Pwd41150To54	R	AV	25	25	25	25	25	25	25	25	25	25	25		0 -- 32768
Controller Serial Number (FACTORY ONLY)	LCB#-NNN-ATS-MMM-CtlrSrlNum	R	AV	25	25	25	25	25	25	25	25	25	25	25		10 ASCII characters
Password for registers 41156--41160	LCB#-NNN-ATS-MMM-Pwd41156To60	R	AV	25	25	25	25	25	25	25	25	25	25	25		0 -- 32768 (FACTORY ONLY)
Contactor Serial Number	LCB#-NNN-ATS-MMM-CnrSrlNum	R	AV	25	25	25	25	25	25	25	25	25	25	25		10 ASCII characters
Password for registers 41162--41166	LCB#-NNN-ATS-MMM-Pwd41162To66	R	AV	25	25	25	25	25	25	25	25	25	25	25		0 -- 32768
1500 Code Revision	LCB#-NNN-ATS-MMM-1500CodRev	R	AV	25	25	25	25	25	25	25	25	25	25	25		0--7: Minor Version 8--15: Major Version
FPGA Revision	LCB#-NNN-ATS-MMM-FPGARev	R	AV	25	25	25	25	25	25	25	25	25	25	25		0--7: Minor Version
MAC Address (least significant bits only)	LCB#-NNN-ATS-MMM-MACAdr	R	AV	25	25	25	25	25	25	25	25	25	25	25		Bits 0--14 only
Time	LCB#-NNN-ATS-MMM-CurrentTime	R	AV	25	25	25	25	25	25	25	25	25	25	25	min	Minutes since midnight
Date (day)	LCB#-NNN-ATS-MMM-CurrentDay	R	AV	25	25	25	25	25	25	25	25	25	25	25		0--4: Day of Month
Date (month)	LCB#-NNN-ATS-MMM-CurrentMonth	R	AV	25	25	25	25	25	25	25	25	25	25	25		5--8: Month of Year (Jan = 1, Feb = 2,… Dec = 12)
Date (year)	LCB#-NNN-ATS-MMM-CurrentYear	R	AV	25	25	25	25	25	25	25	25	25	25	25		9--15: Year + 2000 (2001--2128)
Adjust for daylight savings time	LCB#-NNN-ATS-MMM-AdjDST	R	AV	25	25	25	25	25	25	25	25	25	25	25		0: 0 = do not adjust; 1 = adjust
Date to move clock forward (day of week)	LCB#-NNN-ATS-MMM-DSTStDayOfWk	R	AV	25	25	25	25	25	25	25	25	25	25	25		0--2: Day of Month (Sun = 0, Mon = 1, … Sat = 6)
Date to move clock forward (month)	LCB#-NNN-ATS-MMM-DSTStMth	R	AV	25	25	25	25	25	25	25	25	25	25	25		3--6: Month of Year (Jan = 1, Feb = 2, … Dec = 12)
Date to move clock forward (week of month)	LCB#-NNN-ATS-MMM-DSTStWkOfMth	R	AV	25	25	25	25	25	25	25	25	25	25	25		7--9: Week of Month (1 -- 4 only)

BACnet Automatic Transfer Switch Object list (Typical for each Unit)																
Object List	**Mapped Object List**	**Read/ Write**	**Object Type**	**Supply Device**	**Install Device**	**Power Device**	**Wire Device**	**Pgm Device**	**Alarmable**	**Alarm Limit**	**Alarm Type**	**Graphic**	**Trend**	**Com'd**	**Units**	**Description (acceptable value range)**
Date to move clock backward (day of week)	LCB#-NNN-ATS-MMM-DSTStpDayOfWk	R	AV	25	25	25	25	25	25	25	25	25	25	25		0--2: Day of Month (Sun = 0, Mon = 1, … Sat = 6)
Date to move clock backward (month)	LCB#-NNN-ATS-MMM-DSTStpMth	R	AV	25	25	25	25	25	25	25	25	25	25	25		3--6: Month of Year (Jan = 1, Feb = 2, … Dec = 12)
Date to move clock backward (week of month)	LCB#-NNN-ATS-MMM-DSTStpWkOfMth	R	AV	25	25	25	25	25	25	25	25	25	25	25		7--9: Week of Month (1 -- 4 only)
Minutes not in Preferred Total	LCB#-NNN-ATS-MMM-MntNIncPfdTot	R	AV	25	25	25	25	25	25	25	25	25	25	25	min	minutes (most significant word first)
Minutes not in Preferred since Reset	LCB#-NNN-ATS-MMM-MntNIncPfdRst	R	AV	25	25	25	25	25	25	25	25	25	25	25	min	minutes (most significant word first)
Minutes in Standby Total	LCB#-NNN-ATS-MMM-MntIncSbyTot	R	AV	25	25	25	25	25	25	25	25	25	25	25	min	minutes (most significant word first)
Minutes in Standby since Reset	LCB#-NNN-ATS-MMM-MntIncSbyRst	R	AV	25	25	25	25	25	25	25	25	25	25	25	min	minutes (most significant word first)
Minutes of Operation Total	LCB#-NNN-ATS-MMM-MntOpTot	R	AV	25	25	25	25	25	25	25	25	25	25	25	min	minutes (most significant word first)
Minutes of Operation since Reset	LCB#-NNN-ATS-MMM-MntOpRst	R	AV	25	25	25	25	25	25	25	25	25	25	25	min	minutes (most significant word first)
Switch Transfers Total	LCB#-NNN-ATS-MMM-SwtXfrTot	R	AV	25	25	25	25	25	25	25	25	25	25	25		
Switch Transfers since Reset	LCB#-NNN-ATS-MMM-SwtXfrRst	R	AV	25	25	25	25	25	25	25	25	25	25	25		
Failures to Transfer Total	LCB#-NNN-ATS-MMM-FrToXfrTot	R	AV	25	25	25	25	25	25	25	25	25	25	25		
Failures to Transfer since Reset	LCB#-NNN-ATS-MMM-FrToXfrRst	R	AV	25	25	25	25	25	25	25	25	25	25	25		
Loss of Preferred Transfers Total	LCB#-NNN-ATS-MMM-LsPfdXfrTot	R	AV	25	25	25	25	25	25	25	25	25	25	25		
Loss of Preferred Transfers since Reset	LCB#-NNN-ATS-MMM-LsPfdXfrRst	R	AV	25	25	25	25	25	25	25	25	25	25	25		
Transfer Time N-->E	LCB#-NNN-ATS-MMM-XfrTNToE	R	AV	25	25	25	25	25	25	25	25	25	25	25	ms	milliseconds
Transfer Time E-->N	LCB#-NNN-ATS-MMM-XfrTEToN	R	AV	25	25	25	25	25	25	25	25	25	25	25	ms	milliseconds

BACnet Automatic Transfer Switch Object list (Typical for each Unit)																
Object List	**Mapped Object List**	**Read/ Write**	**Object Type**	**Supply Device**	**Install Device**	**Power Device**	**Wire Device**	**Pgm Device**	**Alarmable**	**Alarm Limit**	**Alarm Type**	**Graphic**	**Trend**	**Com'd**	**Units**	**Description (acceptable value range)**
Last Maintenance Date	LCB#-NNN-ATS-MMM-LstMtnDay	R	AV	25	25	25	25	25	25	25	25	25	25	25		0--4: Day of Month 5--8: Month of Year (Jan = 1, Feb = 2,… Dec = 12) 9--15: Year + 2000 (2001--2128)
Maintenance/Test and Manual Operations	LCB#-NNN-ATS-MMM-MtnTsManOp	R	AV	25	25	25	25	25	25	25	25	25	25	25		0: Reset Maintenance Records 1: Start Peak Shave 2: End Peak Shave 3: Start Remote Loaded Test 4: Start Remote Unloaded Test 5: Reserved for future use (always 0) 6: End Remote Test 7: Force Transfer to OFF 8: Resume Program Trans. Operation 9: End Current Time Delay
Auto--Load Run Time	LCB#-NNN-ATS-MMM-AutLdRunT	R	AV	25	25	25	25	25	25	25	25	25	25	25	min	Minutes (sending any non--zero value starts test)
Clear Event Log	LCB#-NNN-ATS-MMM-CleEvtLog	R	AV	25	25	25	25	25	25	25	25	25	25	25		0: 1=Clear Log
Events 0 -- 19	LCB#-NNN-ATS-MMM-Evt00To19	R	AV	25	25	25	25	25	25	25	25	25	25	25		Time, Date, Code, Param1, Param2
Events 20 -- 39	LCB#-NNN-ATS-MMM-Evt20To39	R	AV	25	25	25	25	25	25	25	25	25	25	25		Time, Date, Code, Param1, Param2
Events 40 -- 59	LCB#-NNN-ATS-MMM-Evt40To59	R	AV	25	25	25	25	25	25	25	25	25	25	25		Time, Date, Code, Param1, Param2
Events 60 -- 79	LCB#-NNN-ATS-MMM-Evt60To79	R	AV	25	25	25	25	25	25	25	25	25	25	25		Time, Date, Code, Param1, Param2
Events 80 -- 99	LCB#-NNN-ATS-MMM-Evt80To99	R	AV	25	25	25	25	25	25	25	25	25	25	25		100
Event Window Start Time	LCB#-NNN-ATS-MMM-EvtWinStT	R	AV	25	25	25	25	25	25	25	25	25	25	25	min	Minutes since midnight
Event Window Start Date	LCB#-NNN-ATS-MMM-EvtWinStDt	R	AV	25	25	25	25	25	25	25	25	25	25	25		0--4: Day of Month 5--8: Month of Year (Jan = 1, Feb = 2,… Dec = 12) 9--15: Year + 2000 (2000--2128)
Event Window End Time	LCB#-NNN-ATS-MMM-EvtWinEndT	R	AV	25	25	25	25	25	25	25	25	25	25	25	min	Minutes since midnight
Event Window End Date	LCB#-NNN-ATS-MMM-EvtWinEndDt	R	AV	25	25	25	25	25	25	25	25	25	25	25		0--4: Day of Month 5--8: Month of Year (Jan = 1, Feb = 2,… Dec = 12) 9--15: Year + 2000 (2000--2128)

BACnet Automatic Transfer Switch Object list (Typical for each Unit)																
Object List	**Mapped Object List**	**Read/ Write**	**Object Type**	**Supply Device**	**Install Device**	**Power Device**	**Wire Device**	**Pgm Device**	**Alarmable**	**Alarm Limit**	**Alarm Type**	**Graphic**	**Trend**	**Com'd**	**Units**	**Description (acceptable value range)**
Number of Events in Window	LCB#-NNN-ATS-MMM-NumEvtWin	R	AV	25	25	25	25	25	25	25	25	25	25	25		
Windowed Events 0 -- 19	LCB#-NNN-ATS-MMM-WinEvt00To19	R	AV	25	25	25	25	25	25	25	25	25	25	25		Time, Date, Code, Param1, Param2
Calibrate L1L2 Normal Source Voltage	LCB#-NNN-ATS-MMM-ClbL1L2NrmSrc	R	AV	25	25	25	25	25	25	25	25	25	25	25	dV	Volts * 10
Password for 43400	LCB#-NNN-ATS-MMM-Pwd43400	R	AV	25	25	25	25	25	25	25	25	25	25	25		0 -- 32768
Calibrate L2L3 Normal Source Voltage	LCB#-NNN-ATS-MMM-ClbL2L3NrmSrc	R	AV	25	25	25	25	25	25	25	25	25	25	25	dV	Volts * 10
Password for 43402	LCB#-NNN-ATS-MMM-Pwd43402	R	AV	25	25	25	25	25	25	25	25	25	25	25		0 -- 32768
Calibrate L3L1 Normal Source Voltage	LCB#-NNN-ATS-MMM-ClbL3L1NrmSrc	R	AV	25	25	25	25	25	25	25	25	25	25	25	dV	Volts * 10
Password for 43404	LCB#-NNN-ATS-MMM-Pwd43404	R	AV	25	25	25	25	25	25	25	25	25	25	25		0 -- 32768
Calibrate L1L2 Emergency Source Voltage	LCB#-NNN-ATS-MMM-ClbL1L2EmeSrc	R	AV	25	25	25	25	25	25	25	25	25	25	25	dV	Volts * 10
Password for 43406	LCB#-NNN-ATS-MMM-Pwd43406	R	AV	25	25	25	25	25	25	25	25	25	25	25		0 -- 32768
Calibrate L2L3 Emergency Source Voltage	LCB#-NNN-ATS-MMM-ClbL2L3EmeSrc	R	AV	25	25	25	25	25	25	25	25	25	25	25	dV	Volts * 10
Password for 43408	LCB#-NNN-ATS-MMM-Pwd43408	R	AV	25	25	25	25	25	25	25	25	25	25	25		0 -- 32768
Calibrate L3L1 Emergency Source Voltage	LCB#-NNN-ATS-MMM-ClbL3L1EmeSrc	R	AV	25	25	25	25	25	25	25	25	25	25	25	dV	Volts * 10
Password for 43410	LCB#-NNN-ATS-MMM-Pwd43410	R	AV	25	25	25	25	25	25	25	25	25	25	25		0 -- 32768
Calibrate L1L0 Normal Source Voltage	LCB#-NNN-ATS-MMM-ClbL1L0NrmSrc	R	AV	25	25	25	25	25	25	25	25	25	25	25	dV	Volts * 10
Password for 43412	LCB#-NNN-ATS-MMM-Pwd43412	R	AV	25	25	25	25	25	25	25	25	25	25	25		0 -- 32768

BACnet Automatic Transfer Switch Object list (Typical for each Unit)																
Object List	**Mapped Object List**	**Read/ Write**	**Object Type**	**Supply Device**	**Install Device**	**Power Device**	**Wire Device**	**Pgm Device**	**Alarmable**	**Alarm Limit**	**Alarm Type**	**Graphic**	**Trend**	**Com'd**	**Units**	**Description (acceptable value range)**
Calibrate L2L0 Normal Source Voltage	LCB#-NNN-ATS-MMM-ClbL2L0NrmSrc	R	AV	25	25	25	25	25	25	25	25	25	25	25	dV	Volts * 10
Password for 43414	LCB#-NNN-ATS-MMM-Pwd43414	R	AV	25	25	25	25	25	25	25	25	25	25	25		0 -- 32768
Calibrate L3L0 Normal Source Voltage	LCB#-NNN-ATS-MMM-ClbL3L0NrmSrc	R	AV	25	25	25	25	25	25	25	25	25	25	25	dV	Volts * 10
Password for 43416	LCB#-NNN-ATS-MMM-Pwd43416	R	AV	25	25	25	25	25	25	25	25	25	25	25		0 -- 32768
Calibrate L1L0 Emergency Source Voltage	LCB#-NNN-ATS-MMM-ClbL1L0EmeSrc	R	AV	25	25	25	25	25	25	25	25	25	25	25	dV	Volts * 10
Password for 43418	LCB#-NNN-ATS-MMM-Pwd43418	R	AV	25	25	25	25	25	25	25	25	25	25	25		0 -- 32768
Calibrate L2L0 Emergency Source Voltage	LCB#-NNN-ATS-MMM-ClbL2L0EmeSrc	R	AV	25	25	25	25	25	25	25	25	25	25	25	dV	Volts * 10
Password for 43420	LCB#-NNN-ATS-MMM-Pwd43420	R	AV	25	25	25	25	25	25	25	25	25	25	25		0 -- 32768
Calibrate L3L0 Emergency Source Voltage	LCB#-NNN-ATS-MMM-ClbL3L0EmeSrc	R	AV	25	25	25	25	25	25	25	25	25	25	25	dV	Volts * 10
Password for 43422	LCB#-NNN-ATS-MMM-Pwd43422	R	AV	25	25	25	25	25	25	25	25	25	25	25		0 -- 32768
Calibrate L1 Current	LCB#-NNN-ATS-MMM-ClbL1Cur	R	AV	25	25	25	25	25	25	25	25	25	25	25	dA	Amps * 10
Password for 43424	LCB#-NNN-ATS-MMM-Pwd43424	R	AV	25	25	25	25	25	25	25	25	25	25	25		0 -- 32768
Calibrate L2 Current	LCB#-NNN-ATS-MMM-ClbL2Cur	R	AV	25	25	25	25	25	25	25	25	25	25	25	dA	Amps * 10
Password for 43426	LCB#-NNN-ATS-MMM-Pwd43426	R	AV	25	25	25	25	25	25	25	25	25	25	25		0 -- 32768
Calibrate L3 Current	LCB#-NNN-ATS-MMM-ClbL3Cur	R	AV	25	25	25	25	25	25	25	25	25	25	25	dA	Amps * 10
Password for 43428	LCB#-NNN-ATS-MMM-Pwd43428	R	AV	25	25	25	25	25	25	25	25	25	25	25		0 -- 32768
Key Press Status	LCB#-NNN-ATS-MMM-KeySta	R	AV	25	25	25	25	25	25	25	25	25	25	25		One bit per button

BACnet Automatic Transfer Switch Object list (Typical for each Unit)																
Object List	**Mapped Object List**	**Read/ Write**	**Object Type**	**Supply Device**	**Install Device**	**Power Device**	**Wire Device**	**Pgm Device**	**Alarmable**	**Alarm Limit**	**Alarm Type**	**Graphic**	**Trend**	**Com'd**	**Units**	**Description (acceptable value range)**
Device ID	LCB#-NNN-ATS-MMM-DeviceID	R	AV	25	25	25	25	25	25	25	25	25	25	25		Series 1500 ATS Controller = 0x17
Event Codes: Supplier shall map Event Codes as names.			R	AV	25	25	25	25	25	25	25	25	25	25	25	
1	End Time Delay Button	R	AV	25	25	25	25	25	25	25	25	25	25	25		
2	Test Button	R	AV	25	25	25	25	25	25	25	25	25	25	25		
3	Exercise Button	R	AV	25	25	25	25	25	25	25	25	25	25	25		
4	Lamp Test Button	R	AV	25	25	25	25	25	25	25	25	25	25	25		
5	Service Required Reset	R	AV	25	25	25	25	25	25	25	25	25	25	25		
6	Maintenance DIP Switch Changed State	R	AV	25	25	25	25	25	25	25	25	25	25	25		
7	Password DIP Switch Changed State	R	AV	25	25	25	25	25	25	25	25	25	25	25		
8	Spare DIP Switch Changed State	R	AV	25	25	25	25	25	25	25	25	25	25	25		
9	Spare DIP Switch Changed State	R	AV	25	25	25	25	25	25	25	25	25	25	25		
10	Supervised Transfer Switch Changed State	R	AV	25	25	25	25	25	25	25	25	25	25	25		
27	New I/O Module Detected	R	AV	25	25	25	25	25	25	25	25	25	25	25		
33	No Output Function Defined	R	AV	25	25	25	25	25	25	25	25	25	25	25		
34	Preferred Source Available	R	AV	25	25	25	25	25	25	25	25	25	25	25		
35	Standby Source Available	R	AV	25	25	25	25	25	25	25	25	25	25	25		
36	Contactor in Preferred Position	R	AV	25	25	25	25	25	25	25	25	25	25	25		
37	Contactor in Standby Position	R	AV	25	25	25	25	25	25	25	25	25	25	25		
38	Contactor in Off Position	R	AV	25	25	25	25	25	25	25	25	25	25	25		

BACnet Automatic Transfer Switch Object list (Typical for each Unit)																
Object List	**Mapped Object List**	**Read/ Write**	**Object Type**	**Supply Device**	**Install Device**	**Power Device**	**Wire Device**	**Pgm Device**	**Alarmable**	**Alarm Limit**	**Alarm Type**	**Graphic**	**Trend**	**Com'd**	**Units**	**Description (acceptable value range)**
39	Contactor in Source N Position	R	AV	25	25	25	25	25	25	25	25	25	25	25		
40	Contactor in Source E Position	R	AV	25	25	25	25	25	25	25	25	25	25	25		
41	Not in Auto	R	AV	25	25	25	25	25	25	25	25	25	25	25		
42	Load Control Active	R	AV	25	25	25	25	25	25	25	25	25	25	25		
43	Low Battery on Standby Source	R	AV	25	25	25	25	25	25	25	25	25	25	25		
44	Exerciser Started	R	AV	25	25	25	25	25	25	25	25	25	25	25		
45	Test Mode Active	R	AV	25	25	25	25	25	25	25	25	25	25	25		
46	Peak Shave Active	R	AV	25	25	25	25	25	25	25	25	25	25	25		
47	Non-Emergency Transfer	R	AV	25	25	25	25	25	25	25	25	25	25	25		
48	Back--up Battery Low	R	AV	25	25	25	25	25	25	25	25	25	25	25		
49	Maintenance Mode Active	R	AV	25	25	25	25	25	25	25	25	25	25	25		
50	Load Bank Activate	R	AV	25	25	25	25	25	25	25	25	25	25	25		
51	Start Source N Generator	R	AV	25	25	25	25	25	25	25	25	25	25	25		
52	Start Source E Generator	R	AV	25	25	25	25	25	25	25	25	25	25	25		
53	In Phase Monitor Waiting for Synch	R	AV	25	25	25	25	25	25	25	25	25	25	25		
54	Common Alarm	R	AV	25	25	25	25	25	25	25	25	25	25	25		
55	Source N Under Voltage	R	AV	25	25	25	25	25	25	25	25	25	25	25		
56	Source N Over Voltage	R	AV	25	25	25	25	25	25	25	25	25	25	25		
57	Source N Voltage Unbalanced	R	AV	25	25	25	25	25	25	25	25	25	25	25		
58	Source N Loss of Phase	R	AV	25	25	25	25	25	25	25	25	25	25	25		

BACnet Automatic Transfer Switch Object list (Typical for each Unit)																
Object List	**Mapped Object List**	**Read/ Write**	**Object Type**	**Supply Device**	**Install Device**	**Power Device**	**Wire Device**	**Pgm Device**	**Alarmable**	**Alarm Limit**	**Alarm Type**	**Graphic**	**Trend**	**Com'd**	**Units**	**Description (acceptable value range)**
59	Source N Phase Rotation Error	R	AV	25	25	25	25	25	25	25	25	25	25	25		
60	Source N Over Frequency	R	AV	25	25	25	25	25	25	25	25	25	25	25		
61	Source N Under Frequency	R	AV	25	25	25	25	25	25	25	25	25	25	25		
62	Source E Under Voltage	R	AV	25	25	25	25	25	25	25	25	25	25	25		
63	Source E Over Voltage	R	AV	25	25	25	25	25	25	25	25	25	25	25		
64	Source E Voltage Unbalanced	R	AV	25	25	25	25	25	25	25	25	25	25	25		
65	Source E Loss of Phase	R	AV	25	25	25	25	25	25	25	25	25	25	25		
66	Source E Phase Rotation Error	R	AV	25	25	25	25	25	25	25	25	25	25	25		
67	Source E Over Frequency	R	AV	25	25	25	25	25	25	25	25	25	25	25		
68	Source E Under Frequency	R	AV	25	25	25	25	25	25	25	25	25	25	25		
69	Failure to Acquire Standby	R	AV	25	25	25	25	25	25	25	25	25	25	25		
70	Failure to Acquire Preferred	R	AV	25	25	25	25	25	25	25	25	25	25	25		
71	Failure to Transfer	R	AV	25	25	25	25	25	25	25	25	25	25	25		
72	I/O Module Comms Lost	R	AV	25	25	25	25	25	25	25	25	25	25	25		
73	Audible Alarm Status	R	AV	25	25	25	25	25	25	25	25	25	25	25		
74	Aux. Switch Fault	R	AV	25	25	25	25	25	25	25	25	25	25	25		
75	Aux. Switch Open	R	AV	25	25	25	25	25	25	25	25	25	25	25		
76	Load Control Output #0	R	AV	25	25	25	25	25	25	25	25	25	25	25		
77	Load Control Output #1	R	AV	25	25	25	25	25	25	25	25	25	25	25		
78	Load Control Output #2	R	AV	25	25	25	25	25	25	25	25	25	25	25		

BACnet Automatic Transfer Switch Object list (Typical for each Unit)																
Object List	**Mapped Object List**	**Read/ Write**	**Object Type**	**Supply Device**	**Install Device**	**Power Device**	**Wire Device**	**Pgm Device**	**Alarmable**	**Alarm Limit**	**Alarm Type**	**Graphic**	**Trend**	**Com'd**	**Units**	**Description (acceptable value range)**
79	Load Control Output #3	R	AV	25	25	25	25	25	25	25	25	25	25	25		
80	Load Control Output #4	R	AV	25	25	25	25	25	25	25	25	25	25	25		
81	Load Control Output #5	R	AV	25	25	25	25	25	25	25	25	25	25	25		
82	Load Control Output #6	R	AV	25	25	25	25	25	25	25	25	25	25	25		
83	Load Control Output #7	R	AV	25	25	25	25	25	25	25	25	25	25	25		
84	Load Control Output #8	R	AV	25	25	25	25	25	25	25	25	25	25	25		
85	Modbus Controlled RDO #1	R	AV	25	25	25	25	25	25	25	25	25	25	25		
86	Modbus Controlled RDO #2	R	AV	25	25	25	25	25	25	25	25	25	25	25		
87	Modbus Controlled RDO #3	R	AV	25	25	25	25	25	25	25	25	25	25	25		
88	Modbus Controlled RDO #4	R	AV	25	25	25	25	25	25	25	25	25	25	25		
89	3 Source System Disable Output	R	AV	25	25	25	25	25	25	25	25	25	25	25		
90	Common Alarm 2	R	AV	25	25	25	25	25	25	25	25	25	25	25		
91	Audible Alarm Has Been Silenced	R	AV	25	25	25	25	25	25	25	25	25	25	25		
99	No Input Function Defined	R	AV	25	25	25	25	25	25	25	25	25	25	25		
100	Forced Transfer to Off	R	AV	25	25	25	25	25	25	25	25	25	25	25		
101	Peak Shave Mode	R	AV	25	25	25	25	25	25	25	25	25	25	25		
102	Inhibit Transfer	R	AV	25	25	25	25	25	25	25	25	25	25	25		
103	Remote End Time Delay	R	AV	25	25	25	25	25	25	25	25	25	25	25		
104	Remote Test	R	AV	25	25	25	25	25	25	25	25	25	25	25		
105	Low Battery Voltage	R	AV	25	25	25	25	25	25	25	25	25	25	25		

BACnet Automatic Transfer Switch Object list (Typical for each Unit)																
Object List	**Mapped Object List**	**Read/ Write**	**Object Type**	**Supply Device**	**Install Device**	**Power Device**	**Wire Device**	**Pgm Device**	**Alarmable**	**Alarm Limit**	**Alarm Type**	**Graphic**	**Trend**	**Com'd**	**Units**	**Description (acceptable value range)**
106	Remote Common Alarm	R	AV	25	25	25	25	25	25	25	25	25	25	25		
107	Bypass Contactor Disable	R	AV	25	25	25	25	25	25	25	25	25	25	25		
108	3 Source System Disable Input	R	AV	25	25	25	25	25	25	25	25	25	25	25		
109	Remote Monitor Input #1	R	AV	25	25	25	25	25	25	25	25	25	25	25		
110	Remote Monitor Input #2	R	AV	25	25	25	25	25	25	25	25	25	25	25		
111	Remote Monitor Input #3	R	AV	25	25	25	25	25	25	25	25	25	25	25		
112	Remote Monitor Input #4	R	AV	25	25	25	25	25	25	25	25	25	25	25		
120	System Ready	R	AV	25	25	25	25	25	25	25	25	25	25	25		
121	Critical Service Required	R	AV	25	25	25	25	25	25	25	25	25	25	25		
122	Non---- Critical Service Required	R	AV	25	25	25	25	25	25	25	25	25	25	25		
123	System Parameter Changed	R	AV	25	25	25	25	25	25	25	25	25	25	25		
124	Source N Available	R	AV	25	25	25	25	25	25	25	25	25	25	25		
125	Source E Available	R	AV	25	25	25	25	25	25	25	25	25	25	25		
126	Over Frequency	R	AV	25	25	25	25	25	25	25	25	25	25	25		
127	Under Frequency	R	AV	25	25	25	25	25	25	25	25	25	25	25		
128	Loss of Phase	R	AV	25	25	25	25	25	25	25	25	25	25	25		
129	Phase Rotation Error	R	AV	25	25	25	25	25	25	25	25	25	25	25		
130	Over Voltage L1----L2	R	AV	25	25	25	25	25	25	25	25	25	25	25		
131	Over Voltage L2----L3	R	AV	25	25	25	25	25	25	25	25	25	25	25		
132	Over Voltage L3----L1	R	AV	25	25	25	25	25	25	25	25	25	25	25		

BACnet Automatic Transfer Switch Object list (Typical for each Unit)																
Object List	**Mapped Object List**	**Read/ Write**	**Object Type**	**Supply Device**	**Install Device**	**Power Device**	**Wire Device**	**Pgm Device**	**Alarmable**	**Alarm Limit**	**Alarm Type**	**Graphic**	**Trend**	**Com'd**	**Units**	**Description (acceptable value range)**
133	Under Voltage L1----L2	R	AV	25	25	25	25	25	25	25	25	25	25	25		
134	Under Voltage L2----L3	R	AV	25	25	25	25	25	25	25	25	25	25	25		
135	Under Voltage L3----L1	R	AV	25	25	25	25	25	25	25	25	25	25	25		
136	Voltage Unbalanced	R	AV	25	25	25	25	25	25	25	25	25	25	25		
137	History Log Saved	R	AV	25	25	25	25	25	25	25	25	25	25	25		
148	Inphase Synching	R	AV	25	25	25	25	25	25	25	25	25	25	25		
175	Auto Loaded Test Complete	R	AV	25	25	25	25	25	25	25	25	25	25	25		
201	Transfer Mode Changed	R	AV	25	25	25	25	25	25	25	25	25	25	25		
202	Default History Loaded	R	AV	25	25	25	25	25	25	25	25	25	25	25		
203	Reserved for future use	R	AV	25	25	25	25	25	25	25	25	25	25	25		
204	Default Settings Loaded	R	AV	25	25	25	25	25	25	25	25	25	25	25		
205	MLB Programmable Input Changed	R	AV	25	25	25	25	25	25	25	25	25	25	25		
206	MLB Programmable Output Changed	R	AV	25	25	25	25	25	25	25	25	25	25	25		
207	Exercise Loaded Changed	R	AV	25	25	25	25	25	25	25	25	25	25	25		
208	Test Loaded Changed	R	AV	25	25	25	25	25	25	25	25	25	25	25		
209	One/Two Week Exercise Changed	R	AV	25	25	25	25	25	25	25	25	25	25	25		
210	Disable Exercise Changed	R	AV	25	25	25	25	25	25	25	25	25	25	25		
211	Preferred Source Changed	R	AV	25	25	25	25	25	25	25	25	25	25	25		
212	Default Settings Loaded	R	AV	25	25	25	25	25	25	25	25	25	25	25		

BACnet Automatic Transfer Switch Object list (Typical for each Unit)																
Object List	**Mapped Object List**	**Read/ Write**	**Object Type**	**Supply Device**	**Install Device**	**Power Device**	**Wire Device**	**Pgm Device**	**Alarmable**	**Alarm Limit**	**Alarm Type**	**Graphic**	**Trend**	**Com'd**	**Units**	**Description (acceptable value range)**
215	Backup Parameter File Loaded	R	AV	25	25	25	25	25	25	25	25	25	25	25		
216	Backup History File Loaded	R	AV	25	25	25	25	25	25	25	25	25	25	25		
223	Modbus Force Transfer to Off	R	AV	25	25	25	25	25	25	25	25	25	25	25		
224	Modbus Peak Shave	R	AV	25	25	25	25	25	25	25	25	25	25	25		
225	Modbus System Test	R	AV	25	25	25	25	25	25	25	25	25	25	25		
248	Battery Backup Output Changed	R	AV	25	25	25	25	25	25	25	25	25	25	25		
251	A USB Device Has Been Connected	R	AV	25	25	25	25	25	25	25	25	25	25	25		
252	A USB Device Has Been Disconnected	R	AV	25	25	25	25	25	25	25	25	25	25	25		
256	System Ready	R	AV	25	25	25	25	25	25	25	25	25	25	25		

3 - EXECUTION

3.01 BACnet Interface Device to the Equipment Supplier's Modbus DeviceInstallation and Commissioning: BACnet/IP requirements

3.01.1 The following BACnet Interface Devices to the Equipment Suppliers' Modbus Devices described in this Section shall reside on the Owner's network as a BACnet/IP device.

3.01.1.1 Packaged Generator Assembly.

3.01.2 A BACnet/IP device provided in the Work shall meet the following requirements:

3.01.2.1 BACnet/IP device shall include an Annex J B/IP router to support BACnet/IP to act as a client and/or server for all BACnet information from the supplied equipment to the BAS Device Network, which is considered a "directly connected network".

3.01.2.2 The BAS Device Network is treated as a "remote network" that is reachable by communicating using BACnet/IP with a router supplied by others that serves the remote network.

3.01.2.3 The BACnet/IP device shall come c/w a BBMD that will be configured to traverse IP subnets.

3.01.2.4 The interface shall have an open Ethernet RJ-45 port for connection to the BAS system device network infrastructure using communications cabling that complies with the TIA/EIA 568-B standard.

3.01.2.5 The interface shall operate at a minimum of 10 Mbps, full duplex.

3.01.3 The Owner will arrange for the following:

3.01.3.1 The IT department will provide a static IP address for the BACnet/IP BACnet Interface Device.

3.01.3.2 The IT department will assist with the commissioning of the network connection with this Contractor and the Modbus Device supplier. The Owner and designated personnel are only responsible for providing the termination to the building switch in the Comms room and for ensuring that the IP connection to the Intranet is operational.

3.01.3.3 The Owner will provide the passwords and access levels required for the Work.

3.01.4 Controls Contractor is the supplier of the BACnet Interface Device to the Equipment Supplier's Modbus Deviceand this Contractor shall provide the following:

3.01.4.1 Configuration of the device with the assigned IP address.

3.01.4.2 Connection of the network cable to the BACnet Interface Device.

3.01.4.3 Commissioning the final network connection to the Owner's network.

3.01.4.4 Providing details of the required alarms, schedules and trends as outlined in the Sequence of Operation.

3.01.4.5 Review of the graphics created by this Contractor.

3.01.4.6 Creation and assignment of passwords and access levels within the device.

3.01.4.7 Joint commissioning of the BACnet Interface Device to the Equipment Supplier's Modbus Devicewith this Contractor to the satisfaction of the Owner or the designated Commissioning Authority. The Work includes the following:

3.01.4.7.1 Use the commissioning forms and procedures outlined in this Division.

3.01.4.7.2 All network visible objects shall be commissioned.

3.01.4.7.3 The process shall be overseen by Controls Engineer.

3.01.4.7.4 Allow 8 hours of on-site time for this Work.

3.01.4.7.5 The following special provisions apply to the commissioning Work.

3.01.4.7.5.1 NONE.

3.01.5 This Contractor shall provide the following:

3.01.5.1 A schedule as to when the networking requirements need to be completed. See the Division 25 section for this information to be provided as a Shop Drawing.

3.01.5.2 Joint commissioning the final network connection to the Owner's Intranet.

3.01.5.3 Creating of the required alarms, schedules and trends as outlined in the Sequence of Operation. The following minimums apply to this Section:

3.01.5.3.1 A minimum of 10 alarms or an alarm for each equipment fault. Two of which are considered critical.

3.01.5.3.2 A minimum of 1 schedule.

3.01.5.3.3 A minimum of 10 Extended Trends.

3.01.5.4 Assistance to ALC Chicago for the creation of the Front End graphics based on information from the supplier of the BACnet Interface Device. The following minimums apply to this Section:

3.01.5.4.1 The equipment supplier shall provide material so ALC Chicago can create a graphic that matches the device. Emulate the functionality of the supplied equipment local interface (e.g., annunciator panel, LCD display, GUI interface) at the BAS system Front End.

3.01.5.4.2 Provide one master alarm graphic showing the Critical Alarms and all equipment fault alarms.

3.01.5.4.3 Where a table of Object Types is not provided in this section, allow for a minimum of 500 objects to be mapped from the BACnet Interface Device.

3.01.5.5 Documentation of passwords and access levels within the device using information provided by the Owner.

3.01.5.6 Commission the BACnet Interface Device to the Equipment Supplier's Modbus Devicewith the equipment supplier, to the satisfaction of the Owner or the designated Commissioning Authority. The Work includes the following:

3.01.5.6.1 Use the commissioning forms and procedures outlined in this Division.

3.01.5.6.2 The process shall be overseen by Controls Engineer.

3.01.5.6.3 Provide confirmation via the Shop Drawing process before the Work starts. Any variations shall be approved via the Shop Drawing process.

3.01.5.6.4 Complete commissioning of all network visible object types according to the procedures outlined in Section 25 08 00, using the relevant Commissioning Forms for each BACnet Object Types.

3.01.5.6.5 Verify all network visible BACnet Object Types correctly display the same information on the Front End as is being displayed on the equipment local interface. All network visible objects shall be commissioned.

3.01.5.6.6 Parse all equipment packaged controls alarms, trends and schedules that are represented as AV and BV BACnet Object Types by the equipment packaged controls interface.

3.01.5.6.7 Allow 8 hours of on-site time for this Work.

3.01.5.6.8 The following special provisions apply to the commissioning Work.

3.01.5.6.8.1 NONE

End of Section

25 25 26.24.02 INTEGRATED AUTOMATION – WIRED CONNECTION – SPD (TVSS) (ALL TYPES)

1 - GENERAL

1.01 Controls Coordination Meeting

1.01.1 This Contractor shall meet with all other Contractors (and/or Manufacturer's representative) who are supplying equipment with a hardwired interface device that is being connected to the Intranet at the Place of the Work to co-ordinate details of the interface connection between their product(s) and the Intranet.
1.01.2 The Owner or his designated representative shall be present at this meeting.
1.01.3 Submittals for these products shall not be approved prior to the completion of this meeting.

2 - PRODUCTS

2.01 General

2.01.1 This Contractor shall connect to the following aux contacts and shall create a graphic of this connection in the Front End. <u>There is no BACnet interface for this device.</u>
2.01.2 See Electrical Drawings for locations and quantities.

BACnet Aux Contact list (Typical for each Unit)																
Aux Contact List	**Mapped Object List**	**Read/ Write**	**Object Type**	**Supply Aux Contact**	**Install Aux Contact**	**Power Aux Contact**	**Wire Aux Contact**	**Program[1] Aux Contact**	**Alarmable**	**Alarm Limit**	**Alarm Type**	**Graphic**	**Trend**	**Com'd**	**Units**	**Description (acceptable value range)**
SPD (TVSS)																
SPD (TVSS) Alarm	LCB#-NNN-SPD-MMM-Alm	R	BI	ES	ES	26	25	ES	Y	TBD	TBD	25	25			Dry Contact See Contract Documents for quantities and locations

Notes:
1. In this column, 'Program' refers to the Equipment Supplier's responsibility to enable the aux contact, or to set high/low limits for turning the aux contact on or off.

3 - EXECUTION

3.01 Device Installation and Commissioning:

3.01.1 This Contractor and the Supplier shall jointly test and commission the aux contacts.

3.01.1.1 If the SPD point is wired to the meter then it is a software object then it will be mapped as part of the Electric Meter BACnet Interface Device.

3.01.2 Electrical Contractor shall provide the following:

3.01.2.1 Provide power to the aux contact panel if separate power is required by the supplier.
3.01.2.2 Provide a separate conduit from the pad mount transformer to the Electrical Room in the trench constructed for the main feeder to the building. Provide a pull wire in the conduit so Division 25 can install the connections to the temperature and pressure aux contacts on the transformer.

End of section