Purchasing Division
18 North County Street – 9th Floor
Waukegan, Illinois 60085-4355
Phone 847 377-2929
Fax 847 984-5889

September 26, 2013

ADDENDUM #2
REQUEST FOR PROPOSAL #13231
COUNTYWIDE RADIO COMMUNICATIONS SYSTEM
RFP Opening Date: OCTOBER 31, 2013, 2:00 p.m. local time

Please note the following clarifications, revisions, and/or additions to the RFP documents.

Please note the RFP opening date has been changed to <u>October 31, 2013, 2:00 p.m. local time</u>. Proposals will be accepted at the Lake County Central Permit Facility, 500 W. Winchester Road, Libertyville, IL 60048. The last date to submit questions will be October 3, 2013.

1. **Question:** Regarding Section 3.2, last paragraph of Exhibit A, the RFP states that Offeror must clearly and specifically define its state of development, migration path, and any costs associated with migration from its proposed County solution to the Offeror's solution which is compliant with P25 Phase 2.

   Please clarify if a hardware and software update is permissible when upgrading in the future to P25 Phase 2 or is it Lake County's expectation and technical requirement that "Phase 2 capable hardware" is implemented during the initial deployment thereby necessitating software modifications only when upgrading to P25 Phase 2.

   Does the RFP allow vendors to utilize base stations which are P25 Phase 1 capable only and which require both a hardware upgrade and a software upgrade to achieve P25 Phase 2 functionality?
   Response: The County will evaluate all approaches as presented by the Offerors.

2. **Question:** Exhibit A, Section 11.6 / pg 242 Exhibit A states that "At a minimum, the proposed system or any subsystem experiences a significant failure that results in:
   - Failure or loss of any 25 features, functions or capabilities

   Should "any 25 features" be "any P25 features"?
   Response: Yes, that is a typo error. It should read "any P25 features, …"

3. **Question:** Exhibit A, Section 14.3 / pg 255 Last sentence states "The parts pricing level shall remain intact for a period not less than fifteen years following final system acceptance."
   Does this mean that the pricing supplied for spare parts is locked to the same sale price for 15 years?
   Response: It refers to the discount level and other such agreements.

4. **Question:** 10.8 UNINTERRUPTIBLE POWER SUPPLY (UPS) SPECIFICATIONS Will Lake County consider allowing alternative UPS designs with dual conversion that incorporate the latest technology in UPS design and offer similar operational value?
   Response: Yes.

5. **Question:** Section 10.8 UNINTERRUPTIBLE POWER SUPPLY (UPS) SPECIFICATIONS; Will Lake County consider a more industry typical UPS solution of two hour or less run time to reduce cost and limit excessive shelter floor loading?

Response: The County will accept alternate proposals if the respondent desires, provided that the respondent also submits a compliant proposal.

6. **Question:** Exhibit A, Section 11.5 / pg 233 Is the bounded coverage area the legal jurisdiction of Lake County?
   Response: Yes. Note for the Portable On-Street Coverage the RFP asks for 3-miles beyond boundary as allowed by FCC and Region 54. In that case the bounded coverage is extended beyond the legal jurisdiction of Lake County.

7. **Question:** Please confirm that the coverage testing is to be done with a ¼ wave antenna, not a ½ wave antenna.
   Response: Confirmed.

8. **Question:** Section # 8.1.4.1 - What type of vehicle(s) and how many vehicles require positive ground?
   Response: The County is not aware of any vehicles that require a positive ground.

9. **Question:** Please confirm that every accessible grid in the County needs to be tested for coverage, not just the ones shown as covered.
   Response: Confirmed.

10. **Question:** Exhibit A, Section 3.1, pg 53 Exhibit A requires that the portable radio be positioned on the hip with a standard lapel speaker microphone and a ¼-wave antenna. We recommend that the County use a ½-wave antenna on the portable to minimize the number of RF sites required to provide the specified coverage within the County. Is the ½-wave antenna acceptable to the County?
    Response: The County will accept alternate proposals if the respondent desires, provided that the respondent also submits a compliant proposal.

11. **Question:** Exhibit A, Section 5.1.1 / Appendix D, pg 81 & 82 / 281 How many of County subscribers (radio users) have both a mobile and portable radio?
    Response: Approximately 265.

12. **Question:** Section # 5.2.5 - Please define the term “craft interface.”
    Response: This terminology originally derived from "craftspersons" (or telephone network engineers) allows access through and send a command. The access and sending of the commands can be through a dumb terminal or other emulation programs using a laptop, pc or through a server.

13. **Question:** Section # 3.5.39 - What type of PBX does the County use?
    Response: MITEL MCD 3300.

14. **Question**: In Section 2.3.1, “Summary of Major Concerns and Challenges,”, RFP refers to “Channel Congestion (Not a Radio Issue)”. What is meant by that?
    Response: This issue was reported during the Needs Assessment study. This is not a radio issue as the radio system can accommodate multiple dispatch configurations. The system is lightly loaded from the radio traffic point of view. The reported congestion is for the main Sheriff Dispatch channel which all sheriff units are on for the entire county. The County can be split into two or more main dispatch channels; however, it will likely have staffing implications and other operational issues that must be considered before implementing the appropriate solution. Other options for the County to consider is use of the Computer Aided Dispatch (CAD) system to reduce the voice traffic on the voice system. Note this item is not part of this RFP.

15. **Question:** Will the 11 buildings listed on page 276 be included in the September 16 and 17 site visits.? And if not, will/can these sites be covered at another time prior to the due date for the Proposals to be submitted?
    Response: Yes.

16. **Question**: Will there be some type of weighting on evaluation scoring of the technical items such as coverage, functionality, etc.? Are there any economic trade-offs?
    Response: Scoring or review information systems used by the evaluation committee will not be made available to the public. A technical evaluation committee will be responsible for evaluating the proposals and submitting their findings for the County's determination. The Offerors can submit alternates (in addition to the main proposal) to allow economic offsets.

17. **Question**: Please review the GOS assumptions stated in Section 5.1.1 on page 81 of 283. The number of channels we came up with is higher than the 8 channels.
    Response: The current system is lightly used. During the Month of August 2013, there were total of 280,699 calls with an average call duration of 3.06 seconds. The highest number of calls during an hour were 1,055 with 123 active units. The RFP however, anticipates additional users joining the system once upgraded to a P25 system. The GOS assumptions are used to simulate a possible future traffic analysis scenario.

    Section 5.1.1, page 81 of 283 is revised as follows:
    - ~~75% of the requested~~ **1,107** subscribers will be active at the busiest time
    - Average call duration is approximately ~~6~~ **3.06** seconds
    - Number of calls per subscriber per hour is approximately 2
    - Number of system talkgroups is approximately 180
    - Message trunking repeater hangtime, if used, is approximately 1 second
    - Maximum acceptable average wait time is 0.5 seconds
    - Compute network GOS % values for the system design utilizing 7 trunked channels/talkpaths.

18. **Question**: Is the Coverage requirement for a bounded area or are they for the vendor's predicted area.
    Response: The RFP requires bounded coverage guarantee as specified in Section 3.1 for Elements 1 through 4.

19. **Question**: Page 54 of 283, Element 4, appears to contain areas of foliage. Are they meant to be included in the 16 dB building areas?
    Response: The areas included in Appendix B planning map are designated for future build up.

20. **Question**: Section 11.5; what is the Minimum signal level for passing the CATP?
    Response: The Minimum Received Signal Level (MRSL) is to be provided by the Offeror and is dependent on the Offeror's system and subscriber equipment. The calculations used to arrive at the MRSL shall follow the procedures established in TIA. The MRSL values proposed by vendors is subject to approval by the County.

21. **Question:** Section 8.1.2, Page 166, please specify a MIL Spec for the EMP requirement.
    Response: The 1st paragraph on page 166 is revised as follows:
    To the greatest extent possible, all equipment assemblies and sub-assemblies shall be shielded to minimize electromagnetic interference which may be caused to/by electrical equipment co-located and/or adjacent to this equipment. ~~Similarly the radios should be capable of shielding from electromagnetic pulse radiation (EMP) resulting from the detonation of a nuclear device or other pulse generating device.~~

22. **Question:** On Page 53 and page 54 Confirm that the 95% service area reliability is for 95% area reliability at 95% confidence.
    Response: Yes the coverage requirement is for 95% area reliability at 95% confidence.

23. **Question:** Clarify the "table" mentioned on page 18 of the main RFP document and shown below:
    Response: Page 18 of the main RFP document, the paragraph is revised as follows:
    Production COTS – The proposed capability is provided by a fully-functional commercial-off-the-shelf production product or component. ~~The table must indicate~~ **Indicate** the Offeror's reference (one or more of the corporate references provided in response to the Qualifications section of the RFP) at which the capability is in use.

24. **Question:** Do prevailing wage labor rates apply to site construction or other scopes of work on the Countywide Radio Communications System Project?"
    Response: Yes. Prevailing wage labor rates apply to all fixed works constructed by any public body or paid in whole or in part with public funds, including all projects funded or financed in whole or in part with bonds, grants, loans or other funds made available by or through the State or any of its political subdivisions, or undertaken by an institution supported in whole or in part by public funds. Landscape or modifications to real estate are included within the definition of fixed work. A project does not have to be for public use to be covered.

25. **Question:** Will Lake County provide a copy of the attendees list from the Pre-proposal conference?
    Response: A copy of the list of attendees is included as part of this addendum.

26. **Question:** Page 10 of the main RFP document under Proposals Desired reads: "'The County desires and requires, a complete turnkey solution addressing all project systems, subsystems, and components." However, on page 11, the fourth option under Proposal Options allows: "Integration of the County's Current Radio System to an existing 700/800 MHzP25 Phase 1 and Phase 2 Trunked System" as a viable option.
    Response: Specific functional, interoperable and performance requirements are specific in the Technical Specifications document and apply to all options listed on Page 11 under "Proposals Desired". There is no advantage or bias associated with or derived from any of the options.

27. **Question:** Page 10 of the main RFP document under Scope of Work reads: "The Offeror to whom a contract is awarded under this solicitation shall assume complete responsibility for engineering, furnishing, licensing, installing, optimizing, testing and warranting the 800 MHz (700 MHz capable) bounty Radio Communications System hereinafter referred to as the ..system,'.
    Response: The reference to "700 MHz Capable" in the RFP simply means that the system design and architecture as proposed shall be capable of accommodating 700 MHz channels. It is understood that additional equipment such as 700 MHz RF equipment (Combiners, antennas, etc.) may need to be added in the event 700 MHz channels were added to the system. If the respondent's proposal meets the capacity requirements of the County with the existing 800 MHz channels identified, no specific 700 MHz equipment needs to be proposed. However, the County does require that the respondent specify what steps would need to be taken to accommodate 700 MHz channels in the event this was required in the future.

28. **Question:** Page 21 of the main RFP document under Proposal Evaluation and Selection Process: this general statement regarding the evaluation criteria and process. The evaluation process is tiered in that a vendor is evaluated at each phase, and such vendor may not proceed to the next phase without a successful completion of the prior phase. For example, Phase 2 - Technical Proposals are evaluated before Phase 3 - Cost Proposals. If a vendor does not get past Phase 2 - Technical Proposals with the narrow requirements in same, the County will not get the benefit of a complete evaluation of cost benefit when evaluating technical proposals as compared to price, for example. A technically adequate solution may be

discarded at Phase 2 because of inflexible technical requirements without the option to evaluate it against the cost. This binary evaluation process does not lend itself to a balanced procurement for the County. We propose that the County incorporate a scoring sheet into the RFP that spans across the phases so that all requirements may be evaluated together. For example, Phase 1, 2 and 3 should all be evaluated by the County's evaluation team at the same time so that the totality of the proposal and the circumstances surrounding the proposal are evaluated as a whole.
Response: The County intends to maintain the evaluation process described on page 21 of the Request for Proposals.

29. **Question:** Page 22 under Proposal Evaluation Phase 3 - Cost Proposals: The County makes no mention of total cost of ownership criteria in its price evaluation. We believes it is in the best interests of the County to include a total cost of ownership component for at least a period of 5 years and realistically up to 10 years in its evaluation criteria. There are extraordinary maintenance, upgrade and license fees present in other vendors' solutions that may surprise the County as to the total costs of owning the proposed system over a period of time. It would be beneficial if the County asks for, and establishes clear evaluation criteria, based on this information during the procurement phase for full transparency as to the anticipated costs of ownership.
Response: The County intends to take into account total cost of ownership as it evaluates the cost proposals.

30. **Question:** Page 82, Section 5.1.3 of Exhibit A of the RFP, reads: "The 800 MHz (700 MHz capable) trunked repeaters should be managed by the Master Network andlor Primary Site Trunking Controller(s) that manages and selects available communications channels. When a request for communications from a subscriber unit or dispatch console occurs, the controller shall acknowledge the request and assign an idle channel for communications, based on user privileges and call access control parameters."
Response: Change Section 5.1.3 to read as follows:
The 800 MHz (700 MHz capable) trunked repeaters should be managed by ~~the Master Network and/or Primary Site Trunking Controller(s)~~or contain trunking control functionality that manages and selects available communications channels. When a request for communications from a subscriber unit or dispatch console occurs, ~~the controller shall acknowledge the request and assign~~ an idle channel shall be assigned for communications, based on user privileges and call access control parameters. The proper talkgroup or individual call also shall be assigned to the available trunked channel by the ~~appropriate call processing controller~~trunking control function which communicates through a dedicated or working control channel. The trunking communications protocols simply organize all subscriber units belonging to a specific configurable talkgroup address to electronically merge to an electronically assigned available talkgroup RF resource under the domain of the ~~trunked system controller network~~ trunking control function for the duration of the voice transmission. Once talkgroup communications has ended, network logic causes subscriber units to return to the system control channel awaiting further communications instructions.

31. **Question:** Page 86, Section 5.1.4.L of Exhibit A of the RFP, requires a specific requirement for a control site. Our solution, simulcast control is implemented via software installed onto the repeater providing distributed simulcast control functionality.
Response: The simulcast design ~~shall have the capability to connect audio and data between the prime control site and remote transceiver sites via multiple DS-1 (T-1) microwave circuits. The system~~ shall be capable of automatically adjusting the path delay and amplitude of any one or all DS-1 circuits utilized in the system. The automatic adjustment shall compensate for any change in microwave paths. The system shall be capable of maintaining a phase delay (launch time) of no more than +/- 3 microseconds and an amplitude of 0.1 dB between transmit sites. The path delays shall be dynamically adjustable to

compensate for at least 60 milliseconds of inherent path delay. A simulcast design also shall be compatible with the use of leased Fiber Optic services (if necessary).

A written response to the following items shall be included in the Offeror's response:

- Renetting Interval - The recommended interval at which the system is to be "renetted" or verified with respect to adjustment of frequency, modulating signal amplitude and phase, shall be specified.
- Simulcast Time Delay Control - Once the path delays have been measured, the method by which audio path time delay will be automatically controlled and equalized shall be specified. The maximum amount of path delay compensation shall be specified.
- Frequency Stability - The method by which the frequency of base station transmitters is maintained within the required tolerance for satisfactory simulcast operation shall be specified, and this value shall be provided. Options for enhanced frequency stability, if any, shall be identified and the cost(s) listed in the Pricing section.
- Addition of Sites - The procedure and equipment required for the addition of base repeater or receiver sites shall be specified. Also, the maximum site capacity of the system in a~~'s~~ simulcast configuration~~controller(s)~~ shall be specified.
- Addition of Channels - The procedure and equipment required for the addition of base repeater or receiver channels shall be specified.
- ~~Also, the maximum channel capacity of a single simulcast "Site" or "Prime" controller~~ (if used) shall be specified. Control of Sites - The Offeror shall describe the method by which the simulcast remote sites are controlled and interfaced with the ~~trunked system controller~~remainder of the trunking infrastructure. Link type and bit rate shall be specified.
- System Architecture - The trunked simulcast system architecture shall be described in detail, with written descriptions of all major system components and their functions. System and site block diagrams shall be provided to show the interconnection and the detailed audio/logic signal flow (e.g.; tx audio +/-, keying +/- etc.) between system elements (components/equipment racks).

32. **Question:** Page 87, Section 5.I.4.2 of Exhibit A of the RFP, includes a specific requirement for the voter comparator to be a separate system.
Response: Change Section 5.1.4.2 to read as follows:
~~A~~ R~~r~~eceiver voting/comparator ~~system shall be furnished and installed which~~capability shall be included which will ~~shall~~ allow the automatic selection of the receiver providing the lowest Bit Error Rate (BER) and Forward Error Correction coding (FEC). The voting/comparator functionality shall pass the selected audio to the dispatch consoles and the simulcast audio distribution network for rebroadcast to other mobile, control station or portable field units. The receivers operating in the voting system shall, at minimum, be those included in the base station transceivers.
The trunked system shall provide console priority. The operation of the voting/comparator functionality ~~comparator/selector~~ shall not be evident; there shall be no clipped syllables and no noticeable delay in the selection process.
The voting/comparator functionality~~comparator~~ shall be radio frequency band independent. The voting/comparator functionality ~~digital comparator~~ shall incorporate frame diversity that ~~allows the comparator to utilize the best~~utilizes data frames of all the inputs to construct a better output signal than any one single input signal ~~of the comparator~~. Each receiver shall generate "idle data" when it is in the idle (squelched) state. The idle data shall be transportable by a DS-1 (T-1) audio circuit.
The voting/comparator functionality~~comparator~~ shall provide an indication of a failed digital microwave audio circuit or input serving a receiver through loss of detection of idle data, or by other supervisory method. The voting/comparator functionality ~~receiver voting comparator~~ shall be equipped to provide a real-time voting activity display and output. Voting activity displays shall include receiver selected, receiver unsquelched, receiver failed and receiver disabled.
The voting/comparator functionality ~~digital comparator~~ shall provide alarms for key operational parameters, and shall provide for remote inquiry display, disablement and diagnostic functions via RS232

and Ethernet connections. Alarms shall be displayed at all NMS workstations and through craft interfaces. The voting/comparator functionality ~~digital comparator~~ shall provide high-level diagnostic information ~~through front-panel LEDs~~ and relevant indicators so that a technician or network administrator can quickly gauge the severity of a ~~digital comparator~~voting fault ~~by looking at the digital comparator~~via a visual indicator. The voting/comparator functionality ~~digital comparator~~ shall provide both alarm messages and fault conditions using Simple Network Management Protocol (SNMP)~~ and discrete Form-C relays~~. At a minimum, the voting/comparator functionality ~~digital comparator~~ shall provide Critical, Major, and Minor ~~relays~~ faults which shall indicate specific site locations and which may be ~~connected~~ reported to a separate alarm subsystem. All voting/comparator functionality ~~digital comparator~~ alarm information shall be time/date stamped in synchronization with the master network clock. ~~All comparator ports shall be uniquely labeled and identified on the comparator chassis so as to highlight the specific receiver sites.~~

33. **Question:** Page 91 , Section 5.1.11 of Exhibit A, includes the following requirement: "The proposed network shall provide network controller functionality that tracks the real-time subscriber unit locations and affiliations through the use of Home and Visitor Location Register databases".
Response: Change Section 5.1.11 to read as follows:
The proposed network shall provide ~~network controller~~ functionality that tracks the real-time subscriber unit locations and affiliations through the use of Home and Visitor Location Register databases.

34. **Question:** Page 94, Section 5.2 of Exhibit A (and all subsequent subsections of Section 5.2), require a master network controller subsystem.
Response: Change Section 5.2 to read as follows:
MASTER NETWORK ~~CONTROLLER SUBSYSTEM INFRASTRUCTURE~~NETWORK CONTROL FUNCTION (NCF)
General Requirements
The ~~Master Network Controller (MNC)~~Network Control Function (NCF)~~ subsystem~~ comprises all system-level and~~,~~ subsystem-level functionality~~, and associated site controller(s)~~ required to deliver mission-critical digital trunking call processing and features in real-time. The design shall provide for high availability under the most extreme operating conditions and redundant network controllers or fallback designs are required when feasible. General tasks to be performed by the ~~MNC~~ NCF~~and/or associated site controllers~~ include: receipt and decoding of digital data from mobile/portable/control station radios, selection and efficient assignment of available radio channels, transmission and encoding of digital data sent to mobile/portable/control station radios, control of base repeaters, transmission of station identification required by the FCC, authenticating and controlling radio system access, maintaining affiliation and subscriber location databases, mobility management, control of switching subsystem infrastructure, and monitoring of alarm functions.

Availability/Reliability Requirements
The County requires a digital trunked system that will not suffer the loss of trunking capability as a result of the failure of a single system component or portion of the NCF~~, in particular the MNC subsystem~~. Should any component of the ~~MNC~~ NCF subsystem fail, sufficient redundancy shall be incorporated in the system design so that full trunking operation continues without interrupting existing communications. Trunking capability is defined in this context as the ability of the proposed system to assign voice channels to independent talkgroups, as required, and the ability of the system user groups to remain functionally independent (i.e., full APCO 25 trunked feature set with no loss of features). A single ~~controller~~ failure that reverts the proposed system to a non-APCO 25 trunked feature set operation is not acceptable.

In the case ~~of~~ where redundant ~~MNC subsystem controllers~~equipment is used, ~~both controllers~~the primary and backup equipment shall remain online continuously with parallel updating and mirroring of all system database(s) to ensure no interruption or degradation of trunking service in the event of failure of an active or standby ~~MNC controller(s)~~NCF component. Switching from ~~active to standby controller operation~~primary to backup equipment shall be fully automatic, with audible and visual indication of the

switchover provided to all network fault management workstations and supervisory dispatch console terminals. Manual switching functionality ~~between the active/standby MNC controller(s)~~ also shall be provided from the network management terminals. The Offeror shall identify the amount of time to switch between the primary and backup equipment component~~the active and standby MNC controllers~~. The Offeror shall provide ~~both MNC controller~~ SNMP alarm diagnostic information ~~and discrete MNC alarm relays~~ to the network management and diagnostic terminals to accurately identify the health of the NCF.

The County requires the proposed system and the ~~MNC controller(s) to~~NCF be designed to provide 99.9999% or greater availability. Any system component enclosure or power distribution design that could render the system or 20% of its trunked channel resources useless or unavailable for communication from a single point of failure, shall incorporate redundancy to eliminate this vulnerability. This vulnerability elimination may be in the form of a redundant component/enclosure or a distributed redundant design that distributes single points of failure among multiple card cages, cabinets or housings each operating on its own dedicated power circuit.

Switching between ~~MNC controllers~~NCF components (manually or automatically) shall not cause radio subscriber units to attempt to roam away or de-affiliate from the site or subsystem at which they are currently affiliated. Subscriber units shall not have to re-affiliate with a site or subsystem after any type of ~~MNC controller~~NCF switch has occurred.

If an Offeror's design requires an additional site or subsystem controller to serve and report to the ~~MNC~~NCF, then the ~~MNC~~ NCF shall have complete control of wide-area call processing and channel assignments until its failure or failure of another critical network component. At that failure time, the site or subsystem controller should assume trunking control, utilizing the same systemwide subscriber radio user database and functionality without user intervention or interruption to trunking communications.

- The Offeror shall fully define any hierarchical network controller relationship that exists to facilitate normal and fallback communications on the proposed system. The Offeror shall fully explain all redundant and hot-standby functionality integrated into the design to achieve the highest system availability. The Offeror shall fully identify the host network controllers/servers for critical call processing databases, mobility and location registers.

  The Offeror shall state in the response the procedure and time required for switchover to a reduced functionality or conventional operating mode in the event of the failure of all trunked controller equipment. The proposed system must suffer multiple system element failures before a conventional or reduced capability operating mode is encountered. Offerors are nonetheless required to describe all such failure modes, regardless of how unlikely the occurrence.

Physical Separation of Critical ~~MNC~~ NCF Components

The County prefers that all critical ~~MNC~~ NCF and network management components be of a design that permits physically/geographically diverse installations whenever practical. Offerors are encouraged to design the proposed network in a manner that employs physical diversity of installed components whenever practical; however, when such a design technique is employed, the Offeror shall ensure that security measures designed to protect the network are equivalently maintained at all locations in which components have been installed.

- The Offeror shall fully identify the required network backbone transport and topology requirements to facilitate the proposed trunked system and ~~MNC~~ NCF subsystem. For example, the nature of site interconnection (i.e., star network, mesh network, loop network, etc.) shall be thoroughly defined. The Offeror shall fully define all site interconnection bandwidth and throughput requirements to support the proposed ~~MNC~~ NCF infrastructure and system as a whole. The network backbone timing and switching requirements shall be fully defined. The Offeror shall define the proposed system's compatibility with various types of site interconnection media: microwave radio, fiber, ~~-~~satellite, broadband cable, etc.

MNC NCF Features and Functions

Software and firmware to provide trunking functions and features described shall reside in the ~~MNC~~ NCF subsystem and associated computer software/hardware. The controller(s) and its associated computer software/hardware shall provide the following functions:

- Alarm Monitoring and Diagnostic Functionality - Monitoring of the operational status of all system devices and providing alarms when individual subsystems fail. Diagnostic functions shall allow an operator to view current status and status history of the system. It also shall allow for diagnostic tests to be performed on network devices (i.e. site controllers, base stations, comparators, routers/switches, etc.) to verify component and path integrity.
- Signaling (Control) Channel Backup/Rollover - Automatic transfer of signaling functions to another channel in the event of transmitter or receiver failure or interference on the signaling channel. The system shall have one active and a minimum of three backup signaling channels. Backup is defined as a channel of different frequency. Hot-standby backup of a signaling channel to a station of the same frequency is not acceptable. The Offeror shall define its control channel methodology.
- System Signaling & Special Functions
  - Signaling (Control) Channel Updating - The signaling channel shall continually transmit the current channel assignments of the system. This feature is intended to ensure that radios "signing on", coming into range or switching talkgroup modes, are directed to calls in progress on their selected talkgroup.
  - Voice Channel Embedded Signaling - Embedded signaling shall be transmitted on assigned voice channels in order to prevent subscriber units from being misdirected or allowed to transmit on an improperly assigned channel.
- Disabling of Failed Voice Channels - Automatic disablement of defective or degraded voice channels due to subsystem failure. Failures must be detected prior to the channel being assigned by the controller. Subsystem failures to be detected shall, at a minimum, include:
  - Low forward power
  - High-reflected power
  - Frequency drift
  - Unidentified carrier on unassigned voice channel
  - Signaling interface failure between base and controller
  - Audio and/or data circuit/packet failure between controller and base
  - Receiver failed/disabled
  - Voter failed/disabled.
- System Usage Reports - Collection and processing of data with regard to system usage. Offerors are to describe how the data is parsed for displaying at the NMS workstations. All reporting functions shall be easily exported into real-time, standardized, spreadsheet and word processing formats for easy retrieval and custom report formatting.
- Talkgroup Steering – Talkgroup steering shall allow talkgroup and individual calls to be directed or steered to a single or group of channels. This steering capability shall not prohibit any group from being allowed access to all channels. Talkgroup steering shall be definable at the “subsystem” level. Subsystem steering means that if multiple subsystems are networked together by a Master Network Controller/Switch, that partitioning “tables” shall be defined in each subsystem.

Wide Area Scalability

The proposed network infrastructure and ~~MNC subsystem~~NCF shall have the capability, despite no immediate County plans, to network to other regional ~~MNC~~ subsystems in a higher-tier form of wide-area radio system networking (i.e., capability to have multiple ~~MNC nodes~~RF Subsystems within a larger regional system) per the APCO P25 ISSI standard. Networking or interfacing in this case means the linking of systems at the highest possible level to allow seamless radio roaming (assuming the same frequency band) and equivalent trunking functionality within a larger regional network. The proposed system shall not preclude the networking of separate, additional, compatible trunked systems, procured at some possible future date, but shall enhance such expansion designs wherever possible.

- The ~~MNC~~ NCF shall support authorized roamers from compatible P25 digital systems for interagency assistance. The site (or RF subsystem) location of all subscriber units, including authorized roamers, shall be maintained by the ~~MNC~~NCF. Calls shall not require resources at sites that do not contain affiliated subscriber units (unless specifically provisioned by the network administrator to do so). RF subsystems shall contain all the control intelligence to support full feature provisioning, call processing, access protection and track unit location and roamers within the RF subsystem.

- All RF subsystems shall support standard signaling and communications interfaces to be flexibly linked into wider-area networks via private or public networks.

MNC NCF Minimum Equipment Specifications (Applies to all equipment associated with the NCF)

- Power Supply – Redundant, independent circuit 120 VAC/60 Hz power supplies to be protected by an uninterruptible power supply (UPS) that will prevent accidental shutdown of the ~~MNC subsystem controller(s)~~NCF components. Optionally, a secondary -48VDC power supply is encouraged to enhance the probability of maintaining ~~MNC~~ NCF operations during a major commercial power failure. The ~~MNC controller(s)~~NCF equipment shall be designed with an interlocking style power switch, protective cover, or secure cabinet so as to prevent an accidental, unintentional power-down. In the event of complete power failure, the ~~MNC~~ NCF shall be capable of an unattended, automatic graceful shutdown to prevent the corruption of database files and real-time operating systems. Power cabling interfaces to/from ~~the MNC controller(s)~~NCF components shall be supported from above using either overhead/aerial cable tray or from underneath via computer flooring. The Offeror shall be responsible for all required electrical and alarm wiring to commission the ~~MNC~~ NCF subsystem. The Offeror shall provide all grounding leads and connectors/lugs of sufficient gauge to properly bond all Offeror-provided equipment to the single point grounding system.

- Environmental – The Offeror shall identify the environmental operating characteristics of the proposed ~~MNC~~ NCF subsystem. The ~~MNC controller(s) and any auxiliary site controllers~~NCF components required at remote base station transceiver sites shall be designed to operate under the following conditions:

  Temperature:-30 degrees Celsius to +60 degrees Celsius.

  Humidity: 90% non-condensing.

  RF Fields: Equipment shall be properly shielded to allow proper, uninterrupted operation in equipment rooms or buildings occupied by base station transmitters/control stations/microwave radios generating strong RF fields. The ~~MNC~~ NCF equipment also shall be designed to suppress its own spurious emissions in concert with FCC Part 15 guidelines so that no detrimental interference is caused by the ~~MNC~~ NCF subsystem to the larger system.

  EMP: Electromagnetic pulse shielding is also desired as a network defense against possible acts of terrorism.

- Duty Cycle – All proposed online and standby equipment shall be rated for continuous duty operation.

- Hardware/Software Platform – The ~~MNC controller(s)~~NCF components shall be rack-mountable in standard 19- or 23-inch wide by 7.5-ft high EIA-style steel relay racks or in a 2-ft wide x 2-ft deep x 7.5-ft high standard computer server vented steel cabinet. Modular construction of the ~~MNC~~ NCF using plug-in circuit cards and blade-style servers is preferred. ~~The MNC controller(s)~~Equipment chassis shall be NEBS (Network Equipment Building System) compliant. The Offeror shall define the proposed ~~MNC~~ NCF hardware and software platform(s) and list the OEM Offeror for all key components and applications/operating systems. The Offeror shall define the product roadmap and upgradeability for all proposed ~~MNC controller(s)~~NCF components. The County requires the Offeror to meet or exceed all supportability and product lifecycle requirements for the ~~MNC~~ NCF subsystem as outlined throughout this specification.

- Data/Control Interfaces - All necessary interfaces with base repeaters, peripheral computer hardware, and the radio interconnect system shall be provided by the Offeror. Interfaces shall include cabling, networking equipment, and modems, all of which shall be identified in the Offeror's functional system diagrams. Cabling interfaces to/from the ~~MNC controller(s)~~NCF components shall be supported from above using either overhead/aerial cable tray or from underneath via raised computer access flooring. The Offeror shall define all electrical and physical interfaces between the ~~MNC~~ NCF and other system components in the required system functional diagrams. Cabling and equipment interfacing shall be executed in a manner to eliminate the ~~MNC~~ NCF and peripheral equipment from being susceptible to RF and electromagnetic interference (EMI) from collocated equipment. Proper cable shielding and design shall be used to ensure that the ~~MNC~~ NCF will not experience performance degradation due to collocated system equipment. Plenum-rated cabling shall be supplied whenever required by local code or system application.

- Craft Interfaces – The ~~MNC controller(s)~~NCF shall support two distinct and independent types of craft interfaces for remote and local provisioning and troubleshooting. The ~~MNC controller(s)~~NCF shall support an RS232 (VT100) style craft interface for a local or remote (if proper modem is utilized) terminal session craft interface to enable a technician or network administrator to provision or troubleshoot the ~~controller(s)~~NCF. The ~~MNC controller(s)~~NCF also shall support an Ethernet style craft interface for a local or remote (if network connectivity exists) TCP/IP craft interface to enable a technician or network administrator to provision or troubleshoot the ~~controller(s)~~NCF. The ability to provision or troubleshoot the ~~MNC controller(s)~~NCF through either interface shall not be dependent on the other interface being available. All craft interfaces shall provide password protection security. The ~~MNC controller(s)~~NCF shall be equipped to receive software upgrades/patch fixes through the craft interfaces, and the ~~MNC controller(s)~~NCF shall be capable of being upgraded without having to degrade or disturb the real-time call processing functionality provided by the ~~MNC~~NCF. The ~~MNC controller(s)~~NCF shall provide archive functionality for all configuration, provisioning, and troubleshooting parameters using standard storage media such as CD-R/W, DVD-R/W, DAT, etc. In the event of complete ~~MNC controller(s)~~NCF failure, the restoration and/or commissioning of new, replacement ~~MNC controller(s)~~NCF equipment shall be accomplished using archived provisioning/configuration images rather than requiring a technician to completely re-construct the configuration database from scratch. The Offeror shall fully define the provided capabilities with respect to ~~the MNC controller~~any NCF craft interfaces.

- ~~Radio Channel/Site Expansion Capabilities – The MNC controller(s) and any auxiliary site controllers~~NCF shall provide at each site for expansion to 24 channels or 30 unique radio talkpaths of operation at a minimum without hardware modifications. The ~~MNC~~ NCF shall be equipped to interface to a minimum of four additional ~~MNC controller(s)~~RF Subsystems or

"peer network" compatible P25 regional systems in the event of integration of a larger regional network.

- Local Site Control – Depending on the Offeror's ~~MNC network controller~~NCF architecture and hierarchy, local site controllers (if utilized) shall maintain a localized system database in the event that the ~~MNC controller~~primary NCF is severed from the local controllers. This local database shall be updated in real-time and shall be accessible locally and remotely via a craft interface. The local database shall contain all of the system access and functionality privileges to ensure a consistent level of system access and integrity during an ~~MNC controller~~NCF equipment outage.
- Alarms and Diagnostics - The ~~MNC controller(s) and associated site controllers~~NCF shall provide alarms for key operational parameters, and shall provide for remote inquiry display, disablement and diagnostic functions via RS232 and Ethernet connections. Alarms shall be displayed at all NMS workstations and through craft interfaces. The ~~MNC controller(s)~~NCF shall provide high-level diagnostic information ~~through front panel LEDs~~ and relevant indicators so that a technician or network administrator can quickly gauge the severity of an ~~MNC~~ NCF fault ~~by looking at the MNC~~via a visual indicator. The ~~MNC controller(s)~~NCF shall provide both alarm messages and fault conditions using SNMP~~ and discrete Form C relays~~. At a minimum, the ~~MNC controller(s)~~NCF shall provide Critical, Major, and Minor ~~relays~~ faults which may be ~~connected~~ reported to a separate alarm subsystem. All ~~MNC~~ NCF alarm information shall be time/date stamped in synchronization with the master network clock.

Revisions and Questions during Site Visits

Note: Grounding of vendor's equipment at Sheriff's primary Dispatch Center and the Communications Building – 1303 N. Milwaukee Avenue, Libertyville, IL 60048 (The dispatch center is part of the Communications Building) is responsibility of the vendor. The County will be responsible for designating or providing a common ground point at this location.

Appendix A, the Building Number 12 is added as follows:

- Central Permits – 500 W. Winchester Road, Libertyville, IL 60048
- Administration Tower – 18 N. County Street, Waukegan, IL 60085
- Babcox Center – 20 S. County Street, Waukegan, IL 60085
- Community Based Corrections Center (CBCC) - 15 South Martin Luther King Jr. Ave., Waukegan, IL 60085
- Sheriff's Office County 1 – 25 S. Martin Luther King Jr. Ave., Waukegan, IL 60085
- Sheriff's Office County 2 – 1301 N. Milwaukee Avenue, Libertyville, IL 60048
- Courts Complex – 18 N. County Street, Waukegan, IL 60085
- Depke Center - 24647 N Milwaukee Ave., Vernon Hills, Illinois 60061
- Communications Building – 1303 N. Milwaukee Avenue, Libertyville, IL 60048
- Health Department – 3010 Grand Avenue, Waukegan, IL 60085
- Forest Preserve District General Office – 1899 W. Winchester Road, Libertyville, IL 60048
- **Forest Preserve District OPS Building– 19808 West Grand Ave., Lindenhurst, IL 60046**

Note the following table is added to Appendix A:

- Item	- Must Cover Building	- Comments	- Are Elevators and enclosed stairwells excluded from the In-Building Coverage Requirements?
- 1	- Central Permits –	- All Floors are	- Yes

- Item	- Must Cover Building	- Comments	- Are Elevators and enclosed stairwells excluded from the In-Building Coverage Requirements?
	500 W. Winchester Road, Libertyville, IL 60048	included in the in-building coverage requirements.	
- 2	- Administration Tower – 18 N. County Street, Waukegan, IL 60085	- All Floors are included in the in-building coverage requirements. - **Attachment contains a diagram on the existing BDA antenna placements (Lake County Government Building).**	- Yes
- 3	- Babcox Center – 20 S. County Street, Waukegan, IL 60085	- All Floors are included in the in-building coverage requirements. - **Attachment contains a diagram on the existing BDA antenna placements.**	- No. Elevators and stairwells are included.
- 4	- Community Based Corrections Center (CBCC) - 15 South Martin Luther King Jr. Ave., Waukegan, IL 60085	- All Floors are included in the in-building coverage requirements.	- No. Elevators and stairwells are included.
- 5	- Sheriff's Office County 1 – 25 S. Martin Luther King Jr. Ave., Waukegan, IL 60085	- All Floors are included in the in-building coverage requirements.	- Yes
- 6	- Sheriff's Office County 2 – 1301 N. Milwaukee Avenue, Libertyville, IL 60048	- All Floors are included in the in-building coverage requirements.	- Yes

- Item	- Must Cover Building	- Comments	- Are Elevators and enclosed stairwells excluded from the In-Building Coverage Requirements?
- 7	- Courts Complex – 18 N. County Street, Waukegan, IL 60085	- All Floors are included in the in-building coverage requirements. - **Attachment contains a diagram on the existing BDA antenna placements (Lake County Government Building)**	- Yes
- 8	- Depke Center - 24647 N Milwaukee Ave., Vernon Hills, Illinois 60061	- **Need radio coverage inside Court Rooms 1 and 2.**	- Yes
- 9	- Communications Building – 1303 N. Milwaukee Avenue, Libertyville, IL 60048	- **One floor Building - All areas in the building are included in the in-building coverage requirements.**	- Yes
- 10	- Health Department – 3010 Grand Avenue, Waukegan, IL 60085	- All Floors are included in the in-building coverage requirements.	- Yes
- 11	- Forest Preserve District General Office – 1899 W. Winchester Road, Libertyville, IL 60048	- All Floors are included in the in-building coverage requirements.	- Yes
- 12	- Forest Preserve District OPS Building– 19808 West Grand Ave., Lindenhurst, IL 60046	- The separate garage facility behind the main building is not included in the in-building coverage. - **Floor Plans are attached.**	- Yes

Question: Please provide information on Existing Site Antenna Heights for the RF sites.
Response: Attached are the original drawings indicating the antenna assembly at the time of system implementation.

Question: At Waukegan RF site, are there any equipment that can be taken out to make room for the new?
Response: The row in the back contains conventional equipment that can be removed. One of the cabinets in that row contains County's IP equipment which can be moved by County elsewhere.

Question: What is site power sharing plans at the RF sites?
Response: See the table below:

- Site	- UPS	- Generator
- Libertyville Control Point	- County Owned, at the shelter	- County Owned, Next to the shelter.
- Lake Zurich	- County Owned, at the shelter	- Provided by Lessor
- Lake Villa	- County Owned, at the shelter	- Provided by Lessor
- Waukegan	- County Owned, at the shelter	- County owned
- Gurnee	- County Owned, at the shelter	- Provided by Lessor
- Highwood	- County Owned, at the shelter	- County owned, outside the Water Tower.

Question: Is use of leased T1 or other such lines allowed for interconnection of the radio and dispatch sites?
Response: No.

END ADDENDUM #2

PLEASE SIGN THIS FORM AND EMAIL TO PURCHASING@LAKECOUNTYIL.GOV OR FAX TO (847) 984-5889 WITHIN 24 BUSINESS HOURS. RETURN ORIGINAL WITH YOUR RFP
I will be submitting a RFP_____ or
I will not be submitting a RFP because _____
_____

Sincerely,

RuthAnne Hall
Lake County Purchasing Agent

Acknowledged and Accepted 13231-2:

Signature: _____

Company: _____

_____

LAKE COUNTY – Pre Proposal Meeting
Sign-in Record
September 12, 2013

Meeting Site: LC DOT (Libertyville)

Please Print Information

First and Last Name	Company or Organization	E-mail address	Phone#
Derek DiPietro	EF Johnson	ddipietro@efji.com	608 609 6503
WAYNE GROCHOWSKI	DIGITAL SKY	wgrocho498@gmail.com	708 932 4858
Bob Hecht	Digital Sky	bob@digitalsky	708-595-9135
SIXTO HERNANDEZ	BUCHHOLTZ CSM, INC.	SHERNANDEZ@BUCHHOLTZCSM.NET	847-445-4842
Dennis Buchholtz	Buchholtz CSM INC	dbuchholtz@buchholtzcsm.net	847-204-5335
RICHARD WOLF	RADICOM INC	RWOLF@RADICOM.COM	815-385-4224
CLIFF HAMMARSTROM	RADICOM INC	CHAMMAR@RADICOM.COM	815-385-4224
BOB LUEDERS	RADICOM, INC.	blueders@radicom.com	815-385-4224
Paul Hill	SPRINT	paul.hill@sprint.com	815-404-4109
Terry Brennan	RACOM	terry.brennan@racom.net	319.330.0937
CRAIG FITZSIMMONS	HARRIS	CFITZ501@harris.com	630-443-7346

LAKE COUNTY – Pre Proposal Meeting
Sign-in Record
September 12, 2013

Meeting Site: LC DOT (Libertyville)

Please Print Information

First and Last Name	Company or Organization	E-mail address	Phone#
MICHAEL ENGELHAUPT	TAIT COMMUNICATIONS	MICHAEL.ENGELHAUPT@TAITRADIO.COM	832-557-7482
Scott Skibness	TAIT COMMUNICATIONS	SCOTT.SKIBNESS@TAITRADIO.com	713-703-4378
DAREK WIECZOREK	TAIT COMMUNICATIONS	DAREK.WIECZOREK@TAITRADIO.COM	859-420-8428
Peggy Sleik	Tait Communications	Peggy.sleik@taitradio.com	630.778.7919
Chris Sarantos	Harris	chris.Sarantos@Harris.com	434-851-4336
Mike Ryan	"	MRYAN06@harris.com	561-251-2313
Nick Scardino	"	NGcardin@harris.com	321-412-3846
Jeff Stowasser	Motorola Solutions	Jeff.Stowasser@Motorolasolutions.com	847-989-0689
PAT HUGHES	MOTOROLA	PAT.HUGHES@MOTOROLASOLUTIONS.COM	847 514-7128
ALPHONSO HAMILTON	CASSIDIAN COMMUNICATIONS	ALPHONSO.HAMILTON@CASSIDIANCOMMUNICATIONS.COM	214-425-7043
RAVI DHOOPHUR	MOTOROLA Solutions	ARD099@MOTOROLASOLUTIONS.COM	847-875-2507
John Plavsic	Motorola Solutions	C25868@MotorolaSolutions.com	847-343-4117

Lake County Jail- BDA Diagram

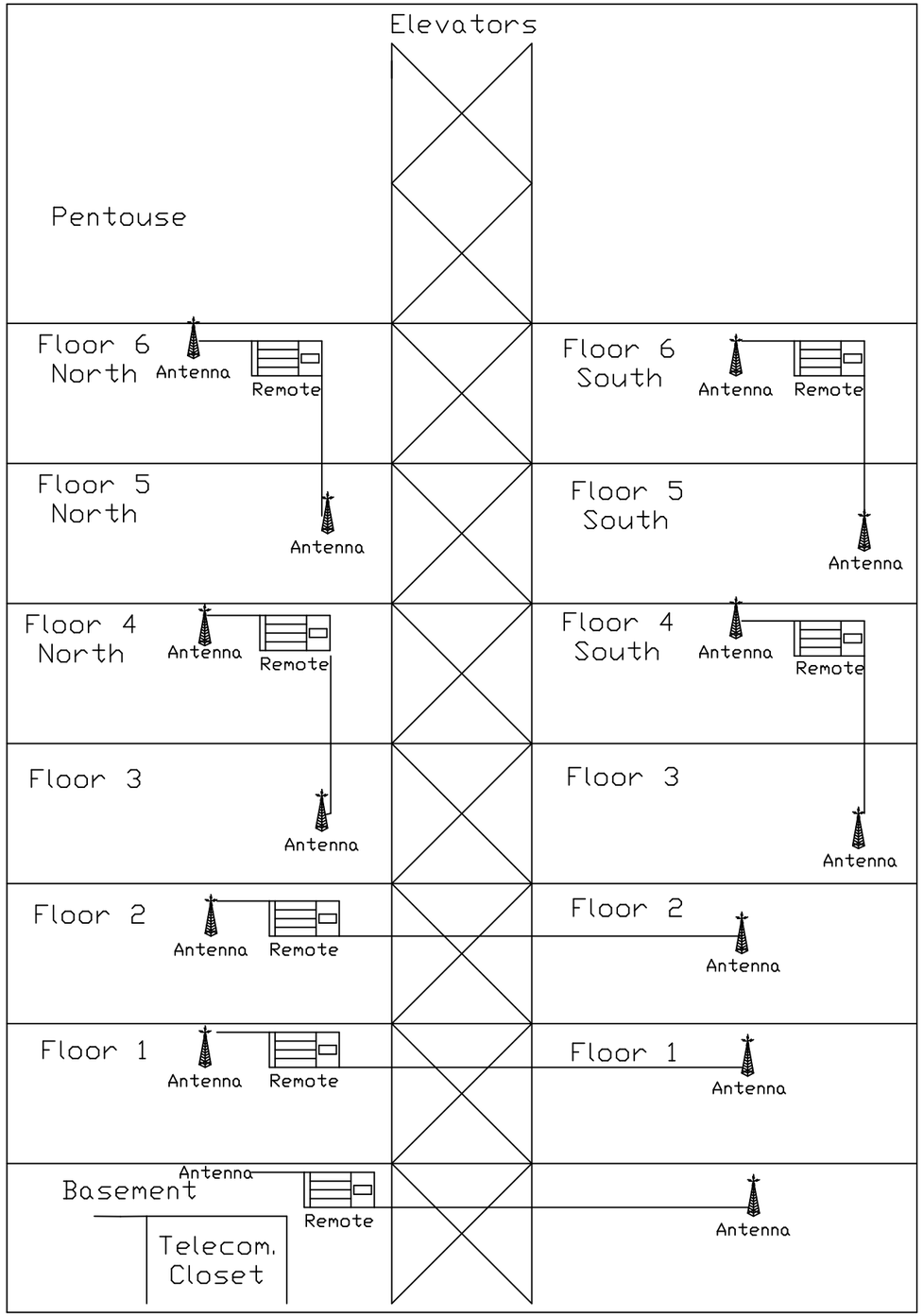

Coaxial cable runs from the remotes out to antennas. Fiber Optic cables run from remotes down to the Telecom closet in the basement where they are connected to the Bidirectional Amplification system, or the slave rack. That BDA is the remote feed from the County building up the street. That is located on the top floor of that building. The main amp, or donor rack, and the remote amp are connected via fiber optic cable. This whole setup in turn is connected to the GPS Simulcast TX Site TR shelf located in the Combiner RX multicoupler Rack.

GenNet Division	Prepared (also subject responsible if other) T.VAUGHTER		
References FMF :LAKE COUNTY FCFO :80219 CAD :F0104139 SCALE:	Doc respons/Approved (R.BOLSTAD)	Date 2001/04/27	Rev A
	Product name LAKE COUNTY JAIL BDA DIAGRAM		
	Document No SP00-SY101197V6	Sheet 1 (1)	

L59

Lake County Government building - BDA Placement diagram

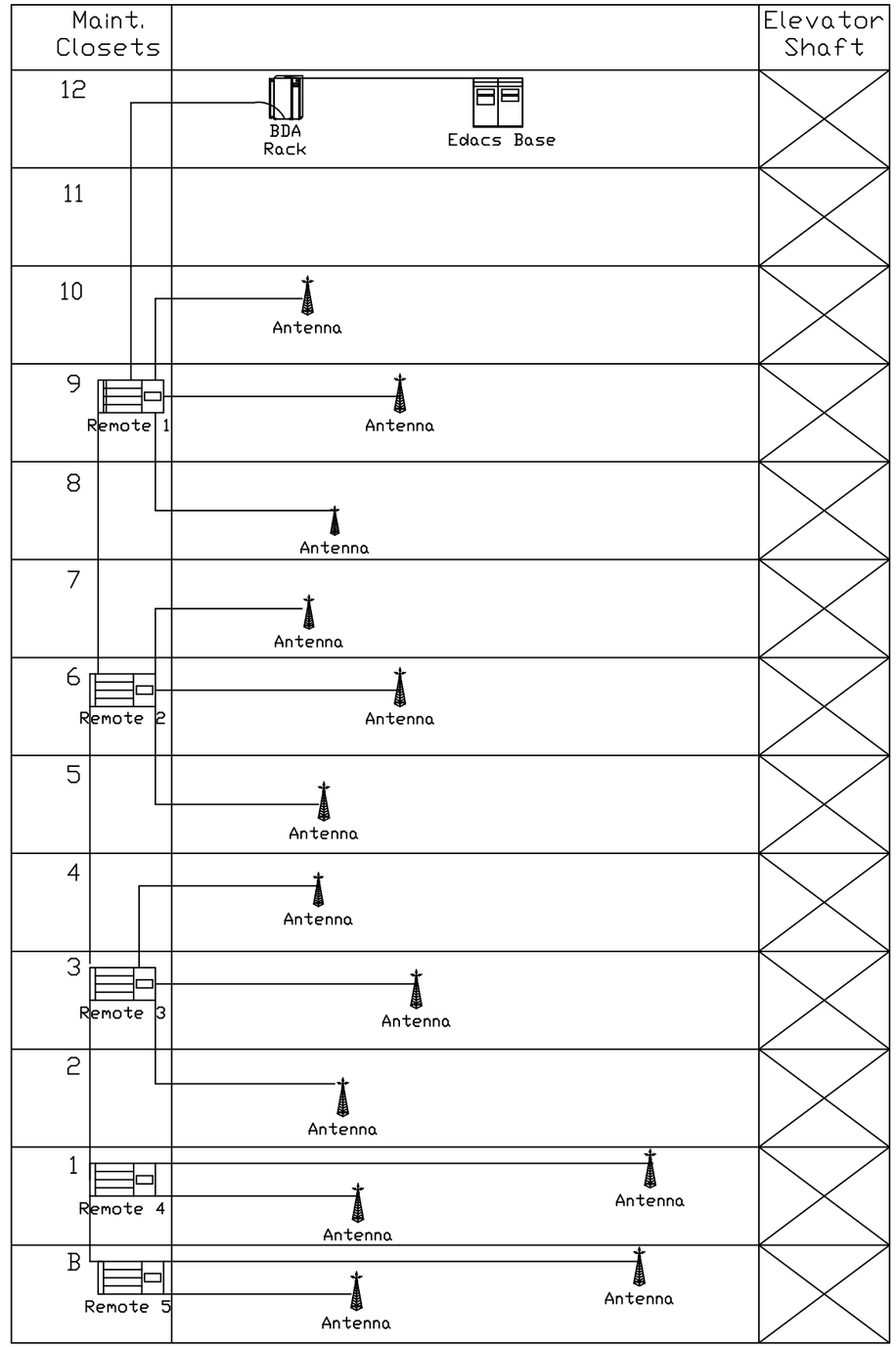

SprintNet Division ELECTRICAL SUPPLY SYSTEMS		Prepared (also subject responsible if other) T.VAUGHTER	
References FMF :LAKE COUNTY FCFO :80219 CAD :F0104140 SCALE:		Doc respons/Approved (R.BOLSTAD)	Date 2001/04/27 / Rev A
		Product name LAKE COUNTY GOV. BUILDING BDA DIAGRAM	
		Document No SP01-SY101197V6	Sheet 1 (1)

L59

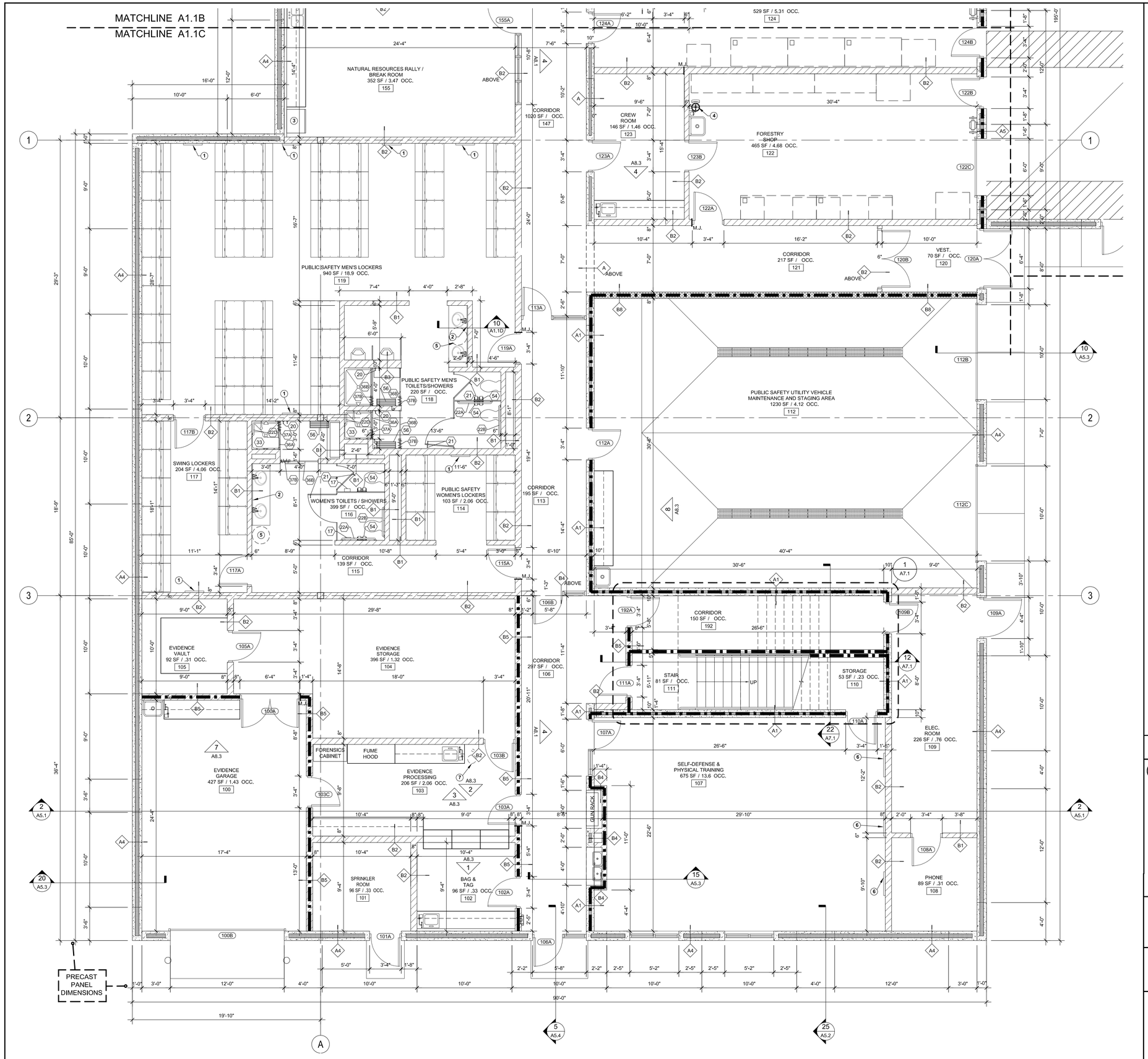

ENLARGED FIRST FLOOR PLAN- ZONE C

SCALE: 1/4" = 1'-0" (10)

GRAPHIC	MARK	DESCRIPTION
10"	A	10" THICK PRECAST CONCRETE SANDWICH WALL PANEL. 3 1/2" CONCRETE OUTER WYTHE, 3" RIGID INSULATION, 3 1/2" CONCRETE INNER WYTHE. LOAD BEARING UNLESS NOTED OTHERWISE. MINIMUM R. VALUE = 15. HAND TROWEL INSIDE FACE OF PANEL SMOOTH. SEE WALL SECTIONS/STRUCTURAL DRAWINGS FOR BEARING ELEVATIONS, POCKETS, AND PANEL HEIGHTS.
10"	A1	SAME AS WALL TYPE 'A' ABOVE. PROVIDE 1-HOUR FIRE RATED ASSEMBLY. U.L. DESIGN NO. U-923.
12" NOM.	A2	5/8" TYPE "X" GYPSUM BOARD AND VAPOR BARRIER TO 6" ABOVE THE TOP SIDE OF FINISHED CEILING SYSTEM ON 1 5/8" METAL STUDS SPACED AT 16" O.C. WITH CONTINUOUS RUNNERS TOP AND BOTTOM. PROVIDE 1 1/2" RIGID POLYSTYRENE INSULATION (MINIMUM R. VALUE = 7.5) BETWEEN METAL STUDS. GYPSUM BOARD, VAPOR BARRIER, METAL STUDS, AND RIGID INSULATION ON ONE SIDE OF PRECAST CONCRETE WALL PANEL. SEE WALL TYPE 'A' ABOVE FOR CONCRETE WALL PANEL DESCRIPTION.
NOM.	A3	SAME AS WALL TYPE 'A2' ABOVE. PROVIDE 1-HOUR FIRE RATED ASSEMBLY. U.L. DESIGN NO. U-923.
NOM.	A4	12" THICK PRECAST CONCRETE SANDWICH WALL PANEL. 3 1/2" CONCRETE OUTER WYTHE, 5" RIGID INSULATION, 3 1/2" CONCRETE INNER WYTHE. LOAD BEARING UNLESS NOTED OTHERWISE. MINIMUM R. VALUE = 25. HAND TROWEL INSIDE FACE OF PANEL SMOOTH. SEE WALL SECTIONS/STRUCTURAL DRAWINGS FOR BEARING ELEVATIONS, POCKETS, AND PANEL HEIGHTS. THIS **ALTERNATE A-1** ACCEPTED.
NOM.	A5	SAME AS WALL TYPE 'A4' ABOVE. PROVIDE 1-HOUR FIRE RATED ASSEMBLY. U.L. DESIGN NO. U-923.

GRAPHIC	MARK	DESCRIPTION
4" NOM.	B	4" CONCRETE MASONRY UNIT. RUNNING BOND. SECURE TO STRUCTURE TOP AND BOTTOM. SEE STRUCTURAL DRAWINGS FOR REINFORCING/DETAILS. BULLNOSE EXPOSED EDGES.
6" NOM.	B1	6" CONCRETE MASONRY UNIT. RUNNING BOND. SECURE TO STRUCTURE TOP AND BOTTOM. SEE STRUCTURAL DRAWINGS FOR REINFORCING/DETAILS. BULLNOSE EXPOSED EDGES.
8" NOM.	B2	8" CONCRETE MASONRY UNIT. RUNNING BOND. SECURE TO STRUCTURE TOP AND BOTTOM. SEE STRUCTURAL DRAWINGS FOR REINFORCING/DETAILS. BULLNOSE EXPOSED EDGES.
10" NOM.	B3	10" CONCRETE MASONRY UNIT. RUNNING BOND. SECURE TO STRUCTURE TOP AND BOTTOM. SEE STRUCTURAL DRAWINGS FOR REINFORCING/DETAILS. BULLNOSE EXPOSED EDGES.
6" NOM.	B4	SAME AS WALL TYPE 'B1' ABOVE. 1-HOUR FIRE RATED ASSEMBLY. U.L. DESIGN NO. U-906.
8" NOM.	B5	SAME AS WALL TYPE 'B2' ABOVE. 1-HOUR FIRE RATED ASSEMBLY. U.L. DESIGN NO. U-905.
6" OR 8" NOM.	B6	6" OR 8" CONCRETE MASONRY UNIT. RUNNING BOND. HALF HEIGHT WALL TO 3'-4" A.F.F. TOP UNIT TO BE DOUBLE BULLNOSE SOLID UNIT. BULLNOSE EXPOSED CORNERS.
6", 8", 10" NOM.	B7	6", 8", 10" CONCRETE MASONRY UNIT. RUNNING BOND. SECURE TO STRUCTURE TOP AND BOTTOM. SEE STRUCTURAL DRAWINGS FOR REINFORCING/DETAILS. BULLNOSE EXPOSED EDGES. FILL CORES WITH FOAM INSULATION. BASIS OF DESIGN: CORE-FILL 500 BY TAILORED CHEMICAL PRODUCTS, INC. WWW.CORE-FILL500.COM PHONE: (800) 627-1687. EQUAL PRODUCTS WILL BE CONSIDERED.
6" OR 8" NOM.	B8	SAME AS WALL TYPE 'B7' ABOVE. 1-HOUR FIRE RATED ASSEMBLY. U.L. DESIGN NO. U-905.
8" NOM.	B9	SAME AS WALL TYPE 'B1' ABOVE. FILL CORES WITH SAND.
8" NOM.	B10	8" CONCRETE MASONRY UNIT. BURNISHED CMU. RUNNING BOND. SECURE TO STRUCTURE TOP AND BOTTOM. SEE STRUCTURAL DRAWINGS FOR REINFORCING/DETAILS. BULLNOSE EXPOSED EDGES.

GRAPHIC	MARK	DESCRIPTION
10" NOM.	C	6" CONCRETE MASONRY UNIT. RUNNING BOND. SECURE TO STRUCTURE TOP AND BOTTOM. 5/8" TYPE "X" GYPSUM BOARD TO 6" ABOVE THE TOP SIDE OF FINISHED CEILING SYSTEM ON 1 5/8" METAL STUDS SPACED AT 16" O.C. WITH CONTINUOUS RUNNERS TOP AND BOTTOM ON BOTH SIDES OF C.M.U. WALL CONSTRUCTION.
10" NOM.	C1	8" CONCRETE MASONRY UNIT. RUNNING BOND. SECURE TO STRUCTURE TOP AND BOTTOM. 5/8" TYPE "X" GYPSUM BOARD TO 6" ABOVE THE TOP SIDE OF FINISHED CEILING SYSTEM ON 1 5/8" METAL STUDS SPACED AT 16" O.C. WITH CONTINUOUS RUNNERS TOP AND BOTTOM ON ONE SIDE OF C.M.U. WALL CONSTRUCTION.
10" NOM.	C2	SAME AS WALL TYPE 'C1' ABOVE. 1-HOUR FIRE RATED ASSEMBLY. MASONRY CONSTRUCTION PER U.L. DESIGN NO. U-905.
12" NOM.	C3	10" CONCRETE MASONRY UNIT. RUNNING BOND. SECURE TO STRUCTURE TOP AND BOTTOM. 5/8" TYPE "X" GYPSUM BOARD OVER VAPOR BARRIER TO 6" ABOVE THE TOP SIDE OF FINISHED CEILING SYSTEM ON 1 5/8" METAL STUDS SPACED AT 16" O.C. WITH CONTINUOUS RUNNERS TOP AND BOTTOM ON ONE SIDE OF C.M.U. WALL CONSTRUCTION. PROVIDE 1 1/2" RIGID POLYSTYRENE INSULATION (MINIMUM R. VALUE = 7.5) BETWEEN METAL STUDS.

WALL TYPES

NOT TO SCALE (4)

FLOOR PLAN KEYNOTES (THIS SHEET ONLY)

1. MIRROR. GLASS. PROVIDED BY GLAZING CONTRACTOR IN BID RELEASE #2. SINGLE PIECE. 2'-0" WIDE X 5'-0" TALL. MOUNT 12" ABOVE FINISH FLOOR. MIRROR TO BE FRAMELESS WITH BEVELED EDGES AND ALL SIDES OF MIRROR POLISHED.
2. MIRROR. GLASS. PROVIDED BY GLAZING CONTRACTOR IN BID RELEASE #2. SINGLE PIECE. 6'-6" WIDE X 4'-0" TALL. MOUNT ABOVE COUNTERTOP BACKSPLASH. MIRROR TO BE FRAMELESS WITH BEVELED EDGES AND ALL SIDES OF MIRROR POLISHED.
3. REFRIGERATOR. BY OWNER.
4. EYEWASH WITH DUST COVER. REFER TO PLUMBING DRAWINGS.
5. SUGGESTED LOCATION OF TRASH CAN BY OWNER.
6. MIRROR. GLASS. PROVIDED BY GLAZING CONTRACTOR IN BID RELEASE #2. SINGLE PIECE. 2'-6" WIDE X 5'-0" TALL. MOUNT 12" ABOVE FINISH FLOOR. MIRROR TO BE FRAMELESS WITH BEVELED EDGES AND ALL SIDES OF MIRROR POLISHED.
7. DRENCH SHOWER RECESSED IN CEILING ABOVE. SEE PLUMBING DRAWINGS.

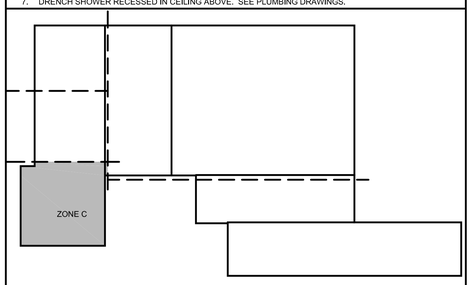

KEY PLAN

NOT TO SCALE (5)

COPYRIGHT © 2008
williams/associates/architects, ltd.

LAKE COUNTY FOREST PRESERVE DISTRICT OPERATIONS AND PUBLIC SAFETY FACILITY
19808 WEST GRAND AVENUE
LINDENHURST, IL 60046

was to	2006 - 1035
date	01 OCTOBER 2008 - B.R. #2- PERMIT RVW.
drawn	JAO, DAM
checked	MSB, LMK
revised	

NORTH

WILLIAMS ARCHITECTS
ARCHITECTS PLANNERS
405 E. Eastwood Dr., Cord Stream, Illinois 60108
Phone 630-521-1412 | Fax 630-521-1420

ENLARGED FLOOR PLAN- ZONE C

A1.1C

BID RELEASE # 2

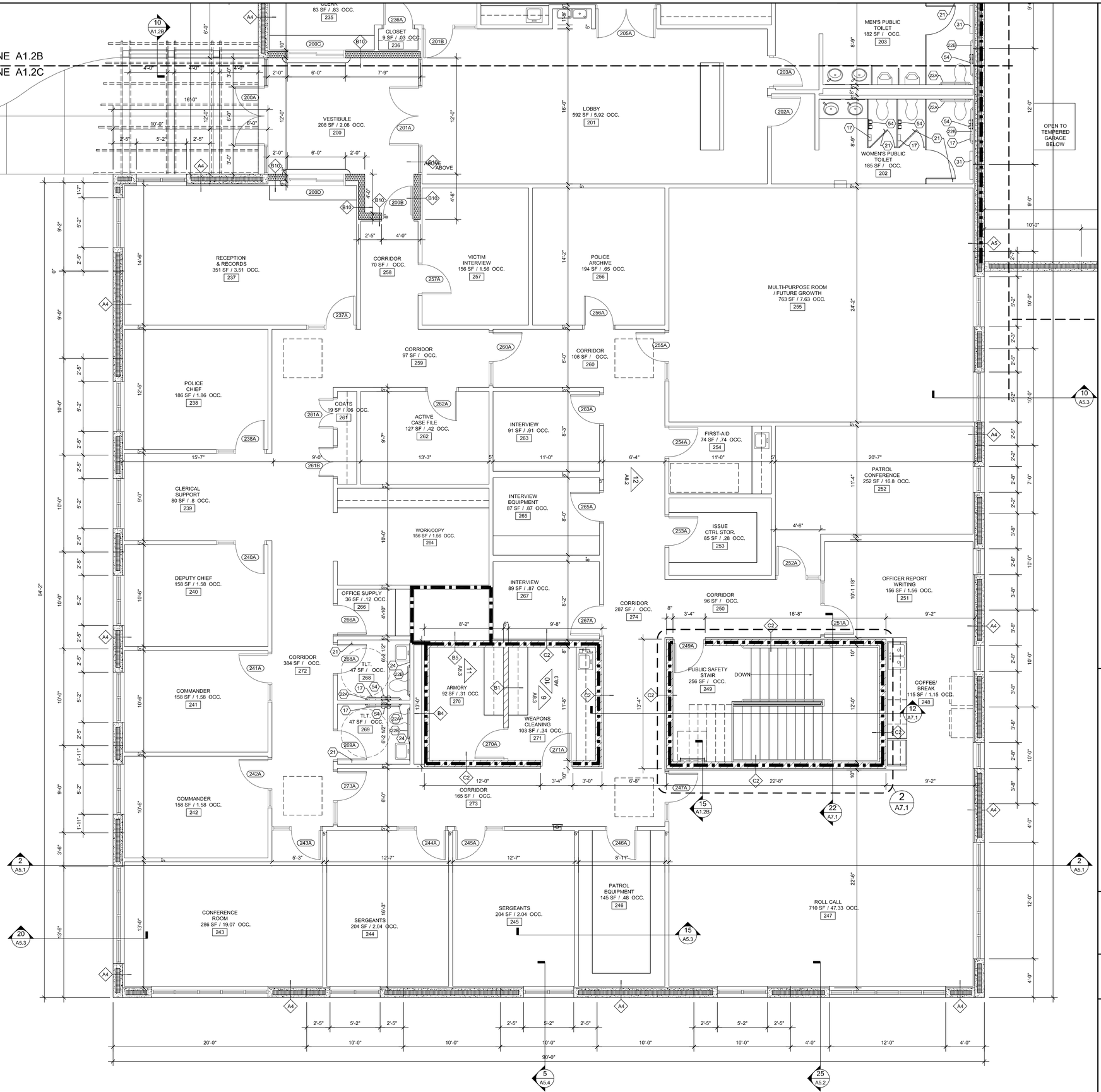

ENLARGED SECOND FLOOR PLAN- ZONE C

SCALE: 1/4" = 1'-0" (10)

TOILET ACCESSORIES LEGEND

SEE TOILET ACCESSORIES LEGEND - 12/A7.3 FOR FURTHER DETAIL.

- (17) NAPKIN DISPOSAL.
- (20) ROBE / CLOTHES HOOK.
- (21) CLOTHES HOOK.
- (22A) GRAB BARS (36").
- (22B) GRAB BARS (42").
- (22C) GRAB BARS (48").
- (22D) GRAB BARS (CORNER).
- (24) MIRROR WITH CHANNEL FRAME.
- (31) DIAPER CHANGING STATION (HORIZONTAL).
- (33) FOLDING SHOWER SEAT.
- (36A) SHOWER ROD (36").
- (36B) SHOWER ROD (48").
- (36C) SHOWER ROD (60").
- (37A) SHOWER CURTAIN & RINGS (36").
- (37B) SHOWER CURTAIN & RINGS (48").
- (37C) SHOWER CURTAIN & RINGS (72").
- (54) TOILET TISSUE DISPENSER.
- (56) TOWEL SHELF / TOWEL BAR.

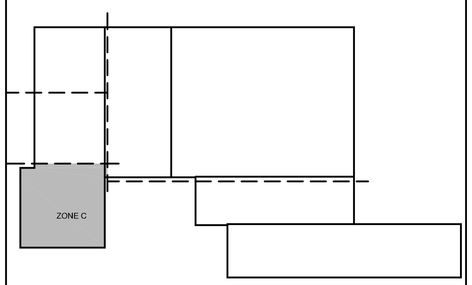

KEY PLAN

NOT TO SCALE (5)

COPYRIGHT © 2008
williams/associates/architects, ltd.

LAKE COUNTY FOREST PRESERVE DISTRICT
OPERATIONS AND PUBLIC SAFETY FACILITY
19808 WEST GRAND AVENUE
LINDENHURST, IL 60046

was to	2006 - 035
date	01 OCTOBER 2008 - B.R. #2- PERMIT R/V/W.
drawn	JAO, DAM
checked	MSB, LMK
revised	

NORTH

WILLIAMS
ARCHITECTS
ARCHITECTS PLANNERS
405 E. Evergreen Pl., Coral Stream, Illinois 60188
Phone 630-221-1212 / Fax 630-221-1220

ENLARGED FLOOR PLAN- ZONE C

A1.2C

BID RELEASE # 2

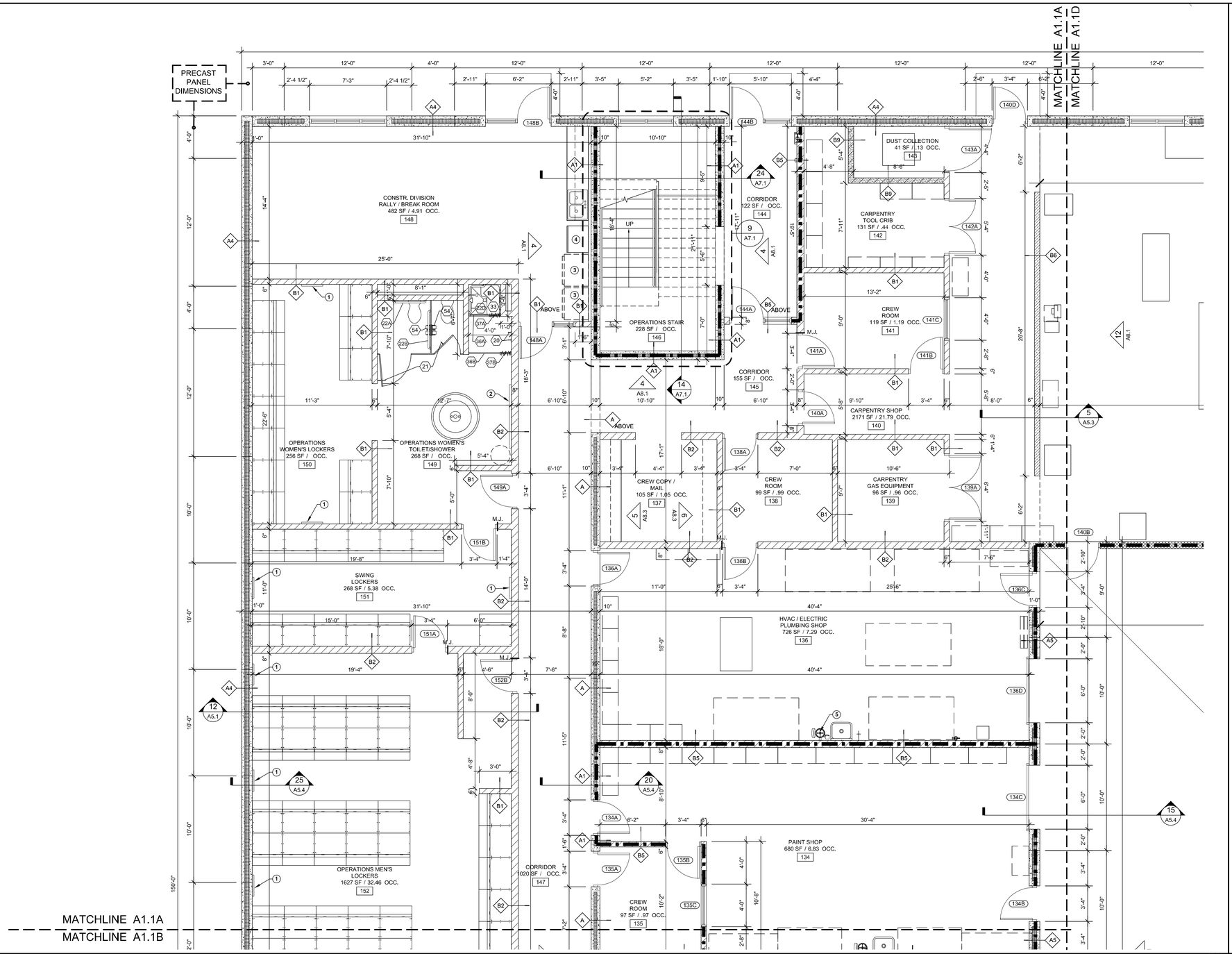

ENLARGED FIRST FLOOR PLAN- ZONE A

SCALE: 1/4" = 1'-0" 9

WALL TYPES

NOT TO SCALE 4

GRAPHIC	MARK	DESCRIPTION
10"	A	10" THICK PRECAST CONCRETE SANDWICH WALL PANEL. 3 1/2" CONCRETE OUTER WYTHE, 3" RIGID INSULATION, 3 1/2" CONCRETE INNER WYTHE. LOAD BEARING UNLESS NOTED OTHERWISE. MINIMUM R. VALUE = 15. HAND TROWEL INSIDE FACE OF PANEL SMOOTH. SEE WALL SECTIONS/STRUCTURAL DRAWINGS FOR BEARING ELEVATIONS, POCKETS, AND PANEL HEIGHTS.
10"	A1	SAME AS WALL TYPE 'A' ABOVE. PROVIDE 1-HOUR FIRE RATED ASSEMBLY. U.L. DESIGN NO. U-923.
12" NOM.	A2	5/8" TYPE "X" GYPSUM BOARD AND VAPOR BARRIER TO 6" ABOVE THE TOP SIDE OF FINISHED CEILING SYSTEM ON 1 5/8" METAL STUDS SPACED AT 16" O.C. WITH CONTINUOUS RUNNERS TOP AND BOTTOM. PROVIDE 1 1/2" RIGID POLYSTYRENE INSULATION (MINIMUM R. VALUE = 7.5) BETWEEN METAL STUDS. GYPSUM BOARD, VAPOR BARRIER, METAL STUDS, AND RIGID INSULATION ON ONE SIDE OF PRECAST CONCRETE WALL PANEL. SEE WALL TYPE 'A' ABOVE FOR CONCRETE WALL PANEL DESCRIPTION.
NOM.	A3	SAME AS WALL TYPE 'A2' ABOVE. PROVIDE 1-HOUR FIRE RATED ASSEMBLY. U.L. DESIGN NO. U-923.
NOM.	A4	12" THICK PRECAST CONCRETE SANDWICH WALL PANEL. 3 1/2" CONCRETE OUTER WYTHE, 5" RIGID INSULATION, 3 1/2" CONCRETE INNER WYTHE. LOAD BEARING UNLESS NOTED OTHERWISE. MINIMUM R. VALUE = 25. HAND TROWEL INSIDE FACE OF PANEL SMOOTH. SEE WALL SECTIONS/STRUCTURAL DRAWINGS FOR BEARING ELEVATIONS, POCKETS, AND PANEL HEIGHTS. THIS **ALTERNATE A-1** ACCEPTED.
NOM.	A5	SAME AS WALL TYPE 'A4' ABOVE. PROVIDE 1-HOUR FIRE RATED ASSEMBLY. U.L. DESIGN NO. U-923.

GRAPHIC	MARK	DESCRIPTION
4" NOM.	B	4" CONCRETE MASONRY UNIT. RUNNING BOND. SECURE TO STRUCTURE TOP AND BOTTOM. SEE STRUCTURAL DRAWINGS FOR REINFORCING/DETAILS. BULLNOSE EXPOSED EDGES.
6" NOM.	B1	6" CONCRETE MASONRY UNIT. RUNNING BOND. SECURE TO STRUCTURE TOP AND BOTTOM. SEE STRUCTURAL DRAWINGS FOR REINFORCING/DETAILS. BULLNOSE EXPOSED EDGES.
8" NOM.	B2	8" CONCRETE MASONRY UNIT. RUNNING BOND. SECURE TO STRUCTURE TOP AND BOTTOM. SEE STRUCTURAL DRAWINGS FOR REINFORCING/DETAILS. BULLNOSE EXPOSED EDGES.
10" NOM.	B3	10" CONCRETE MASONRY UNIT. RUNNING BOND. SECURE TO STRUCTURE TOP AND BOTTOM. SEE STRUCTURAL DRAWINGS FOR REINFORCING/DETAILS. BULLNOSE EXPOSED EDGES.
6" NOM.	B4	SAME AS WALL TYPE 'B1' ABOVE. 1-HOUR FIRE RATED ASSEMBLY. U.L. DESIGN NO. U-906.
8" NOM.	B5	SAME AS WALL TYPE 'B2' ABOVE. 1-HOUR FIRE RATED ASSEMBLY. U.L. DESIGN NO. U-905.
6" OR 8" NOM.	B6	6" OR 8" CONCRETE MASONRY UNIT. RUNNING BOND. HALF HEIGHT WALL TO 3'-4" A.F.F. TOP UNIT TO BE DOUBLE BULLNOSE SOLID UNIT. BULLNOSE EXPOSED CORNERS.
6", 8", 10" NOM.	B7	6", 8", 10" CONCRETE MASONRY UNIT. RUNNING BOND. SECURE TO STRUCTURE TOP AND BOTTOM. SEE STRUCTURAL DRAWINGS FOR REINFORCING/DETAILS. BULLNOSE EXPOSED EDGES. FILL CORES WITH FOAM INSULATION. BASIS OF DESIGN: CORE-FILL 500 BY TAILORED CHEMICAL PRODUCTS, INC. WWW.CORE-FILL500.COM PHONE: (800) 627-1687. EQUAL PRODUCTS WILL BE CONSIDERED.
6" OR 8" NOM.	B8	SAME AS WALL TYPE 'B7' ABOVE. 1-HOUR FIRE RATED ASSEMBLY. U.L. DESIGN NO. U-905.
6" NOM.	B9	SAME AS WALL TYPE 'B1' ABOVE. FILL CORES WITH SAND.
8" NOM.	B10	8" CONCRETE MASONRY UNIT. BURNISHED CMU. RUNNING BOND. SECURE TO STRUCTURE TOP AND BOTTOM. SEE STRUCTURAL DRAWINGS FOR REINFORCING/DETAILS. BULLNOSE EXPOSED EDGES.

GRAPHIC	MARK	DESCRIPTION
10" NOM.	C	6" CONCRETE MASONRY UNIT. RUNNING BOND. SECURE TO STRUCTURE TOP AND BOTTOM. 5/8" TYPE "X" GYPSUM BOARD TO 6" ABOVE THE TOP SIDE OF FINISHED CEILING SYSTEM ON 1 5/8" METAL STUDS SPACED AT 16" O.C. WITH CONTINUOUS RUNNERS TOP AND BOTTOM ON BOTH SIDES OF C.M.U. WALL CONSTRUCTION.
10" NOM.	C1	8" CONCRETE MASONRY UNIT. RUNNING BOND. SECURE TO STRUCTURE TOP AND BOTTOM. 5/8" TYPE "X" GYPSUM BOARD TO 6" ABOVE THE TOP SIDE OF FINISHED CEILING SYSTEM ON 1 5/8" METAL STUDS SPACED AT 16" O.C. WITH CONTINUOUS RUNNERS TOP AND BOTTOM ON ONE SIDE OF C.M.U. WALL CONSTRUCTION.
10" NOM.	C2	SAME AS WALL TYPE 'C1' ABOVE. 1-HOUR FIRE RATED ASSEMBLY. MASONRY CONSTRUCTION PER U.L. DESIGN NO. U-905.
12" NOM.	C3	10" CONCRETE MASONRY UNIT. RUNNING BOND. SECURE TO STRUCTURE TOP AND BOTTOM. 5/8" TYPE "X" GYPSUM BOARD OVER VAPOR BARRIER TO 6" ABOVE THE TOP SIDE OF FINISHED CEILING SYSTEM ON 1 5/8" METAL STUDS SPACED AT 16" O.C. WITH CONTINUOUS RUNNERS TOP AND BOTTOM ON ONE SIDE OF C.M.U. WALL CONSTRUCTION. PROVIDE 1 1/2" RIGID POLYSTYRENE INSULATION (MINIMUM R. VALUE = 7.5) BETWEEN METAL STUDS.

M.J. — DESIGNATION M.J. (TYPICAL ALL SHEETS) INDICATES CONCRETE MASONRY UNIT VERTICAL MOVEMENT JOINT ABOVE DOOR OR WINDOW. HORIZONTAL REINFORCING TO BE DISCONTINUOUS AT EACH VERTICAL MOVEMENT JOINT. PROVIDE CONTINUOUS CAULK AND BACKER ROD ALONG BOTH SIDES OF JOINT. TYPICAL AT ALL MOVEMENT JOINTS.

NOTE: MASON TO PROVIDE BOND BEAMS OVER ALL OPENINGS 4'-0" WIDE OR LESS INCLUDING BUT NOT LIMITED TO DOORS, WINDOWS, AND LOUVERS. *NO EXCEPTIONS*. SEE SHEET S4.0, MISCELLANEOUS LINTEL SCHEDULE, FOR REINFORCING REQUIREMENTS AND DETAILS.

TOILET ACCESSORIES LEGEND

SEE TOILET ACCESSORIES LEGEND - 12/A7.3 FOR FURTHER DETAIL.

- 17 NAPKIN DISPOSAL.
- 20 ROBE / CLOTHES HOOK.
- 21 CLOTHES HOOK.
- 22A GRAB BARS (36").
- 22B GRAB BARS (42").
- 22C GRAB BARS (48").
- 22D GRAB BARS (CORNER).
- 24 MIRROR WITH CHANNEL FRAME.
- 31 DIAPER CHANGING STATION (HORIZONTAL).
- 33 FOLDING SHOWER SEAT.
- 36A SHOWER ROD (36").
- 36B SHOWER ROD (48").
- 36C SHOWER ROD (60").
- 37A SHOWER CURTAIN & RINGS (36").
- 37B SHOWER CURTAIN & RINGS (48").
- 37C SHOWER CURTAIN & RINGS (72").
- 54 TOILET TISSUE DISPENSER.
- 56 TOWEL SHELF / TOWEL BAR.

FLOOR PLAN KEYNOTES (THIS SHEET ONLY)

1. MIRROR. GLASS. PROVIDED BY GLAZING CONTRACTOR IN BID RELEASE #2. SINGLE PIECE. 2'-0" WIDE X 5'-0" TALL. MOUNT 12" ABOVE FINISH FLOOR. MIRROR TO BE FRAMELESS WITH BEVELED EDGES AND ALL SIDES OF MIRROR POLISHED.
2. MIRROR. GLASS. PROVIDED BY GLAZING CONTRACTOR IN BID RELEASE #2. SINGLE PIECE. 6'-0" WIDE X 4'-0" TALL. MOUNT ABOVE MAKE UP COUNTER. MIRROR TO BE FRAMELESS WITH BEVELED EDGES AND ALL SIDES OF MIRROR POLISHED.
3. VENDING MACHINE. BY OWNER.
4. REFRIGERATOR. BY OWNER.
5. EYEWASH WITH DUST COVER. REFER TO PLUMBING DRAWINGS.

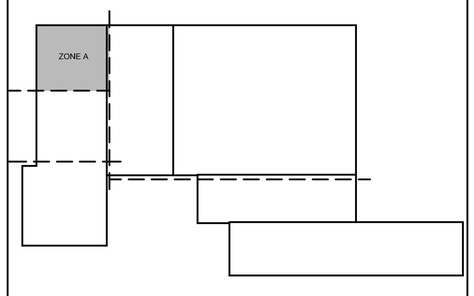

KEY PLAN

NOT TO SCALE 5

COPYRIGHT © 2008
williams/associates/architects, ltd.

LAKE COUNTY FOREST PRESERVE DISTRICT
OPERATIONS AND PUBLIC SAFETY FACILITY
19808 WEST GRAND AVENUE
LINDENHURST, IL 60046

was no	2006 - 035
date	01 OCTOBER 2008 - B.R. #2- PERMIT R/VW.
drawn	JAO, DAM
checked	MSB, LMK
revised	

NORTH

WILLIAMS
ARCHITECTS
ARCHITECTS PLANNERS
430 E. Eastwood Dr., Lake Bluff, Illinois 60158
Phone 847-821-7421 / Fax 847-821-7426

ENLARGED FLOOR PLAN- ZONE A

A1.1A

BID RELEASE # 2

FLOOR PLAN KEYNOTES (THIS SHEET ONLY)

1. MIRROR. GLASS. PROVIDED BY GLAZING CONTRACTOR IN BID RELEASE #2. SINGLE PIECE. 2'-0" WIDE X 5'-0" TALL. MOUNT 12" ABOVE FINISH FLOOR. MIRROR TO BE FRAMELESS WITH BEVELED EDGES AND ALL SIDES OF MIRROR POLISHED.
2. MIRROR. GLASS. PROVIDED BY GLAZING CONTRACTOR IN BID RELEASE #2. SINGLE PIECE. 6'-0" WIDE X 4'-0" TALL. MOUNT BOTTOM EDGE AT 3'-2" ABOVE FINISHED FLOOR. MIRROR TO BE FRAMELESS WITH BEVELED EDGES AND ALL SIDES OF MIRROR POLISHED.
3. REFRIGERATOR. BY OWNER.
4. EYEWASH WITH DUST COVER. REFER TO PLUMBING DRAWINGS.

TOILET ACCESSORIES LEGEND

SEE TOILET ACCESSORIES LEGEND - 12/A7.3 FOR FURTHER DETAIL.

17	NAPKIN DISPOSAL.	33	FOLDING SHOWER SEAT.
20	ROBE / CLOTHES HOOK.	36A	SHOWER ROD (36").
21	CLOTHES HOOK.	48B	SHOWER ROD (48").
22A	GRAB BARS (36").	60A	SHOWER ROD (60").
22B	GRAB BARS (42").	77A	SHOWER CURTAIN & RINGS (36").
22C	GRAB BARS (48").	77B	SHOWER CURTAIN & RINGS (48").
22D	GRAB BARS (CORNER).	77C	SHOWER CURTAIN & RINGS (72").
24	MIRROR WITH CHANNEL FRAME.	54	TOILET TISSUE DISPENSER.
31	DIAPER CHANGING STATION (HORIZONTAL).	56	TOWEL SHELF / TOWEL BAR.

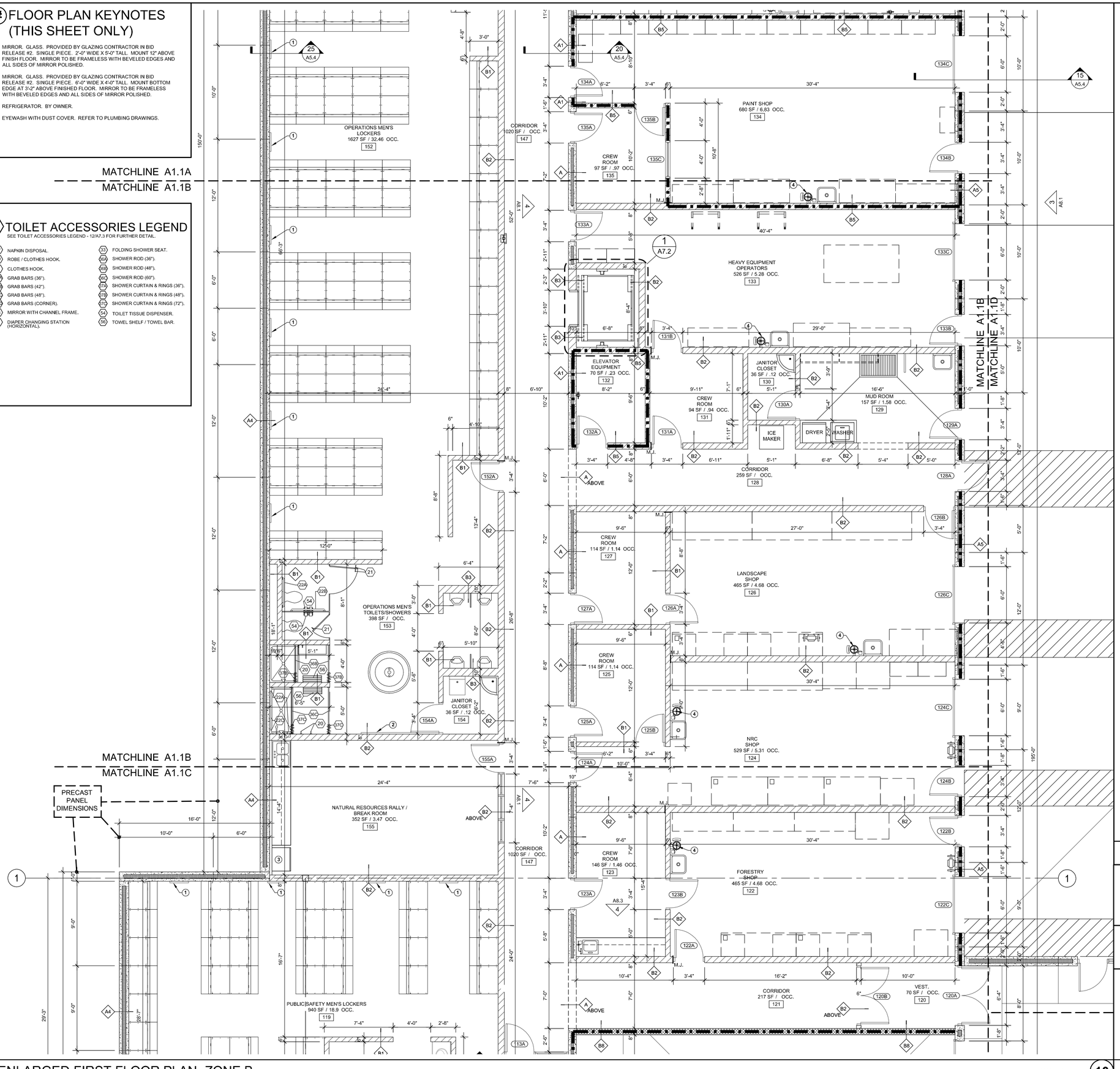

ENLARGED FIRST FLOOR PLAN- ZONE B

SCALE: 1/4" = 1'-0" 10

GRAPHIC	MARK	DESCRIPTION
10"	A	10" THICK PRECAST CONCRETE SANDWICH WALL PANEL. 3 1/2" CONCRETE OUTER WYTHE, 3" RIGID INSULATION, 3 1/2" CONCRETE INNER WYTHE. LOAD BEARING UNLESS NOTED OTHERWISE. MINIMUM R. VALUE = 15. HAND TROWEL INSIDE FACE OF PANEL SMOOTH. SEE WALL SECTIONS/STRUCTURAL DRAWINGS FOR BEARING ELEVATIONS, POCKETS, AND PANEL HEIGHTS.
10"	A1	SAME AS WALL TYPE 'A' ABOVE. PROVIDE 1-HOUR FIRE RATED ASSEMBLY. U.L. DESIGN NO. U-923.
12" NOM.	A2	5/8" TYPE "X" GYPSUM BOARD AND VAPOR BARRIER TO 6" ABOVE THE TOP SIDE OF FINISHED CEILING SYSTEM ON 1 5/8" METAL STUDS SPACED AT 16" O.C. WITH CONTINUOUS RUNNERS TOP AND BOTTOM. PROVIDE 1 1/2" RIGID POLYSTYRENE INSULATION (MINIMUM R. VALUE = 7.5) BETWEEN METAL STUDS. GYPSUM BOARD, VAPOR BARRIER, METAL STUDS, AND RIGID INSULATION ON ONE SIDE OF PRECAST CONCRETE WALL PANEL. SEE WALL TYPE 'A' ABOVE FOR CONCRETE WALL PANEL DESCRIPTION.
NOM.	A3	SAME AS WALL TYPE 'A2' ABOVE. PROVIDE 1-HOUR FIRE RATED ASSEMBLY. U.L. DESIGN NO. U-923.
NOM.	A4	12" THICK PRECAST CONCRETE SANDWICH WALL PANEL. 3 1/2" CONCRETE OUTER WYTHE, 5" RIGID INSULATION, 3 1/2" CONCRETE INNER WYTHE. LOAD BEARING UNLESS NOTED OTHERWISE. MINIMUM R. VALUE = 25. HAND TROWEL INSIDE FACE OF PANEL SMOOTH. SEE WALL SECTIONS/STRUCTURAL DRAWINGS FOR BEARING ELEVATIONS, POCKETS, AND PANEL HEIGHTS. THIS **ALTERNATE A-1** ACCEPTED.
NOM.	A5	SAME AS WALL TYPE 'A4' ABOVE. PROVIDE 1-HOUR FIRE RATED ASSEMBLY. U.L. DESIGN NO. U-923.

GRAPHIC	MARK	DESCRIPTION
4" NOM.	B	4" CONCRETE MASONRY UNIT. RUNNING BOND. SECURE TO STRUCTURE TOP AND BOTTOM. SEE STRUCTURAL DRAWINGS FOR REINFORCING/DETAILS. BULLNOSE EXPOSED EDGES.
6" NOM.	B1	6" CONCRETE MASONRY UNIT. RUNNING BOND. SECURE TO STRUCTURE TOP AND BOTTOM. SEE STRUCTURAL DRAWINGS FOR REINFORCING/DETAILS. BULLNOSE EXPOSED EDGES.
8" NOM.	B2	8" CONCRETE MASONRY UNIT. RUNNING BOND. SECURE TO STRUCTURE TOP AND BOTTOM. SEE STRUCTURAL DRAWINGS FOR REINFORCING/DETAILS. BULLNOSE EXPOSED EDGES.
10" NOM.	B3	10" CONCRETE MASONRY UNIT. RUNNING BOND. SECURE TO STRUCTURE TOP AND BOTTOM. SEE STRUCTURAL DRAWINGS FOR REINFORCING/DETAILS. BULLNOSE EXPOSED EDGES.
6" NOM.	B4	SAME AS WALL TYPE 'B1' ABOVE. 1-HOUR FIRE RATED ASSEMBLY. U.L. DESIGN NO. U-906.
8" NOM.	B5	SAME AS WALL TYPE 'B2' ABOVE. 1-HOUR FIRE RATED ASSEMBLY. U.L. DESIGN NO. U-905.
6" OR 8" NOM.	B6	6" OR 8" CONCRETE MASONRY UNIT. RUNNING BOND. HALF HEIGHT WALL TO 3'-4" A.F.F. TOP UNIT TO BE DOUBLE BULLNOSE SOLID UNIT. BULLNOSE EXPOSED CORNERS.
6", 8", 10" NOM.	B7	6", 8", 10" CONCRETE MASONRY UNIT. RUNNING BOND. SECURE TO STRUCTURE TOP AND BOTTOM. SEE STRUCTURAL DRAWINGS FOR REINFORCING/DETAILS. BULLNOSE EXPOSED EDGES. FILL CORES WITH FOAM INSULATION. BASIS OF DESIGN: CORE-FILL 500 BY TAILORED CHEMICAL PRODUCTS, INC. WWW.CORE-FILL500.COM PHONE: (800) 627-1687. EQUAL PRODUCTS WILL BE CONSIDERED.
6" OR 8" NOM.	B8	SAME AS WALL TYPE 'B7' ABOVE. 1-HOUR FIRE RATED ASSEMBLY. U.L. DESIGN NO. U-905.
6" NOM.	B9	SAME AS WALL TYPE 'B1' ABOVE. FILL CORES WITH SAND.
8" NOM.	B10	8" CONCRETE MASONRY UNIT. BURNISHED CMU. RUNNING BOND. SECURE TO STRUCTURE TOP AND BOTTOM. SEE STRUCTURAL DRAWINGS FOR REINFORCING/DETAILS. BULLNOSE EXPOSED EDGES.

GRAPHIC	MARK	DESCRIPTION
10" NOM.	C	6" CONCRETE MASONRY UNIT. RUNNING BOND. SECURE TO STRUCTURE TOP AND BOTTOM. 5/8" TYPE "X" GYPSUM BOARD TO 6" ABOVE THE TOP SIDE OF FINISHED CEILING SYSTEM ON 1 5/8" METAL STUDS SPACED AT 16" O.C. WITH CONTINUOUS RUNNERS TOP AND BOTTOM ON BOTH SIDES OF C.M.U. WALL CONSTRUCTION.
10" NOM.	C1	8" CONCRETE MASONRY UNIT. RUNNING BOND. SECURE TO STRUCTURE TOP AND BOTTOM. 5/8" TYPE "X" GYPSUM BOARD TO 6" ABOVE THE TOP SIDE OF FINISHED CEILING SYSTEM ON 1 5/8" METAL STUDS SPACED AT 16" O.C. WITH CONTINUOUS RUNNERS TOP AND BOTTOM ON ONE SIDE OF C.M.U. WALL CONSTRUCTION.
10" NOM.	C2	SAME AS WALL TYPE 'C1' ABOVE. 1-HOUR FIRE RATED ASSEMBLY. MASONRY CONSTRUCTION PER U.L. DESIGN NO. U-905.
12" NOM.	C3	10" CONCRETE MASONRY UNIT. RUNNING BOND. SECURE TO STRUCTURE TOP AND BOTTOM. 5/8" TYPE "X" GYPSUM BOARD OVER VAPOR BARRIER TO 6" ABOVE THE TOP SIDE OF FINISHED CEILING SYSTEM ON 1 5/8" METAL STUDS SPACED AT 16" O.C. WITH CONTINUOUS RUNNERS TOP AND BOTTOM ON ONE SIDE OF C.M.U. WALL CONSTRUCTION. PROVIDE 1 1/2" RIGID POLYSTYRENE INSULATION (MINIMUM R. VALUE = 7.5) BETWEEN METAL STUDS.

M.J. DESIGNATION M.J. (TYPICAL ALL SHEETS) INDICATES CONCRETE MASONRY UNIT VERTICAL MOVEMENT JOINT ABOVE DOOR OR WINDOW. HORIZONTAL REINFORCING TO BE DISCONTINUOUS AT EACH VERTICAL MOVEMENT JOINT. PROVIDE CONTINUOUS CAULK AND BACKER ROD ALONG BOTH SIDES OF JOINT. TYPICAL AT ALL MOVEMENT JOINTS.

NOTE: MASON TO PROVIDE BOND BEAMS OVER ALL OPENINGS 4'-0" WIDE OR LESS INCLUDING BUT NOT LIMITED TO DOORS, WINDOWS, AND LOUVERS. *NO EXCEPTIONS.* SEE SHEET S4.0, MISCELLANEOUS LINTEL SCHEDULE, FOR REINFORCING REQUIREMENTS AND DETAILS.

WALL TYPES NOT TO SCALE 4

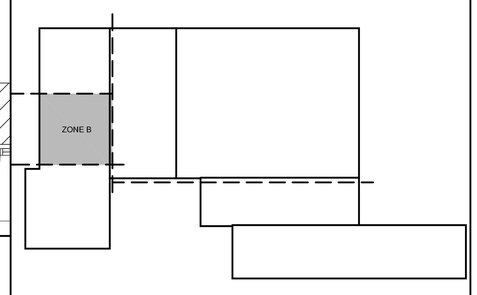

KEY PLAN NOT TO SCALE 5

COPYRIGHT © 2008
williams/associates/architects, ltd.

LAKE COUNTY FOREST PRESERVE DISTRICT OPERATIONS AND PUBLIC SAFETY FACILITY
19808 WEST GRAND AVENUE
LINDENHURST, IL 60046

wsa no	2006 - 035
date	01 OCTOBER 2008 - B.R. #2- PERMIT RVW.
drawn	JAO, DAM
checked	MSB, LMK
revised	

NORTH

WILLIAMS ARCHITECTS
ARCHITECTS PLANNERS
415 E. Evergreen Pl., Coral Stream, Illinois 60188
Phone 630-522-1212 | Fax 630-221-1220

ENLARGED FLOOR PLAN- ZONE B

A1.1B

BID RELEASE # 2

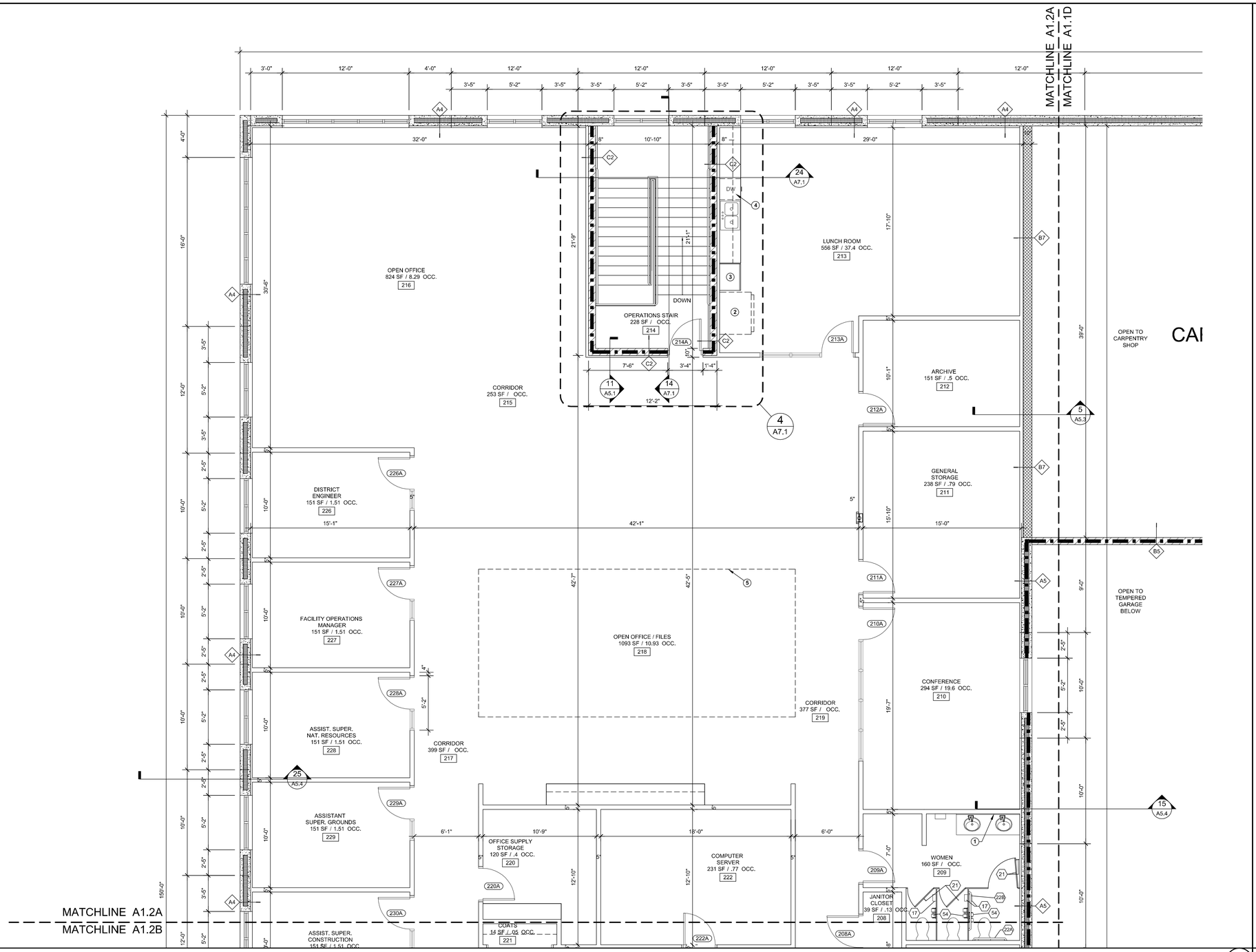

ENLARGED SECOND FLOOR PLAN- ZONE A

SCALE: 1/4" = 1'-0" (9)

WALL TYPES

NOT TO SCALE (4)

GRAPHIC	MARK	DESCRIPTION
10"	A	10" THICK PRECAST CONCRETE SANDWICH WALL PANEL. 3 1/2" CONCRETE OUTER WYTHE, 3" RIGID INSULATION, 3 1/2" CONCRETE INNER WYTHE. LOAD BEARING UNLESS NOTED OTHERWISE. MINIMUM R. VALUE = 15. HAND TROWEL INSIDE FACE OF PANEL SMOOTH. SEE WALL SECTIONS/STRUCTURAL DRAWINGS FOR BEARING ELEVATIONS, POCKETS, AND PANEL HEIGHTS.
10"	A1	SAME AS WALL TYPE 'A' ABOVE. PROVIDE 1-HOUR FIRE RATED ASSEMBLY. U.L. DESIGN NO. U-923.
12" NOM.	A2	5/8" TYPE "X" GYPSUM BOARD AND VAPOR BARRIER TO 6" ABOVE THE TOP SIDE OF FINISHED CEILING SYSTEM ON 1 5/8" METAL STUDS SPACED AT 16" O.C. WITH CONTINUOUS RUNNERS TOP AND BOTTOM. PROVIDE 1 1/2" RIGID POLYSTYRENE INSULATION (MINIMUM R. VALUE = 7.5) BETWEEN METAL STUDS, GYPSUM BOARD, VAPOR BARRIER, METAL STUDS, AND RIGID INSULATION ON ONE SIDE OF PRECAST CONCRETE WALL PANEL. SEE WALL TYPE 'A' ABOVE FOR CONCRETE WALL PANEL DESCRIPTION.
NOM.	A3	SAME AS WALL TYPE 'A2' ABOVE. PROVIDE 1-HOUR FIRE RATED ASSEMBLY. U.L. DESIGN NO. U-923.
NOM.	A4	12" THICK PRECAST CONCRETE SANDWICH WALL PANEL. 3 1/2" CONCRETE OUTER WYTHE, 5" RIGID INSULATION, 3 1/2" CONCRETE INNER WYTHE. LOAD BEARING UNLESS NOTED OTHERWISE. MINIMUM R. VALUE = 25. HAND TROWEL INSIDE FACE OF PANEL SMOOTH. SEE WALL SECTIONS/STRUCTURAL DRAWINGS FOR BEARING ELEVATIONS, POCKETS, AND PANEL HEIGHTS. THIS **ALTERNATE A-1** ACCEPTED.
NOM.	A5	SAME AS WALL TYPE 'A4' ABOVE. PROVIDE 1-HOUR FIRE RATED ASSEMBLY. U.L. DESIGN NO. U-923.

GRAPHIC	MARK	DESCRIPTION
4" NOM.	B	4" CONCRETE MASONRY UNIT. RUNNING BOND. SECURE TO STRUCTURE TOP AND BOTTOM. SEE STRUCTURAL DRAWINGS FOR REINFORCING/DETAILS. BULLNOSE EXPOSED EDGES.
6" NOM.	B1	6" CONCRETE MASONRY UNIT. RUNNING BOND. SECURE TO STRUCTURE TOP AND BOTTOM. SEE STRUCTURAL DRAWINGS FOR REINFORCING/DETAILS. BULLNOSE EXPOSED EDGES.
8" NOM.	B2	8" CONCRETE MASONRY UNIT. RUNNING BOND. SECURE TO STRUCTURE TOP AND BOTTOM. SEE STRUCTURAL DRAWINGS FOR REINFORCING/DETAILS. BULLNOSE EXPOSED EDGES.
10" NOM.	B3	10" CONCRETE MASONRY UNIT. RUNNING BOND. SECURE TO STRUCTURE TOP AND BOTTOM. SEE STRUCTURAL DRAWINGS FOR REINFORCING/DETAILS. BULLNOSE EXPOSED EDGES.
6" NOM.	B4	SAME AS WALL TYPE 'B1' ABOVE. 1-HOUR FIRE RATED ASSEMBLY. U.L. DESIGN NO. U-906.
8" NOM.	B5	SAME AS WALL TYPE 'B2' ABOVE. 1-HOUR FIRE RATED ASSEMBLY. U.L. DESIGN NO. U-905.
6" OR 8" NOM.	B6	6" OR 8" CONCRETE MASONRY UNIT. RUNNING BOND. HALF HEIGHT WALL TO 3'-4" A.F.F. TOP UNIT TO BE DOUBLE BULLNOSE SOLID UNIT. BULLNOSE EXPOSED CORNERS.
6", 8", 10" NOM.	B7	6", 8", 10" CONCRETE MASONRY UNIT. RUNNING BOND. SECURE TO STRUCTURE TOP AND BOTTOM. SEE STRUCTURAL DRAWINGS FOR REINFORCING/DETAILS. BULLNOSE EXPOSED EDGES. FILL CORES WITH FOAM INSULATION. BASIS OF DESIGN: CORE-FILL 500 BY TAILORED CHEMICAL PRODUCTS, INC. WWW.CORE-FILL500.COM PHONE: (800) 627-1687. EQUAL PRODUCTS WILL BE CONSIDERED.
6" OR 8" NOM.	B8	SAME AS WALL TYPE 'B7' ABOVE. 1-HOUR FIRE RATED ASSEMBLY. U.L. DESIGN NO. U-905.
6" NOM.	B9	SAME AS WALL TYPE 'B1' ABOVE. FILL CORES WITH SAND.
8" NOM.	B10	8" CONCRETE MASONRY UNIT. BURNISHED CMU. RUNNING BOND. SECURE TO STRUCTURE TOP AND BOTTOM. SEE STRUCTURAL DRAWINGS FOR REINFORCING/DETAILS. BULLNOSE EXPOSED EDGES.

GRAPHIC	MARK	DESCRIPTION
10" NOM.	C	6" CONCRETE MASONRY UNIT. RUNNING BOND. SECURE TO STRUCTURE TOP AND BOTTOM. 5/8" TYPE "X" GYPSUM BOARD TO 6" ABOVE THE TOP SIDE OF FINISHED CEILING SYSTEM ON 1 5/8" METAL STUDS SPACED AT 16" O.C. WITH CONTINUOUS RUNNERS TOP AND BOTTOM ON BOTH SIDES OF C.M.U. WALL CONSTRUCTION.
10" NOM.	C1	8" CONCRETE MASONRY UNIT. RUNNING BOND. SECURE TO STRUCTURE TOP AND BOTTOM. 5/8" TYPE "X" GYPSUM BOARD TO 6" ABOVE THE TOP SIDE OF FINISHED CEILING SYSTEM ON 1 5/8" METAL STUDS SPACED AT 16" O.C. WITH CONTINUOUS RUNNERS TOP AND BOTTOM ON ONE SIDE OF C.M.U. WALL CONSTRUCTION.
10" NOM.	C2	SAME AS WALL TYPE 'C1' ABOVE. 1-HOUR FIRE RATED ASSEMBLY. MASONRY CONSTRUCTION PER U.L. DESIGN NO. U-905.
12" NOM.	C3	10" CONCRETE MASONRY UNIT. RUNNING BOND. SECURE TO STRUCTURE TOP AND BOTTOM. 5/8" TYPE "X" GYPSUM BOARD OVER VAPOR BARRIER TO 6" ABOVE THE TOP SIDE OF FINISHED CEILING SYSTEM ON 1 5/8" METAL STUDS SPACED AT 16" O.C. WITH CONTINUOUS RUNNERS TOP AND BOTTOM ON ONE SIDE OF C.M.U. WALL CONSTRUCTION. PROVIDE 1 1/2" RIGID POLYSTYRENE INSULATION (MINIMUM R. VALUE = 7.5) BETWEEN METAL STUDS.

GRAPHIC	MARK	DESCRIPTION
5" NOM.	D	

TOILET ACCESSORIES LEGEND

SEE TOILET ACCESSORIES LEGEND - 12/A7.3 FOR FUTHER DETAIL.

- (17) NAPKIN DISPOSAL
- (21) CLOTHES HOOK
- (22A) GRAB BARS
- (22B) GRAB BARS
- (24) MIRROR WITH CHANNEL FRAME
- (31) DIAPER CHANGING STATION (HORIZONTAL)
- (54) TOILET TISSUE DISPENSER

FLOOR PLAN KEYNOTES (THIS SHEET ONLY)

1. MIRROR. GLASS. PROVIDED BY GLAZING CONTRACTOR IN BID RELEASE #2. SINGLE PIECE. 6'-0" WIDE X 4'-0" TALL. MOUNT ABOVE COUNTERTOP BACKSPLASH. MIRROR TO BE FRAMELESS WITH BEVELED EDGES AND ALL SIDES OF MIRROR POLISHED.
2. VENDING MACHINE. PROVIDED BY OWNER.
3. REFRIGERATOR. PROVIDED BY OWNER.
4. DISHWASHER. PROVIDED BY OWNER. INSTALLED BY CONTRACTOR.
5. DASHED LINES INDICATES SKYLIGHT ABOVE.

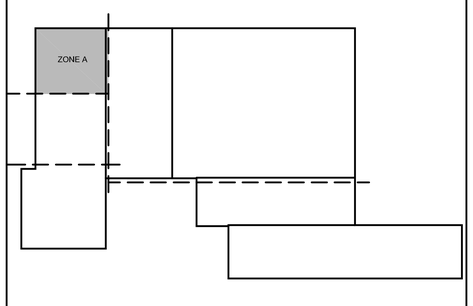

KEY PLAN

NOT TO SCALE (5)

COPYRIGHT © 2008
williams/associates/architects, ltd.

LAKE COUNTY FOREST PRESERVE DISTRICT
OPERATIONS AND PUBLIC SAFETY FACILITY
19808 WEST GRAND AVENUE
LINDENHURST, IL 60046

wa# no	2006 - 035
date	01 OCTOBER 2008 - B.R. #2- PERMIT RVW.
drawn	JAO, DAM
checked	MSB, LMK
rev/sed	

NORTH

WILLIAMS
ARCHITECTS
ARCHITECTS PLANNERS
406 E. Eucalyptus Ct., Lake Villa, Illinois 60046
Phone 630-721-1212 / Fax 630-721-1245

ENLARGED FLOOR PLAN- ZONE A

A1.2A

BID RELEASE # 2

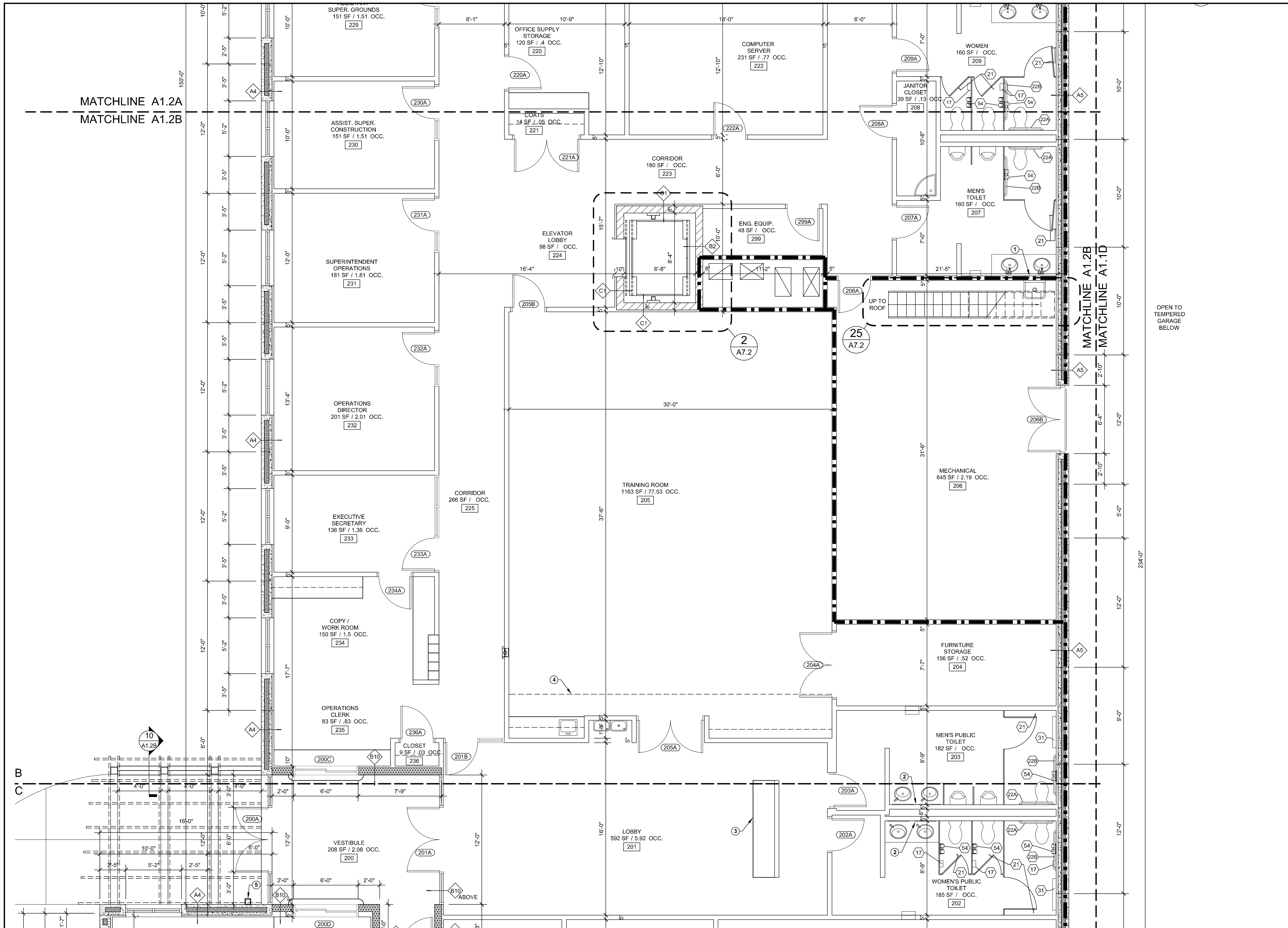

ENLARGED SECOND FLOOR PLAN- ZONE B

SCALE: 1/4" = 1'-0" (9)

WALL TYPES

NOT TO SCALE (4)

GRAPHIC	MARK	DESCRIPTION
10"	A	10" THICK PRECAST CONCRETE SANDWICH WALL PANEL. 3 1/2" CONCRETE OUTER WYTHE, 3" RIGID INSULATION, 3 1/2" CONCRETE INNER WYTHE. LOAD BEARING UNLESS NOTED OTHERWISE. MINIMUM R. VALUE = 15. HAND TROWEL INSIDE FACE OF PANEL SMOOTH. SEE WALL SECTIONS/STRUCTURAL DRAWINGS FOR BEARING ELEVATIONS, POCKETS, AND PANEL HEIGHTS.
10"	A1	SAME AS WALL TYPE 'A' ABOVE. PROVIDE 1-HOUR FIRE RATED ASSEMBLY. U.L. DESIGN NO. U-923.
12" NOM.	A2	5/8" TYPE "X" GYPSUM BOARD AND VAPOR BARRIER TO 6" ABOVE THE TOP SIDE OF FINISHED CEILING SYSTEM ON 1 5/8" METAL STUDS SPACED AT 16" O.C. WITH CONTINUOUS RUNNERS TOP AND BOTTOM. PROVIDE 1 1/2" RIGID POLYSTYRENE INSULATION (MINIMUM R. VALUE = 7.5) BETWEEN METAL STUDS. GYPSUM BOARD, VAPOR BARRIER, METAL STUDS, AND RIGID INSULATION ON ONE SIDE OF PRECAST CONCRETE WALL PANEL. SEE WALL TYPE 'A' ABOVE FOR CONCRETE WALL PANEL DESCRIPTION.
NOM.	A3	SAME AS WALL TYPE 'A2' ABOVE. PROVIDE 1-HOUR FIRE RATED ASSEMBLY. U.L. DESIGN NO. U-923.
NOM.	A4	12" THICK PRECAST CONCRETE SANDWICH WALL PANEL. 3 1/2" CONCRETE OUTER WYTHE, 5" RIGID INSULATION, 3 1/2" CONCRETE INNER WYTHE. LOAD BEARING UNLESS NOTED OTHERWISE. MINIMUM R. VALUE = 25. HAND TROWEL INSIDE FACE OF PANEL SMOOTH. SEE WALL SECTIONS/STRUCTURAL DRAWINGS FOR BEARING ELEVATIONS, POCKETS, AND PANEL HEIGHTS. THIS **ALTERNATE A-1** ACCEPTED.
NOM.	A5	SAME AS WALL TYPE 'A4' ABOVE. PROVIDE 1-HOUR FIRE RATED ASSEMBLY. U.L. DESIGN NO. U-923.

GRAPHIC	MARK	DESCRIPTION
4" NOM.	B	4" CONCRETE MASONRY UNIT. RUNNING BOND. SECURE TO STRUCTURE TOP AND BOTTOM. SEE STRUCTURAL DRAWINGS FOR REINFORCING/DETAILS. BULLNOSE EXPOSED EDGES.
6" NOM.	B1	6" CONCRETE MASONRY UNIT. RUNNING BOND. SECURE TO STRUCTURE TOP AND BOTTOM. SEE STRUCTURAL DRAWINGS FOR REINFORCING/DETAILS. BULLNOSE EXPOSED EDGES.
8" NOM.	B2	8" CONCRETE MASONRY UNIT. RUNNING BOND. SECURE TO STRUCTURE TOP AND BOTTOM. SEE STRUCTURAL DRAWINGS FOR REINFORCING/DETAILS. BULLNOSE EXPOSED EDGES.
10" NOM.	B3	10" CONCRETE MASONRY UNIT. RUNNING BOND. SECURE TO STRUCTURE TOP AND BOTTOM. SEE STRUCTURAL DRAWINGS FOR REINFORCING/DETAILS. BULLNOSE EXPOSED EDGES.
6" NOM.	B4	SAME AS WALL TYPE 'B1' ABOVE. 1-HOUR FIRE RATED ASSEMBLY. U.L. DESIGN NO. U-906.
8" NOM.	B5	SAME AS WALL TYPE 'B2' ABOVE. 1-HOUR FIRE RATED ASSEMBLY. U.L. DESIGN NO. U-905.
6" OR 8" NOM.	B6	6" OR 8" CONCRETE MASONRY UNIT. RUNNING BOND. HALF HEIGHT WALL TO 3'-4" A.F.F. TOP UNIT TO BE DOUBLE BULLNOSE SOLID UNIT. BULLNOSE EXPOSED CORNERS.
6", 8", 10" NOM.	B7	6", 8", 10" CONCRETE MASONRY UNIT. RUNNING BOND. SECURE TO STRUCTURE TOP AND BOTTOM. SEE STRUCTURAL DRAWINGS FOR REINFORCING/DETAILS. BULLNOSE EXPOSED EDGES. FILL CORES WITH FOAM INSULATION. BASIS OF DESIGN: CORE-FILL 500 BY TAILORED CHEMICAL PRODUCTS, INC. WWW.CORE-FILL500.COM PHONE: (800) 627-1687. EQUAL PRODUCTS WILL BE CONSIDERED.
6" OR 8" NOM.	B8	SAME AS WALL TYPE 'B7' ABOVE. 1-HOUR FIRE RATED ASSEMBLY. U.L. DESIGN NO. U-905.
6" NOM.	B9	SAME AS WALL TYPE 'B1' ABOVE. FILL CORES WITH SAND.
8" NOM.	B10	8" CONCRETE MASONRY UNIT. BURNISHED CMU. RUNNING BOND. SECURE TO STRUCTURE TOP AND BOTTOM. SEE STRUCTURAL DRAWINGS FOR REINFORCING/DETAILS. BULLNOSE EXPOSED EDGES.

GRAPHIC	MARK	DESCRIPTION
10" NOM.	C	6" CONCRETE MASONRY UNIT. RUNNING BOND. SECURE TO STRUCTURE TOP AND BOTTOM. 5/8" TYPE "X" GYPSUM BOARD TO 6" ABOVE THE TOP SIDE OF FINISHED CEILING SYSTEM ON 1 5/8" METAL STUDS SPACED AT 16" O.C. WITH CONTINUOUS RUNNERS TOP AND BOTTOM ON BOTH SIDES OF C.M.U. WALL CONSTRUCTION.
10" NOM.	C1	8" CONCRETE MASONRY UNIT. RUNNING BOND. SECURE TO STRUCTURE TOP AND BOTTOM. 5/8" TYPE "X" GYPSUM BOARD TO 6" ABOVE THE TOP SIDE OF FINISHED CEILING SYSTEM ON 1 5/8" METAL STUDS SPACED AT 16" O.C. WITH CONTINUOUS RUNNERS TOP AND BOTTOM ON ONE SIDE OF C.M.U. WALL CONSTRUCTION.
10" NOM.	C2	SAME AS WALL TYPE 'C1' ABOVE. 1-HOUR FIRE RATED ASSEMBLY. MASONRY CONSTRUCTION PER U.L. DESIGN NO. U-905.
12" NOM.	C3	10" CONCRETE MASONRY UNIT. RUNNING BOND. SECURE TO STRUCTURE TOP AND BOTTOM. 5/8" TYPE "X" GYPSUM BOARD OVER VAPOR BARRIER TO 6" ABOVE THE TOP SIDE OF FINISHED CEILING SYSTEM ON 1 5/8" METAL STUDS SPACED AT 16" O.C. WITH CONTINUOUS RUNNERS TOP AND BOTTOM ON ONE SIDE OF C.M.U. WALL CONSTRUCTION. PROVIDE 1 1/2" RIGID POLYSTYRENE INSULATION (MINIMUM R. VALUE = 7.5) BETWEEN METAL STUDS.

GRAPHIC	MARK	DESCRIPTION
5" NOM.	D	

(#) FLOOR PLAN KEYNOTES (THIS SHEET ONLY)

1. MIRROR. GLASS. PROVIDED BY GLAZING CONTRACTOR IN BID RELEASE #2. SINGLE PIECE. 6'-0" WIDE X 4'-0" TALL. MOUNT ABOVE COUNTERTOP BACKSPLASH. MIRROR TO BE FRAMELESS WITH BEVELED EDGES AND ALL SIDES OF MIRROR POLISHED.
2. MIRROR. GLASS. PROVIDED BY GLAZING CONTRACTOR IN BID RELEASE #2. SINGLE PIECE. 5'-0" WIDE X 4'-0" TALL. MOUNT ABOVE COUNTERTOP BACKSPLASH. MIRROR TO BE FRAMELESS WITH BEVELED EDGES AND ALL SIDES OF MIRROR POLISHED.
3. DISPLAY CASE. PART OF BID RELEASE #3.
4. DASHED LINE INDICATES SOFFIT ABOVE. SEE REFELECTED CEILING PLANS.
5. KNOX BOX. FURNISHED BY GENERAL TRADE CONTRACTOR IN BID RELEASE #3. CONFIRM FINAL LOCATION WITH FIRE DEPARTMENT. CONTACT LAKE VILLA FIRE PROTECTION DISTRICT TO OBTAIN.

(#) TOILET ACCESSORIES LEGEND

SEE TOILET ACCESSORIES LEGEND - 12/A7.3 FOR FURTHER DETAIL.

17	NAPKIN DISPOSAL.	33	FOLDING SHOWER SEAT.
20	ROBE / CLOTHES HOOK.	36A	SHOWER ROD (36").
21	CLOTHES HOOK.	36B	SHOWER ROD (48").
22A	GRAB BARS (36").	36C	SHOWER ROD (60").
22B	GRAB BARS (42").	37A	SHOWER CURTAIN & RINGS (36").
22C	GRAB BARS (48").	37B	SHOWER CURTAIN & RINGS (48").
22D	GRAB BARS (CORNER).	37C	SHOWER CURTAIN & RINGS (72").
24	MIRROR WITH CHANNEL FRAME.	54	TOILET TISSUE DISPENSER.
31	DIAPER CHANGING STATION (HORIZONTAL).	56	TOWEL SHELF / TOWEL BAR.

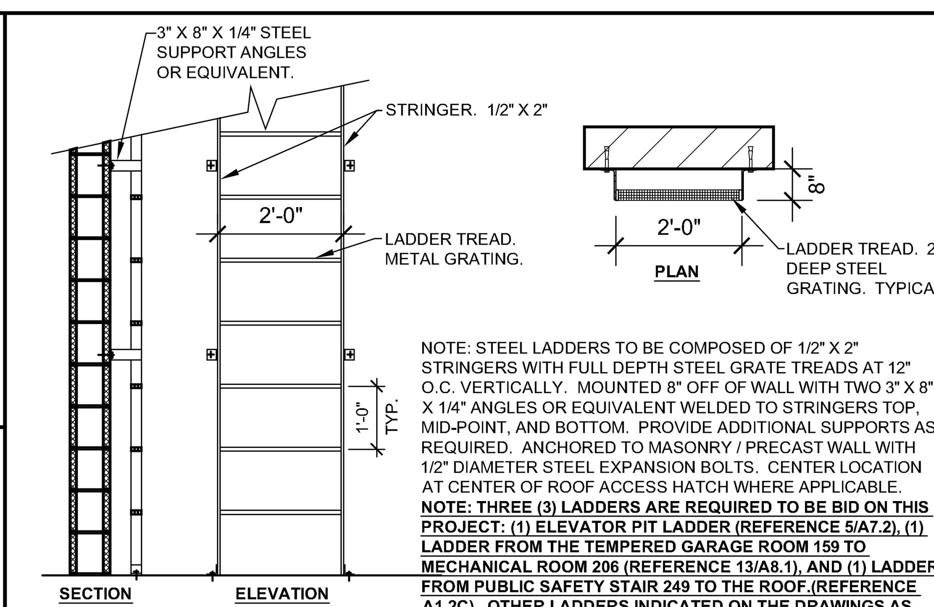

STEEL LADDER: 1/2" X 2" STEEL LADDER WITH 3/4" DIAMETER RUNGS AT 12"OC. MOUNTED 7" OFF OF WALL WITH TWO 3" X 4" X 1/4 ANGLES WELDED TO STRINGERS TOP, MID-POINT AND BOTTOM. ANCHORED TO MASONRY / GYPSUM BOARD WITH 1/2" DIAMETER STEEL EXPANSION BOLTS. PAINTED. CENTER LOCATION AT CENTER OF ROOF ACCESS HATCH WHERE APPLICABLE.

NOTE: STEEL LADDERS TO BE COMPOSED OF 1/2" X 2" STRINGERS WITH FULL DEPTH STEEL GRATE TREADS AT 12" O.C. VERTICALLY. MOUNTED 8" OFF OF WALL WITH TWO 3" X 8" X 1/4" ANGLES OR EQUIVALENT WELDED TO STRINGERS TOP, MID-POINT, AND BOTTOM. PROVIDE ADDITIONAL SUPPORTS AS REQUIRED. ANCHORED TO MASONRY / PRECAST WALL WITH 1/2" DIAMETER STEEL EXPANSION BOLTS. CENTER LOCATION AT CENTER OF ROOF ACCESS HATCH WHERE APPLICABLE.
NOTE: THREE (3) LADDERS ARE REQUIRED TO BE BID ON THIS PROJECT: (1) ELEVATOR PIT LADDER (REFERENCE 5/A7.2), (1) LADDER FROM THE TEMPERED GARAGE ROOM 159 TO MECHANICAL ROOM 206 (REFERENCE 13/A8.1), AND (1) LADDER FROM PUBLIC SAFETY STAIR 249 TO THE ROOF.(REFERENCE A1.2C). OTHER LADDERS INDICATED ON THE DRAWINGS AS 'SHIP'S LADDER. STEEL. FUTURE BID RELEASE.' ARE PREMANUFACTURED LADDERS FROM A SPECIFIC MANUFACTURER TO BE BID IN A FUTURE BID RELEASE.

DETAILS/

SCALE: 1/2" = 1'-0" (15)

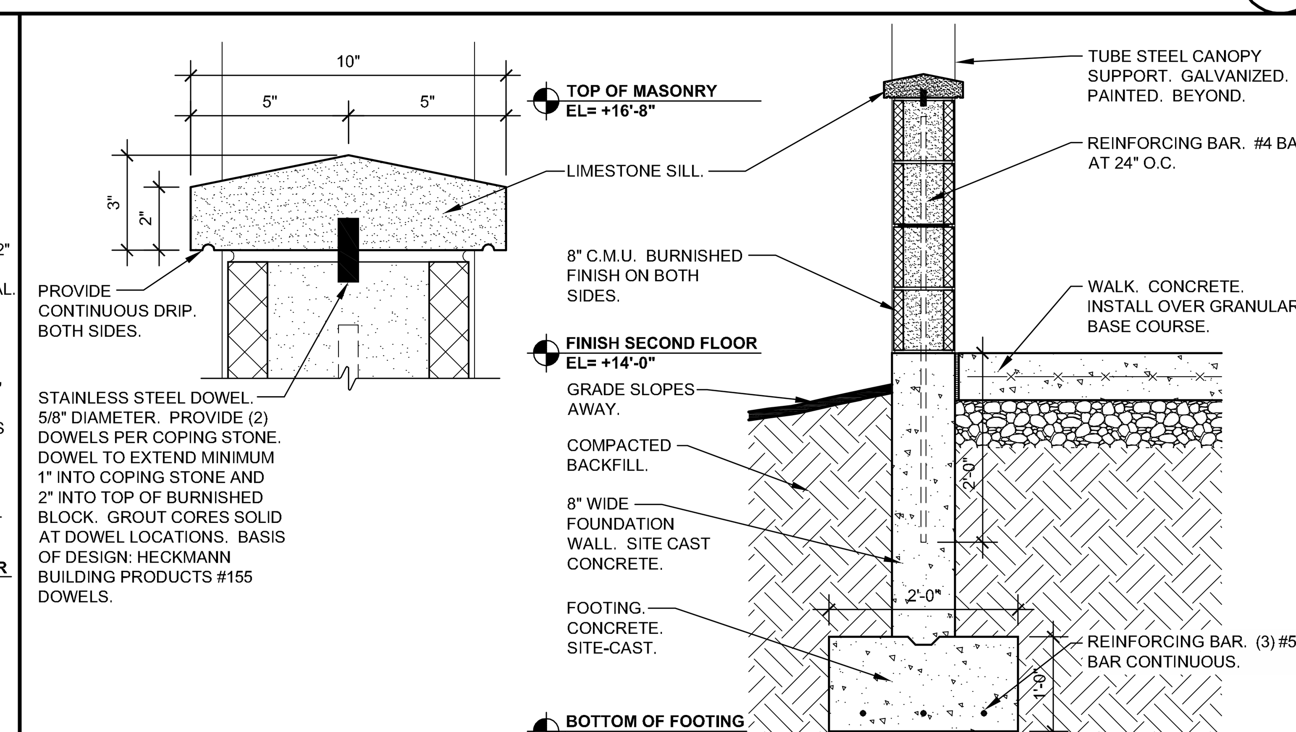

SECTION/ MAIN PUBLIC ENTRANCE: SCREEN WALL

SCALE: 3/4" = 1'-0" (10)

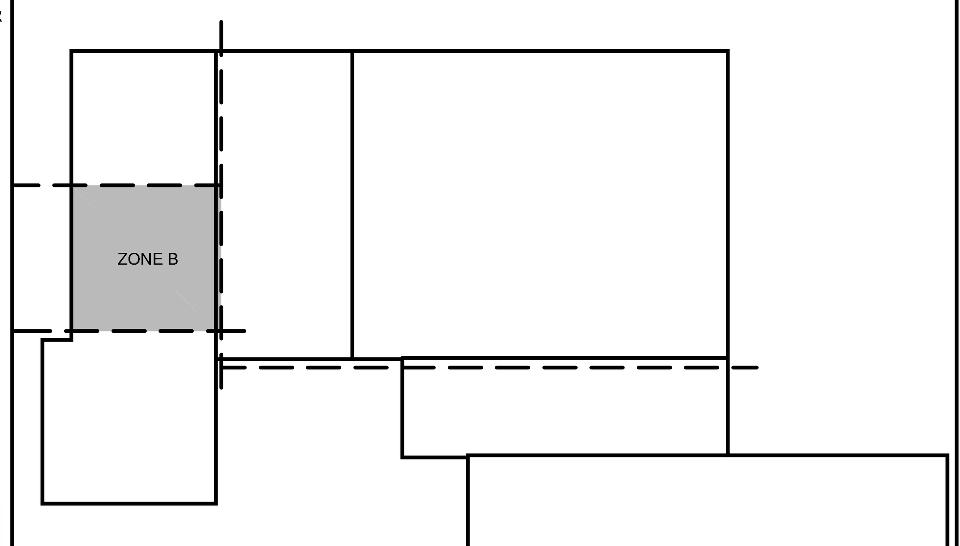

KEY PLAN

NOT TO SCALE (5)

COPYRIGHT © 2008 williams/associates/architects, ltd.

LAKE COUNTY FOREST PRESERVE DISTRICT OPERATIONS AND PUBLIC SAFETY FACILITY
19808 WEST GRAND AVENUE
LINDENHURST, IL 60046

waa no 2006 - 035
date 01 OCTOBER 2008 - B.R. #2- PERMIT RVW.
drawn JAO, DAM
checked MSB, LMK
revised

NORTH

WILLIAMS ARCHITECTS
ARCHITECTS PLANNERS
450 E. Gundersen Dr., Carol Stream, Illinois 60188
Phone 630-221-1212 / Fax 630-221-1220

ENLARGED FLOOR PLAN- ZONE B

A1.2B

BID RELEASE # 2

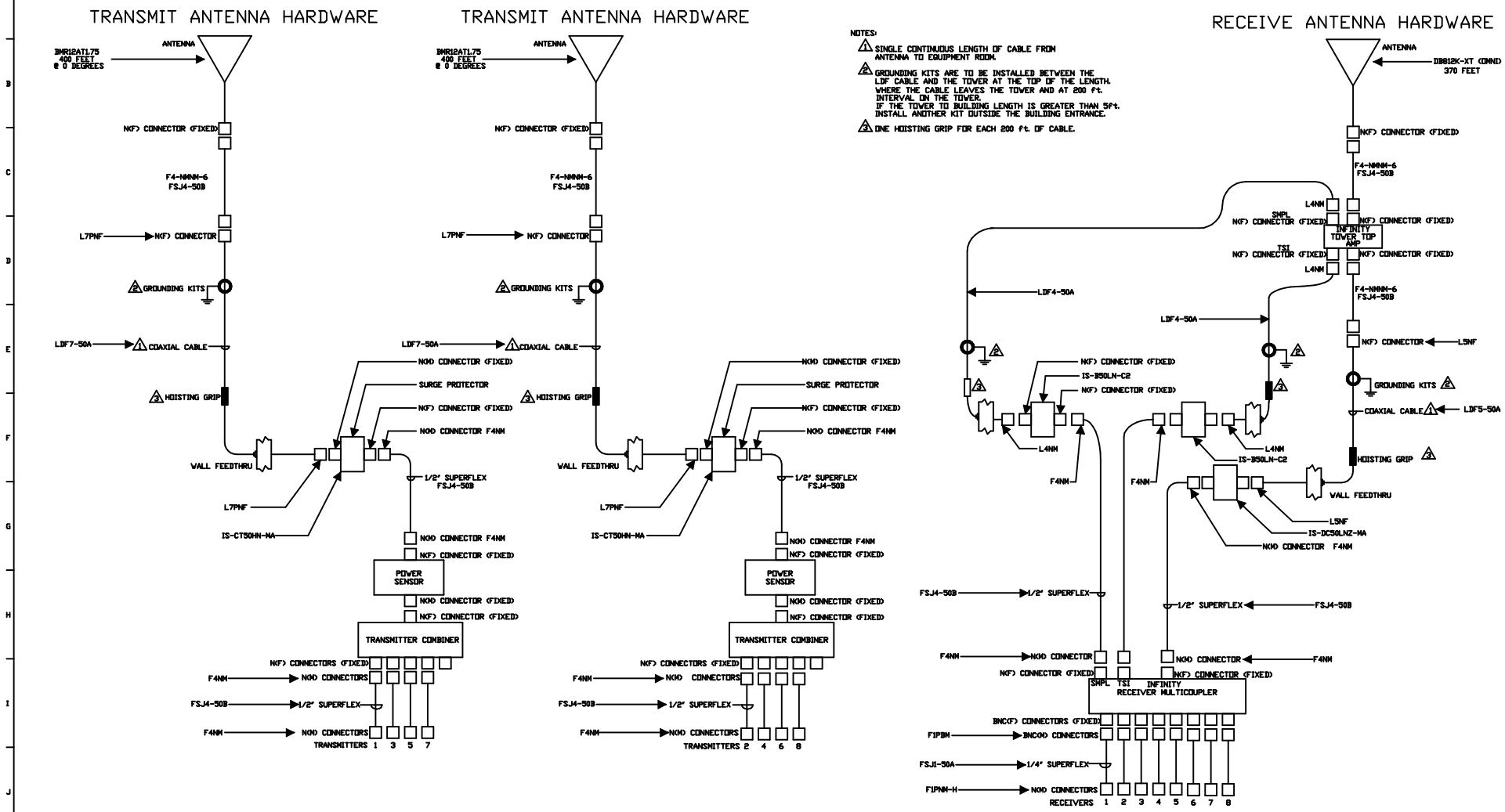
TRANSMIT ANTENNA HARDWARE
TRANSMIT ANTENNA HARDWARE
RECEIVE ANTENNA HARDWARE
NOTES:
1 SINGLE CONTINUOUS LENGTH OF CABLE FROM ANTENNA TO EQUIPMENT ROOM.
2 GROUNDING KITS ARE TO BE INSTALLED BETWEEN THE LDF CABLE AND THE TOWER AT THE TOP OF THE LENGTH. WHERE THE CABLE LEAVES THE TOWER AND AT 200 ft. INTERVAL ON THE TOWER. IF THE TOWER TO BUILDING LENGTH IS GREATER THAN 5ft. INSTALL ANOTHER KIT OUTSIDE THE BUILDING ENTRANCE.
3 ONE HOISTING GRIP FOR EACH 200 ft. OF CABLE.
ANTENNA
BMR12ATL75 400 FEET @ 0 DEGREES
DB812K-XT (OMNI) 370 FEET
NKF) CONNECTOR (FIXED)
F4-NMNM-6 FSJ4-50B
L7PNF
NKF) CONNECTOR
GROUNDING KITS
LDF7-50A
COAXIAL CABLE
HOISTING GRIP
NKM) CONNECTOR (FIXED)
SURGE PROTECTOR
NKF) CONNECTOR (FIXED)
NKM) CONNECTOR F4NM
WALL FEEDTHRU
1/2" SUPERFLEX FSJ4-50B
IS-CT50HN-MA
NKM) CONNECTOR F4NM
NKF) CONNECTOR (FIXED)
POWER SENSOR
NKM) CONNECTOR (FIXED)
NKF) CONNECTOR (FIXED)
TRANSMITTER COMBINER
NKF) CONNECTORS (FIXED)
F4NM
NKM) CONNECTORS
FSJ4-50B
1/2" SUPERFLEX
NKM) CONNECTORS
TRANSMITTERS 1 3 5 7
TRANSMITTERS 2 4 6 8
L4NM
SMPL
TSI
INFINITY TOWER TOP AMP
LDF4-50A
L5NF
LDF5-50A
IS-B50LN-C2
IS-DC50LNZ-MA
INFINITY RECEIVER MULTICOUPLER
BNC(F) CONNECTORS (FIXED)
FIPBM
BNC(M) CONNECTORS
FSJ1-50A
1/4" SUPERFLEX
FIPNM-H
RECEIVERS 1 2 3 4 5 6 7 8
T.VAUGHTER
R.BOLSTAD
2001/01/11
PA1
FMF :LAKE COUNTY
FCFD :B0219
CAD :F0101032
SCALE:
PRELIMINARY
LAKE ZURICH ANTENNA ASSEMBLY
AP01-SY101197V4
1 (1)
L50

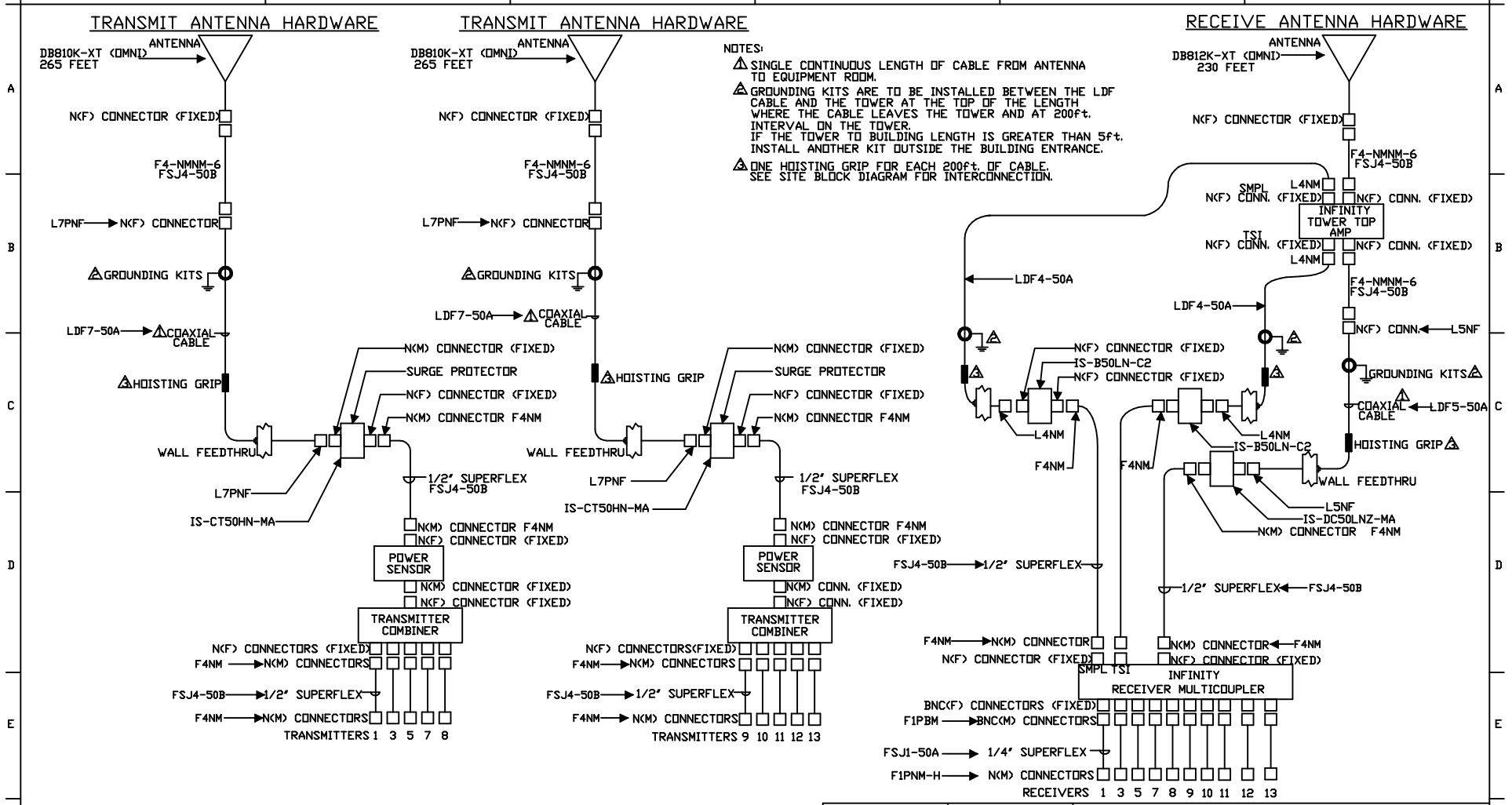

CommNet Ericsson CRITICAL RADIO SYSTEMS		Prepared (also subject responsible if other) T.VAUGHTER	
References FMF :LAKE COUNTY FCFO :80219 CAD :F0101008 SCALE: PRELIMINARY	Doc respons/Approved R.BOLSTAD	Date 2001/01/03	Rev PA1
	Product name LIBERTYVILLE ANTENNNA ASSEMBLY		
	Document No AP01-SY101197V2	Sheet 1 (1)	

L59

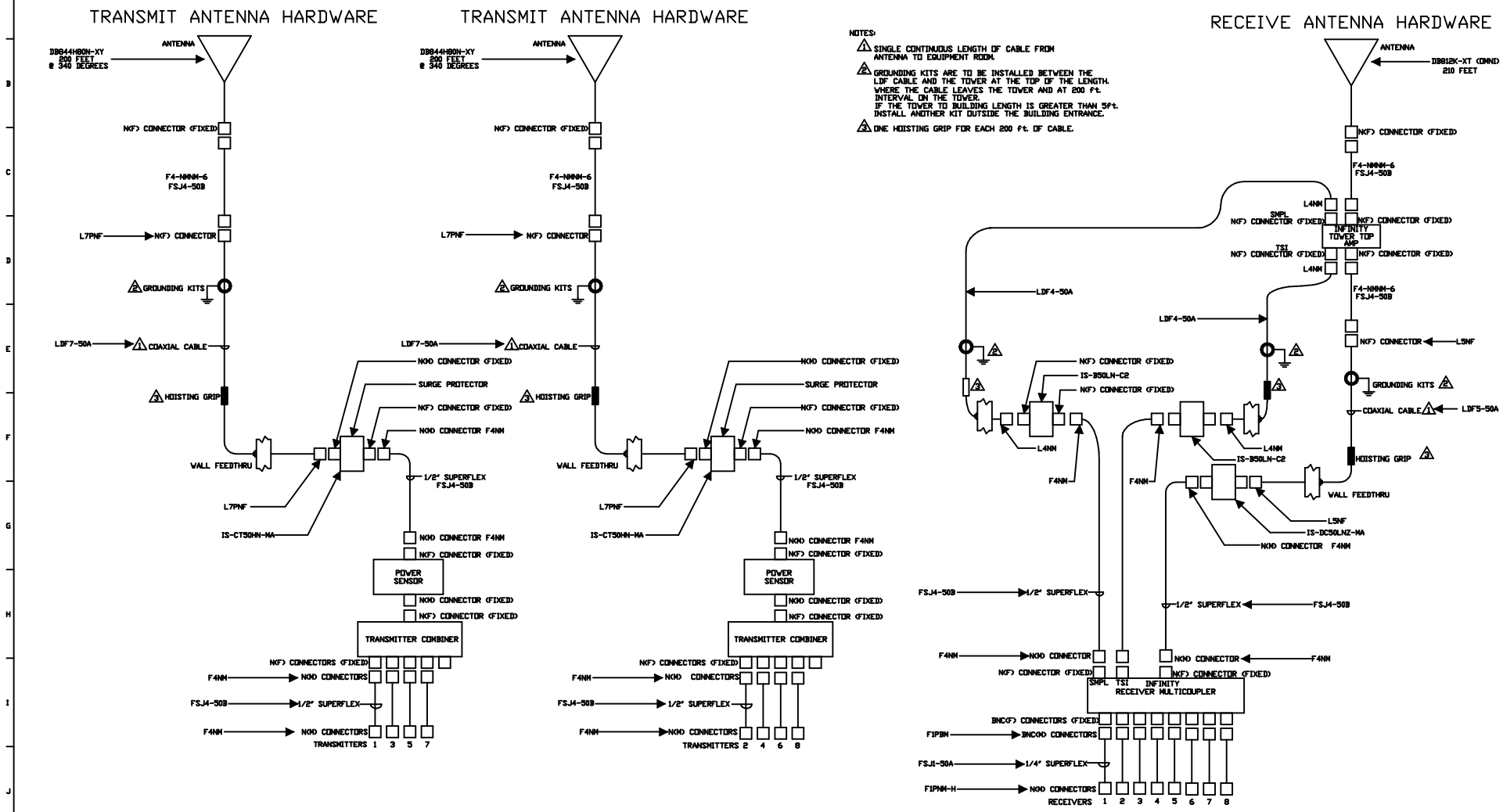
TRANSMIT ANTENNA HARDWARE
TRANSMIT ANTENNA HARDWARE
RECEIVE ANTENNA HARDWARE
NOTES:
1 SINGLE CONTINUOUS LENGTH OF CABLE FROM ANTENNA TO EQUIPMENT ROOM.
2 GROUNDING KITS ARE TO BE INSTALLED BETWEEN THE LDF CABLE AND THE TOWER AT THE TOP OF THE LENGTH. WHERE THE CABLE LEAVES THE TOWER AND AT 200 ft. INTERVAL ON THE TOWER. IF THE TOWER TO BUILDING LENGTH IS GREATER THAN 5ft. INSTALL ANOTHER KIT OUTSIDE THE BUILDING ENTRANCE.
3 ONE HOISTING GRIP FOR EACH 200 ft. OF CABLE.
ANTENNA
DB844H80N-XY 200 FEET @ 340 DEGREES
NKF) CONNECTOR (FIXED)
F4-NMNM-6 FSJ4-50B
L7PNF
NKF) CONNECTOR
GROUNDING KITS
LDF7-50A
COAXIAL CABLE
HOISTING GRIP
NKM) CONNECTOR (FIXED)
SURGE PROTECTOR
NKF) CONNECTOR (FIXED)
NKM) CONNECTOR F4NM
WALL FEEDTHRU
1/2" SUPERFLEX FSJ4-50B
IS-CT50HN-MA
NKM) CONNECTOR F4NM
NKF) CONNECTOR (FIXED)
POWER SENSOR
NKM) CONNECTOR (FIXED)
NKF) CONNECTOR (FIXED)
TRANSMITTER COMBINER
NKF) CONNECTORS (FIXED)
F4NM
NKM) CONNECTORS
FSJ4-50B
1/2" SUPERFLEX
NKM) CONNECTORS
TRANSMITTERS 1 3 5 7
TRANSMITTERS 2 4 6 8
DB812K-XT (OMNI) 210 FEET
L4NM
SMPL
TSI
INFINITY TOWER TOP AMP
LDF4-50A
L5NF
LDF5-50A
IS-B50LN-C2
IS-DC50LNZ-MA
NKM) CONNECTOR F4NM
1/2" SUPERFLEX
FSJ4-50B
NKM) CONNECTOR
NKF) CONNECTOR (FIXED)
INFINITY RECEIVER MULTICOUPLER
BNC(F) CONNECTORS (FIXED)
F1PBM
BNC(M) CONNECTORS
FSJ1-50A
1/4" SUPERFLEX
F1PNM-H
NKM) CONNECTORS
RECEIVERS 1 2 3 4 5 6 7 8
T.VAUGHTER
R.BOLSTAD
2001/01/11
PA1
FMF :LAKE COUNTY
FCC :80219
CAD :F0101038
SCALE:
PRELIMINARY
LAKE VILLA ANTENNA ASSEMBLY
AP01-SY101197V5
1 (1)
L50

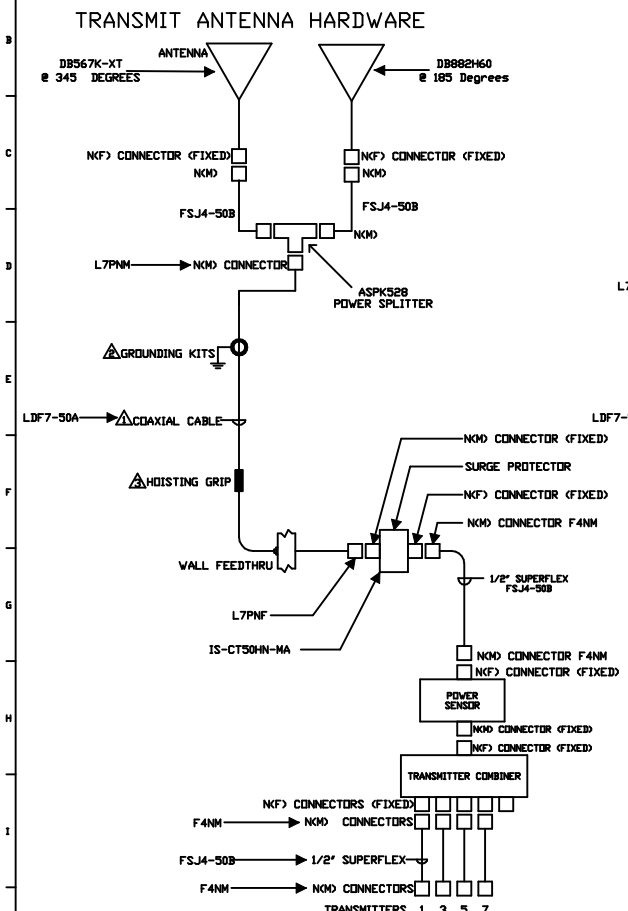

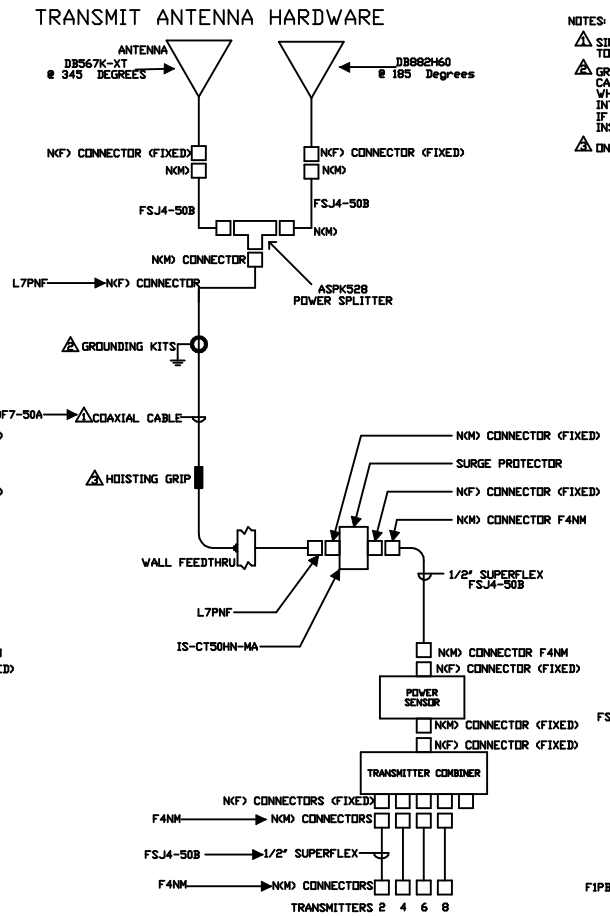

NOTES:

1. SINGLE CONTINUOUS LENGTH OF CABLE FROM ANTENNA TO EQUIPMENT ROOM.
2. GROUNDING KITS ARE TO BE INSTALLED BETWEEN THE LDF CABLE AND THE TOWER AT THE TOP OF THE LENGTH WHERE THE CABLE LEAVES THE TOWER AND AT 200 ft. INTERVAL ON THE TOWER.
   IF THE TOWER TO BUILDING LENGTH IS GREATER THAN 5ft. INSTALL ANOTHER KIT OUTSIDE THE BUILDING ENTRANCE.
3. ONE HOISTING GRIP FOR EACH 200 ft. OF CABLE.

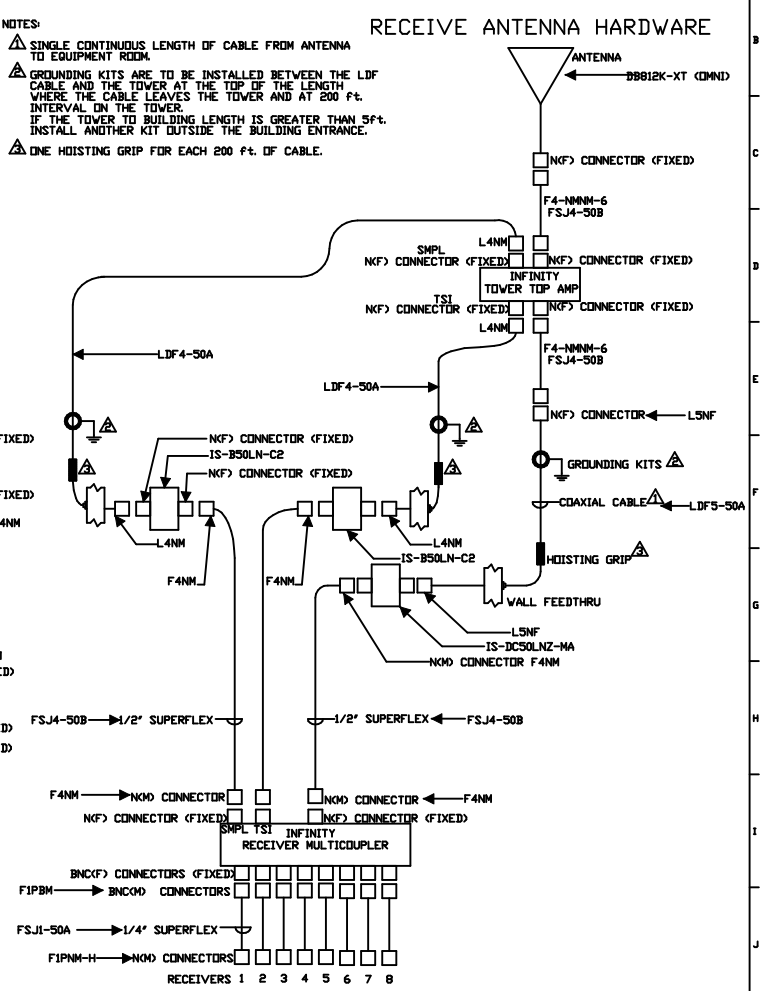

Reference FMF :LAKE COUNTY FCFD :B0219 CAD :F0101044 SCALE: PRELIMINARY	Prepared (also subject responsible if other) T.VAUGHTER Date prepared/Approved R.BOLSTAD	Date 2001/01/11	Rev PA1
	Product name WAUKEGAN ANTENNA ASSEMBLY		
	Document No AP01-SY101197V6	Sheet 1 (1)	

Transmit Antenna Hardware

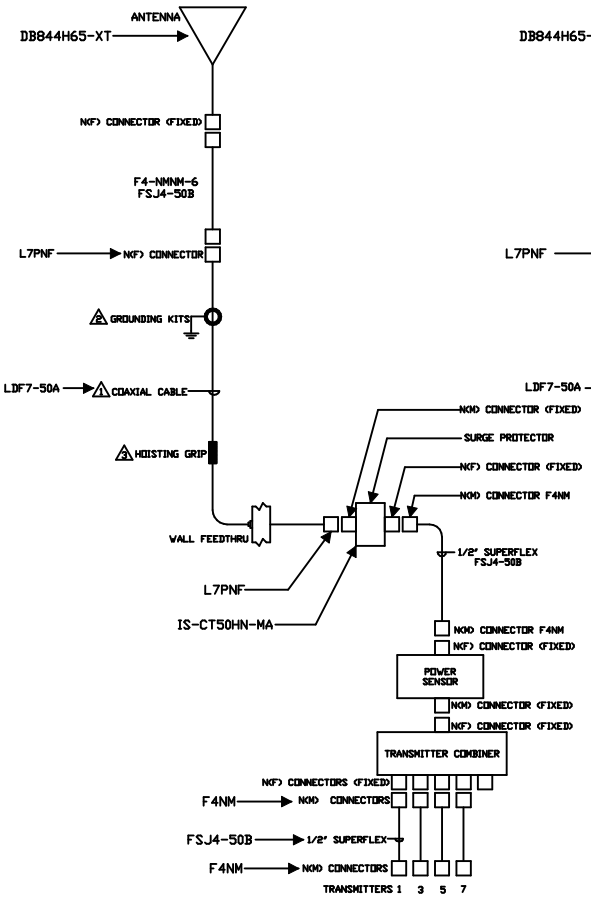

Transmit Antenna Hardware

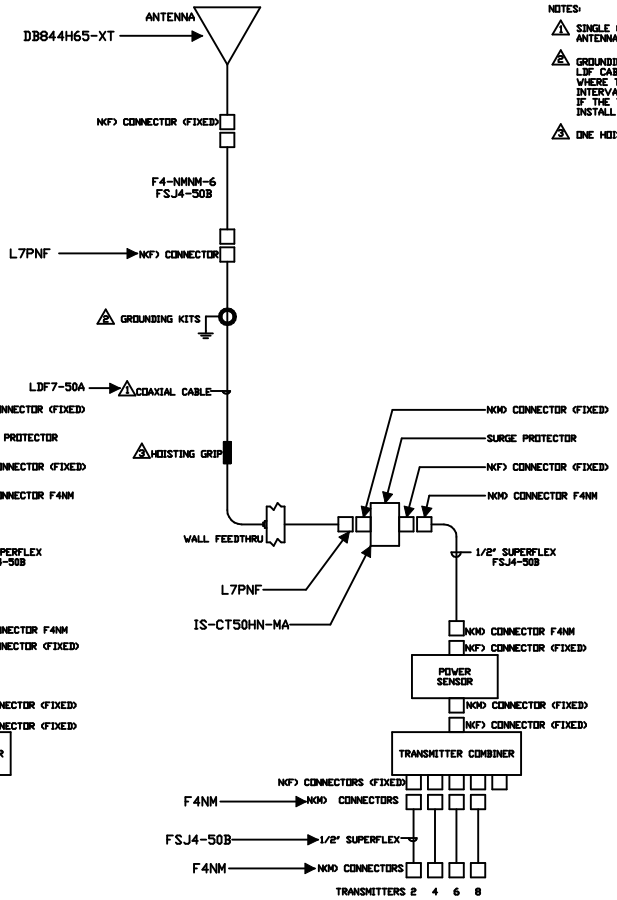

NOTES:

1. SINGLE CONTINUOUS LENGTH OF CABLE FROM ANTENNA TO EQUIPMENT ROOM.
2. GROUNDING KITS ARE TO BE INSTALLED BETWEEN THE LDF CABLE AND THE TOWER AT THE TOP OF THE LENGTH, WHERE THE CABLE LEAVES THE TOWER AND AT 200ft. INTERVAL ON THE TOWER. IF THE TOWER TO BUILDING LENGTH IS GREATER THAN 5ft. INSTALL ANOTHER KIT OUTSIDE THE BUILDING ENTRANCE.
3. ONE HOISTING GRIP FOR EACH 200 ft. OF CABLE.

RECEIVE ANTENNA HARDWARE

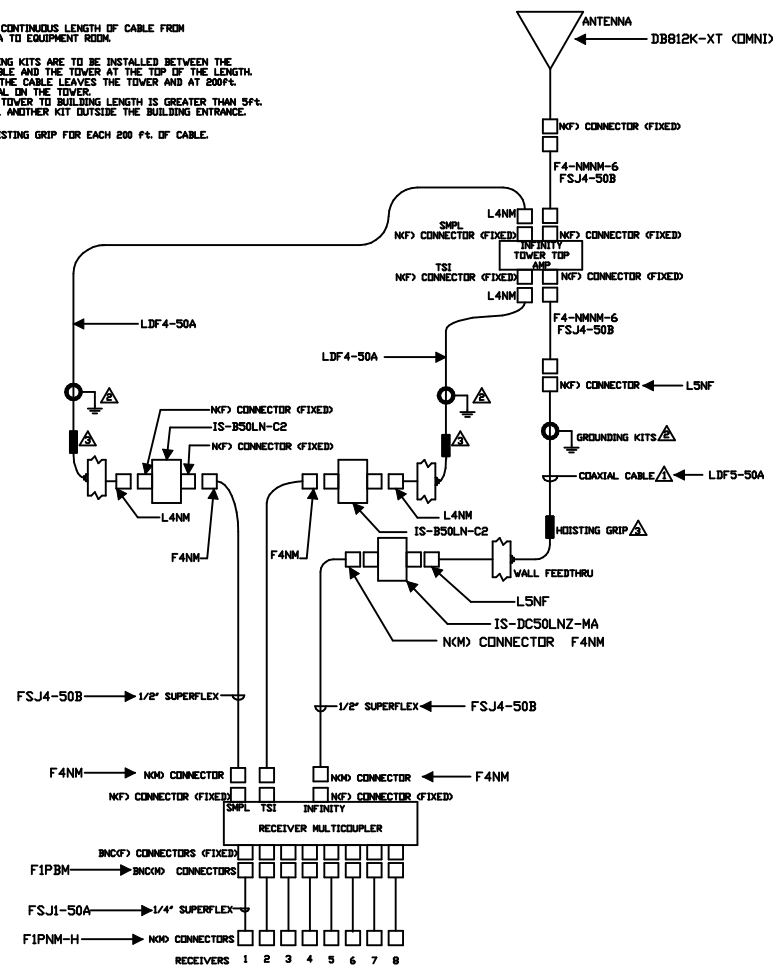

Reference FMF :LAKE COUNTY FCFD :80219 CAD :F0101080 SCALE: PRELIMINARY	Prepared (plus subject responsible if other) T.VAUGHTER Date prepared/Approved R.BOLSTAD	Date 2001/01/24	Rev PA1
	Product name HIGHWOOD ANTENNA ASSEMBLY		
	Document No AP00-SY101197V7	Sheet 1 (1)	

L50

Transmit Antenna Hardware

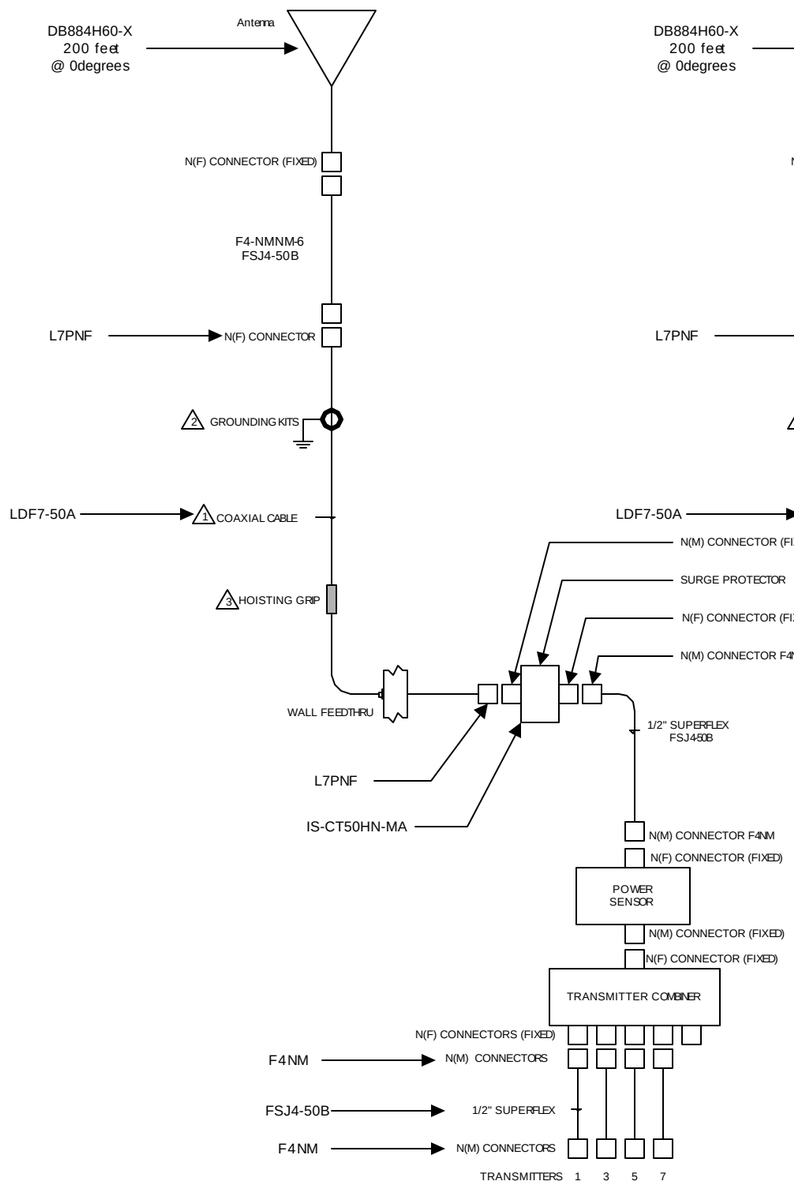

Transmit Antenna Hardware

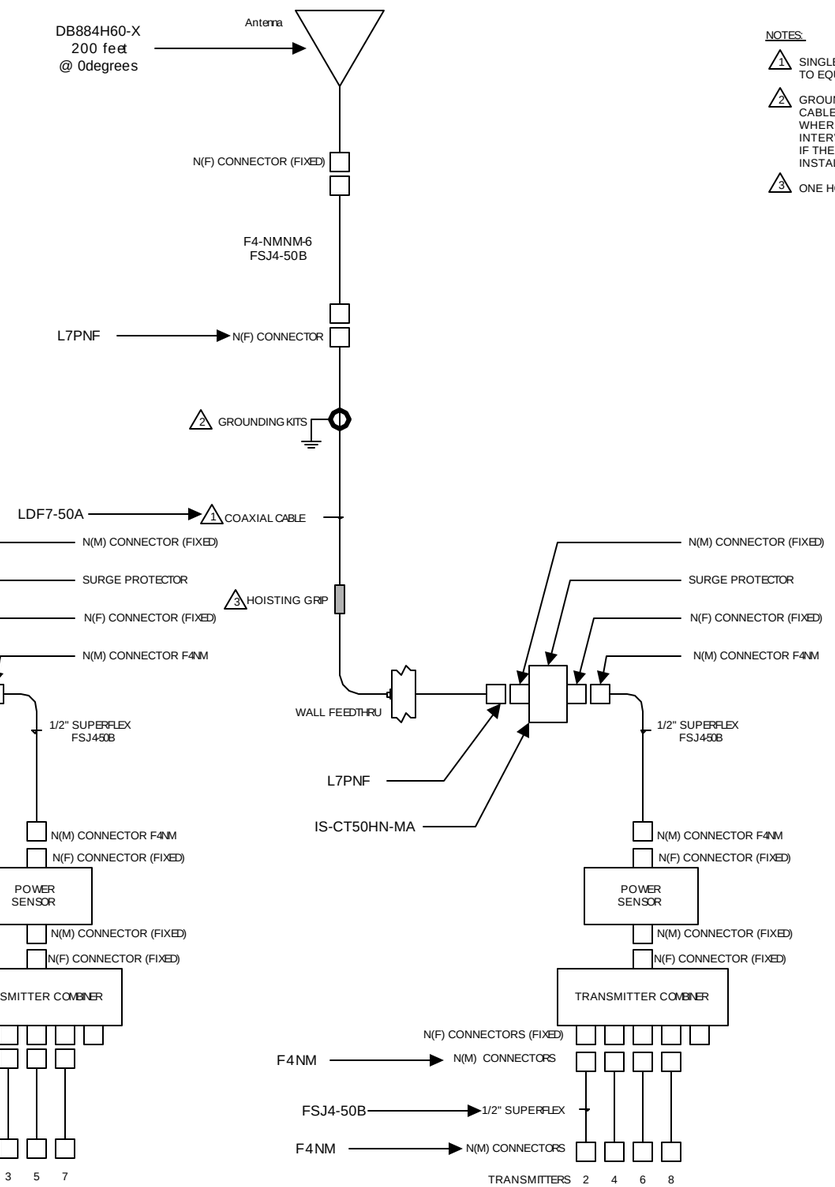

NOTES:

1. SINGLE CONTINUOUS LENGTH OF CABLE FROM ANTENNA TO EQUIPMENT ROOM
2. GROUNDING KITS ARE TO BE INSTALLED BETWEEN THE LDF CABLE AND THE TOWER AT THE TOP OF THE LENGTH WHERE THE CABLE LEAVES THE TOWER AND AT 200 ft. INTERVAL ON THE TOWER.
   IF THE TOWER TO BUILDING LENGTH IS GREATER THAN 50 ft. INSTALL ANOTHER KIT OUTSIDE THE BUILDING ENTRANCE.
3. ONE HOISTING GRIP FOR EACH 200 ft. OF CABLE.

RECEIVE ANTENNA HARDWARE

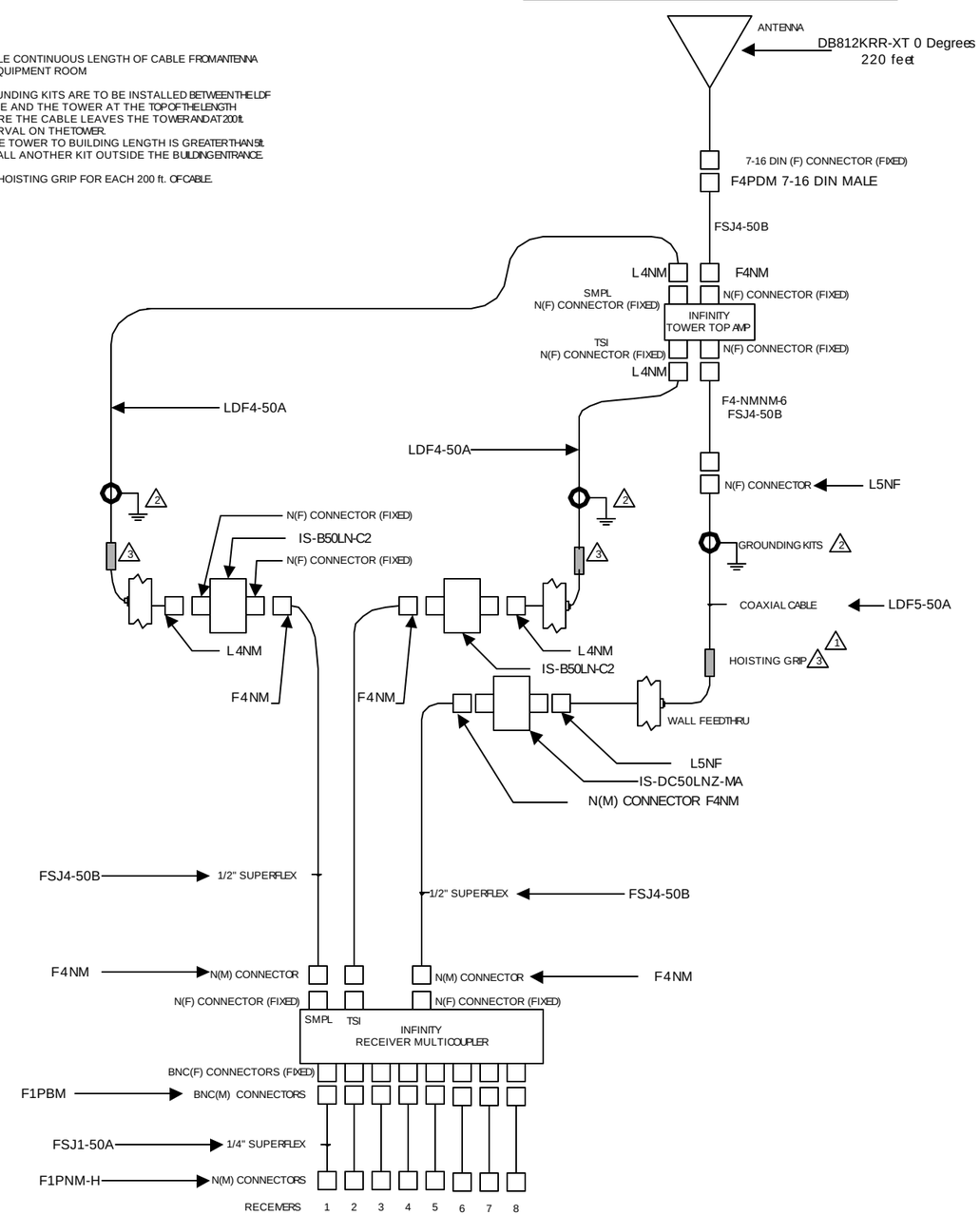

TYCO / Electronics / M/A-COM	MBP# 80219
GURNEE Antenna Assembly	
Russ Bolstad	
05/18/01	PAGE 1 OF 1
SK-80219-G-04	

ANTENNA LOCATIONS

EAST TOWER
245 ft.

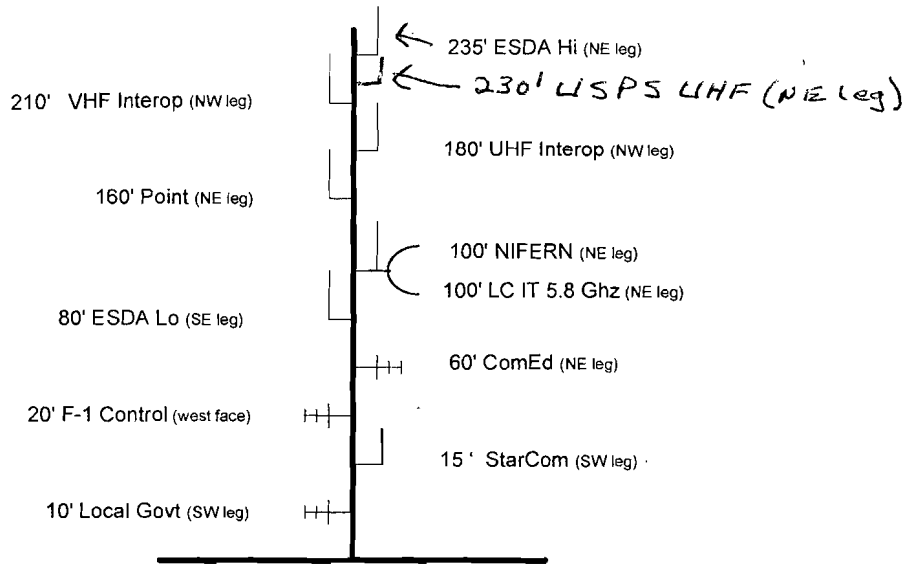

WEST TOWER
265 ft.

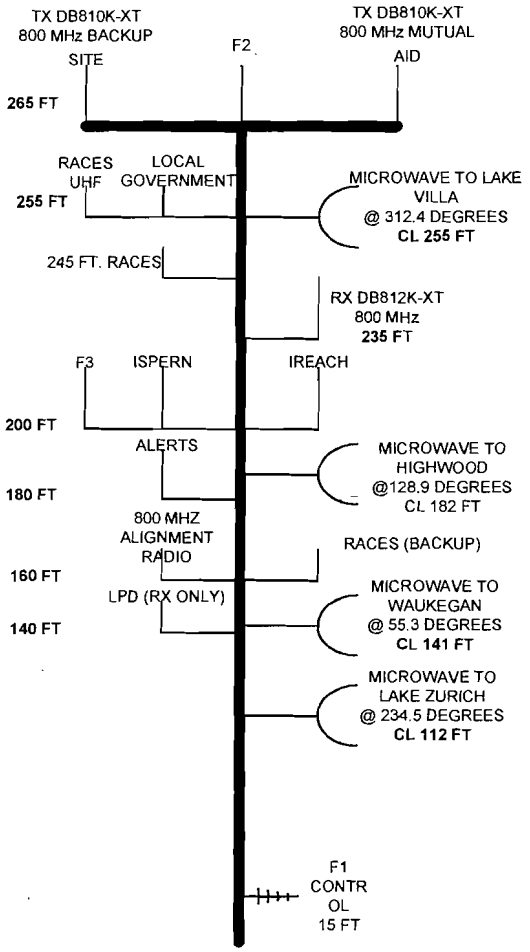

LIBERTYVILLE TOWERS2.VSD
08/29/2011 trl